2.3 Electronic Throttle Control (ETC) System

The electronic throttle control (ETC) system consists of the accelerator-pedal module, the engine control module (ECM), and the electronic throttle body. The electronic throttle body mainly consists of the throttle valve, the electric throttle-valve drive element, and the throttle-valve position sensor (TPS). The drive element is a DC servomotor, which acts on the throttle-valve shaft via a gear unit. The throttle-valve position sensor is a redundant sensor system that detects the position of the throttle valve. The sensors have opposite resistance curves so that the ECM can always cross check the signals to ensure the correct position of the throttle valve is always known.

The driver command is detected by a redundant sensor system in the accelerator-pedal module, and the signal is sent to the engine control module. The engine control module then determines the required throttle-valve position by performing calculations from data measured by sensors such as accelerator pedal position sensor, engine speed sensor and vehicle speed sensor. The actual throttle opening can be more or less in proportion to accelerator pedal position given different engine operating points.

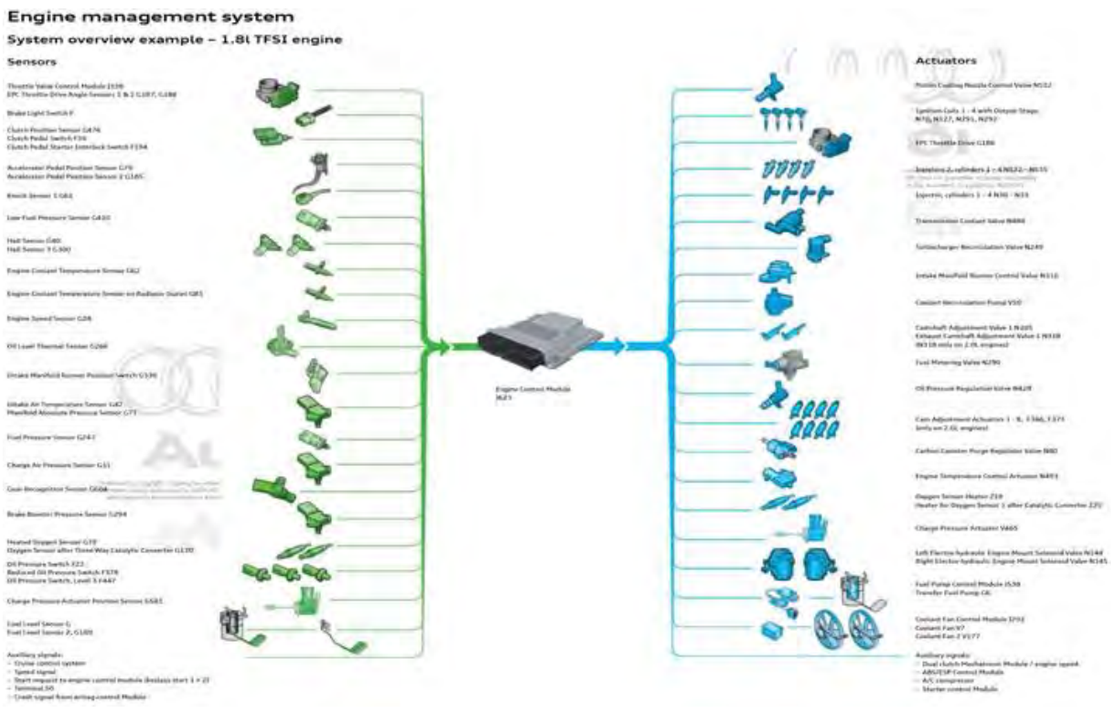

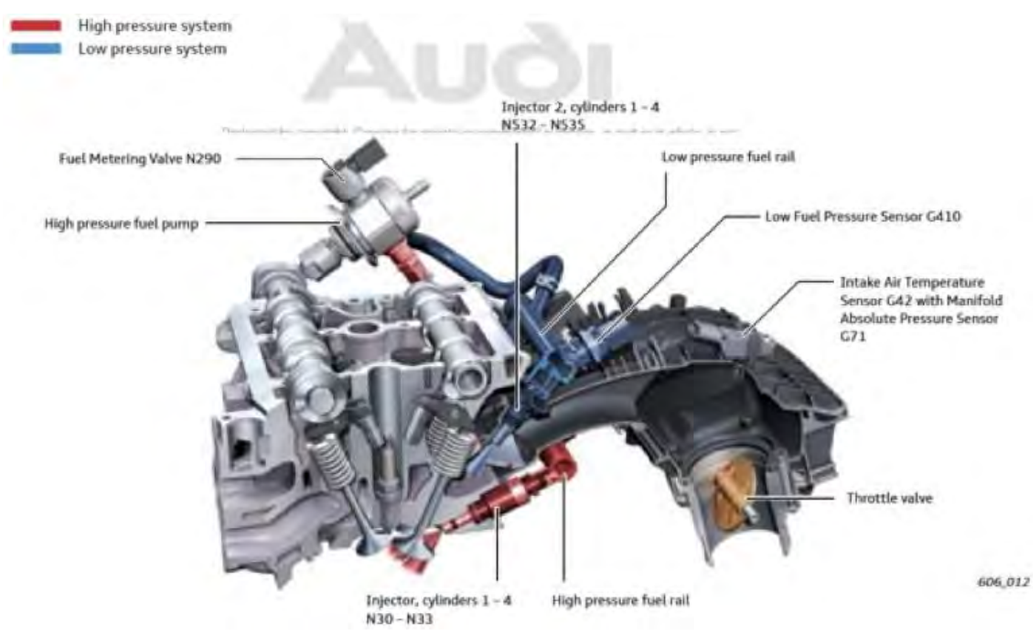

The positioning device (throttle valve) is within the Throttle Valve Control Module J338 shown above.

The Engine Control Module (ECM) controls the positioning device (throttle valve) of an internal combustion position. The positioning device (throttle valve) is within the Throttle Valve Control Module J338 shown above.

Figure 57

COUNT X – INFRINGEMENT OF U.S. PATENT NO. 7,487,761

67. The allegations set forth in the foregoing paragraphs 1 through 66 are incorporated into this Tenth Claim for Relief.

68. On February 10, 2009 U.S. Patent No. 7,487,761 ("the '761 patent"), entitled "Detection of Fuel System Problems," was duly and legally issued by the United States Patent and Trademark Office. A true and correct copy of the '761 patent is attached as Exhibit 10.

69. Plaintiff is the assignee and owner of the right, title and interest in and to the '761 patent, including the right to assert all causes of action arising under said patents and the right to any remedies for infringement of them.

70. Upon information and belief, Defendants have directly infringed at least claims 1 and 17 of the '761 patent by making, using, selling, importing and/or providing and causing to be used the 2012-2018 Tiguan, 2012-2018 Audi A3, 2012-2018 Audi A4, 2012-2018 Audi A5, 2012-2018 Audi A6, 2016-2018 Audi TT, 2015-2018 Audi S3, 2015-2018 VW Golf, 2012-2018 VW Golf GTI, 2015-2018 VW Golf R, 2015-2018 Golf Sportwagon, 2013-2018 Jetta GLI, 2014-2018 VW Jetta Sedan, 2014-2018 VW Passat, 2012-2017 WV CC, 2012-2018 VW Beetle, 2018 VW Atlas, 2015- 2018 Audi Q3, 2012-2018 Audi Q5, and 2017-2018 Porsche Macan with the EA888 engines (the "'761 patent Accused Instrumentalities").

71. In particular, claim 1 of the '761 patent recites a method for detecting failures in a fuel system for a motor vehicle, the fuel system includes a fuel pump providing fuel from a fuel tank to a fuel injector rail of an engine, a fuel pump controller is electrically connected to the fuel pump and a rail pressure sensor, the rail pressure sensor is attached to the fuel injector rail in fluid communication with fuel being provided from the fuel tank, the method comprises: monitoring an actual fuel pump parameter of the fuel pump and a fuel injector rail pressure; comparing the actual fuel pump parameter required to achieve a desired fuel injector rail pressure

to an initial fuel pump parameter to achieve the desired fuel injector rail pressure; and signaling a fuel system problem if a difference between the actual fuel pump parameter and the initial fuel pump parameter exceeds a predetermined threshold.

72. On information and belief, the ’761 patent Accused Instrumentalities infringe claim 1 of the ’761 patent. The ’761 patent Accused Instrumentalities practice a method for detecting failures in a fuel system for a motor vehicle (*Figure 58*), the fuel system includes a fuel pump providing fuel from a fuel tank to a fuel injector rail of an engine (*Figure 59*), a fuel pump controller is electrically connected to the fuel pump and a rail pressure sensor (*Figure 60*), the rail pressure sensor is attached to the fuel injector rail in fluid communication with fuel being provided from the fuel tank (*Figure 61*), the method comprises: monitoring an actual fuel pump parameter of the fuel pump and a fuel injector rail pressure (*Figure 62*); comparing the actual fuel pump parameter required to achieve a desired fuel injector rail pressure to an initial fuel pump parameter to achieve the desired fuel injector rail pressure (*Figure 63*); and signaling a fuel system problem if a difference between the actual fuel pump parameter and the initial fuel pump parameter exceeds a predetermined threshold (*Figure 64*).

DTC / Description	Monitor Strategy Description	Malfunction Criteria and Threshold Value	Secondary Parameters with Enable Conditions	Monitoring Time Length	MIL Illum.	Component Diagnostic Procedure
P0087 Fuel Rail/ System Pressure - Too Low Bank 1	Fuel System Pressure Sensor, High Pressure Side Out Of Range Low	• Deviation between reference fuel pressure setpoint and current fuel pressure > 2,999.80 kPa • Case: 1 • Deviation lambda of controller included adaption -50.00 – 50.00 % • High pressure controller output > 45 mg • Fuel pressure < 3,500.31 kPa • Case 2: • Fuel pump at max limit • Mass fuel flow setpoint < 1,389.00 mg/rev • Fuel pressure < 34,777.60 kPa	General: • Engine speed 608 – 6,816 rpm • Fuel mass setpoint 5.00 – 1,389.00 mg/rev • Time after engine start > 10.0 s • Engine warm-up not calibrated • Catalyst heating not calibrated • Full load not calibrated • Catalyst purge not calibrated • Lambda control not calibrated • Evap purge functionality diagnosis not calibrated • Fuel pressure setpoint <= 34,777.60 kPa • And • Depending on low dynamic conditions: • Fuel mass setpoint lower range > 5.00 mg/rev • For time >= 10.0 s • Fuel mass setpoint upper range < 187.17 – 229.23 mg/rev • Fuel mass setpoint gradient -1389.00...1389.00 mg/rev • For time >= 5.0 s • And • Depending on canister purge: • Canister load not calibrated [-] • Or • Evap purge valve not calibrated	• 5.0 s • Continuous	• 2 DCY	– Check the fuel pressure and delivery quantity. Refer to fuel system mechanical testing in ⇒ "3.1 Preliminary Check", page 13 and/or to appropriate repair manual. – Check the Fuel Pressure Sensor - G247- . Refer to ⇒ "3.6.17 Fuel Pressure Sensor G247, Checking", page 983 . – Check the Fuel Pressure Regulator Valve - N276- . Refer to ⇒ "3.6.16 Fuel Metering Valve N290, Checking", page 981 . – Check the Fuel Delivery Unit - GX1- / Fuel Pump Control Module - J538- . Refer to ⇒ "3.6.18 Fuel Pump Control Module J538 / Fuel Delivery Unit GX1, Checking", page 985 .

For example, as shown in the DTC chart above, the fuel system is monitored using a self-test diagnostic strategy within the ECM and when low fuel pressure is detected in two sequential driving cycles, the ECM illuminates the Malfunction Indicator Lamp (MIL).

Figure 58

Fuel system

System overview

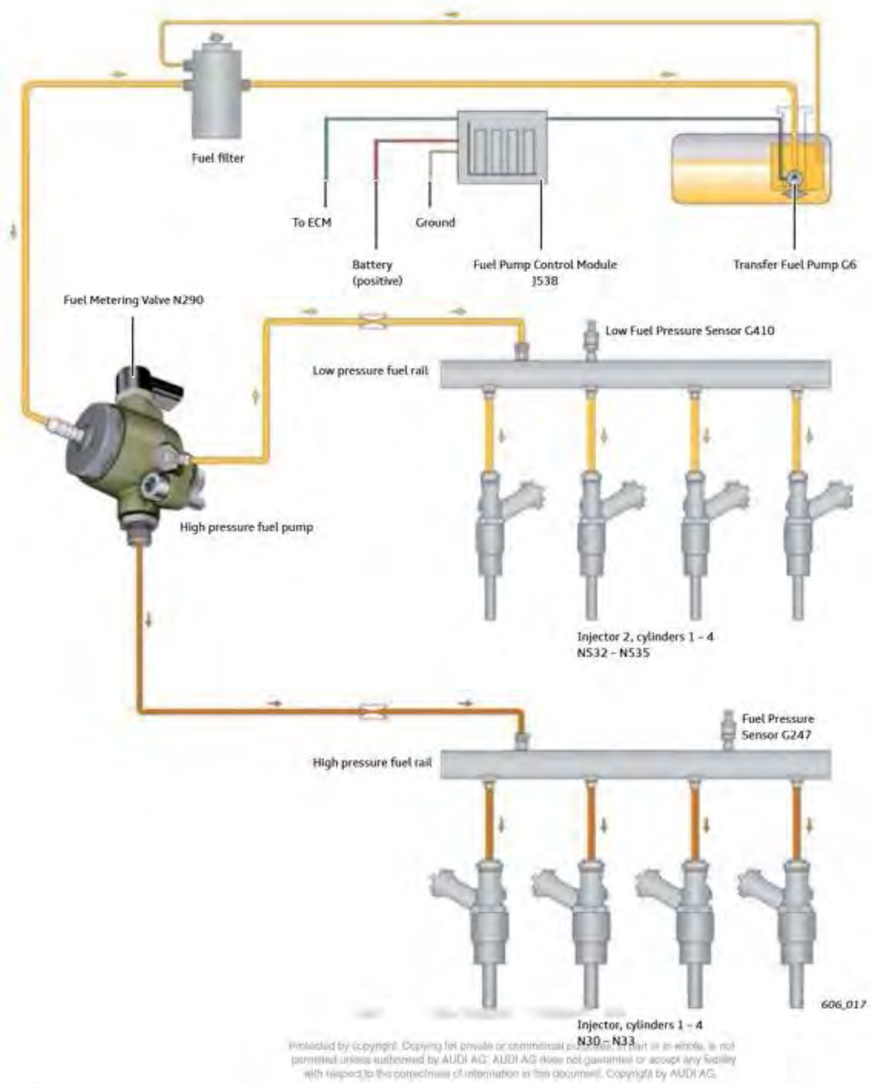

Note
Only the FSI (high pressure) system will be used on the 2015 A3 engines. The use of MPI and FSI may introduced on later Audi models.

For example, as shown in the figures above, the fuel system includes a Fuel Pump, providing fuel from a fuel tank to the fuel injector rail of an engine.

Figure 59

Fuel system

System overview

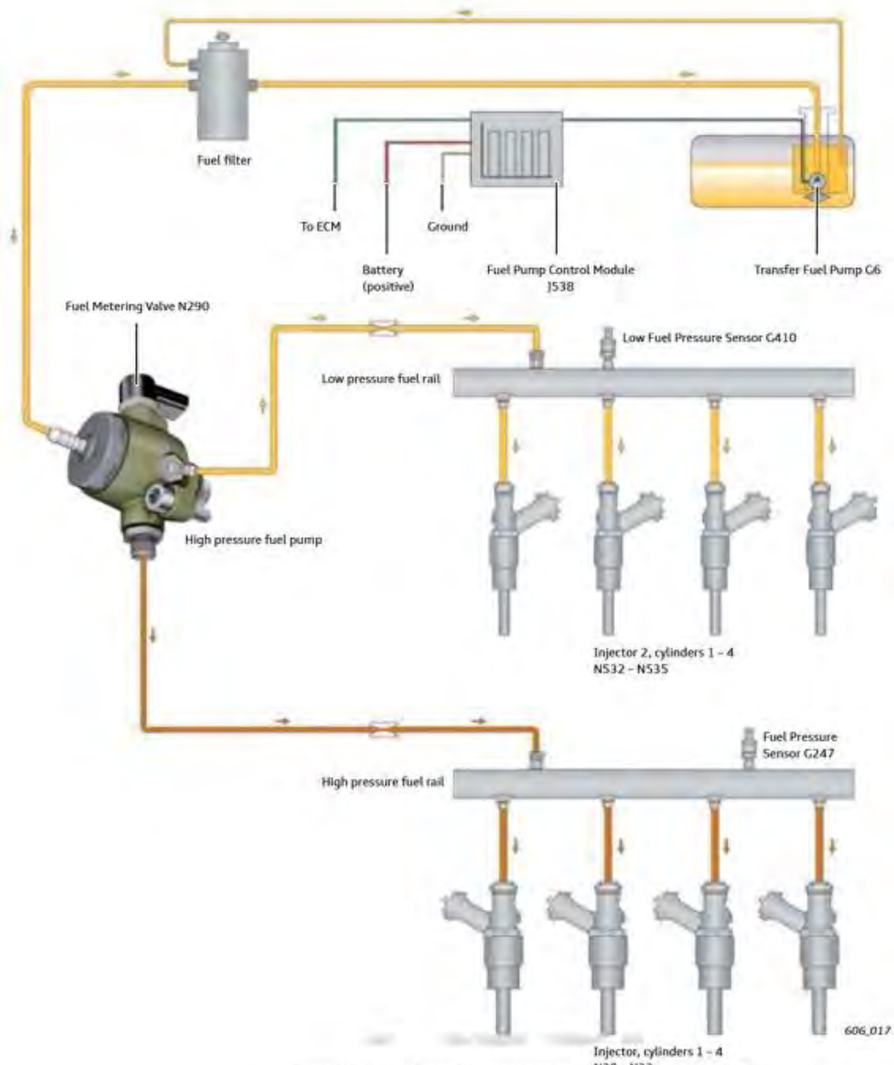

Provided by copyright. Copying for private or commercial purposes, in part or in whole, is not permitted unless authorized by AUDI AG. AUDI AG does not guarantee or accept any liability with respect to the correctness of information in this document. Copyright by AUDI AG.

Note
Only the FSI (high pressure) system will be used on the 2015 A3 engines. The use of MPI and FSI may introduced on later Audi models.

For example, as depicted above the fuel pump controller (Powertrain Control Module (PCM)) is electrically connected to the fuel pump.

2015 Audi TT Quattro Coupe (8J3) L4-2.0L Turbo (CETA)
Vehicle » Powertrain Management » Diagrams » Electrical Diagrams » Diagram 61/15 (Tracks 183-196)

DIAGRAM 61/15 (TRACKS 183-196)

IMPORTANT NOTE:
This manufacturer uses "Track" style wiring diagrams.
For information on how to use these diagrams effectively, please refer to Diagram Information and Instructions. See: Diagrams\Diagram Information and Instructions

Camshaft position sensor, Knock sensor **1**, Fuel pressure sensor, **Intake manifold runner position sensor**, Engine control module

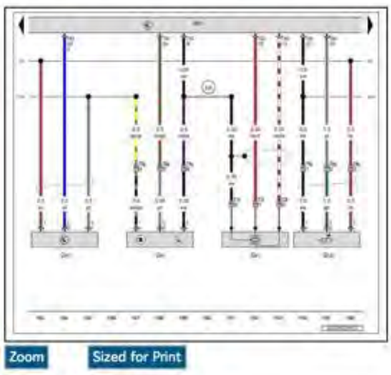

Zoom Sized for Print

ws = white
sw = black
ro = red
br = brown
gn = green
bl = blue
gr = grey
li = lilac
ge = yellow
or = orange
rs = pink

G40 - Camshaft position sensor See: Computers and Control Systems\Locations\Engine Management System
G61 - Knock sensor 1 See: Computers and Control Systems\Locations\Engine Management System
G247 - Fuel pressure sensor See: Computers and Control Systems\Locations\Engine Management System
G336 - Intake manifold runner position sensor See: Computers and Control Systems\Locations\Engine Management System
J623 - Engine control module See: Locations\Components
T3f - 3-pin connector, green
T6p - 6-pin connector, on the engine, front
T60 - 60-pin connector See: Computers and Control Systems\Engine Control Module\Locations
(220) - Sensor ground connection (in engine wiring harness)
(316) - Sensor ground connection 2 (in engine wiring harness)
(D141) - Connection 5V (in engine pre-wiring harness)
(D174) - Connection 5V (in engine pre-wiring harness) 2

Previous See: Diagram 61/14 (Tracks 169-182)

Next See: Diagram 61/16 (Tracks 197-210)

© 2018 ALLDATA LLC. All rights reserved. Terms and Conditions

For example, as depicted above, the PCM is electrically connected to the fuel (rail) pressure sensor.

Figure 60

Fuel system

System overview

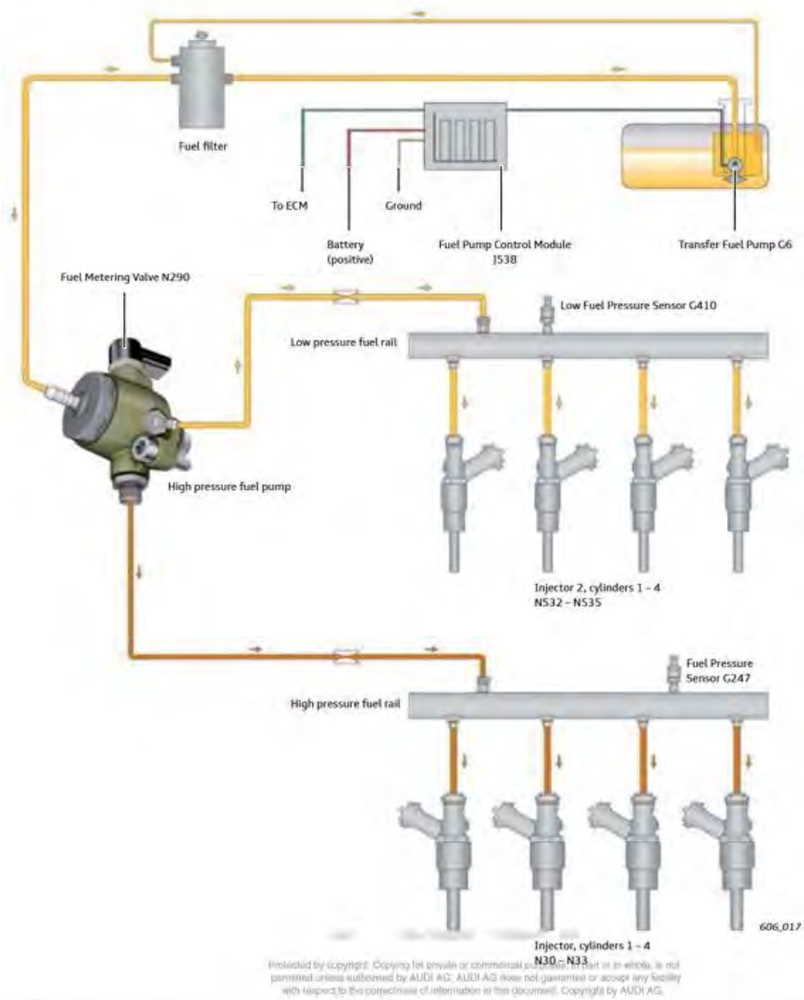

Note
Only the FSI (high pressure) system will be used on the 2015 A3 engines. The use of MPI and FSI may introduced on later Audi models.

For example, as depicted in the images above, the fuel (rail) pressure sensor is attached to the fuel (injector) rail in fluid communication with fuel being provided from the fuel tank.

Figure 61

Fuel system

System overview

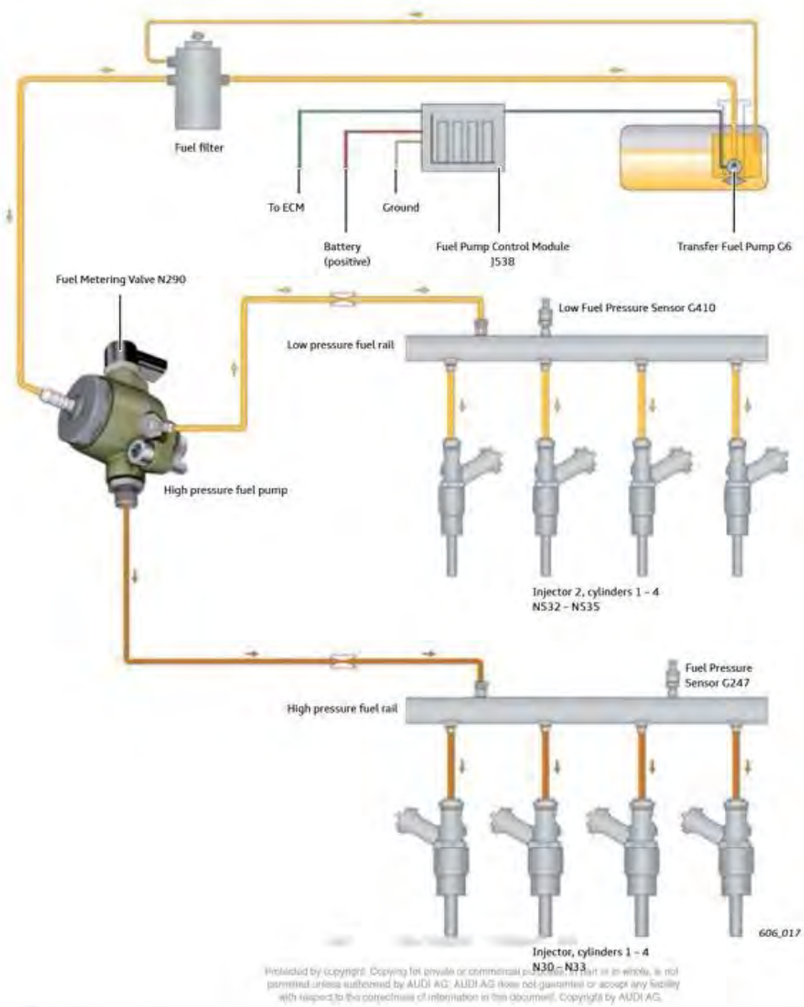

Provided by copyright. Copying for private or commercial purposes, in part or in whole, is not permitted unless authorised by AUDI AG. AUDI AG does not guarantee or accept any liability with respect to the correctness of information in this document. Copyright by AUDI AG.

Note
Only the FSI (high pressure) system will be used on the 2015 A3 engines. The use of MPI and FSI may introduced on later Audi models.

2015 Audi TT Quattro Coupe (8J3) L4-2.0L Turbo (CETA)
Vehicle » Powertrain Management » Diagrams » Electrical Diagrams » Diagram 61/13 (Tracks 155-168)

DIAGRAM 61/13 (TRACKS 155-168)

IMPORTANT NOTE:
This manufacturer uses "Track" style wiring diagrams.
For information on how to use these diagrams effectively, please refer to Diagram Information and Instructions. See: Diagrams\Diagram Information and Instructions

Engine control module, **Fuel pressure regulator valve,** Leak detection pump

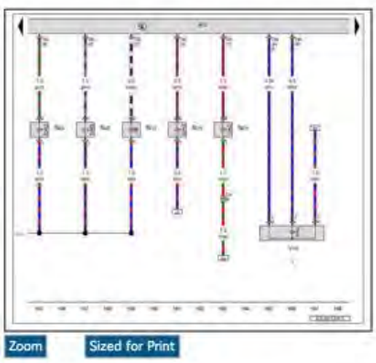

Zoom Sized for Print

ws = white
sw = black
ro = red
br = brown
gn = green
bl = blue
gr = grey
li = lilac
ge = yellow
or = orange
rs = pink

J623 - Engine control module See: Locations\Components
N112 - Secondary air injection solenoid valve See: Computers and Control Systems\Locations\3.2L Gasoline BUB, CBRA Overviews
N249 - Turbocharger recirculation valve See: Computers and Control Systems\Locations\Engine Management System
N276 - Fuel pressure regulator valve See: Computers and Control Systems\Locations\Engine Management System
N316 - Intake manifold runner control valve See: Computers and Control Systems\Locations\Engine Management System
N428 - Oil pressure regulation valve See: Computers and Control Systems\Locations\Engine Management System
T14 - 14-pin connector, in the engine compartment, left front
T60 - 60-pin connector See: Computers and Control Systems\Engine Control Module\Locations
T94 - 94-pin connector See: Computers and Control Systems\Engine Control Module\Locations
V144 - Leak detection pump See: Emission Control Systems\Evaporative Emissions System\Locations
(D102) - Connection 2 (in engine compartment wiring harness)
***** - Omitted as a running change
***2** - Only for vehicles with a fuel system diagnostic pump

Previous See: Diagram 61/12 (Tracks 141-154)

Next See: Diagram 61/14 (Tracks 169-182)

© 2018 ALLDATA LLC. All rights reserved. Terms and Conditions

DTC / Description	Monitor Strategy Description	Malfunction Criteria and Threshold Value	Secondary Parameters with Enable Conditions	Monitoring Time Length	MIL Illum.	Component Diagnostic Procedure
P0087 Fuel Rail/ System Pressure - Too Low Bank 1	Fuel System Pressure Sensor, High Pressure Side Out Of Range Low	• Deviation between reference fuel pressure setpoint and current fuel pressure > 2,999.80 kPa • Case: 1 • Deviation lambda of controller included adaption -50.00 – 50.00 % • High pressure controller output > 45 mg • Fuel pressure < 3,500.31 kPa • Case 2: • Fuel pump at max limit • Mass fuel flow setpoint < 1,389.00 mg/rev • Fuel pressure < 34,777.60 kPa	General: • Engine speed 608 – 6,816 rpm • Fuel mass setpoint 5.00 – 1,389.00 mg/rev • Time after engine start > 10.0 s • Engine warm-up not calibrated • Catalyst heating not calibrated • Full load not calibrated • Catalyst purge not calibrated • Lambda control not calibrated • Evap purge functionality diagnosis not calibrated • Fuel pressure setpoint <= 34,777.60 kPa • And • Depending on low dynamic conditions: • Fuel mass setpoint lower range > 5.00 mg/rev • For time >= 10.0 s • Fuel mass setpoint upper range < 187.17 – 229.23 mg/rev • Fuel mass setpoint gradient -1389.00...1389.00 mg/rev • For time >= 5.0 s • And • Depending on canister purge: • Canister load not calibrated [-] • Or • Evap purge valve not calibrated	• 5.0 s • Continuous	• 2 DCY	– Check the fuel pressure and delivery quantity. Refer to fuel system mechanical testing in ⇒ "3.1 Preliminary Check", page 13 and/or to appropriate repair manual. – Check the Fuel Pressure Sensor - G247- . Refer to ⇒ "3.6.17 Fuel Pressure Sensor G247 , Checking", page 983 . – Check the Fuel Pressure Regulator Valve - N276- . Refer to ⇒ "3.6.16 Fuel Metering Valve N290 , Checking", page 981 . – Check the Fuel Delivery Unit - GX1- / Fuel Pump Control Module - J538- . Refer to ⇒ "3.6.18 Fuel Pump Control Module J538 / Fuel Delivery Unit GX1 , Checking", page 985 .

S3, TT 2015 ►
Generic Scan Tool - Edition 12.2017

DTC / Description	Monitor Strategy Description	Malfunction Criteria and Threshold Value	Secondary Parameters with Enable Conditions	Monitoring Time Length	MIL Illum.	Component Diagnostic Procedure
	Fuel Rail Pressure (FRP) rationality check low	• Deviation lambda of controller included adaption -50.00 – 50.00% • And • High pressure controller output > 45 mg • And • Deviation between fuel pressure setpoint and current fuel pressure > 2999.80 kPa • And • Fuel pressure >= 3500.31 kPa	• General: • Engine speed 608 – 6816 rpm • Fuel mass setpoint 5.00 – 1389.00 g/rev • Time after engine start > 10.0 s • Engine warm-up not calibrated • Catalyst heating not calibrated • Full load not calibrated • Catalyst purge not calibrated • Lambda control not calibrated • Evap purge functionality diagnosis not calibrated • Fuel pressure setpoint gradient <= 34777.60 kPa • And • Depending on low dynamic conditions: • Fuel mass setpoint lower range > 5.00 mg/rev • For time >= 10.0 s • Fuel mass setpoint upper range < 187.17 – 229.23 mg/rev • Fuel mass setpoint gradient -1389.00 – 1389.00 mg/rev • For time >= 5.0 s • And • Depending on canister purge: • Canister load not calibrated [-] • Or • Evap purge valve not calibrated			

622 Rep. Gr. ST – Generic Scan Tool

For example, as depicted below the fuel pump with the fuel pressure regulator valve control the fuel flow flowing into the injectors in accordance with the ECM signal. The ECM calculates the fuel amount to be injected based on actual fuel pump parameter (Deviation between reference fuel pressure setpoint and current fuel pressure > 2,999.80 kPa, which is calculated based on various engine conditions) and monitors the rail pressure sensor (fuel injector rail pressure: Fuel pressure < 3,500.31 kPa).

Figure 62

DTC / Description	Monitor Strategy Description	Malfunction Criteria and Threshold Value	Secondary Parameters with Enable Conditions	Monitoring Time Length	MIL Illum.	Component Diagnostic Procedure
P0087 Fuel Rail/ System Pressure - Too Low Bank 1	Fuel System Pressure Sensor, High Pressure Side Out Of Range Low	• Deviation between reference fuel pressure setpoint and current fuel pressure > 2,999.80 kPa • Case: 1 • Deviation lambda of controller included adaption -50.00 – 50.00 % • High pressure controller output > 45 mg • Fuel pressure < 3,500.31 kPa • Case 2: • Fuel pump at max limit • Mass fuel flow setpoint < 1,389.00 mg/rev • Fuel pressure < 34,777.60 kPa	General: • Engine speed 608 – 6,816 rpm • Fuel mass setpoint 5.00 – 1,389.00 mg/rev • Time after engine start > 10.0 s • Engine warm-up not calibrated • Catalyst heating not calibrated • Full load not calibrated • Catalyst purge not calibrated • Lambda control not calibrated • Evap purge functionality diagnosis not calibrated • Fuel pressure setpoint <= 34,777.60 kPa • And • Depending on low dynamic conditions: • Fuel mass setpoint lower range > 5.00 mg/rev • For time >= 10.0 s • Fuel mass setpoint upper range < 187.17 – 229.23 mg/rev • Fuel mass setpoint gradient -1389.00...1389.00 mg/rev • For time >= 5.0 s • And • Depending on canister purge: • Canister load not calibrated [-] • Or • Evap purge valve not calibrated	• 5.0 s • Continuous	• 2 DCY	– Check the fuel pressure and delivery quantity. Refer to fuel system mechanical testing in ⇒ "3.1 Preliminary Check", page 13 and/or to appropriate repair manual. – Check the Fuel Pressure Sensor - G247- . Refer to ⇒ "3.6.17 Fuel Pressure Sensor G247, Checking", page 983 . – Check the Fuel Pressure Regulator Valve - N276- . Refer to ⇒ "3.6.16 Fuel Metering Valve N290 , Checking", page 981 . – Check the Fuel Delivery Unit - GX1- / Fuel Pump Control Module - J538- . Refer to ⇒ "3.6.18 Fuel Pump Control Module J538 / Fuel Delivery Unit GX1, Checking", page 985 .

S3, TT 2015 ►
Generic Scan Tool - Edition 12.2017

DTC / Description	Monitor Strategy Description	Malfunction Criteria and Threshold Value	Secondary Parameters with Enable Conditions	Monitoring Time Length	MIL Illum.	Component Diagnostic Procedure
	Fuel Rail Pressure (FRP) rationality check low	• Deviation lambda of controller included adaption -50.00 – 50.00% • And • High pressure controller output > 45 mg • And • Deviation between fuel pressure setpoint and current fuel pressure > 2999.80 kPa • And • Fuel pressure >= 3500.31 kPa	• General: • Engine speed 608 – 6816 rpm • Fuel mass setpoint 5.00 – 1389.00 g/rev • Time after engine start > 10.0 s • Engine warm-up not calibrated • Catalyst heating not calibrated • Full load not calibrated • Catalyst purge not calibrated • Lambda control not calibrated • Evap purge functionality diagnosis not calibrated • Fuel pressure setpoint gradient <= 34777.60 kPa • And • Depending on low dynamic conditions: • Fuel mass setpoint lower range > 5.00 mg/rev • For time >= 10.0 s • Fuel mass setpoint upper range < 187.17 – 229.23 mg/rev • Fuel mass setpoint gradient -1389.00 – 1389.00 mg/rev • For time >= 5.0 s • And • Depending on canister purge: • Canister load not calibrated [-] • Or • Evap purge valve not calibrated			

622 Rep. Gr. 97 – Generic Scan Tool

For example, as shown above, the actual fuel pump parameter required to achieve a desired fuel injector rail pressure (Fuel pump at max limit) is the ECM signal shown below (Deviation between reference fuel pressure setpoint and current fuel pressure > 2,999.80 kPa).

Figure 63

As depicted below a fuel system problem is signaled (DTC P0087) if there is a difference between the ECM signal (actual fuel pump parameter of: current fuel pressure) and the initial fuel pump parameter (fuel pressure setpoint) when it exceeds a predetermined threshold (> 2,999.80 kPa).

DTC / Description	Monitor Strategy Description	Malfunction Criteria and Threshold Value	Secondary Parameters with Enable Conditions	Monitoring Time Length	MIL Illum.	Component Diagnostic Procedure
P0087 Fuel Rail/ System Pressure - Too Low Bank 1	Fuel System Pressure Sensor, High Pressure Side Out Of Range Low	• Deviation between reference fuel pressure setpoint and current fuel pressure > 2,999.80 kPa • Case: 1 • Deviation lambda of controller included adaption -50.00 – 50.00 % • High pressure controller output > 45 mg • Fuel pressure < 3,500.31 kPa • Case 2: • Fuel pump at max limit • Mass fuel flow setpoint < 1,389.00 mg/rev • Fuel pressure < 34,777.60 kPa	General: • Engine speed 608 – 6,816 rpm • Fuel mass setpoint 5.00 – 1,389.00 mg/rev • Time after engine start > 10.0 s • Engine warm-up not calibrated • Catalyst heating not calibrated • Full load not calibrated • Catalyst purge not calibrated • Lambda control not calibrated • Evap purge functionality diagnosis not calibrated • Fuel pressure setpoint <= 34,777.60 kPa • And • Depending on low dynamic conditions: • Fuel mass setpoint lower range > 5.00 mg/rev • For time >= 10.0 s • Fuel mass setpoint upper range < 187.17 – 229.23 mg/rev • Fuel mass setpoint gradient -1389.00...1389.00 mg/rev • For time >= 5.0 s • And • Depending on canister purge: • Canister load not calibrated [-] • Or • Evap purge valve not calibrated	• 5.0 s • Continuous	• 2 DCY	– Check the fuel pressure and delivery quantity. Refer to fuel system mechanical testing in ⇒ "3.1 Preliminary Check", page 13 and/or to appropriate repair manual. – Check the Fuel Pressure Sensor - G247- . Refer to ⇒ "3.6.17 Fuel Pressure Sensor G247, Checking", page 983 . – Check the Fuel Pressure Regulator Valve - N276- . Refer to ⇒ "3.6.16 Fuel Metering Valve N290 , Checking", page 981 . – Check the Fuel Delivery Unit - GX1- / Fuel Pump Control Module - J538- . Refer to ⇒ "3.6.18 Fuel Pump Control Module J538 / Fuel Delivery Unit GX1, Checking", page 985 .

S3, TT 2015 ►
Generic Scan Tool - Edition 12.2017

DTC / Description	Monitor Strategy Description	Malfunction Criteria and Threshold Value	Secondary Parameters with Enable Conditions	Monitoring Time Length	MIL Illum.	Component Diagnostic Procedure
	Fuel Rail Pressure (FRP) rationality check low	• Deviation lambda of controller included adaption -50.00 – 50.00% • And • High pressure controller output > 45 mg • And • Deviation between fuel pressure setpoint and current fuel pressure > 2999.80 kPa • And • Fuel pressure >= 3500.31 kPa	• General: • Engine speed 608 – 6816 rpm • Fuel mass setpoint 5.00 – 1389.00 g/rev • Time after engine start > 10.0 s • Engine warm-up not calibrated • Catalyst heating not calibrated • Full load not calibrated • Catalyst purge not calibrated • Lambda control not calibrated • Evap purge functionality diagnosis not calibrated • Fuel pressure setpoint gradient <= 34777.60 kPa • And • Depending on low dynamic conditions: • Fuel mass setpoint lower range > 5.00 mg/rev • For time >= 10.0 s • Fuel mass setpoint upper range < 187.17 – 229.23 mg/rev • Fuel mass setpoint gradient -1389.00 – 1389.00 mg/rev • For time >= 5.0 s • And • Depending on canister purge: • Canister load not calibrated [-] • Or • Evap purge valve not calibrated			

622 Rep. Gr. ST – Generic Scan Tool

As depicted below a fuel system problem is signaled (DTC P0087) if there is a difference between the ECM signal (actual fuel pump parameter of: current fuel pressure) and the initial fuel pump parameter (fuel pressure setpoint) when it exceeds a predetermined threshold (> 2,999.80 kPa).

"Deviation between reference fuel pressure setpoint and current fuel pressure > 2,999.80 kPa"
Based upon the totality of the foregoing evidence, and based further upon information and belief, the '761 patent Accused Instrumentalities include "a method for detecting failures in a fuel system for a motor vehicle, the fuel system includes a fuel pump providing fuel from a fuel tank to a fuel injector rail of an engine, a fuel pump controller is electrically connected to the fuel

pump and a rail pressure sensor, the rail pressure sensor is attached to the fuel injector rail in fluid communication with fuel being provided from the fuel tank, the method comprises: monitoring an actual fuel pump parameter of the fuel pump and a fuel injector rail pressure; comparing the actual fuel pump parameter required to achieve a desired fuel injector rail pressure to an initial fuel pump parameter to achieve the desired fuel injector rail pressure; and signaling a fuel system problem if a difference between the actual fuel pump parameter and the initial fuel pump parameter exceeds a predetermined threshold."

Figure 64

73. Claim 17 of the '761 patent recites a device for detecting failures in a fuel system of a motor vehicle, the fuel system includes a fuel pump providing fuel from a fuel tank to a fuel injector rail of an engine, a rail pressure sensor is attached to the fuel injector rail in fluid communication with the fuel being provided from the fuel tank, the device comprises: a fuel pump controller being electrically connected to the fuel pump and the rail pressure sensor, the fuel pump controller being configured to monitor an actual fuel pump parameter of the fuel pump and an actual fuel injector rail pressure measured by the rail pressure sensor and to compare the actual fuel pump parameter required to achieve a desired fuel injector rail pressure to an initial fuel pump parameter and to signal a fuel system problem if a difference between the actual fuel pump parameter and the initial fuel pump parameter exceeds a predetermined threshold.

74. On information and belief, the '761 patent Accused Instrumentalities infringe claim 17 of the '761 patent. The '761 patent Accused Instrumentalities comprise a device for detecting failures in a fuel system of a motor vehicle (*Figure 65*), the fuel system includes a fuel pump providing fuel from a fuel tank to a fuel injector rail of an engine (*Figure 65*), a rail pressure sensor is attached to the fuel injector rail in fluid communication with the fuel being provided from the fuel tank (*Figure 66*), the device comprises: a fuel pump controller being electrically connected to the fuel pump and the rail pressure sensor (*Figure 66*), the fuel pump controller being configured to monitor an actual fuel pump parameter of the fuel pump and an

actual fuel injector rail pressure measured by the rail pressure sensor and to compare the actual fuel pump parameter required to achieve a desired fuel injector rail pressure to an initial fuel pump parameter and to signal a fuel system problem if a difference between the actual fuel pump parameter and the initial fuel pump parameter exceeds a predetermined threshold (*Figure 66*).

Fuel system

System overview

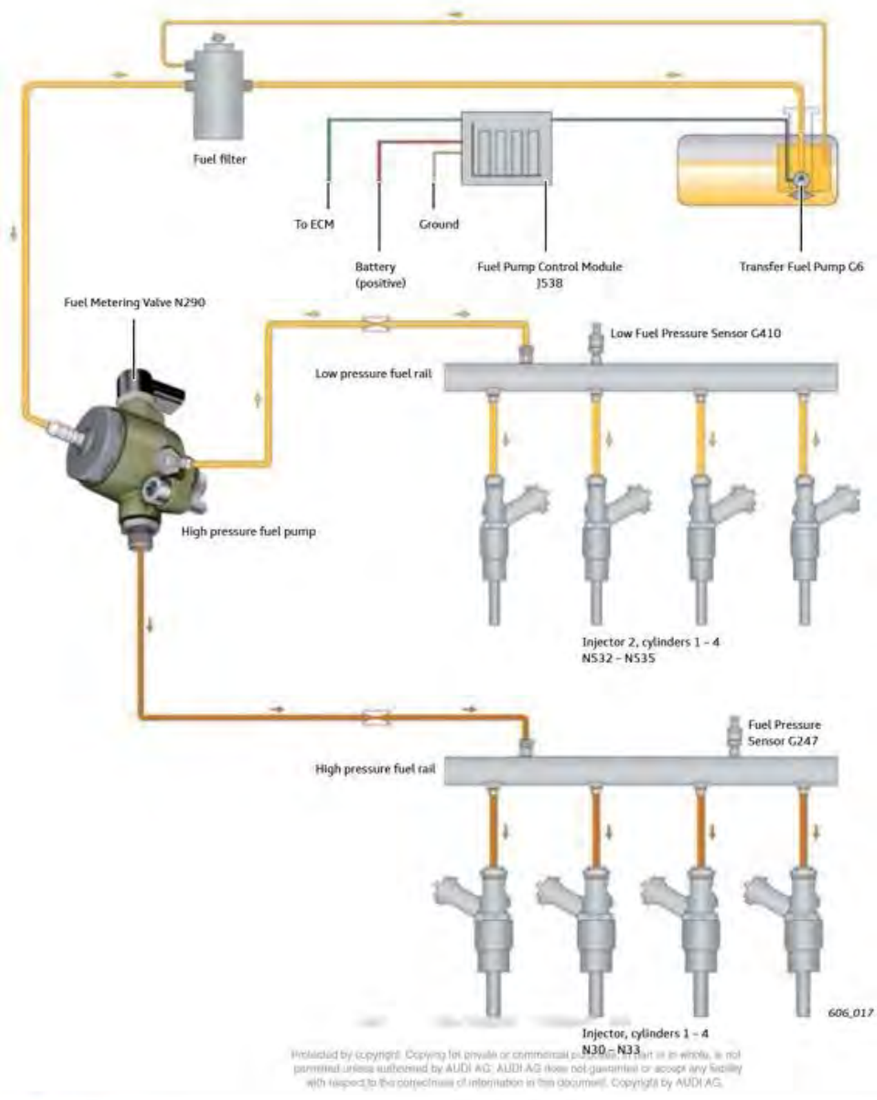

Provided by copyright. Copying for private or commercial purposes, in part or in whole, is not permitted unless authorised by AUDI AG. AUDI AG does not guarantee or accept any liability with respect to the correctness of information in this document. Copyright by AUDI AG.

Note
Only the FSI (high pressure) system will be used on the 2015 A3 engines. The use of MPI and FSI may introduced on later Audi models.

As shown above, the fuel system includes a fuel system includes a fuel pump providing fuel from a fuel tank to a fuel injector rail of an engine, a rail pressure sensor is attached to the fuel injector rail in fluid communication with the fuel being provided from the fuel tank.

Figure 65

As depicted below the fuel pump controller (Powertrain Control Module (PCM)) is electrically connected to the fuel pump and the PCM is electrically connected to the fuel (rail) pressure sensor.

As shown below in DTC P0087, the fuel pump controller, (PCM) is configured to monitor an actual fuel pump parameter (Fuel pump at max limit) and an actual fuel injector rail pressure (current fuel pressure) by the rail pressure sensor (G247) and compares the actual fuel pump parameter required to achieve a desired fuel injector rail pressure to an initial fuel pump parameter (fuel mass setpoint) and to signal a fuel system problem (DTC P0087) if a difference between the actual fuel pump parameter and the initial fuel pump parameter exceeds a predetermined threshold (deviation between fuel pressure setpoint and actual fuel pressure or mass fuel flow setpoint and actual mass fuel flow).

Based upon the totality of the foregoing evidence, and based further upon information and belief, the ’761 patent Accused Instrumentalities include “a device for detecting failures in a fuel system of a motor vehicle, the fuel system includes a fuel pump providing fuel from a fuel tank to a fuel injector rail of an engine, a rail pressure sensor is attached to the fuel injector rail in fluid communication with the fuel being provided from the fuel tank, the device comprises: a fuel pump controller being electrically connected to the fuel pump and the rail pressure sensor, the fuel pump controller being configured to monitor an actual fuel pump parameter of the fuel pump and an actual fuel injector rail pressure measured by the rail pressure sensor and to compare the actual fuel pump parameter required to achieve a desired fuel injector rail pressure to an initial fuel pump parameter and to signal a fuel system problem if a difference between the actual fuel pump parameter and the initial fuel pump parameter exceeds a predetermined threshold.”

2015 Audi TT Quattro Coupe (8J3) L4-2.0L Turbo (CETA)
Vehicle » Powertrain Management » Diagrams » Electrical Diagrams » Diagram 61/15 (Tracks 183-196)

DIAGRAM 61/15 (TRACKS 183-196)

IMPORTANT NOTE:
This manufacturer uses "Track" style wiring diagrams.
For information on how to use these diagrams effectively, please refer to Diagram Information and Instructions. See: Diagrams\Diagram Information and Instructions

Camshaft position sensor, Knock sensor **1**, Fuel pressure sensor, **Intake manifold runner position sensor,** Engine control module

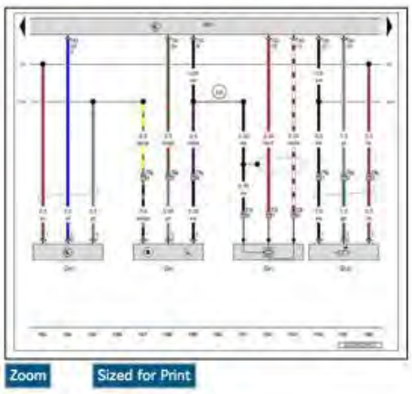

Zoom Sized for Print

ws = white
sw = black
ro = red
br = brown
gn = green
bl = blue
gr = grey
li = lilac
ge = yellow
or = orange
rs = pink

G40 - Camshaft position sensor See: Computers and Control Systems\Locations\Engine Management System
G61 - Knock sensor 1 See: Computers and Control Systems\Locations\Engine Management System
G247 - Fuel pressure sensor See: Computers and Control Systems\Locations\Engine Management System
G336 - Intake manifold runner position sensor See: Computers and Control Systems\Locations\Engine Management System
J623 - Engine control module See: Locations\Components
T3f - 3-pin connector, green
T6p - 6-pin connector, on the engine, front
T60 - 60-pin connector See: Computers and Control Systems\Engine Control Module\Locations
(220) - Sensor ground connection (in engine wiring harness)
(316) - Sensor ground connection 2 (in engine wiring harness)
(D141) - Connection 5V (in engine pre-wiring harness)
(D174) - Connection 5V (in engine pre-wiring harness) 2

Previous See: Diagram 61/14 (Tracks 169-182)

Next See: Diagram 61/16 (Tracks 197-210)

© 2018 ALLDATA LLC. All rights reserved. Terms and Conditions

2015 Audi TT Quattro Coupe (8J3) L4-2.0L Turbo (CETA)
Vehicle » Powertrain Management » Fuel Delivery and Air Induction » Fuel Pressure Regulator » Testing and Inspection » Fuel Pressure Regulator Valve (N276), Checking

FUEL PRESSURE REGULATOR VALVE (N276), CHECKING

Fuel Pressure Regulator Valve (N276), Checking

Function

The Engine Control Module (J623) regulates Fuel Pressure Regulator Valve (N276) directly at the High Pressure Fuel Pump to control the low pressure valve inside the High Pressure Fuel Pump.

Fuel system

System overview

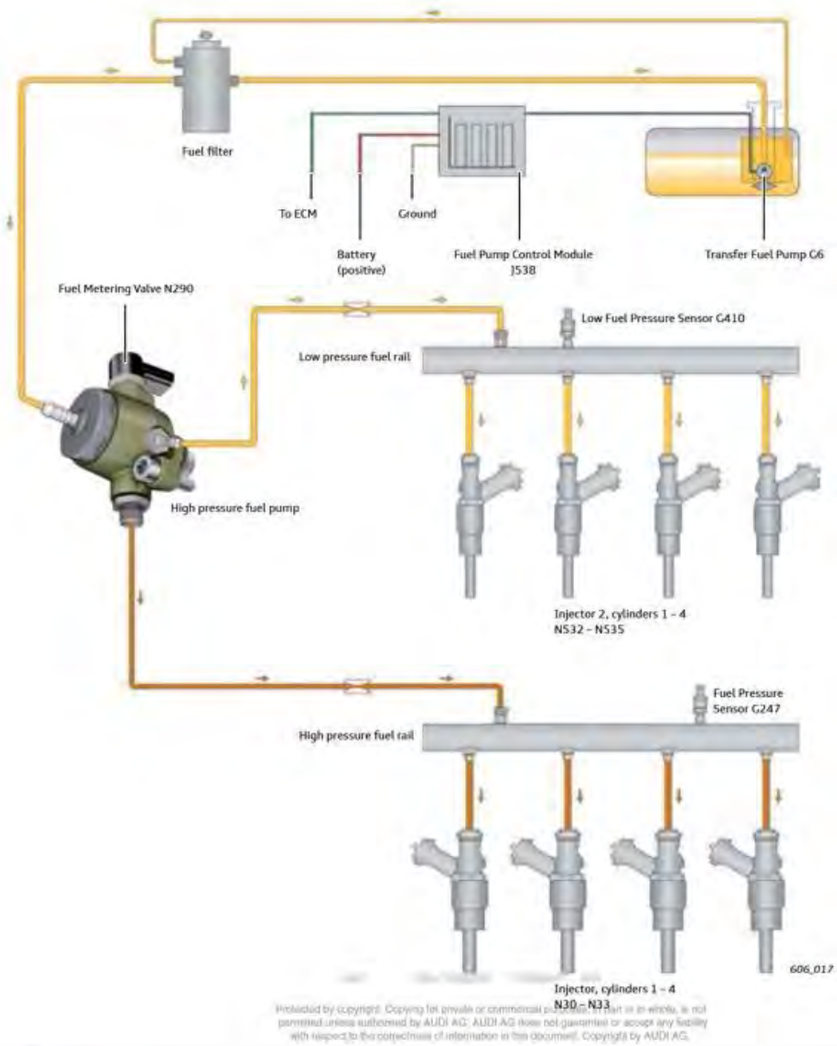

Protected by copyright. Copying for private or commercial purposes, in part or in whole, is not permitted unless authorised by AUDI AG. AUDI AG does not guarantee or accept any liability with respect to the correctness of information in this document. Copyright by AUDI AG.

Note
Only the FSI (high pressure) system will be used on the 2015 A3 engines. The use of MPI and FSI may introduced on later Audi models.

S3, TT 2015 ➤ Audi
Generic Scan Tool - Edition 12.2017

DTC / Description	Monitor Strategy Description	Malfunction Criteria and Threshold Value	Secondary Parameters with Enable Conditions	Monitoring Time Length	MIL Illum.	Component Diagnostic Procedure
P0087 Fuel Rail/ System Pressure - Too Low Bank 1	Fuel System Pressure Sensor, High Pressure Side Out Of Range Low	• Deviation between reference fuel pressure setpoint and current fuel pressure > 2,999.80 kPa • Case: 1 • Deviation lambda of controller included adaption -50.00 – 50.00 % • High pressure controller output > 45 mg • Fuel pressure < 3,500.31 kPa • Case 2: • Fuel pump at max limit • Mass fuel flow setpoint < 1,389.00 mg/rev • Fuel pressure < 34,777.60 kPa	General: • Engine speed 608 – 6,816 rpm • Fuel mass setpoint 5.00 – 1,389.00 mg/rev • Time after engine start > 10.0 s • Engine warm-up not calibrated • Catalyst heating not calibrated • Full load not calibrated • Catalyst purge not calibrated • Lambda control not calibrated • Evap purge functionality diagnosis not calibrated • Fuel pressure setpoint <= 34,777.60 kPa • And • Depending on low dynamic conditions: • Fuel mass setpoint lower range > 5.00 mg/rev • For time >= 10.0 s • Fuel mass setpoint upper range < 187.17 – 229.23 mg/rev • Fuel mass setpoint gradient -1389.00...1389.00 mg/rev • For time >= 5.0 s • And • Depending on canister purge: • Canister load not calibrated [-] • Or • Evap purge valve not calibrated	• 5.0 s • Continuous	• 2 DCY	– Check the fuel pressure and delivery quantity. Refer to fuel system mechanical testing in ⇒ "3.1 Preliminary Check", page 13 and/or to appropriate repair manual. – Check the Fuel Pressure Sensor - G247- . Refer to ⇒ "3.6.17 Fuel Pressure Sensor G247, Checking", page 983 . – Check the Fuel Pressure Regulator Valve - N276- . Refer to ⇒ "3.6.16 Fuel Metering Valve N290 , Checking", page 981 . – Check the Fuel Delivery Unit - GX1- / Fuel Pump Control Module - J538- . Refer to ⇒ "3.6.18 Fuel Pump Control Module J538 / Fuel Delivery Unit GX1, Checking", page 985 .

3. Diagnosis and Testing 621

Figure 66

COUNT XI – INFRINGEMENT OF U.S. PATENT NO. 6,644,115

75. The allegations set forth in the foregoing paragraphs 1 through 74 are incorporated into this Eleventh Claim for Relief.

76. On November 11, 2003 U.S. Patent No. 6,644,115 ("the '115 patent"), entitled "Method and Device for Indicating Liquid Volume in a Tank," was duly and legally issued by

the United States Patent and Trademark Office. A true and correct copy of the ’115 patent is attached as Exhibit 11.

77. Plaintiff is the assignee and owner of the right, title and interest in and to the ’115 patent, including the right to assert all causes of action arising under said patents and the right to any remedies for infringement of them.

78. Upon information and belief, Defendants have directly infringed at least claims 1, 2, 3, and 7 of the ’115 patent by making, using, selling, importing and/or providing and causing to be used the 2012-2018 Tiguan, 2012-2018 Audi A3, 2012-2018 Audi A4, 2012-2018 Audi A5, 2012-2018 Audi A6, 2016-2018 Audi TT, 2015-2018 Audi S3, 2015-2018 VW Golf, 2012-2018 VW Golf GTI, 2015-2018 VW Golf R, 2015-2018 Golf Sportwagon, 2013-2018 Jetta GLI, 2014-2018 VW Jetta Sedan, 2014-2018 VW Passat, 2012-2017 WV CC, 2012-2018 VW Beetle, 2018 VW Atlas, 2015- 2018 Audi Q3, 2012-2018 Audi Q5, and 2017-2018 Porsche Macan with the EA888 engines (the “’115 patent Accused Instrumentalities”).

79. In particular, claim 1 of the ’115 patent recites a system for determining a level of a liquid present in a storage container in an automobile, the system comprising: a liquid level sensor for determining a preliminary liquid level of the liquid stored in the storage container; a vehicle speed sensor for determining the automobile's speed; a transmission gear selection sensor for determining a transmission gear position of a transmission of the automobile; and a processor for receiving input signals from the liquid level sensor, the vehicle speed sensor and the transmission gear selection sensor for modifying the preliminary liquid level to arrive at a final liquid level indication of the liquid present in the storage container when the automobile's speed is equal to zero, the automobile transmission gear is in park position, and the preliminary liquid level exceeds a predetermined threshold.

80. On information and belief, the ’115 patent Accused Instrumentalities infringe claim 1 of the ’115 patent. The ’115 patent Accused Instrumentalities comprise a system for determining a level of a liquid present in a storage container in an automobile (*Figure 67*), the system comprising: a liquid level sensor for determining a preliminary liquid level of the liquid stored in the storage container (*Figure 68*); a vehicle speed sensor for determining the automobile's speed (*Figure 69*); a transmission gear selection sensor for determining a transmission gear position of a transmission of the automobile (*Figure 70*); and a processor for receiving input signals from the liquid level sensor (*Figure 71*), the vehicle speed sensor and the transmission gear selection sensor (*Figure 71*) for modifying the preliminary liquid level to arrive at a final liquid level indication of the liquid present in the storage container when the automobile's speed is equal to zero (*Figure 71*), the automobile transmission gear is in park position, and the preliminary liquid level exceeds a predetermined threshold (*Figure 71*).

The ’115 patent Accused Instrumentalities comprise a Controller Area Network (CAN) system which sends and receives data to and from various microcontrollers in the system. For example, the Fuel Level Sensor (FLS) measures the fuel level in the fuel tank and provides information to the Powertrain Control Module (PCM) and the brake fluid level warning switch measures the brake fluid level and provides information to the anti-lock braking system (ABS) and the Electronic Stability Control System (ESC).

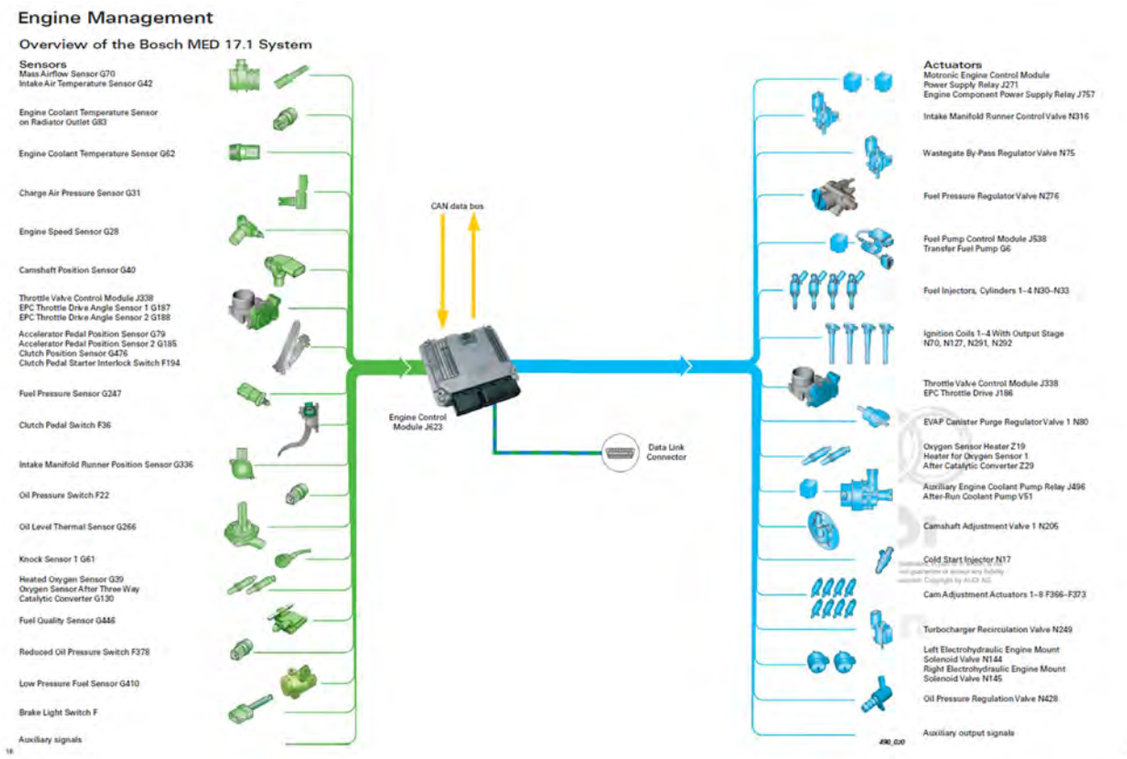

For example, the ’115 patent Accused Instrumentalities comprise a fuel system which includes a fuel level sensor for determining a level of fuel present in the fuel tank.

Fuel Delivery Module

The following components of the fuel delivery module have been modified for bioethanol fuel:

- Guide rods
- Insulation for the electrical wiring
- Fuel Level Sensor G
- Flange
- Corrugated tubes

Protected by copyright. Copying for private or commercial purposes is not permitted unless authorised by AUDI AG. AUDI AG does not guarantee or assume liability with respect to the correctness of information in this document.

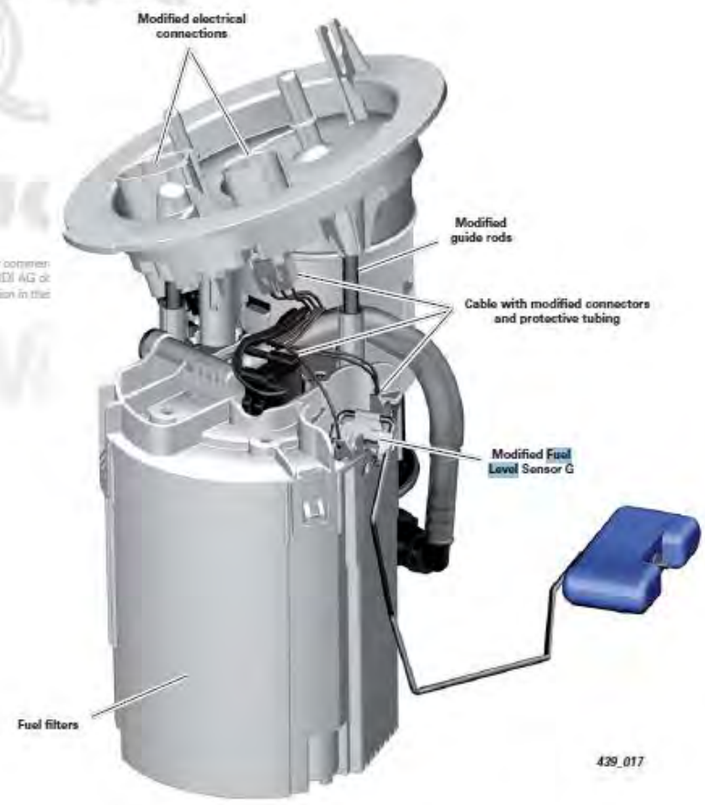

The following components of Transfer Fuel Pump G6 have also been modified for bioethanol fuel:

- Pump housing
- Pump stage
- Connector cover

12

Figure 67

Fuel Delivery Module

The following components of the fuel delivery module have been modified for bioethanol fuel:

- Guide rods
- Insulation for the electrical wiring
- Fuel Level Sensor G
- Flange
- Corrugated tubes

Protected by copyright. Copying for private or commercial purposes is not permitted unless authorised by AUDI AG. AUDI AG does not guarantee or accept any liability with respect to the correctness of information in this document.

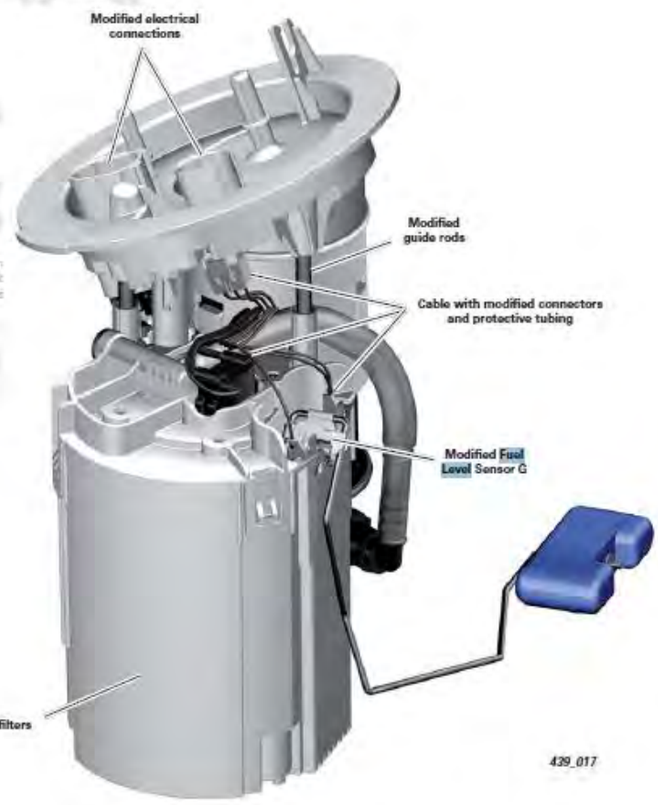

The following components of Transfer Fuel Pump G6 have also been modified for bioethanol fuel:

- Pump housing
- Pump stage
- Connector cover

12

As demonstrated in the exemplary images above, the ’115 patent Accused Instrumentalities include a Fuel Level Sensor (FLS), which is a liquid level sensor. The FLS determines the preliminary liquid level of the fuel (liquid) stored in the storage container (fuel tank).

Figure 68

1 - Right Rear ABS Wheel Speed Sensor - G44-

- ❑ Removing and installing. Refer to ⇒ "4.2 Overview - Rear Axle Speed Sensor", page 37 .
- ❑ Can be tested in "Guided Fault Finding" with the Vehicle Diagnostic Tester

2 - Left Rear ABS Wheel Speed Sensor - G46-

3 - ESP Sensor Unit - G419-

- ❑ 9 Nm
- ❑ Component location: under the left seat
- ❑ Removing and installing. Refer to ⇒ "4.5 ESP Sensor Unit G419 , Removing and Installing", page 42 .
- ❑ Combined transverse acceleration sensor G200, rotation rate sensor G202 and longitudinal acceleration sensor G251.
- ❑ Can be tested in "Guided Fault Finding" with the Vehicle Diagnostic Tester
- ❑ Observe installation instructions
- ❑ Check the arrow in the

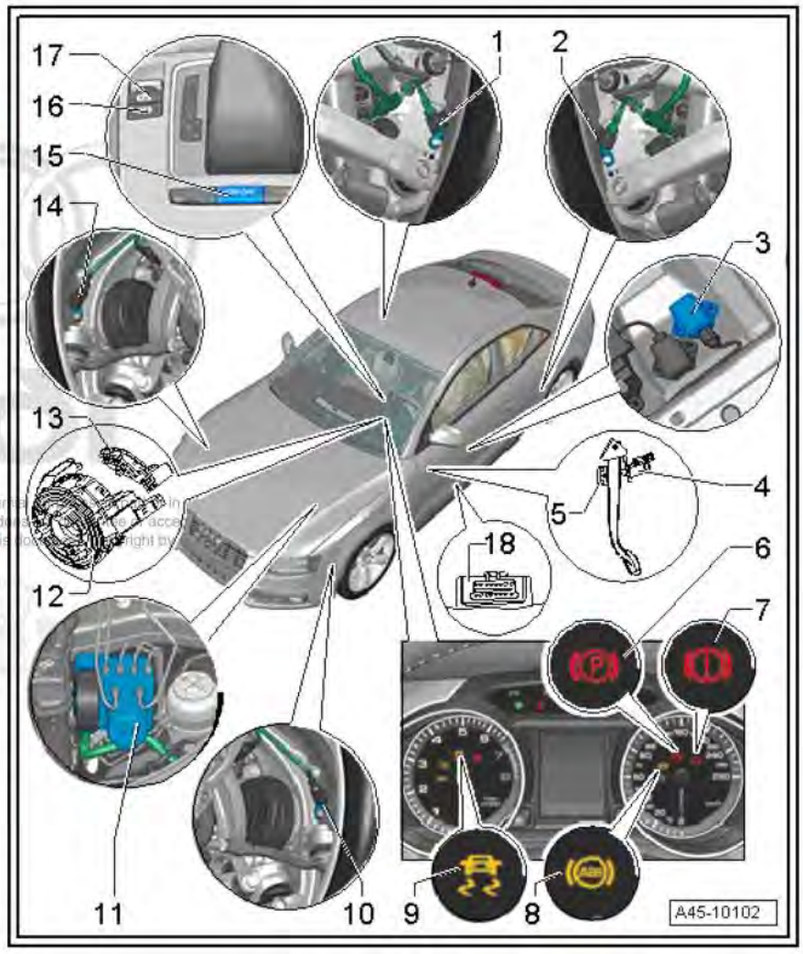

The ESC Module shares the vehicle speed information with the PCM.

Audi A4 2008 ➤ , Audi A5 Cabriolet 2009 ➤ , Audi A5 Coupé 2008 ➤
Brake System - Edition 03.2017

3 Control Module and Hydraulic Unit

⇒ "3.1 Overview - Control Module and Hydraulic Unit", page 30

⇒ "3.2 ABS Control Module J104 / ABS Hydraulic Unit N55 , Removing and Installing", page 31

3.1 Overview - Control Module and Hydraulic Unit

1 - ABS Hydraulic Unit - N55- with ABS Control Module - J104-

- Installed location: in the front left engine compartment.
- Removing and Installing. Refer to ⇒ "3.2 ABS Control Module J104 / ABS Hydraulic Unit N55 , Removing and Installing", page 31 .
- The hydraulic control unit is comprised of the ABS hydraulic unit N55 with integrated brake pressure sensor G201 and the ABS control module J104.
- The components must not be separated from each other.
- Do not disconnect the connector before successfully completing OBD.

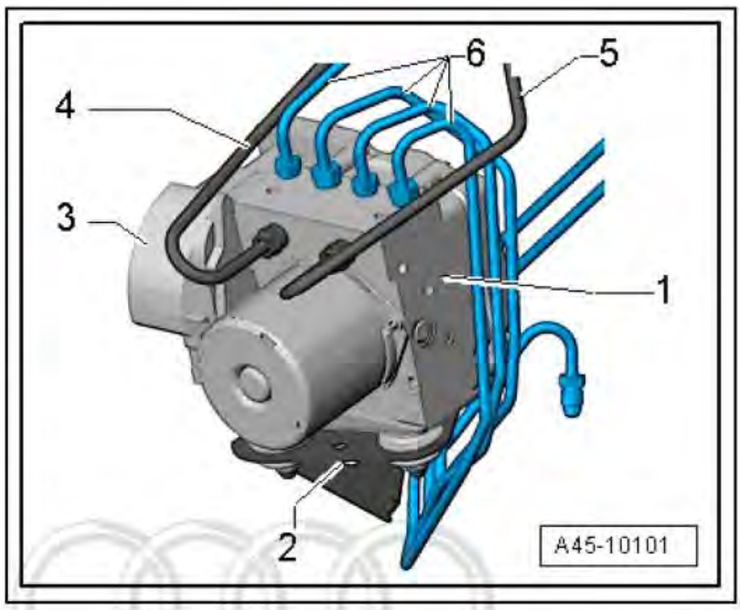

- Switch the ignition off before disconnecting the connector.
- The brake pressure sensor G201 is integrated into the ABS hydraulic unit N55 and cannot be replaced.

Caution

The ABS hydraulic unit N55 and ABS control module J104 must not be separated from each other.

Protected by copyright. Copying for private or commercial purposes, in part or in whole, is not permitted unless authorised by AUDI AG. AUDI AG does not guarantee or accept any liability with respect to the correctness of information in this document. Copyright by AUDI AG.

The Wheel Speed Sensor (WSS) generates a signal having a waveform with a frequency proportional to the speed of the vehicle. The signal generated by the WSS informs the ABS Control Module if the vehicle is moving or not and indicates the velocity of the vehicle. Then, the ABS Control Module informs ECM of this information. The ECM uses this information to control fuel injection, ignition timing, transmission shift points and torque converter clutch scheduling. The WSS signal is also used to detect rough road conditions.

As demonstrated in the exemplary images above, the ’115 patent Accused Instrumentalities include an ABS Wheel Speed Sensor (WSS) for determining the automobile’s speed. The ABS

Wheel Speed Sensor (WSS) generates a signal having a waveform with a frequency proportional to the speed of the vehicle. The signal generated by the ABS WSS informs the ESC Module not only if the vehicle speed is low or high but also if the vehicle is or is not moving. Then, ESC Module informs the PCM of this information. The PCM uses this information to control fuel injection, ignition timing, transmission shift points and torque converter clutch scheduling. The WSS signal is also used to detect rough road conditions.

Figure 69

As demonstrated in the exemplary images below, the inhibitor switch (transmission gear selection sensor) determines the transmission gear position of the transmission of the ’115 patent Accused Instrumentalities.

Audi A4 Component Locations No. 861 / 5

1.4.1 Transmission Control Module

- Location: Transmission Control Module (TCM) -J217- is on the back end of transmission, secured directly to hydraulic control module.

The following components are integrated in Transmission Control Module (TCM) -J217- :

1 - Solenoid Valve 1 -N88-

2 - Automatic Transmission Pressure Regulating Valve 2 -N216-

3 - Automatic Transmission Pressure Regulating Valve 1 -N215-

4 - Transmission Input Speed (RPM) Sensor -G182- and Transmission Input Speed (RPM) Sensor 2 -G612-

5 - Automatic Transmission Hydraulic Pressure Sensor 1 -G193-

6 - Multi-Function Transmission Range (TR) Switch -F125-

7 - Automatic Transmission Hydraulic Pressure Sensor 2 -G194-

8 - Transmission Output Speed (RPM) Sensor -G195-

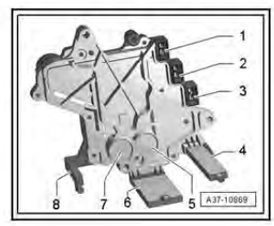

P070500	Transm.Range Sensor "A" Circ.(PRNDL Inp.) Malfunction
P070600	Transm.Range Sensor "A" Circ. Range/Performance
P070700	Transm.Range Sensor "A" Circ. Low Input
P070800	Transm.Range Sensor "A" Circ. High Input
P071000	Transm.Fluid Temp.Sensor Circ. Malfunction
P071100	Transm.Fluid Temp.Sensor Circ. Range/Performance
P071200	Transm.Fluid Temp.Sensor Circ. Low Input
P071300	Transm.Fluid Temp.Sensor Circ. High Input
P071400	Transm.Fluid Temp.Sensor Circ. Intermittent
P071500	Input Turbine/Speed Sensor "A" Circ.
P071600	Input Turbine/Speed Sensor "A"Circ. Range/Performance
P071700	Input Turbine/Speed Sensor "A"Circ. No Signal
P072000	Output Speed Sensor Circ. Malfunction
P072100	Output Speed Sensor Circ. Range/Performance
P072200	Output Speed Sensor Circ. No Signal
P072500	Engine Speed Input Ciruit
P072600	Engine Speed Inp.Circ. Range/Performance
P072700	Engine Speed Inp.Circ. No Signal
P072900	Gear 6 Incorrect Ratio
P072B00	Stuck in Reverse
P072C00	Stuck in Gear 1

Page 11 of 58 12/12/2011

Figure 70

The ECM receives input signals from the Fuel Level Sensor (liquid level sensor) and Fuel Level Sensor 2 via the Instrument Cluster Control Module through the CAN bus.

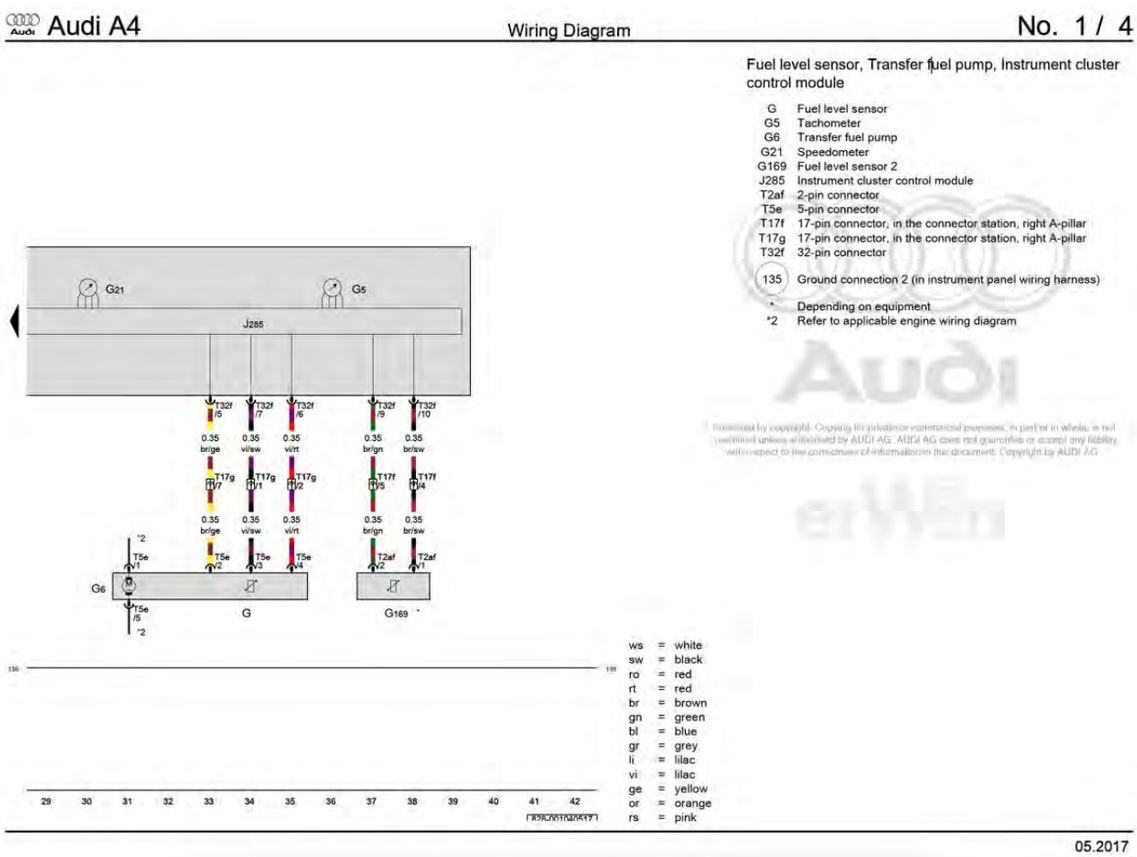

The ’115 patent Accused Instrumentalities comprise a processor for receiving input signals from the vehicle speed sensor, as exemplified by the CAN in the circuit diagram below.

1 - Right Rear ABS Wheel Speed Sensor - G44-

- ❑ Removing and installing. Refer to ⇒ "4.2 Overview - Rear Axle Speed Sensor", page 37 .
- ❑ Can be tested in "Guided Fault Finding" with the Vehicle Diagnostic Tester

2 - Left Rear ABS Wheel Speed Sensor - G46-

3 - ESP Sensor Unit - G419-

- ❑ 9 Nm
- ❑ Component location: under the left seat
- ❑ Removing and installing. Refer to ⇒ "4.5 ESP Sensor Unit G419 , Removing and Installing", page 42 .
- ❑ Combined transverse acceleration sensor G200, rotation rate sensor G202 and longitudinal acceleration sensor G251.
- ❑ Can be tested in "Guided Fault Finding" with the Vehicle Diagnostic Tester
- ❑ Observe installation instructions
- ❑ Check the arrow in the

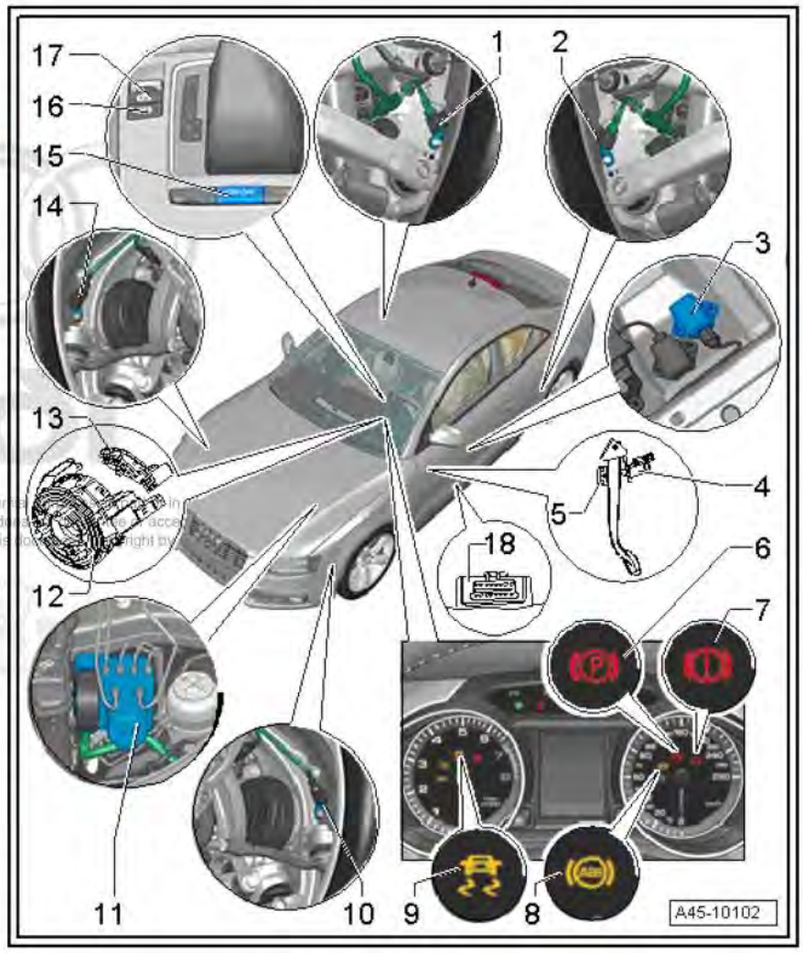

The '115 patent Accused Instrumentalities comprise a processor receiving input signals from the transmission gear selection sensor as exemplified by the figure below which demonstrates the data received from the transmission gear selection sensor.

Audi A4 Component Locations No. 861 / 5

1.4.1 Transmission Control Module

- Location: Transmission Control Module (TCM) -J217- is on the back end of transmission, secured directly to hydraulic control module.

The following components are integrated in Transmission Control Module (TCM) -J217- :

1 - Solenoid Valve 1 -N88-

2 - Automatic Transmission Pressure Regulating Valve 2 -N216-

3 - Automatic Transmission Pressure Regulating Valve 1 -N215-

4 - Transmission Input Speed (RPM) Sensor -G182- and Transmission Input Speed (RPM) Sensor 2 -G612-

5 - Automatic Transmission Hydraulic Pressure Sensor 1 -G193-

6 - Multi-Function Transmission Range (TR) Switch -F125-

7 - Automatic Transmission Hydraulic Pressure Sensor 2 -G194-

8 - Transmission Output Speed (RPM) Sensor -G195-

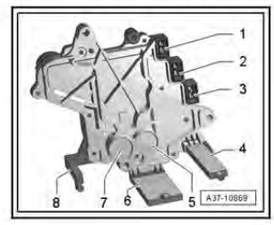

For example, as illustrated above (first picture), the Controller Area Network (CAN) systems include an ECM and other elements that collectively function as a processor for processing the data associated with the preliminary and final liquid levels communicated by the fuel level sensor, and for modifying the preliminary fuel level when the automobile's speed is zero, the automobile transmission gear is in the park position, and when the preliminary liquid level exceeds a predetermined threshold.. The fuel level sensor is in the fuel storage tank, which is the storage container.

Based upon the totality of the foregoing evidence, and based further upon information and belief, the '115 patent Accused Instrumentalities include "a system for determining a level of a liquid present in a storage container in an automobile, the system comprising: a liquid level sensor for determining a preliminary liquid level of the liquid stored in the storage container; a vehicle speed sensor for determining the automobile's speed; a transmission gear selection sensor for determining a transmission gear position of a transmission of the automobile; and a processor for receiving input signals from the liquid level sensor, the vehicle speed sensor and the transmission gear selection sensor for modifying the preliminary liquid level to arrive at a final liquid level indication of the liquid present in the storage container when the automobile's speed is equal to zero, the automobile transmission gear is in park position, and the preliminary liquid level exceeds a predetermined threshold."

Figure 71

81. Claim 2 of the '115 patent recites the system of claim 1, wherein the processor takes a plurality of liquid level readings using the liquid level sensor and then calculates an average to arrive at a preliminary liquid level.

82. On information and belief, the '115 patent Accused Instrumentalities infringe claim 2 of the '115 patent. The '115 patent Accused Instrumentalities comprise, the system of

claim 1, wherein the processor takes a plurality of liquid level readings using the liquid level sensor and then calculates an average to arrive at a preliminary liquid level (*Figure 72*).

As shown below, the PCM continuously monitors the fuel level and generates a filtered fuel level (average) fuel level.

DTC / Description	Monitor Strategy Description	Malfunction Criteria and Threshold Value	Secondary Parameters with Enable Conditions	Monitoring Time Length	MIL Illum.	Component Diagnostic Procedure
P0452 EVAP System Pressure Sensor/ Switch Circuit Low	NVLD Switch Short To Ground	• Signal voltage < 0.24 V	• Case 1: • Engine running • Case 2: • Ignition off • NVLD (EVAP-System) diagnostic mode active	• 0.5 s • Continuous	• 2 DCY	– Check the Fuel Tank Leak Detection Control Module - J909- / Fuel Tank Pressure Sensor - G400- . Refer to ⇒ "3.6.19 Fuel Tank Leak Detection Control Module J909 / Fuel Tank Pressure Sensor G400 , Checking", page 987 .
P0453 EVAP System Pressure Sensor/ Switch Circuit High	NVLD Switch Short To Battery Plus	• Signal voltage > 3.0 V	• Case 1: • Engine running • Case 2: • Ignition off • NVLD (EVAP-System) diagnostic mode active	• 0.5 s • Continuous	• 2 DCY	– Check the Fuel Tank Leak Detection Control Module - J909- / Fuel Tank Pressure Sensor - G400- . Refer to ⇒ "3.6.19 Fuel Tank Leak Detection Control Module J909 / Fuel Tank Pressure Sensor G400 , Checking", page 987 .
P0456 EVAP System Leak Detected (Very Small Leak)	EVAP System Small Leak Functional Check	• Natural vacuum leak detection (NVLD) switch position = open	• Ignition off • Fuel level < 85.10 % • Fuel temperature drop >= 6 K • For time > 1 h • AAT >= 4° C • Barometric pressure > 73.00 kPa • Diff. barometric pressure @ stop and barometric pressure @ start < 0.65 kPa • Time since ignition off > 90 [min] ; < 600 min	• 0.1 s • Once / DCY	• 2 DCY	– Check the EVAP System visually for any leaking hoses or damage to components. – Check the EVAP Canister Purge Regulator Valve 1 - N80- . Refer to ⇒ "3.6.13 EVAP Canister Purge Regulator Valve 1 N80 , Checking", page 975 . – Check the Fuel Tank Leak Detection Control Module - J909- / Fuel Tank Pressure Sensor - G400- . Refer to ⇒ "3.6.19 Fuel Tank Leak Detection Control Module J909 / Fuel Tank Pressure Sensor G400 , Checking", page 987 .

Cockpit overview

The short-term memory collects driving information from the time the ignition is switched on until it is switched off. If you continue driving within two hours after switching the ignition off, the new values are included when calculating the current trip information.

Unlike the short-term memory, the long-term memory is not erased automatically. You can select the time period for evaluating trip information yourself.

Fuel consumption

The current fuel consumption can be shown using a bar graph ⇨ *fig. 14*. The average consumption stored in the short-term memory is also displayed. If the bars are green or the gray tone on the bars changes (depending on the equipment), your vehicle is saving fuel by the following function:

– **Recuperation**: electrical energy can be stored in the vehicle battery when the vehicle is coasting or driving downhill. The bar will move toward ⇨/⇨.

Tips

The date, time of day and time and date format can be set in the Infotainment system ⇨ *page 251*.

Energy consumers

Fig. 15 Instrument cluster: energy consumers

In the **Energy consumers** view, the other equipment that is currently affecting fuel consumption is listed in the first tab (on-board computer). The display shows up to three energy consumers Ⓑ ⇨ *fig. 15*. The equipment using the most power is listed first. If more than three items using power are switched on, the equipment that is currently using the most power is displayed.

A gauge Ⓐ also shows the current total consumption of all other consumers.

Radio

Applies to: vehicles with multifunction steering wheel

▸ Press the MODE button on the multifunction steering wheel repeatedly until the Radio/Media tab is displayed.

Applies to: vehicles with multifunction steering wheel plus

▸ Press the button repeatedly until the Radio/Media tab is displayed.

▸ Press the left control button ⇨ *page 14*.

Depending on vehicle equipment, the following functions may be available in the driver information system.

– **Selecting the frequency band**: select and confirm a frequency band.

– **Selecting a station from the station list**: select and confirm a radio station.

– **Selecting a station from the presets list**: select and confirm **Presets** and then a radio station.

– **Opening a media source**: select and confirm **Switch to media**.

Additional settings

– Select: right control button > *desired entry*.

Depending on the function selected, the following additional settings may be possible:

– **"Now Playing" screen**: see ⇨ *page 229*.

Media

Requirement: a media drive must contain audio/video files ⇨ *page 231*.

Applies to: vehicles with multifunction steering wheel

▸ Press the MODE button on the multifunction steering wheel repeatedly until the Radio/Media tab is displayed.

18

On information and belief, information proving that this claim element is present is not publicly available, and only in the possession of Audi. However, in my opinion this element is highly likely present in the '115 patent Accused Instrumentalities. The source code for the ECM is necessary to further support that which has been inferred.

Figure 72

83. Claim 3 of the '115 patent recites the system of claim 1, wherein the processor monitors an ignition key position to determine when to initialize the system.

84. On information and belief, the ’115 patent Accused Instrumentalities infringe claim 3 of the ’115 patent. The ’115 patent Accused Instrumentalities comprise, the system of claim 1, wherein the processor monitors an ignition key position to determine when to initialize the system (*Figure 73*).

Driving

Starting and stopping the engine

Starting the engine

The START ENGINE STOP button switches the ignition on and starts the engine.

Fig. 97 Cockpit: START ENGINE STOP button

Starting the engine

Applies to: vehicles with manual transmission

- Press the clutch pedal all the way down and move the shift lever to the neutral position.

Applies to: vehicles with automatic transmissions

- Press the brake pedal.
- Press the START ENGINE STOP button ⇨ *fig. 97*. The engine will start.
- There may be a slight delay when starting the engine in diesel vehicles in colder temperatures. Therefore, you must continue pressing the clutch pedal (manual transmission) or the brake pedal (automatic transmission) until the engine starts. The indicator light turns on while the engine is preheating.

Switching the ignition on/off

If you would like to switch the ignition on without starting the engine, follow these steps:

- Press the START ENGINE STOP button without pressing the clutch pedal (for manual transmissions) or the brake pedal (for automatic transmissions). Vehicles without the Start/Stop system*: the needle in the tachometer moves into the **READY** position.
- To switch the ignition off, press the button again. The needle in the tachometer moves into the **OFF** position.

The prewarming runs automatically in diesel vehicles when the ignition is switched on.

Equipment that uses a lot of electricity is switched off temporarily when you start the engine.

If the engine does not start immediately, the starting procedure stops automatically after a short time. Repeat the starting procedure.

Start/Stop system*

See the information in ⇨ *page 91, Start/Stop system.*

WARNING

To reduce the risk of poisoning, never allow the engine to run in confined spaces.

Note

Avoid high engine speed, full throttle, and heavy engine load if the engine has not reached operating temperature yet. You could damage the engine.

For the sake of the environment

Do not let the engine run while parked to warm up. Begin driving immediately. This reduces unnecessary emissions.

Tips

- Some noise after starting the engine is normal and is no cause for concern.
- If you leave the vehicle with the ignition switched on, the ignition will switch off after a certain amount of time. Make sure that electrical equipment such as the exterior lights are switched off.

Starting the engine

- Bring the vehicle to a full stop.
- Press the START ENGINE STOP button ⇨ *page 89, fig. 97.*

8W6012721BA

89

As shown above, the PCM initializes when the ignition is turned on.

Figure 73

85. Claim 7 of the ’115 patent recites the system of claim 1, wherein the processor monitors the vehicle's speed.

86. On information and belief, the ’115 patent Accused Instrumentalities infringe claim 3 of the ’115 patent. The ’115 patent Accused Instrumentalities comprise, the system of claim 1, wherein the processor monitors the vehicle's speed (*Figure 74*).

Audi A4 2008 ➤ , Audi A5 Cabriolet 2009 ➤ , Audi A5 Coupé 2008 ➤
Brake System - Edition 03.2017

1 - Right Rear ABS Wheel Speed Sensor - G44-
- ❑ Removing and installing. Refer to ⇒ "4.2 Overview - Rear Axle Speed Sensor", page 37 .
- ❑ Can be tested in "Guided Fault Finding" with the Vehicle Diagnostic Tester

2 - Left Rear ABS Wheel Speed Sensor - G46-

3 - ESP Sensor Unit - G419-
- ❑ 9 Nm
- ❑ Component location: under the left seat
- ❑ Removing and installing. Refer to ⇒ "4.5 ESP Sensor Unit G419 , Removing and Installing", page 42 .
- ❑ Combined transverse acceleration sensor G200, rotation rate sensor G202 and longitudinal acceleration sensor G251.
- ❑ Can be tested in "Guided Fault Finding" with the Vehicle Diagnostic Tester
- ❑ Observe installation instructions
- ❑ Check the arrow in the

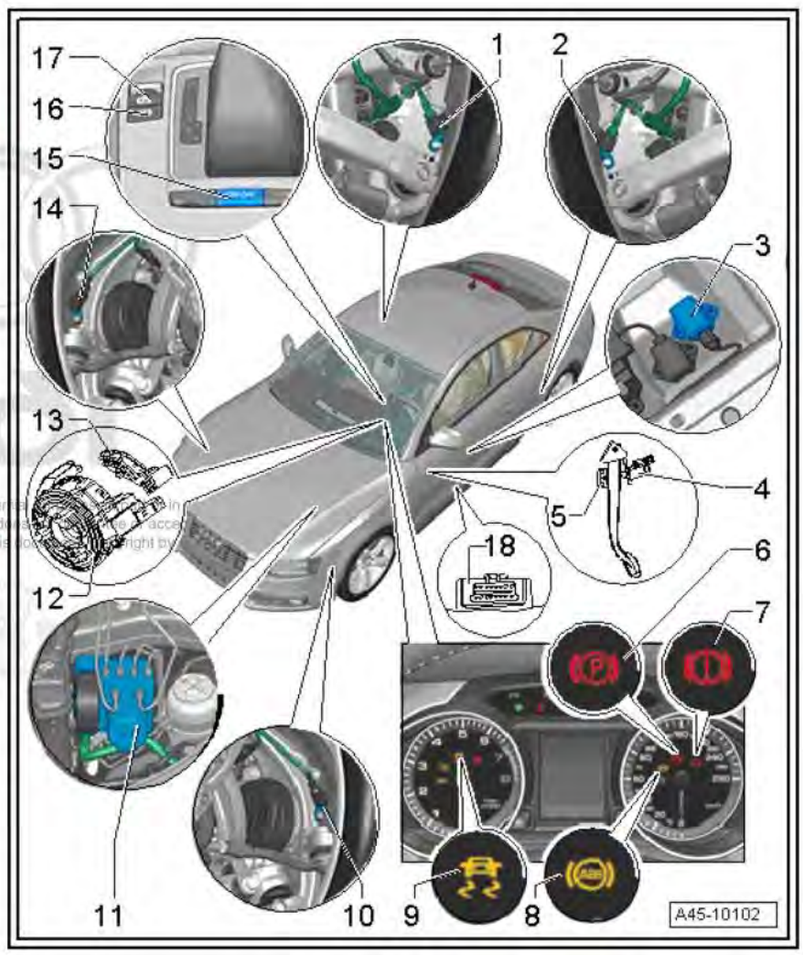

As shown above, the ’115 patent Accused Instrumentalities include an ABS Wheel Speed Sensor (WSS) for determining the automobile’s speed. The ABS Wheel Speed Sensor (WSS) generates a signal having a waveform with a frequency proportional to the speed of the vehicle. The signal generated by the ABS WSS informs the ESC Module not only if the vehicle speed is low or high but also if the vehicle is or is not moving. Then, ESC Module informs the PCM of this

information. The PCM uses this information to control fuel injection, ignition timing, transmission shift points and torque converter clutch scheduling. The WSS signal is also used to detect rough road conditions.

Figure 74

COUNT XII – INFRINGEMENT OF U.S. PATENT NO. 6,581,574

87. The allegations set forth in the foregoing paragraphs 1 through 86 are incorporated into this Twelfth Claim for Relief.

88. On June 24, 2014 U.S. Patent No. 6,581,574 ("the '574 patent"), entitled "Method for Controlling Fuel Rail Pressure," was duly and legally issued by the United States Patent and Trademark Office. A true and correct copy of the '574 patent is attached as Exhibit 12.

89. Plaintiff is the assignee and owner of the right, title and interest in and to the '574 patent, including the right to assert all causes of action arising under said patents and the right to any remedies for infringement of them.

90. Upon information and belief, Defendants have directly infringed at least claims 1 and 7 of the '574 patent by making, using, selling, importing and/or providing and causing to be used the 2015-2018 Jetta (1.4L) or other vehicles having incorporated the DTI engine (the "'574 patent Accused Instrumentalities").

91. In particular, claim 1 of the '574 patent recites a method of controlling the fuel pressure within a fuel delivery system having a fuel pump which delivers fuel to a fuel rail of an internal combustion engine comprising: providing a set-point fuel pressure; providing the estimated average fuel flow through the system; generating a feed forward control signal based upon the set-point fuel pressure and the average fuel flow; measuring the fuel rail pressure with a fuel pressure sensor; filtering the output of the fuel pressure sensor to filter out pulses due to the opening and closing of the fuel injectors; comparing the fuel rail pressure to the set-point fuel pressure and generating an error signal based upon the difference between the fuel rail pressure

and the set-point fuel pressure; and modifying the feed forward control signal based upon the error signal thereby generating a motor controller signal and sending the motor control signal to the fuel pump motor.

92. On information and belief, the ’574 patent Accused Instrumentalities infringe claim 1 of the ’574 patent. The ’574 patent Accused Instrumentalities practice a method of controlling (*Figure 75*) the fuel pressure within a fuel delivery system having a fuel pump which delivers fuel to a fuel rail of an internal combustion engine (*Figure 75*) comprising: providing a set-point fuel pressure (*Figure 75*); providing the estimated average fuel flow through the system (*Figure 76*); generating a feed forward control signal based upon the set-point fuel pressure and the average fuel flow (*Figure 77*); measuring the fuel rail pressure with a fuel pressure sensor (*Figure 78*); filtering the output of the fuel pressure sensor to filter out pulses due to the opening and closing of the fuel injectors (*Figure 79*); comparing the fuel rail pressure to the set-point fuel pressure and generating an error signal based upon the difference between the fuel rail pressure and the set-point fuel pressure (*Figure 80*); and modifying the feed forward control signal based upon the error signal thereby generating a motor controller signal and sending the motor control signal to the fuel pump motor (*Figure 81*).

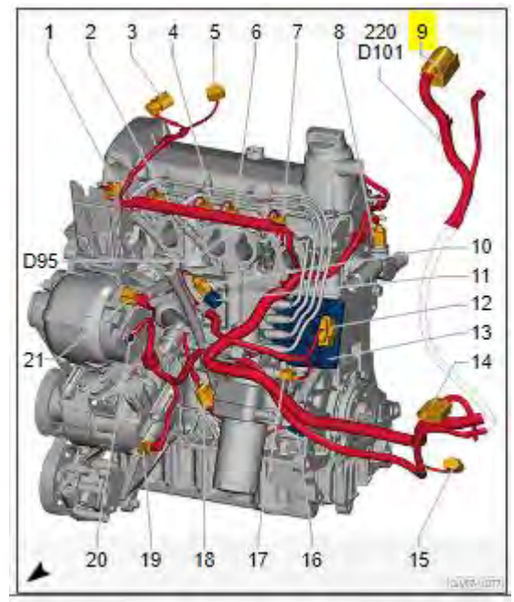

For example, the 1.4LTSI engine is an internal combustion engine.

As demonstrated in the exemplary images above (9) and below, the ’574 patent Accused Instrumentalities comprise an Engine Control Module (ECM; 9; J623) and Powertrain CAN bus (B383, B390) which practice a method of controlling the fuel delivery system in conjunction with a fuel rail pressure sensor (1).

Jetta Wiring Diagram No. 99 / 14

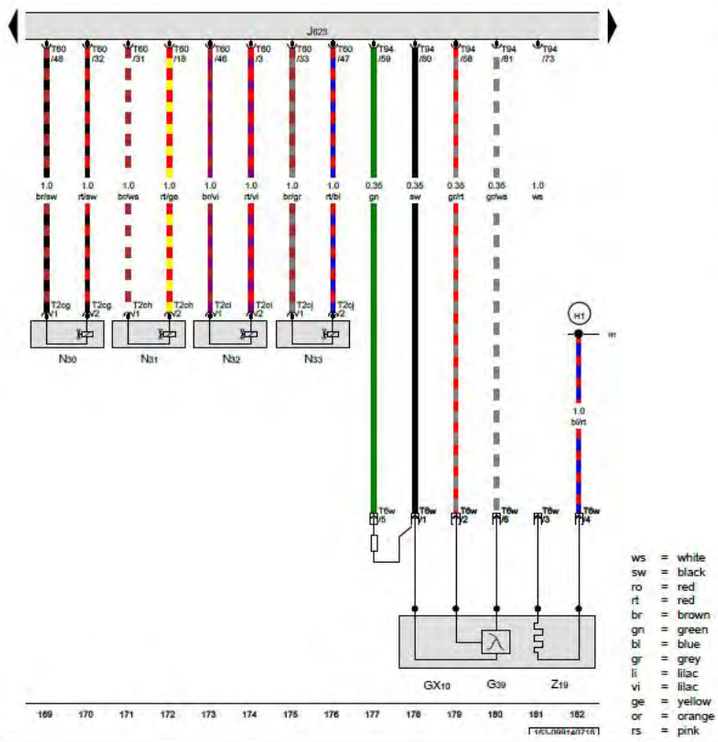

Oxygen sensor 1 before catalytic converter, Heated oxygen sensor, Engine control module, Cylinder 1 fuel injector, Cylinder 2 fuel injector, Cylinder 3 fuel injector, Cylinder 4 fuel injector

GX10	Oxygen sensor 1 before catalytic converter
G39	Heated oxygen sensor
J623	Engine control module
N30	Cylinder 1 fuel injector
N31	Cylinder 2 fuel injector
N32	Cylinder 3 fuel injector
N33	Cylinder 4 fuel injector
T2cg	2-pin connector
T2ch	2-pin connector
T2ci	2-pin connector
T2cj	2-pin connector
T6w	6-pin connector, in the engine compartment, rear
T60	60-pin connector
T94	94-pin connector
Z19	Oxygen sensor heater
H1	Positive connection (in oxygen sensor wiring harness)

ws	=	white
sw	=	black
ro	=	red
rt	=	red
br	=	brown
gn	=	green
bl	=	blue
gr	=	grey
li	=	lilac
vi	=	lilac
ge	=	yellow
or	=	orange
rs	=	pink

07.2016

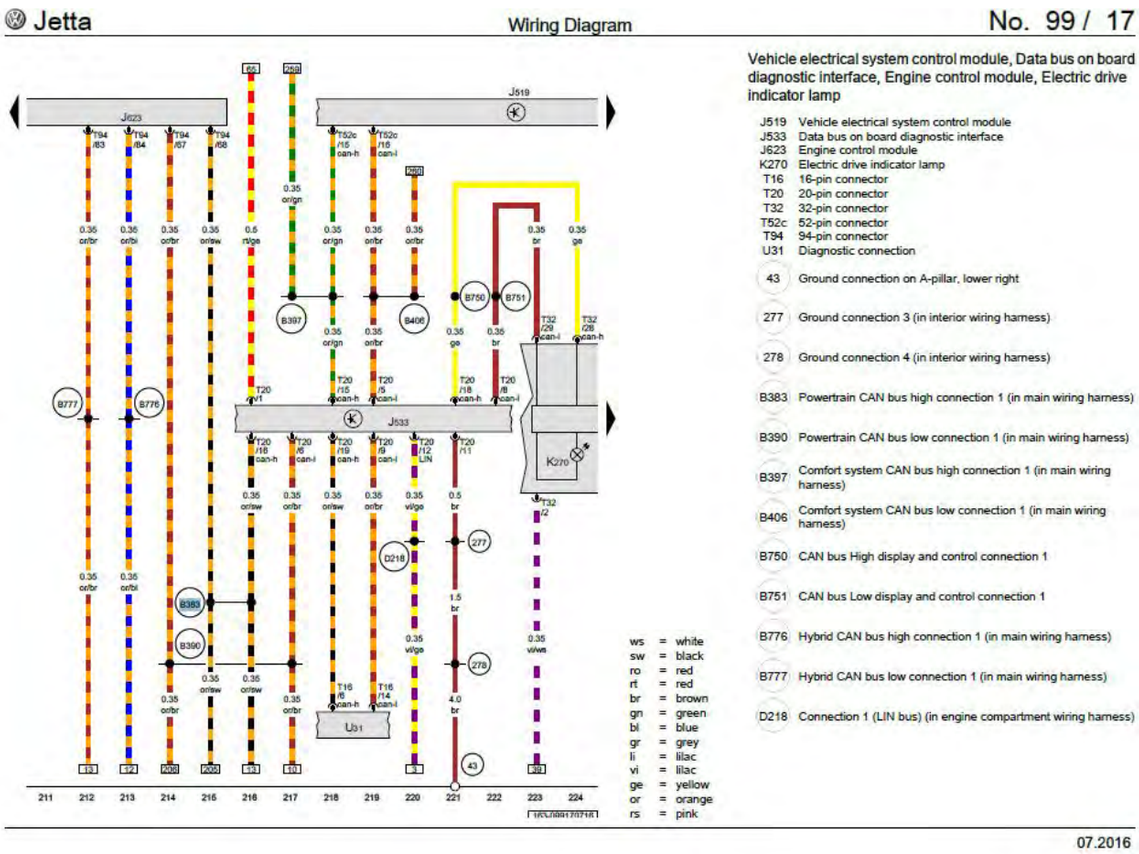

The Fuel Pressure regulator valve (8; N276) controls the pressure of the fuel flow directly into the fuel rail and therefore, to the fuel injectors in accordance with the ECM signal based on engine conditions.

2016 Volkswagen Jetta Sedan (163) L4-1.4L Turbo (CZTA)

Vehicle » Powertrain Management » Fuel Delivery and Air Induction » Fuel Pressure Regulator » Testing and Inspection

TESTING AND INSPECTION

Fuel Pressure Regulator Valve (N276), Checking

General Description

The Engine Control Module (J623) regulates the Fuel Pressure Regulator Valve (N276) directly at the High Pressure Fuel Pump to control the low pressure valve inside the High Pressure Fuel Pump.

Source: ALLDATA Pro

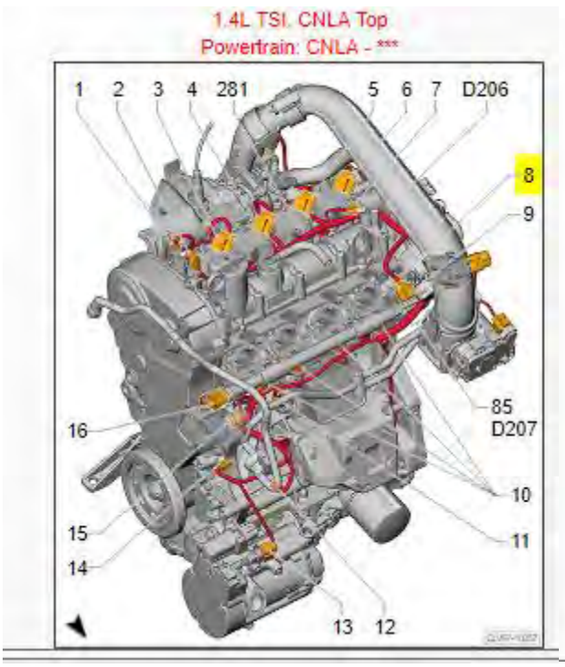

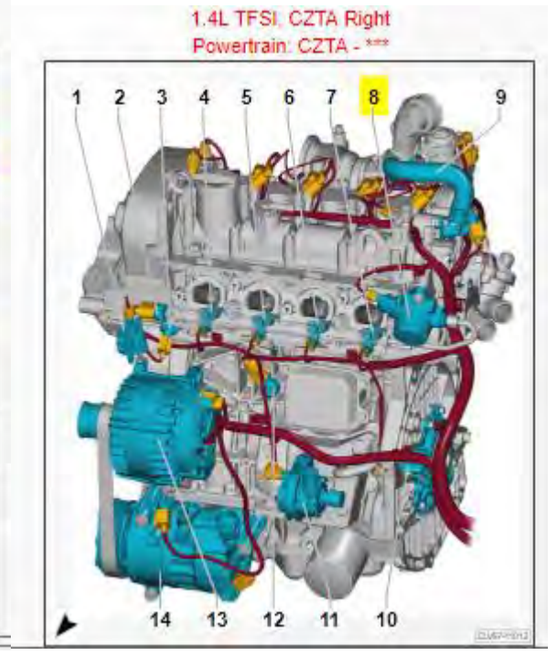

Jetta Wiring Diagram No. 99 / 13

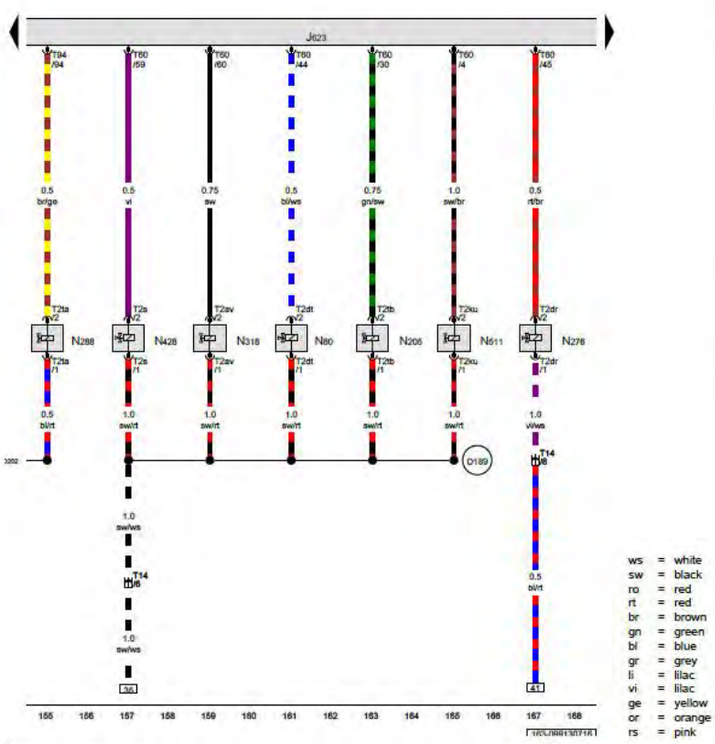

Engine control module, EVAP canister purge regulator valve 1, Camshaft adjustment valve 1, Fuel pressure regulator valve, Exhaust camshaft adjustment valve 1, Oil pressure regulation valve, Decoupler pressure actuator

J623	Engine control module
N80	EVAP canister purge regulator valve 1
N205	Camshaft adjustment valve 1
N276	Fuel pressure regulator valve
N288	Tank switch-off valve
N318	Exhaust camshaft adjustment valve 1
N428	Oil pressure regulation valve
N511	Decoupler pressure actuator
T2av	2-pin connector
T2dr	2-pin connector
T2dt	2-pin connector
T2ku	2-pin connector
T2s	2-pin connector
T2ta	2-pin connector
T2tb	2-pin connector
T14	14-pin connector
T60	60-pin connector
T94	94-pin connector
D189	Connection 87a (in engine pre-wiring harness)
D202	Connection 6 (87a) (in engine compartment wiring harness)

ws	=	white
sw	=	black
ro	=	red
rt	=	red
br	=	brown
gn	=	green
bl	=	blue
gr	=	grey
li	=	lilac
vi	=	lilac
ge	=	yellow
or	=	orange
rs	=	pink

07.2016

The ’574 patent Accused Instrumentalities comprise a Fuel delivery unit (6; GX1) and Fuel Pump Control Module (7; J538), which controls a fuel pump delivering fuel to a High-Pressure Fuel Pump, connected to a fuel rail of an internal combustion engine.

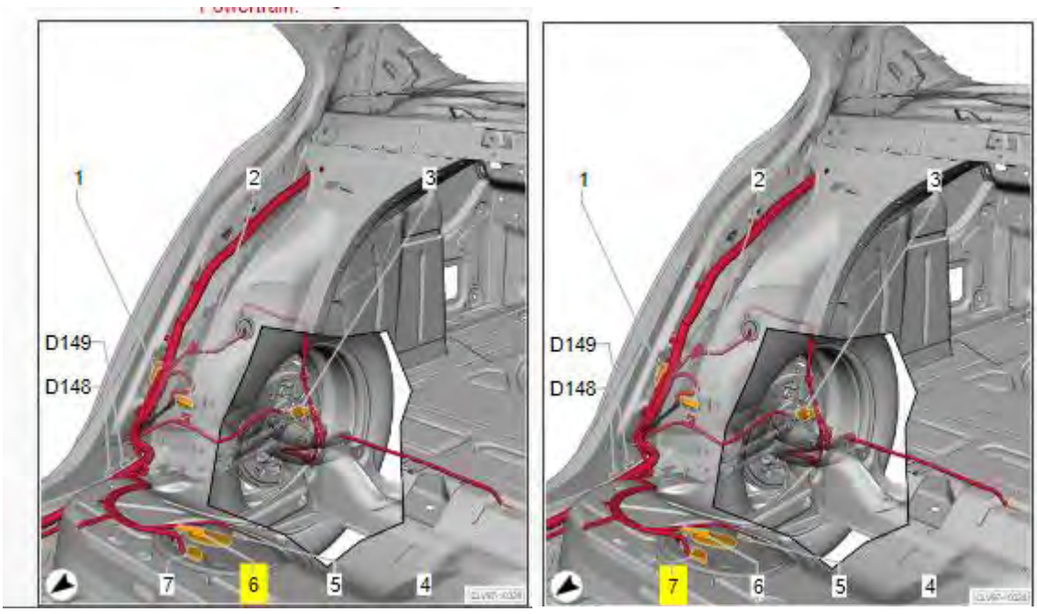

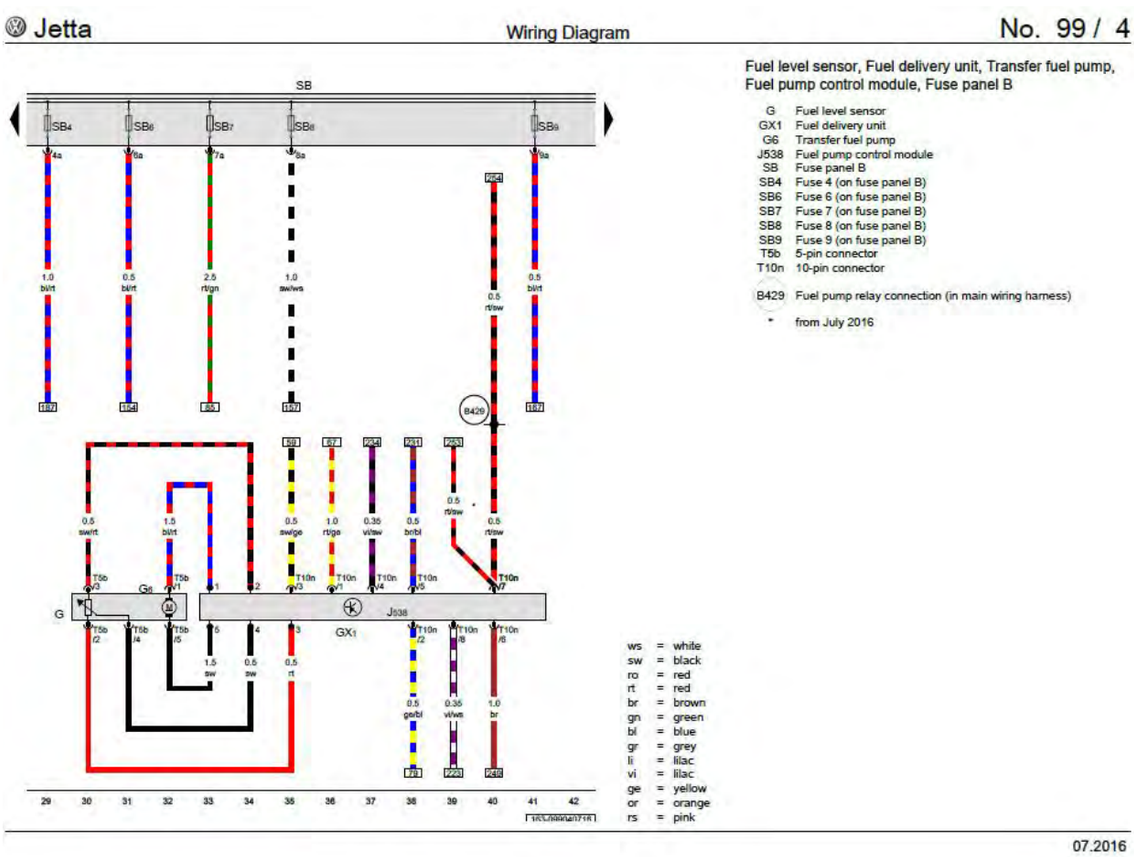

2016 Volkswagen Jetta Sedan (163) L4-1.4L Turbo (CZTA)

Vehicle » Powertrain Management » Fuel Delivery and Air Induction » Fuel Pump » Testing and Inspection » Fuel Delivery Unit (GX1)/Fuel Pump Control Module (J538), Checking

FUEL DELIVERY UNIT (GX1)/FUEL PUMP CONTROL MODULE (J538), CHECKING

Fuel Delivery Unit (GX1)/Fuel Pump Control Module (J538), Checking

General Description

The Engine Control Module (J623) tells the Fuel Pump Control Module (J538) the demand needed for fuel volume and pressure and activates the Transfer Fuel Pump (G6). The Transfer Fuel Pump (G6) transfers fuel to the rest of the fuel system, where it is monitored by the Engine Control Module (J623) through sensors, and controlled through regulators and/or metering valves.

Source: ALLDATA Pro

http://212.62.78.144/iwire/i-wire_data.html?eslpUrl=MEX5R0106099

For example, the fuel pump (13) shown below, delivers fuel to a fuel rail (shown below) of a fuel delivery system.

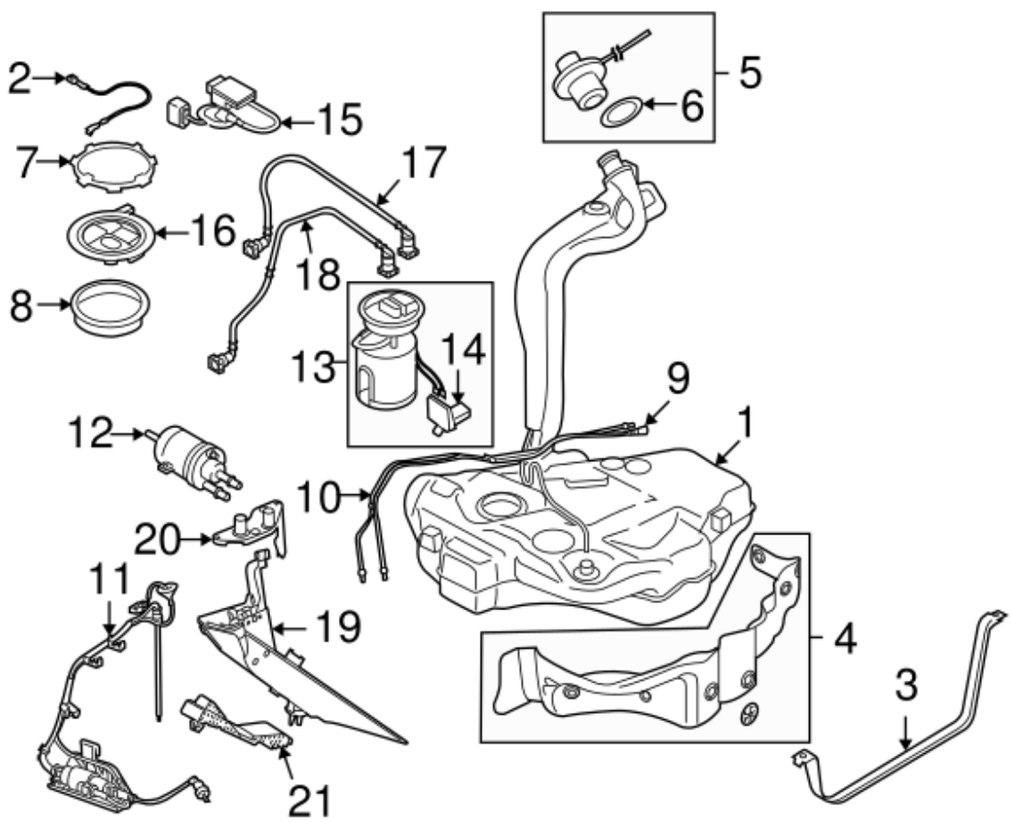

https://www.worldoemparts.com/world-vw-parts/oem-parts/volkswagen-fuel-pump-assembly-seal-1j0919133b/?c=YT12b2xrc3dhZ2Vu

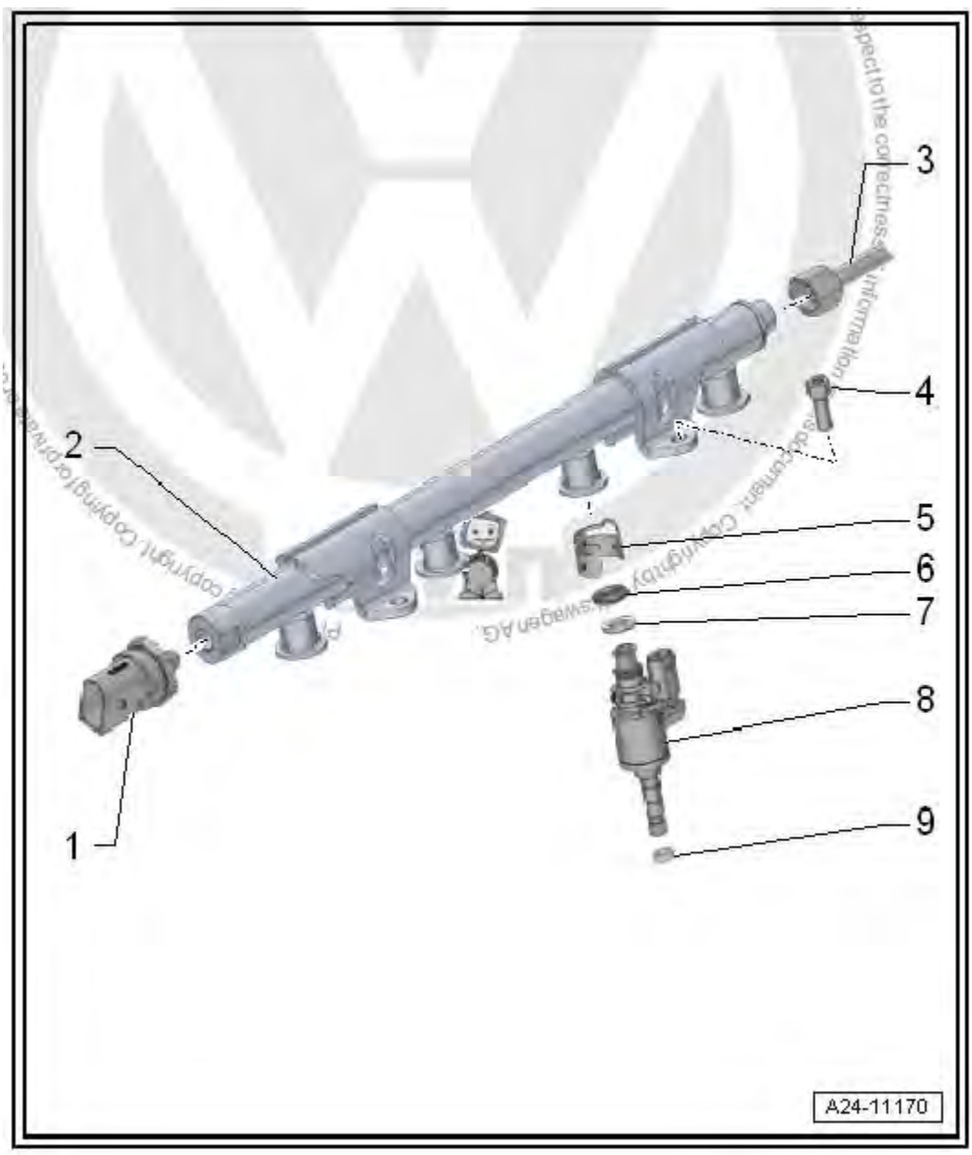

Jetta 2011 ➤, Jetta 2015 ➤ 4-Cylinder Direct Injection (1.4L Engine, 4V, EA 211, Turbocharger, Hybrid) - Edition 12.2017

Upon information and belief, the fuel (rail) pressure sensor (1), shown immediately above, measures the fuel pressure in the delivery pipe. The fuel (rail) pressure sensor converts the pressure to a voltage signal. The ECM (J623 shown above) uses this signal to control the correct fuel rail pressure and adjusts the fuel pressure regulator valve (8; N276), shown above, if the target or set-point fuel pressure calculated by the ECM and the actual pressure measured by the rail pressure sensor are different (the difference being used to derive an error signal which is used for controlling the fuel pump motor.

Figure 75

The average fuel flow is calculated by the ECM and based upon injector pulse width and fuel pressure of the fuel rail (2) shown above.

Figure 76

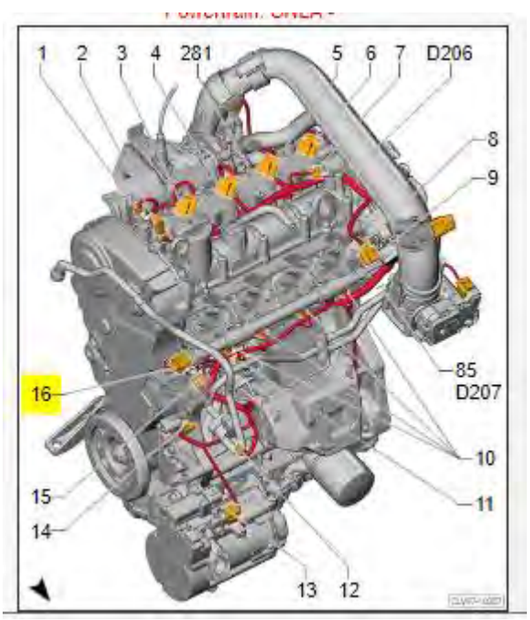

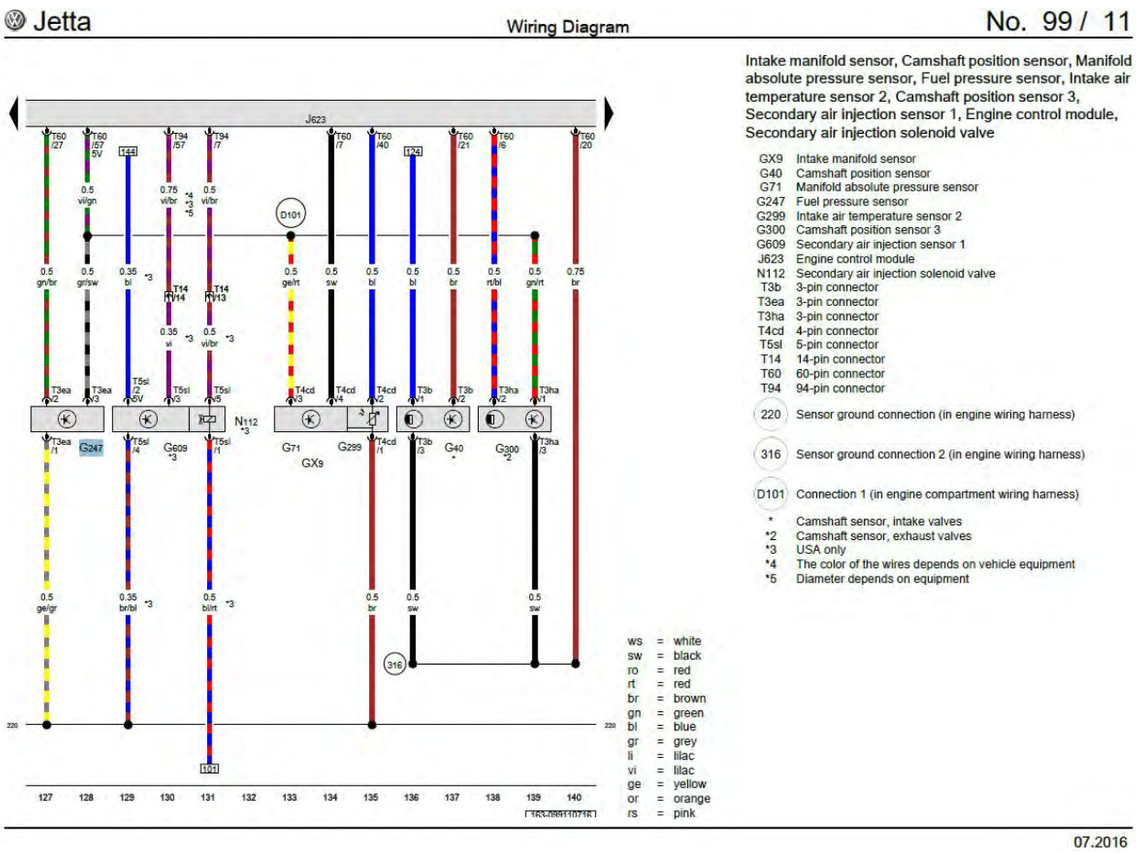

Upon information and belief, the ’574 patent Accused Instrumentalities generate a feed forward control signal via the ECM (J623) based upon the set-point fuel pressure (target pressure) and the average fuel flow (embodied in the average efficiency curve of fuel consumption). The feed forward signal is generated by the ECM/PCM software.

Figure 77

The ’574 patent Accused Instrumentalities practice a method of measuring the fuel rail pressure with a fuel rail pressure sensor pictured below (1).

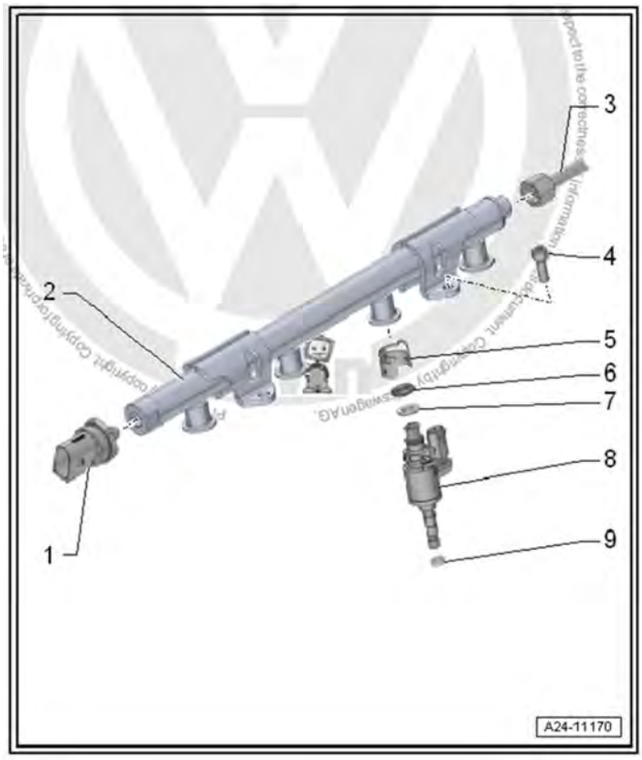

Figure 78

Upon information and belief, the ECM (J623) filters the output of the fuel rail pressure sensor (1 above); thereby it also filters out the pulses detected from the fuel rail pressure sensor to thereby filter the output of the fuel rail pressure sensor (1) in such a manner as to filter out pulses due to the opening and closing of the fuel injectors.

The ECM compares the fuel rail (actual) pressure to the set-point (target) fuel pressure and generates an error signal (Fault Code) P119A/004506 - Fuel Pressure Sensor (G247): Malfunction based upon the difference between the fuel rail pressure sensor output and the set-point fuel pressure calculated by the ECM.

Possible Causes

- Faulty Fuel Pressure Sensor (G247)
- Wiring and/or Connector(s) from/to Fuel Pressure Sensor (G247)
- Faulty HPFP
- Faulty (leaking) fuel injector

http://wiki.ross-tech.com/wiki/index.php/P119A/004506

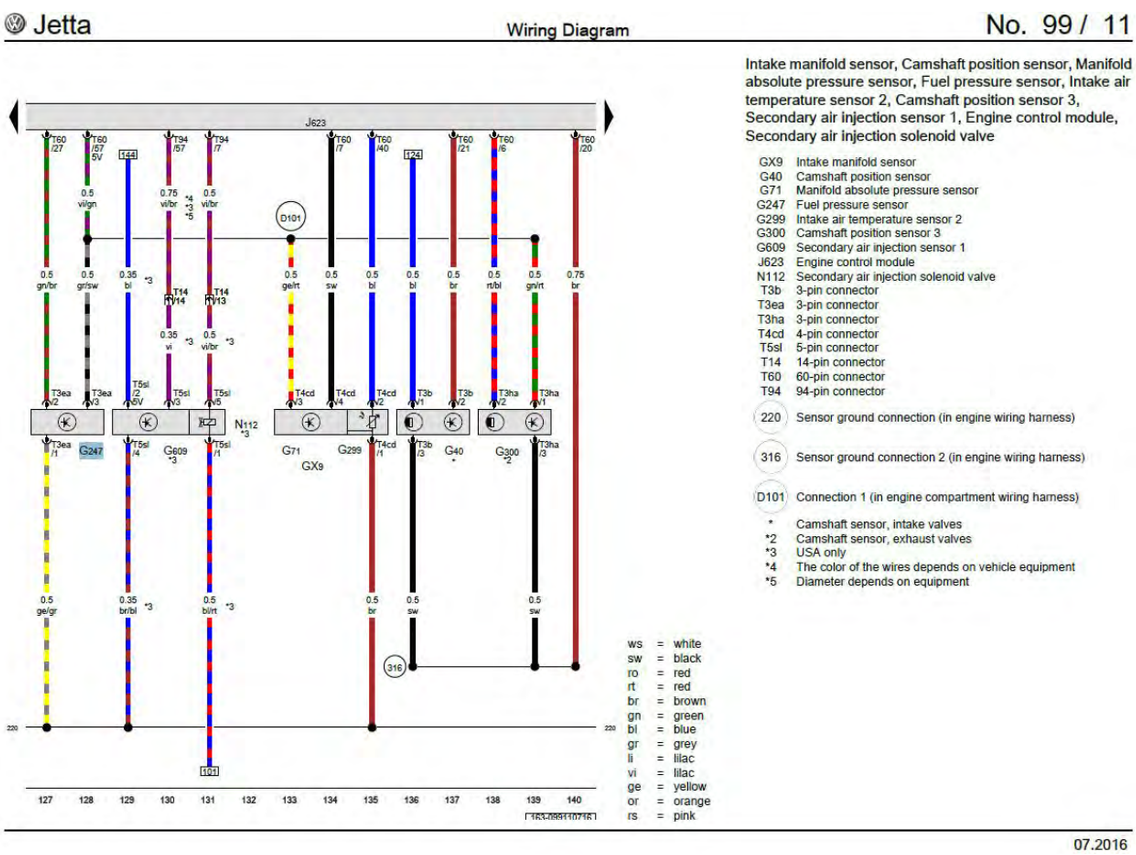

The raw output from the fuel pressure regulator valve (N276 (below)) reflects the pressure pulses of the fuel injectors, which are filtered by the ECM.

http://wiki.ross-tech.com/wiki/index.php/P119A/004506

Possible Causes

- Faulty Fuel Pressure Sensor (G247)
- Wiring and/or Connector(s) from/to Fuel Pressure Sensor (G247)
- Faulty HPFP
- Faulty (leaking) fuel injector

http://wiki.ross-tech.com/wiki/index.php/P119A/004506

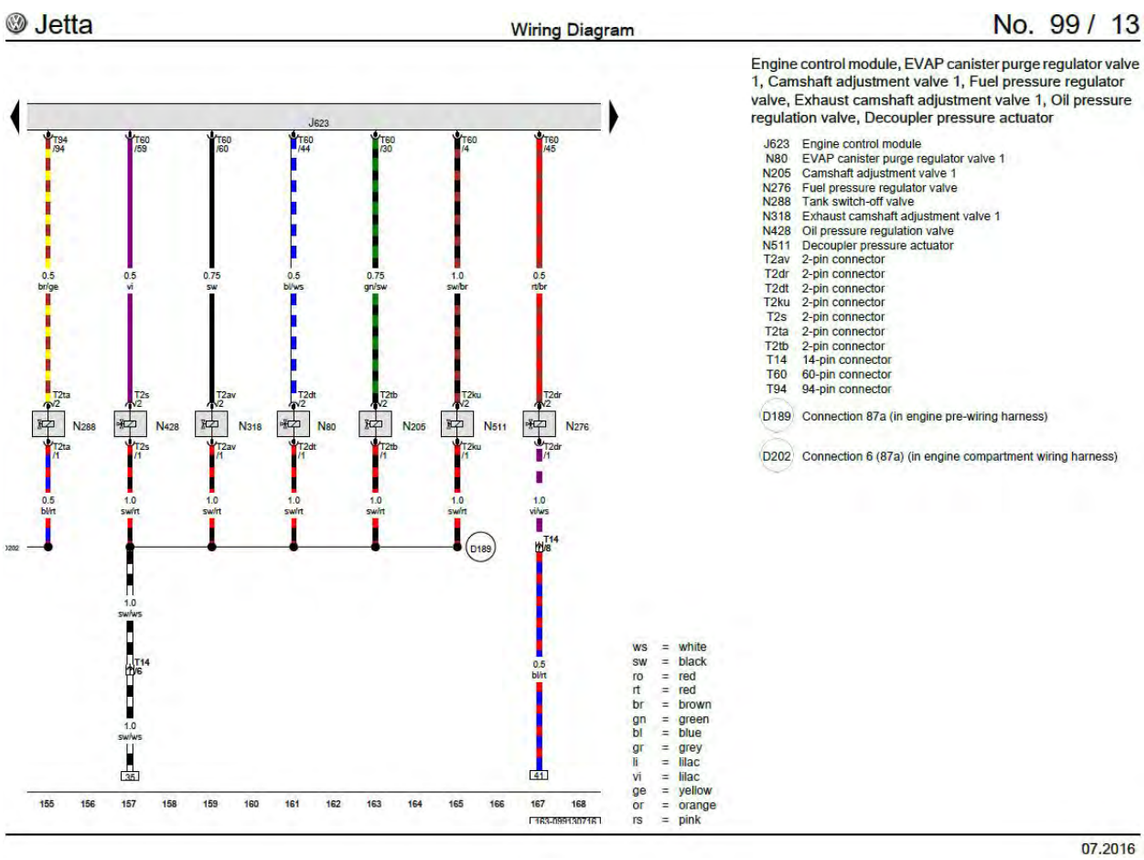

Figure 79

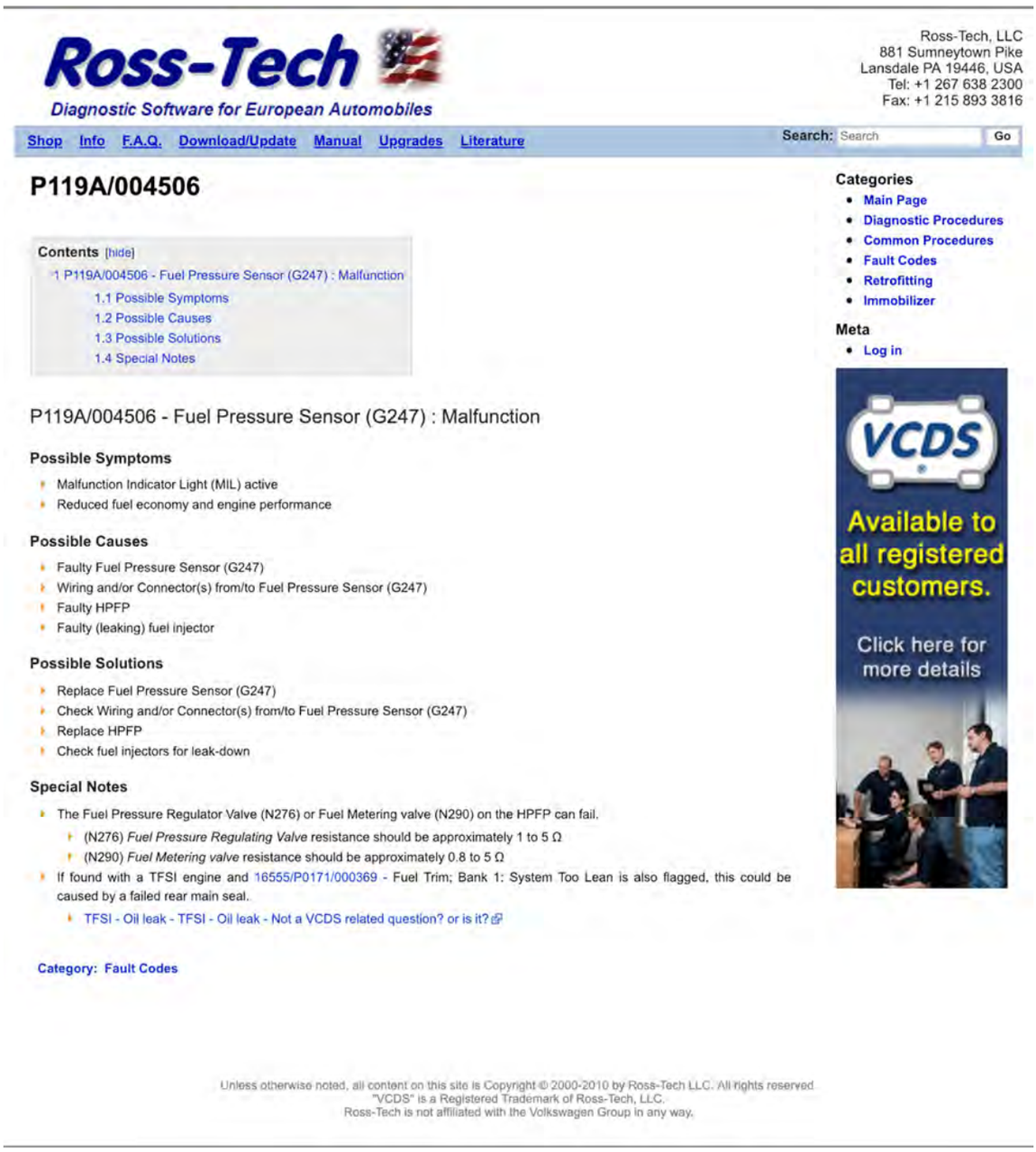

Ross-Tech
Diagnostic Software for European Automobiles

Ross-Tech, LLC
881 Sumneytown Pike
Lansdale PA 19446, USA
Tel: +1 267 638 2300
Fax: +1 215 893 3816

Shop Info F.A.Q. Download/Update Manual Upgrades Literature Search: Search Go

P119A/004506

Contents [hide]
1 P119A/004506 - Fuel Pressure Sensor (G247) : Malfunction
1.1 Possible Symptoms
1.2 Possible Causes
1.3 Possible Solutions
1.4 Special Notes

P119A/004506 - Fuel Pressure Sensor (G247) : Malfunction

Possible Symptoms
- Malfunction Indicator Light (MIL) active
- Reduced fuel economy and engine performance

Possible Causes
- Faulty Fuel Pressure Sensor (G247)
- Wiring and/or Connector(s) from/to Fuel Pressure Sensor (G247)
- Faulty HPFP
- Faulty (leaking) fuel injector

Possible Solutions
- Replace Fuel Pressure Sensor (G247)
- Check Wiring and/or Connector(s) from/to Fuel Pressure Sensor (G247)
- Replace HPFP
- Check fuel injectors for leak-down

Special Notes
- The Fuel Pressure Regulator Valve (N276) or Fuel Metering valve (N290) on the HPFP can fail.
  - (N276) *Fuel Pressure Regulating Valve* resistance should be approximately 1 to 5 Ω
  - (N290) *Fuel Metering valve* resistance should be approximately 0.8 to 5 Ω
- If found with a TFSI engine and 16555/P0171/000369 - Fuel Trim; Bank 1: System Too Lean is also flagged, this could be caused by a failed rear main seal.
  - TFSI - Oil leak - TFSI - Oil leak - Not a VCDS related question? or is it?

Category: Fault Codes

Categories
- Main Page
- Diagnostic Procedures
- Common Procedures
- Fault Codes
- Retrofitting
- Immobilizer

Meta
- Log in

VCDS
Available to all registered customers.
Click here for more details

Unless otherwise noted, all content on this site is Copyright © 2000-2010 by Ross-Tech LLC. All rights reserved
"VCDS" is a Registered Trademark of Ross-Tech, LLC.
Ross-Tech is not affiliated with the Volkswagen Group in any way.

http://wiki.ross-tech.com/wiki/index.php/P119A/004506

Figure 80

As demonstrated in the exemplary images below, the ’574 patent Accused Instrumentalities modify a feed forward control signal via the ECM (J623) and /or CAN Bus when the fuel (rail) pressure sensor (G247) detects a fuel pressure different from the set-point fuel pressure and communicates that difference (error signal) to the ECM which in turn generates a control signal based upon that error signal to the fuel pump motor.

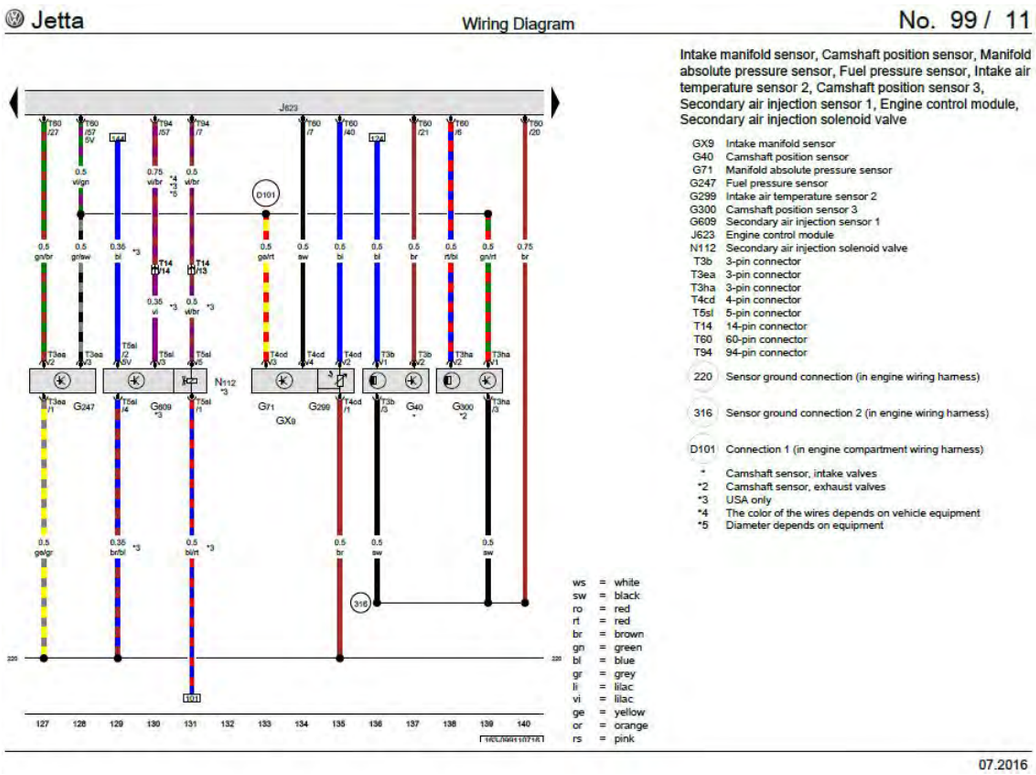

The fuel (rail) pressure sensor (2) installed on the fuel cylinder (fuel rail) and the fuel pressure regulator valve (N276) deliver the modified feed forward control signal based upon the error signal (received from the ECM (J623)) thereby generating a motor controller signal and sending the motor control signal to the fuel pump motor controlled by the fuel pump motor control module (J538). This is accomplished via the fuel delivery unit (GX1) with the fuel pump control module (J538) controlling the fuel pump (G5).

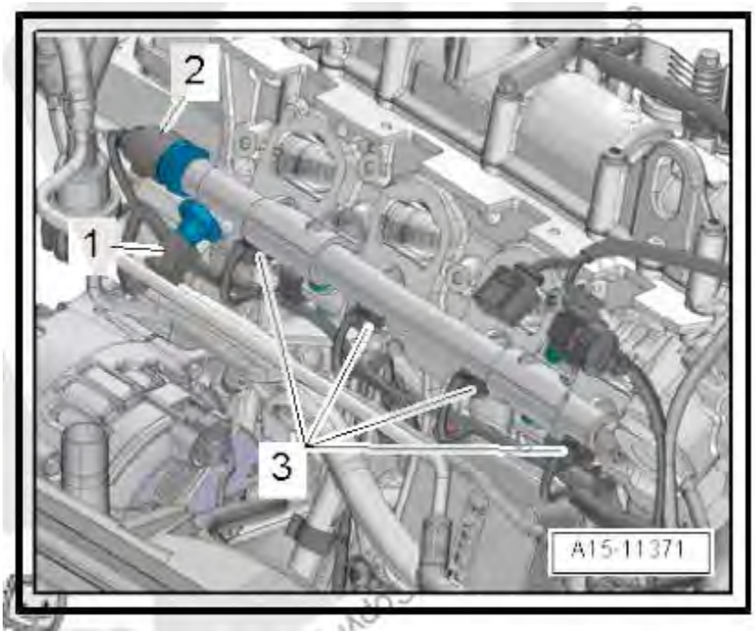

Jetta Wiring Diagram No. 99 / 13

Engine control module, EVAP canister purge regulator valve 1, Camshaft adjustment valve 1, Fuel pressure regulator valve, Exhaust camshaft adjustment valve 1, Oil pressure regulation valve, Decoupler pressure actuator

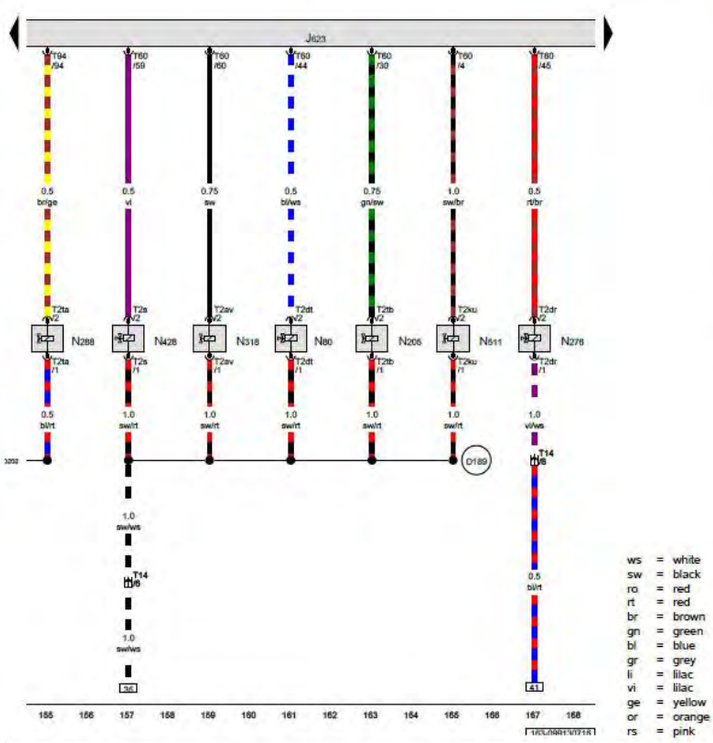

J623	Engine control module	
N80	EVAP canister purge regulator valve 1	
N205	Camshaft adjustment valve 1	
N276	Fuel pressure regulator valve	
N288	Tank switch-off valve	
N318	Exhaust camshaft adjustment valve 1	
N428	Oil pressure regulation valve	
N511	Decoupler pressure actuator	
T2av	2-pin connector	
T2dr	2-pin connector	
T2dt	2-pin connector	
T2ku	2-pin connector	
T2s	2-pin connector	
T2ta	2-pin connector	
T2tb	2-pin connector	
T14	14-pin connector	
T60	60-pin connector	
T94	94-pin connector	
D189	Connection 87a (in engine pre-wiring harness)	
D202	Connection 6 (87a) (in engine compartment wiring harness)	

ws	=	white
sw	=	black
ro	=	red
rt	=	red
br	=	brown
gn	=	green
bl	=	blue
gr	=	grey
li	=	lilac
vi	=	lilac
ge	=	yellow
or	=	orange
rs	=	pink

07.2016

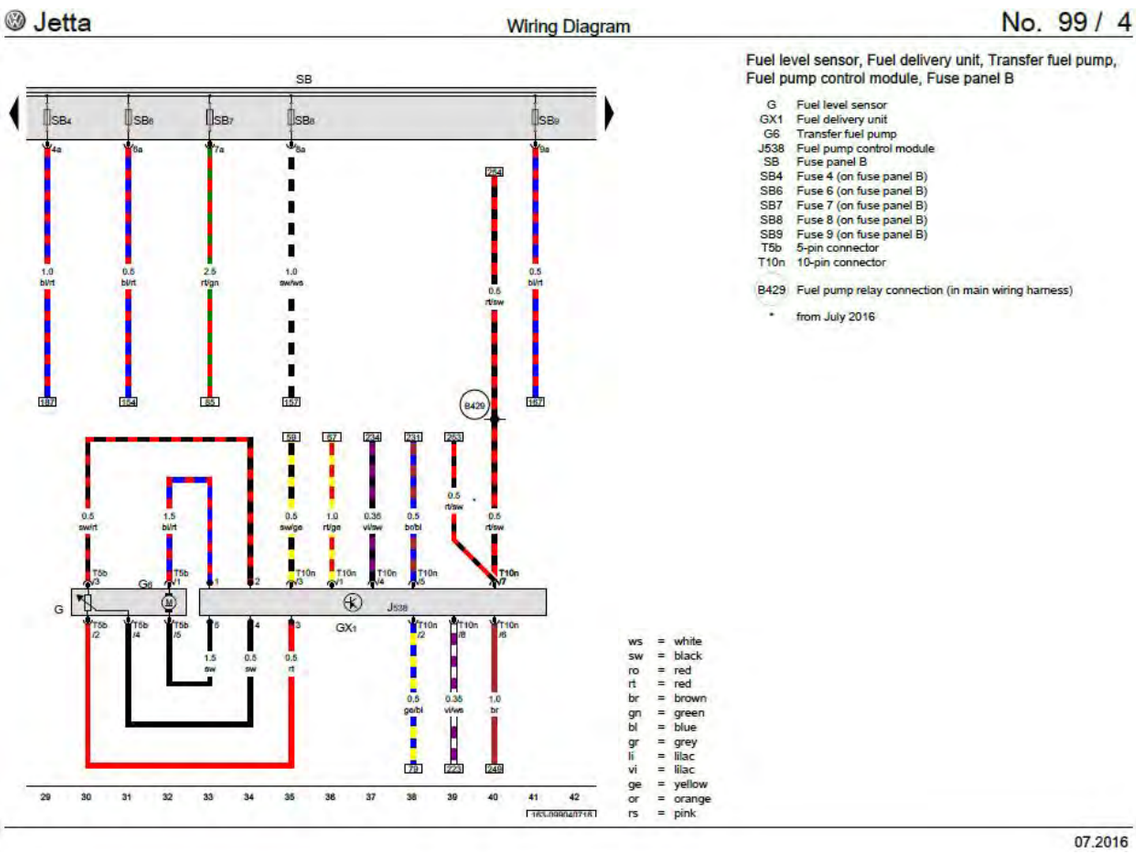

Based upon the totality of the foregoing evidence, and based further upon information and belief, the ’574 patent Accused Instrumentalities practice “a method of controlling the fuel pressure within a fuel delivery system having a fuel pump which delivers fuel to a fuel rail of an internal combustion engine comprising: providing a set-point fuel pressure; providing the estimated average fuel flow through the system; generating a feed forward control signal based upon the set-point fuel pressure and the average fuel flow; measuring the fuel rail pressure with a fuel pressure sensor; filtering the output of the fuel pressure sensor to filter out pulses due to the opening and closing of the fuel injectors; comparing the fuel rail pressure to the set-point fuel pressure and generating an error signal based upon the difference between the fuel rail pressure and the set-point fuel pressure; and modifying the feed forward control signal based upon the error signal thereby generating a motor controller signal and sending the motor control signal to the fuel pump motor.”

Figure 81

93. Claim 7 of the ’574 patent recites a fuel delivery system comprising: a fuel rail adapted to deliver fuel to fuel injectors of an automotive vehicle, a fuel pump adapted to deliver fuel to said fuel rail, a fuel pressure sensor adapted to measure the fuel rail pressure, a low-pass filter adapted to filter the output of said fuel pressure sensor to filter out pulses due to the opening and closing of the fuel injectors, and a fuel pump motor controller having: a feed

forward controller adapted to provide a feed forward signal having fuel pump motor control parameters based upon a set-point fuel pressure and the average fuel flow through said system; a first summing junction adapted to compare the fuel rail pressure to the set-point fuel pressure and to generate an error value based upon the difference between the fuel rail pressure and the set-point fuel pressure; a feed back controller adapted to receive the error value and to generate a feed back control signal; a second summing junction adapted to receive the feed back control signal from said feed back controller and the feed forward control signal from the feed forward controller and to modify the fuel pump motor control parameters of the feed forward control signal based upon the feed back control signal to generate a motor controller signal; and a fuel pump motor controller driver adapted to receive the motor controller signal and to control the speed of said fuel pump based upon the motor controller signal.

94. On information and belief, the ’574 patent Accused Instrumentalities infringe claim 7 of the ’574 patent. The ’574 patent Accused Instrumentalities comprise a fuel delivery system (*Figure 82*) comprising: a fuel rail adapted to deliver fuel to fuel injectors of an automotive vehicle (*Figure 83*), a fuel pump adapted to deliver fuel to said fuel rail, a fuel pressure sensor adapted to measure the fuel rail pressure (*Figures 84-85*), a low-pass filter adapted to filter the output of said fuel pressure sensor to filter out pulses due to the opening and closing of the fuel injectors (*Figure 86*), and a fuel pump motor controller (*Figure 87*) having: a feed forward controller adapted to provide a feed forward signal having fuel pump motor control parameters based upon a set-point fuel pressure and the average fuel flow through said system (*Figure 88*); a first summing junction adapted to compare the fuel rail pressure to the set-point fuel pressure and to generate an error value based upon the difference between the fuel rail pressure and the set-point fuel pressure (*Figure 89*); a feed back controller adapted to receive the error value and to generate a feed back control signal (*Figure 90*); a second summing junction

adapted to receive the feed back control signal from said feed back controller and the feed forward control signal from the feed forward controller and to modify the fuel pump motor control parameters of the feed forward control signal based upon the feed back control signal to generate a motor controller signal (*Figure 91*); and a fuel pump motor controller driver adapted to receive the motor controller signal and to control the speed of said fuel pump based upon the motor controller signal (*Figure 92*).

The ’574 patent Accused Instrumentalities comprise a fuel delivery system.

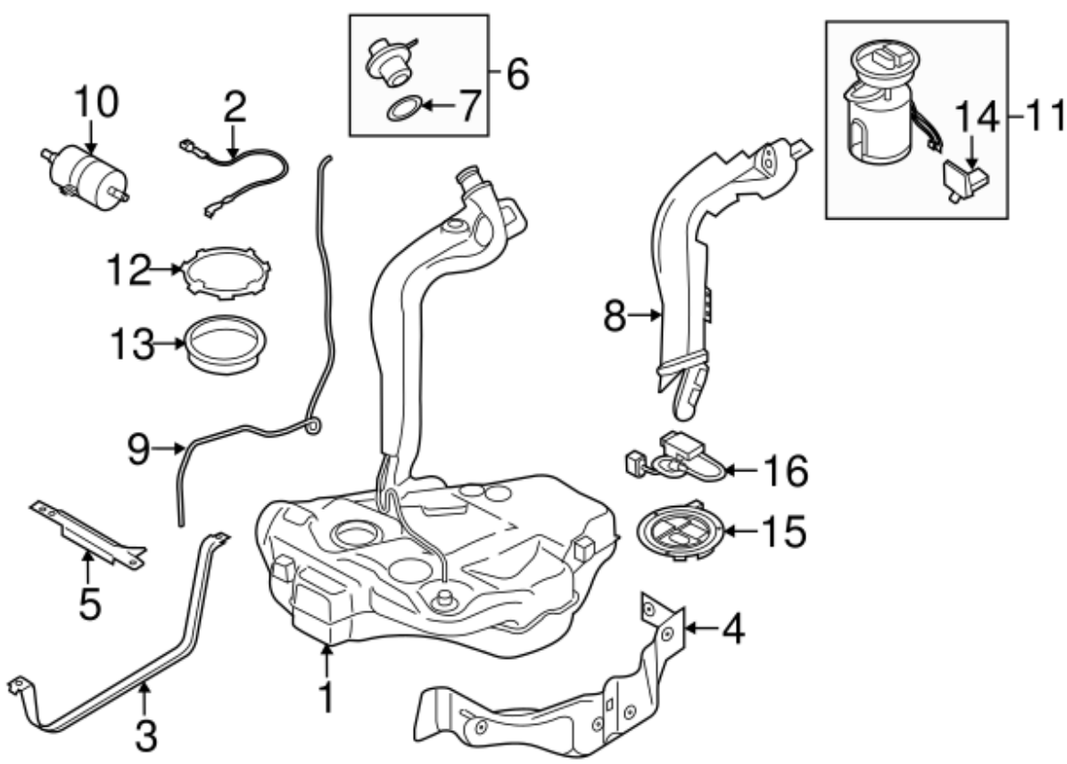

Figure 82

The ’574 patent Accused Instrumentalities comprise a fuel delivery pipe (rail) adapted to deliver fuel to fuel injectors (8) of an automotive vehicle. *See below*.

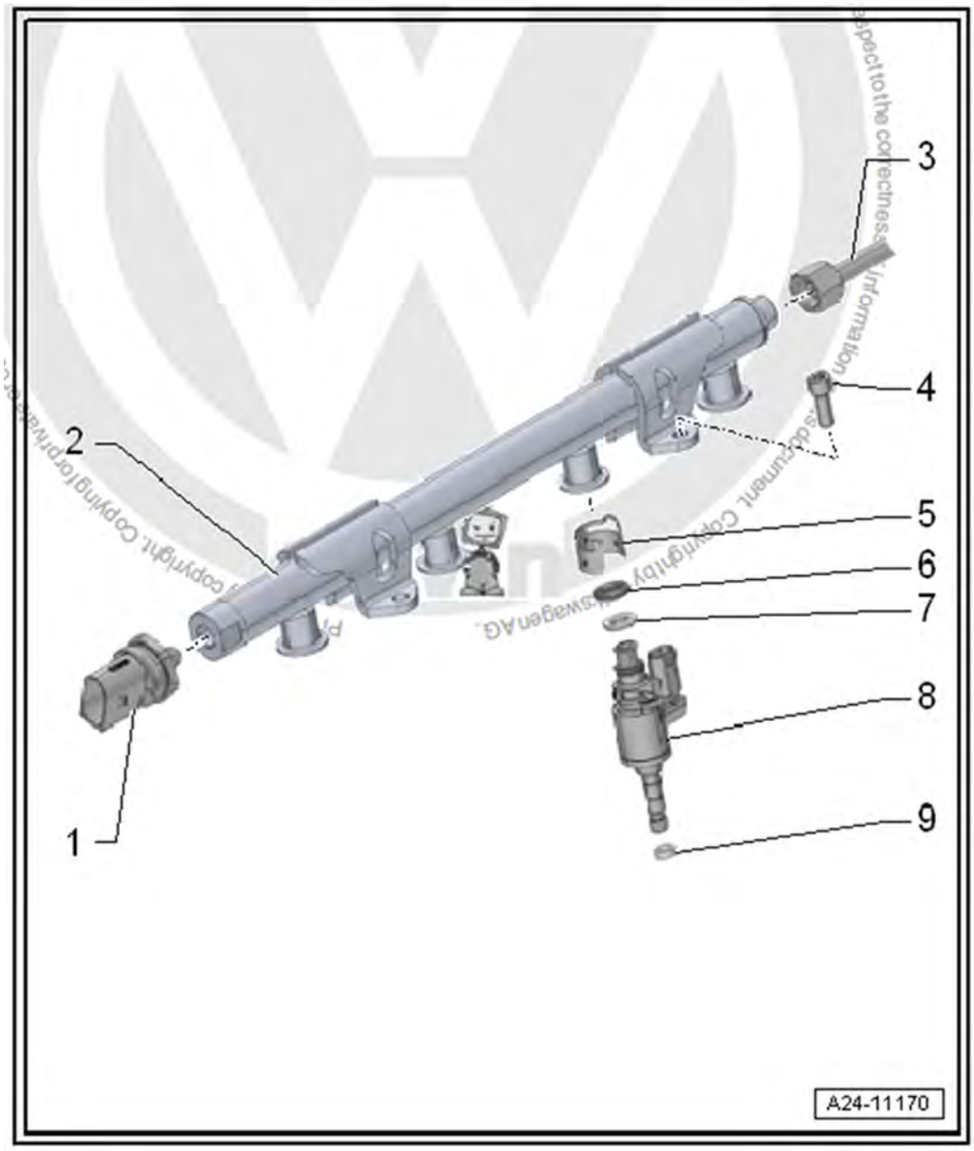

Figure 83

The ’574 patent Accused Instrumentalities comprise a fuel pump (8) adapted to deliver fuel to said fuel rail (2). *See below*.

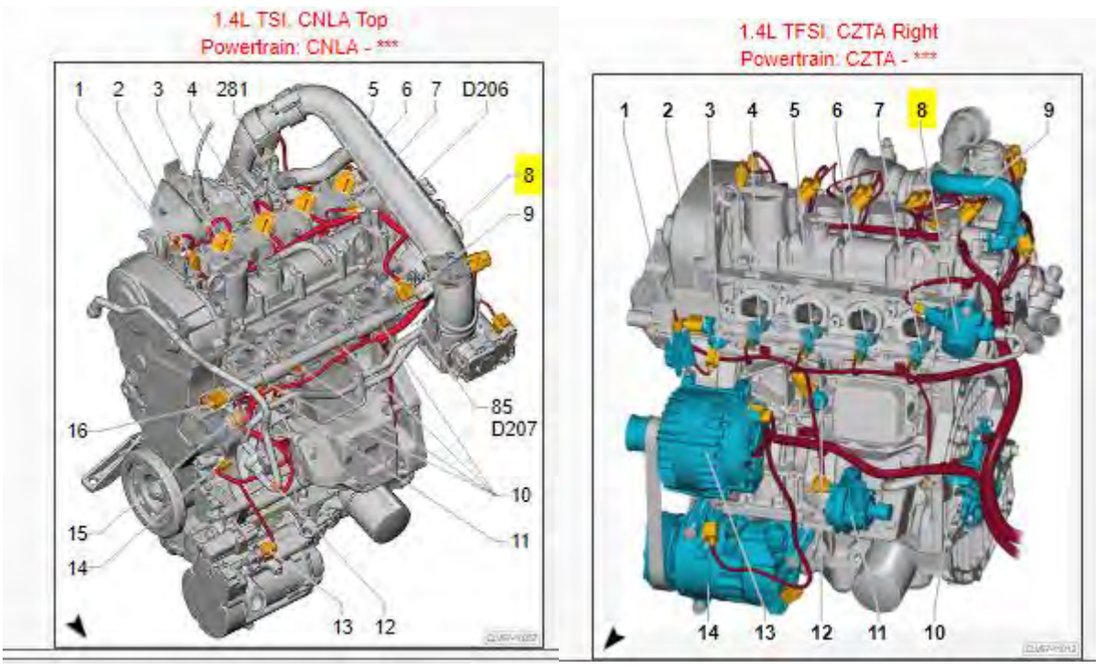

Figure 84

The ’574 patent Accused Instrumentalities comprise a fuel pressure sensor (1; G247) adapted to measure the fuel rail pressure. *See below*.

Jetta Wiring Diagram No. 99 / 11

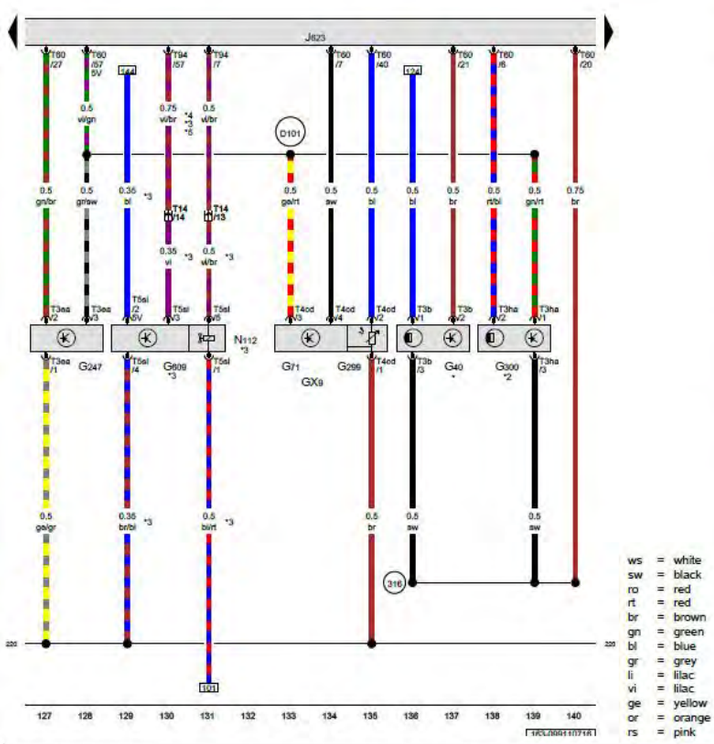

Intake manifold sensor, Camshaft position sensor, Manifold absolute pressure sensor, Fuel pressure sensor, Intake air temperature sensor 2, Camshaft position sensor 3, Secondary air injection sensor 1, Engine control module, Secondary air injection solenoid valve

GX9	Intake manifold sensor
G40	Camshaft position sensor
G71	Manifold absolute pressure sensor
G247	Fuel pressure sensor
G299	Intake air temperature sensor 2
G300	Camshaft position sensor 3
G609	Secondary air injection sensor 1
J623	Engine control module
N112	Secondary air injection solenoid valve
T3b	3-pin connector
T3ea	3-pin connector
T3ha	3-pin connector
T4cd	4-pin connector
T5sl	5-pin connector
T14	14-pin connector
T60	60-pin connector
T94	94-pin connector
220	Sensor ground connection (in engine wiring harness)
316	Sensor ground connection 2 (in engine wiring harness)
D101	Connection 1 (in engine compartment wiring harness)
*	Camshaft sensor, intake valves
*2	Camshaft sensor, exhaust valves
*3	USA only
*4	The color of the wires depends on vehicle equipment
*5	Diameter depends on equipment

ws	=	white
sw	=	black
ro	=	red
rt	=	red
br	=	brown
gn	=	green
bl	=	blue
gr	=	grey
li	=	lilac
vi	=	lilac
ge	=	yellow
or	=	orange
rs	=	pink

07.2016

Figure 85

The ’574 patent Accused Instrumentalities comprise a low-pass filter adapted to filter the output of said fuel pressure sensor to filter out pulses due to the opening and closing of the fuel injectors.

Upon information and belief, the ECM (J623) filters the output of the fuel rail pressure sensor (1 below); thereby it also filters out the pulses detected from the fuel rail pressure sensor to thereby filter the output of the fuel rail pressure sensor (1) in such a manner as to filter out pulses due to the opening and closing of the fuel injectors.

Figure 86

The ’574 patent Accused Instrumentalities comprise a fuel pump motor controller (J538). *See below*.

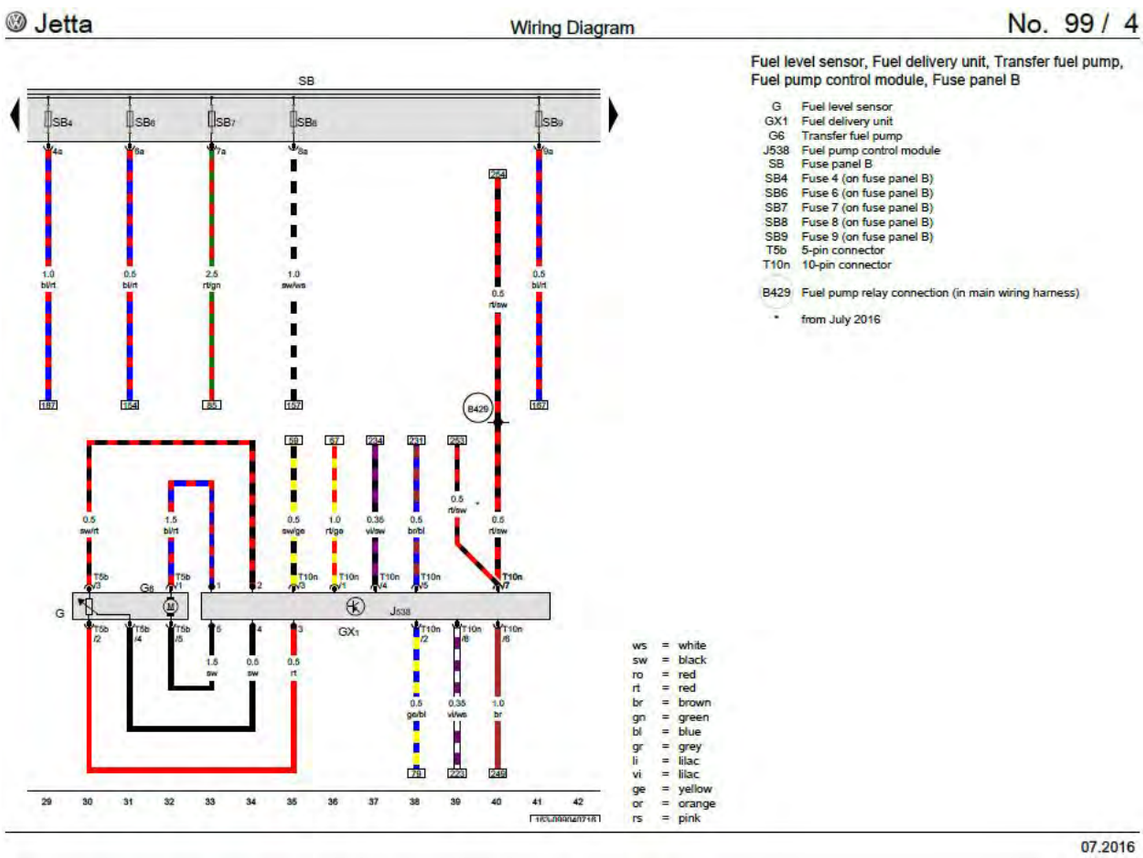

Figure 87

The ’574 patent Accused Instrumentalities comprise a feed forward controller adapted to provide a feed forward signal having fuel pump motor control parameters based upon a set-point fuel pressure and the average fuel flow through said system.

For example, the Engine Control Module (J623) and Fuel pump control module (J538) are feed forward controllers adapted to provide a feed forward signal having fuel pump motor control parameters based upon a set-point fuel pressure and the aver fuel flow through said system. *See below*.

For example, the Fuel gauge sending unit (14) shown immediately below, sends fuel data to the ECM, which calculates the estimated average fuel flow through the system.

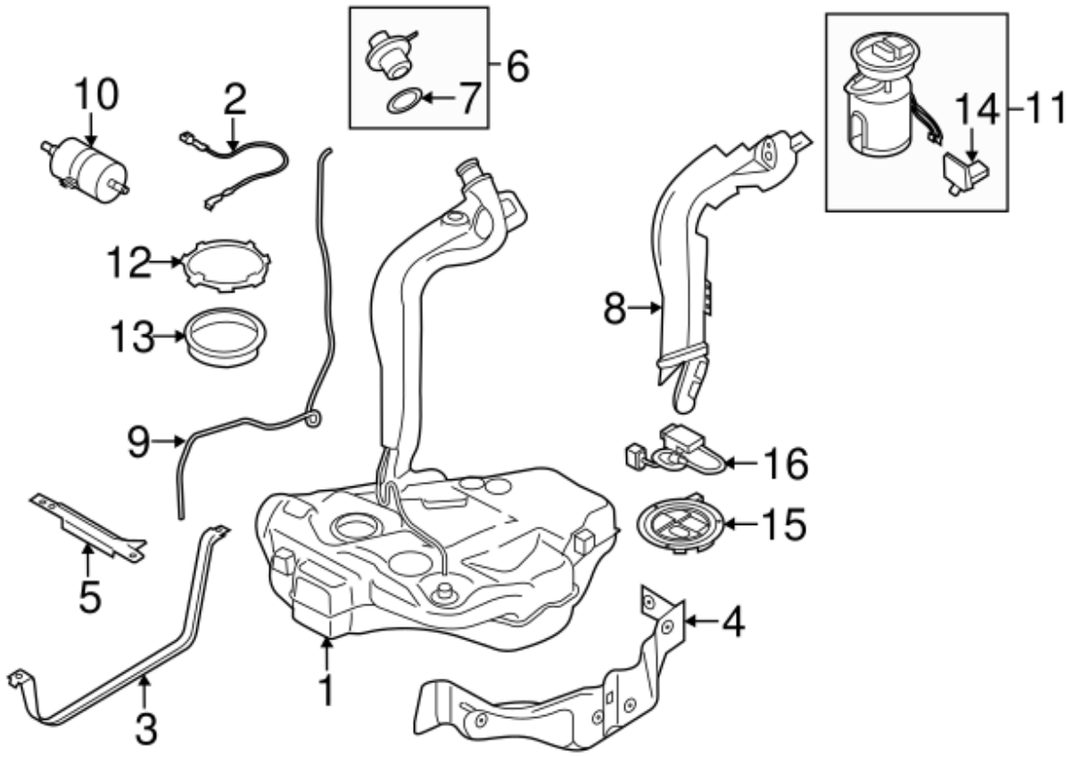
10
2
6
7
14
11
12
13
8
9
16
15
5
4
1
3

Jetta Wiring Diagram No. 99 / 11

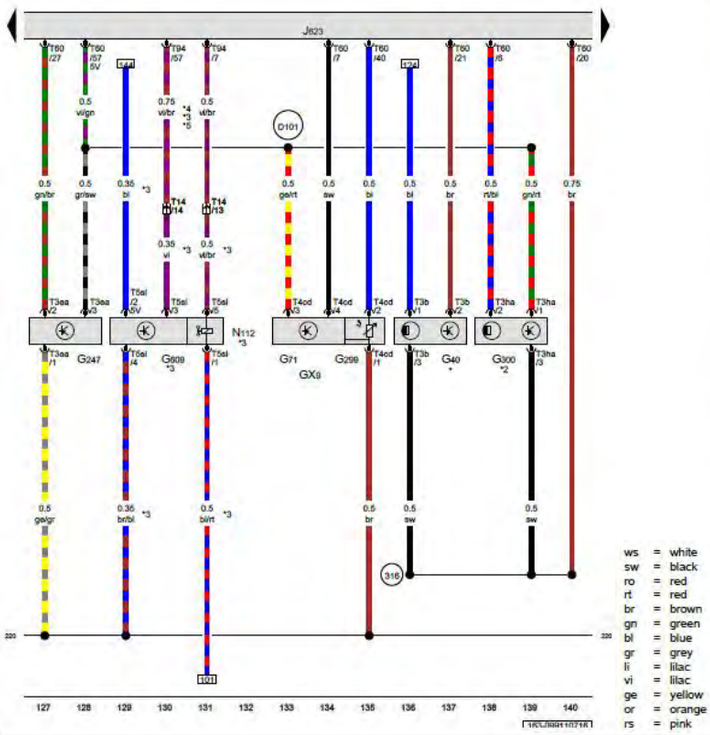

ws = white
sw = black
ro = red
rt = red
br = brown
gn = green
bl = blue
gr = grey
li = lilac
vi = lilac
ge = yellow
or = orange
rs = pink

Intake manifold sensor, Camshaft position sensor, Manifold absolute pressure sensor, Fuel pressure sensor, Intake air temperature sensor 2, Camshaft position sensor 3, Secondary air injection sensor 1, Engine control module, Secondary air injection solenoid valve

GX9	Intake manifold sensor
G40	Camshaft position sensor
G71	Manifold absolute pressure sensor
G247	Fuel pressure sensor
G299	Intake air temperature sensor 2
G300	Camshaft position sensor 3
G609	Secondary air injection sensor 1
J623	Engine control module
N112	Secondary air injection solenoid valve
T3b	3-pin connector
T3ea	3-pin connector
T3ha	3-pin connector
T4cd	4-pin connector
T5sl	5-pin connector
T14	14-pin connector
T60	60-pin connector
T94	94-pin connector
220	Sensor ground connection (in engine wiring harness)
316	Sensor ground connection 2 (in engine wiring harness)
D101	Connection 1 (in engine compartment wiring harness)
*	Camshaft sensor, intake valves
*2	Camshaft sensor, exhaust valves
*3	USA only
*4	The color of the wires depends on vehicle equipment
*5	Diameter depends on equipment

07.2016

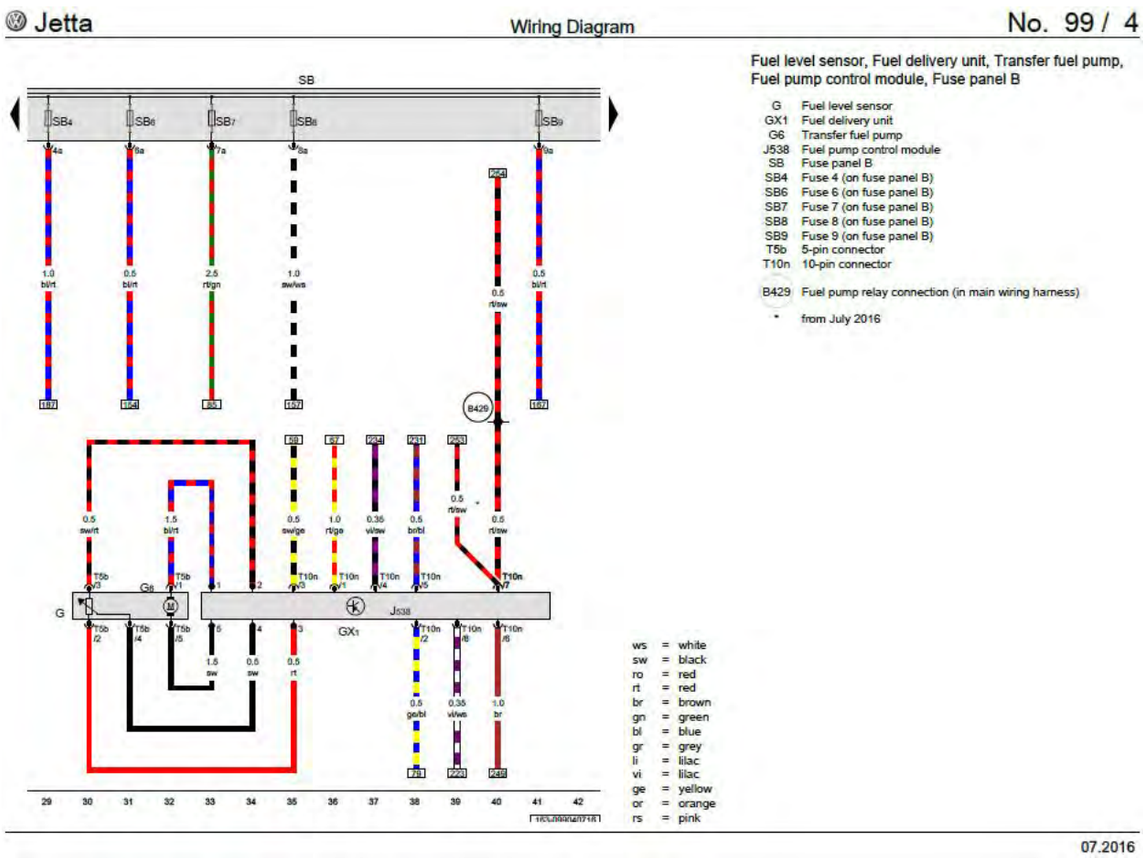

Figure 88

The ’574 patent Accused Instrumentalities comprise a first summing junction adapted to compare the fuel rail pressure to the set-point fuel pressure and to generate an error value based upon the difference between the fuel rail pressure and the set-point fuel pressure.

As shown immediately below, the fuel (rail) pressure sensor (1) generates a signal corresponding to the fuel rail pressure. The fuel rail pressure generated by the fuel (rail) pressure sensor is compared to the set point fuel (rail) pressure (calculated and generated by the ECM). When the fuel rail pressure and the set-point fuel pressure differ, an error value is generated based upon the difference.

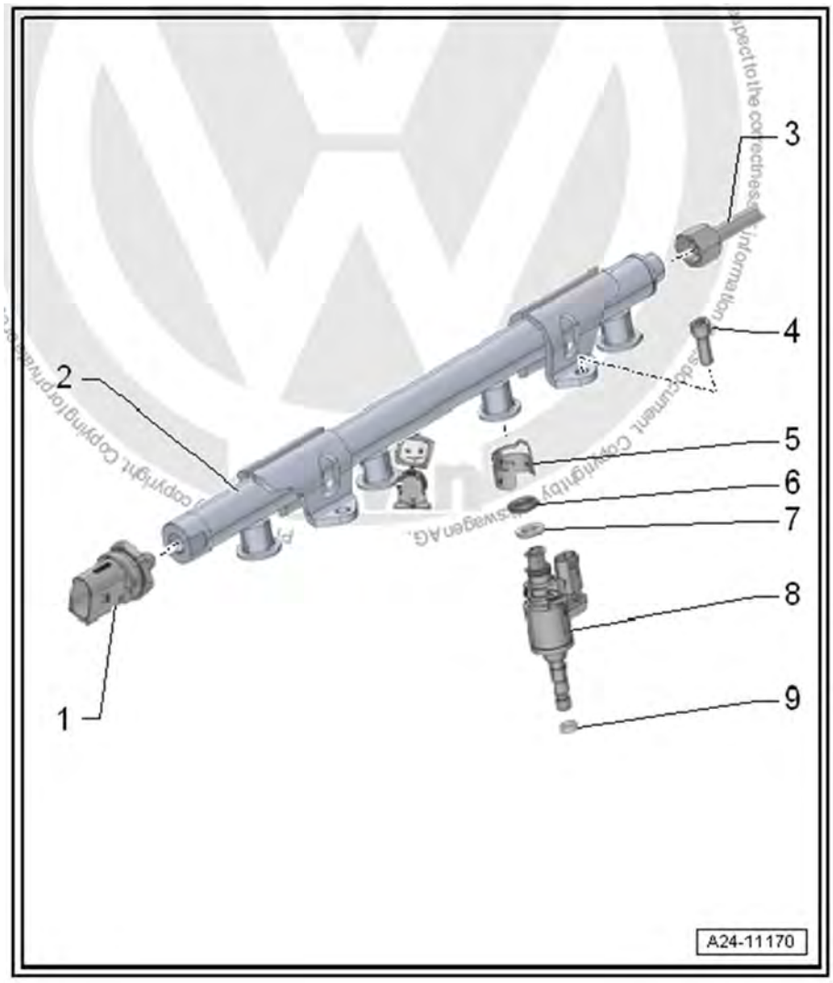

Figure 89

The ’574 patent Accused Instrumentalities comprise a feed back controller adapted to receive the error value and to generate a feed back control signal.

For example, the ECM (J623) is a feed back controller) adapted to receive the error value and generate a feed back control signal.

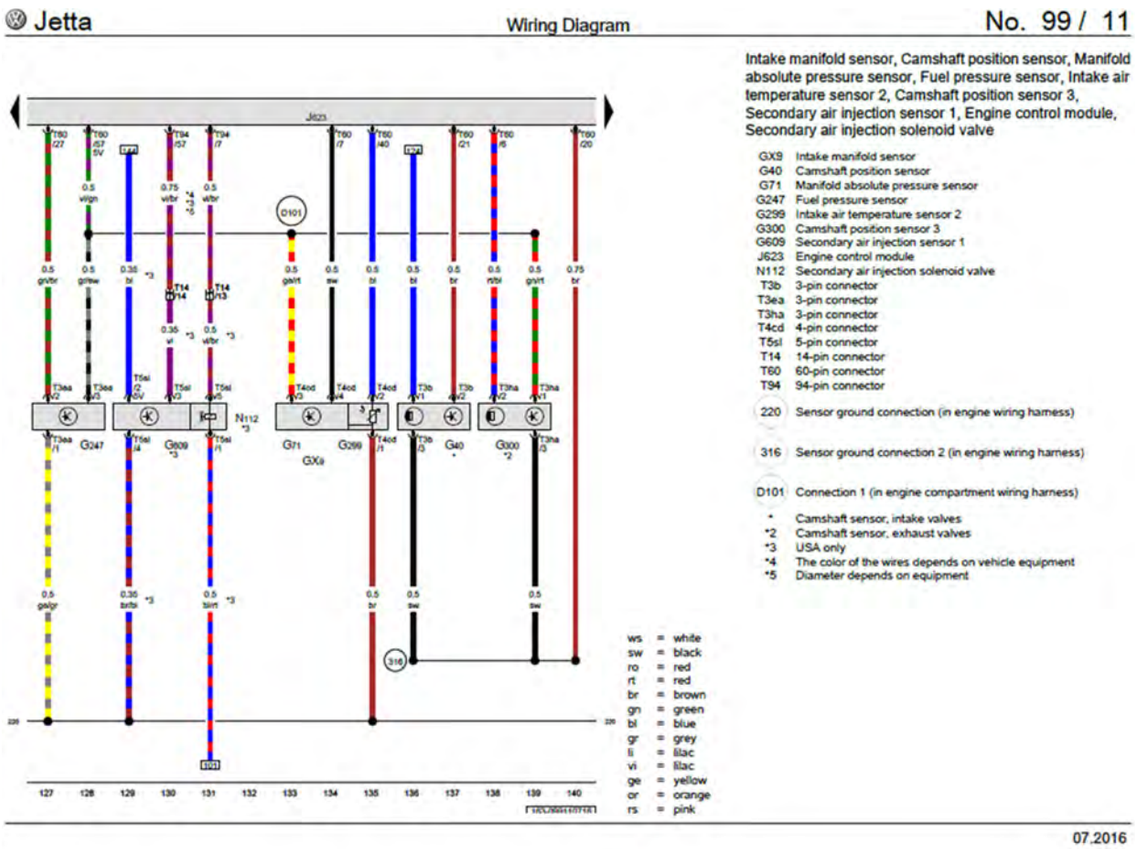

Figure 90

The ’574 patent Accused Instrumentalities comprise a second summing junction adapted to receive the feed back control signal from said feed back controller and the feed forward control signal from the feed forward controller and to modify the fuel pump motor control parameters of the feed forward control signal based upon the feed back control signal to generate a motor controller signal.

For example, the ECM (J623) shown below is a feed back controller and a feed forward controller.

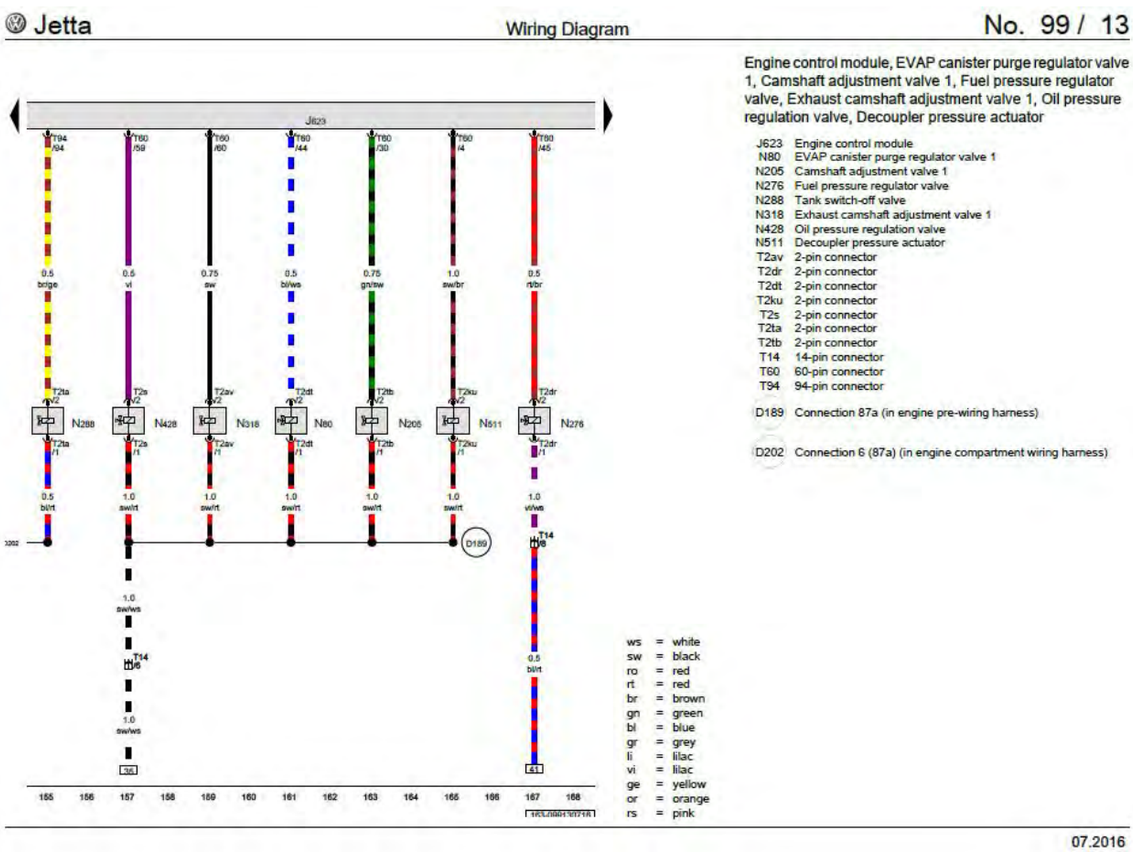

For example, as shown below, the fuel pump control module (J538) is a feed forward controller and a feed back controller which modifies the fuel pump motor control parameters of the feed forward control signal based upon the feed back control signal to generate a motor controller signal.

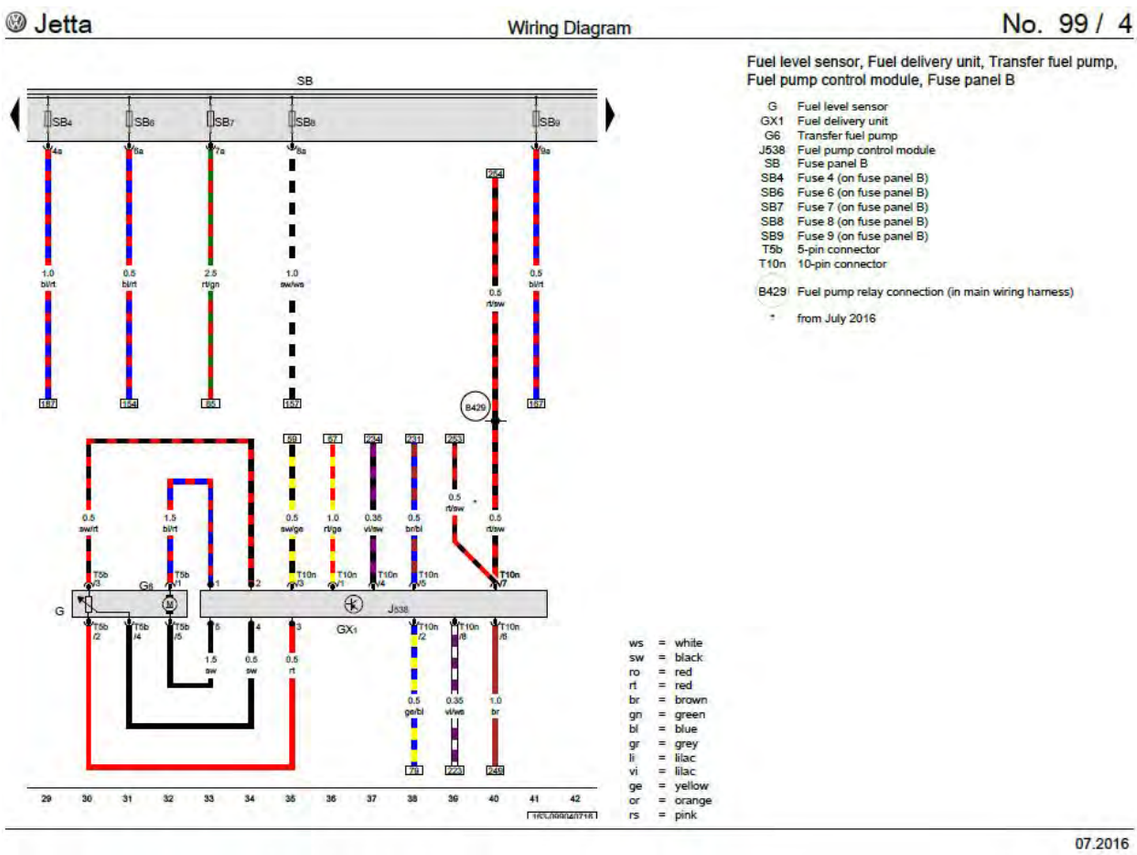

The fuel (rail) pressure sensor (2) installed on the fuel cylinder (fuel rail) and the fuel pressure regulator valve (N276) deliver the modified feed forward control signal based upon the error signal (received from the ECM (J623)) thereby generating a motor controller signal and sending the motor control signal to the fuel pump motor controlled by the fuel pump motor control module (J538). This is accomplished via the fuel delivery unit (GX1) with the fuel pump (G6) with the fuel pump control module (J538).

Figure 91

he ’574 patent Accused Instrumentalities comprise a fuel pump motor controller driver adapted to receive the motor controller signal and to control the speed of said fuel pump based upon the motor controller signal.

For example, the fuel pump motor controller (J538) (shown below) driver is adapted to receive the motor controller signal (from the ECM (J623) shown above) and to control the speed of said fuel pump based on the motor control signal.

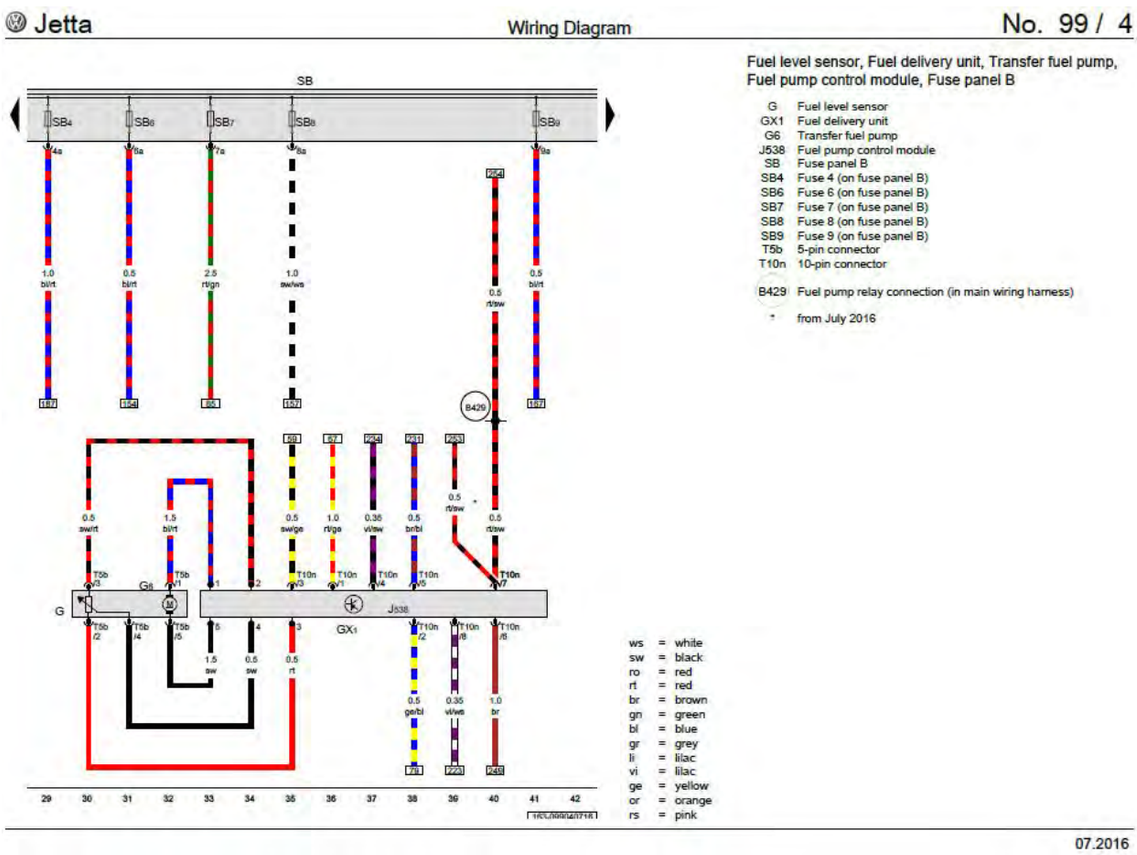

Based upon the totality of the foregoing evidence, and based further upon information and belief, the ’574 patent Accused Instrumentalities include a fuel delivery system comprising: a fuel rail adapted to deliver fuel to fuel injectors of an automotive vehicle, a fuel pump adapted to deliver fuel to said fuel rail, a fuel pressure sensor adapted to measure the fuel rail pressure, a low-pass filter adapted to filter the output of said fuel pressure sensor to filter out pulses due to the opening and closing of the fuel injectors, and a fuel pump motor controller having: a feed forward controller adapted to provide a feed forward signal having fuel pump motor control parameters based upon a set-point fuel pressure and the average fuel flow through said system; a first summing junction adapted to compare the fuel rail pressure to the set-point fuel pressure and to generate an error value based upon the difference between the fuel rail pressure and the set-point fuel pressure; a feed back controller adapted to receive the error value and to generate a feed back control signal; a second summing junction adapted to receive the feed back control signal from said feed back controller and the feed forward control signal from the feed forward controller and to modify the fuel pump motor control parameters of the feed forward control signal based upon the feed back control signal to generate a motor controller signal; and a fuel pump motor controller driver adapted to receive the motor controller signal and to control the speed of said fuel pump based upon the motor controller signal.

Figure 92

COUNT XIII – INFRINGEMENT OF U.S. PATENT NO. 6,609,497

95. The allegations set forth in the foregoing paragraphs 1 through 94 are incorporated into this Thirteenth Claim for Relief.

96. On August 26, 2003, U.S. Patent No. 6,609,497 ("the '497 patent"), entitled "Method for Determining MBT Timing in an Internal Combustion Engine," was duly and legally issued by the United States Patent and Trademark Office. A true and correct copy of the '497 patent is attached as Exhibit 13.

97. Plaintiff is the assignee and owner of the right, title and interest in and to the '497 patent, including the right to assert all causes of action arising under said patents and the right to any remedies for infringement of them.

98. Upon information and belief, Defendants have directly infringed at least claim 1 of the '497 patent by making, using, selling, importing and/or providing and causing to be used the 2012-2018 Tiguan, 2012-2018 Audi A3, 2012-2018 Audi A4, 2012-2018 Audi A5, 2012-2018 Audi A6, 2016-2018 Audi TT, 2015-2018 Audi S3, 2015-2018 VW Golf, 2012-2018 VW Golf GTI, 2015-2018 VW Golf R, 2015-2018 Golf Sportwagon, 2013-2018 Jetta GLI, 2014-2018 VW Jetta Sedan, 2014-2018 VW Passat, 2012-2017 WV CC, 2012-2018 VW Beetle, 2018 VW Atlas, 2015- 2018 Audi Q3, 2012-2018 Audi Q5, and 2017-2018 Porsche Macan with the EA888 engines (the "'497 patent Accused Instrumentalities").

99. In particular, claim 1 of the '497 patent recites a method of controlling an internal combustion engine, said engine having at least one cylinder, said method comprising the steps of: measuring the combustion pressure in said at least one cylinder at at least two discrete times during a combustion cycle; calculating a net combustion pressure change in said at least one cylinder based on said measured combustion pressures; calculating the second derivative of said net combustion pressure change; calculating the maximum acceleration point of said net

combustion pressure change from said second derivative of said net combustion pressure change; and varying the spark timing of said engine until said maximum acceleration point is aligned with top dead center to achieve maximum braking torque spark timing.

100. On information and belief, the ’497 patent Accused Instrumentalities infringe claim 1 of the ’497 patent. The ’497 patent Accused Instrumentalities practice a method of controlling an internal combustion engine (*Figure 93*), said engine having at least one cylinder (*Figure 93*), said method comprising the steps of: measuring the combustion pressure in said at least one cylinder at at least two discrete times during a combustion cycle (*Figure 94*); calculating a net combustion pressure change in said at least one cylinder based on said measured combustion pressures (*Figure 95*) calculating the second derivative of said net combustion pressure change *(Figure 96*); calculating the maximum acceleration point of said net combustion pressure change from said second derivative of said net combustion pressure change (*Figure 97*); and varying the spark timing of said engine until said maximum acceleration point is aligned with top dead center to achieve maximum braking torque spark timing (*Figure 98*).

eSelf-Study Program 920243

The Audi 1.8L and 2.0L Third Generation EA888 Engines

Audi Academy

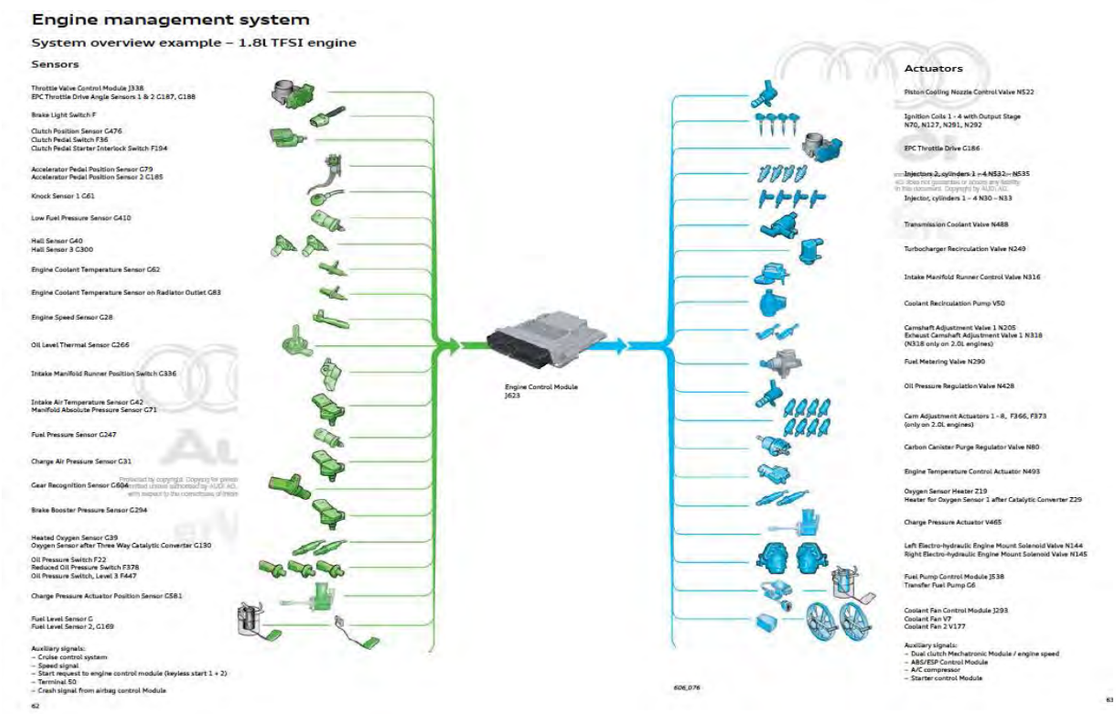

As shown above, the Engine Management System including the Engine Control Module (ECM; J623) controls the Audi 1.8L and 2.0L Third Generation EA888 Engines (internal combustion engine). The ’497 patent Accused Instrumentalities comprise the Audi 1.8L and 2.0L Third Generation EA888 Engines.

Figure 93

The ’497 patent Accused Instrumentalities comprise a method of controlling an internal combustion engine, said engine having at least one cylinder, wherein said method comprises measuring the combustion pressure in said at least one cylinder at least at two discrete times during a combustion cycle. As shown below, DTC P03AF, Cylinder 3 Pressure Too High, utilizes the Knock Control Function to detect Knock Activity (cylinder pressure) at two discrete times during a combustion cycle; it detects (measures) knock in both the main knock window and the pre-knock window (two discrete times).

As shown below, the engine control system comprises the knock sensor. The PCM calculates cylinder combustion pressure as derived from the knock sensor input.

Engine Management

- Electronic engine management system with EPC
- Combined direct and port injection systems*
- Adaptive O_2 sensor control
- Mapped ignition with high voltage ignition coils
- Cylinder-selective adaptive knock control

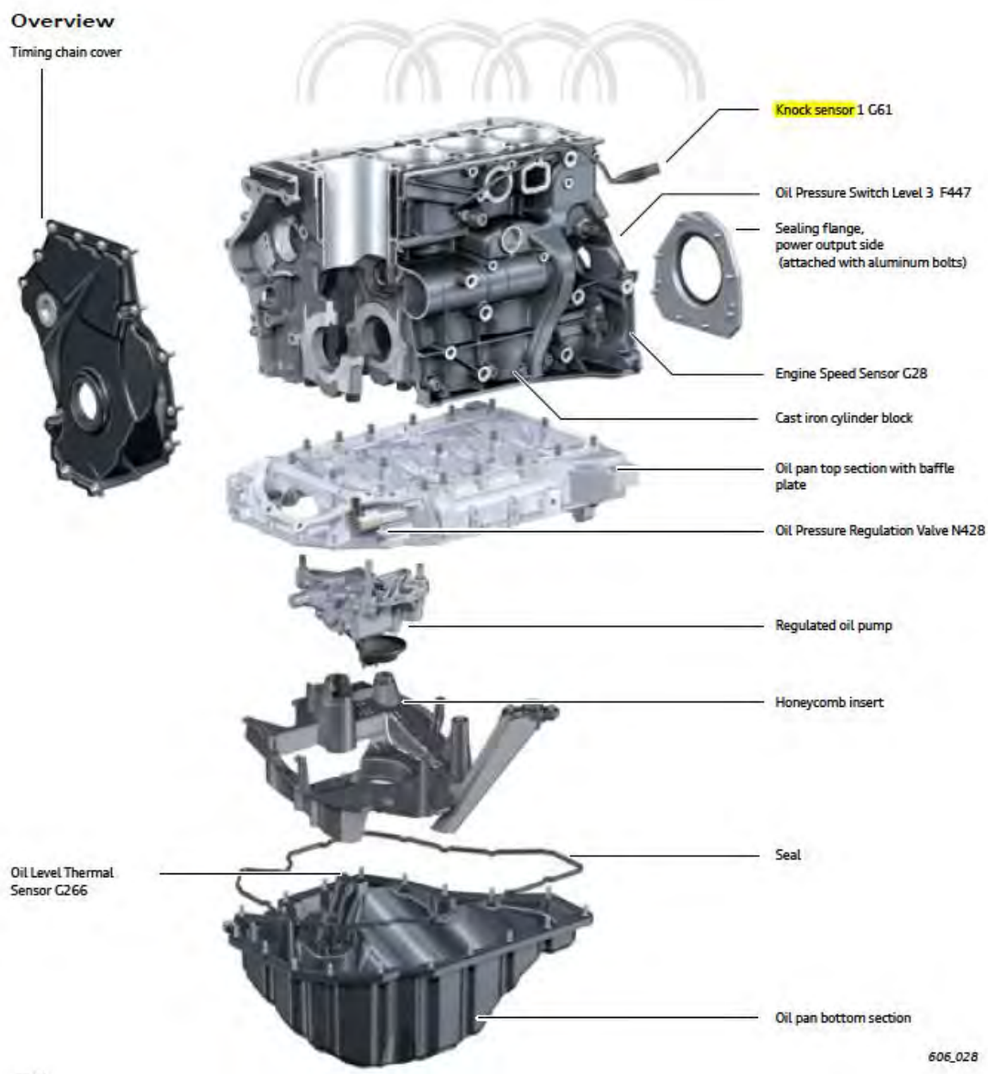
Overview
Timing chain cover
Knock sensor 1 G61
Oil Pressure Switch Level 3 F447
Sealing flange,
power output side
(attached with aluminum bolts)
Engine Speed Sensor G28
Cast iron cylinder block
Oil pan top section with baffle plate
Oil Pressure Regulation Valve N428
Regulated oil pump
Honeycomb insert
Seal
Oil Level Thermal Sensor G266
Oil pan bottom section
606_028

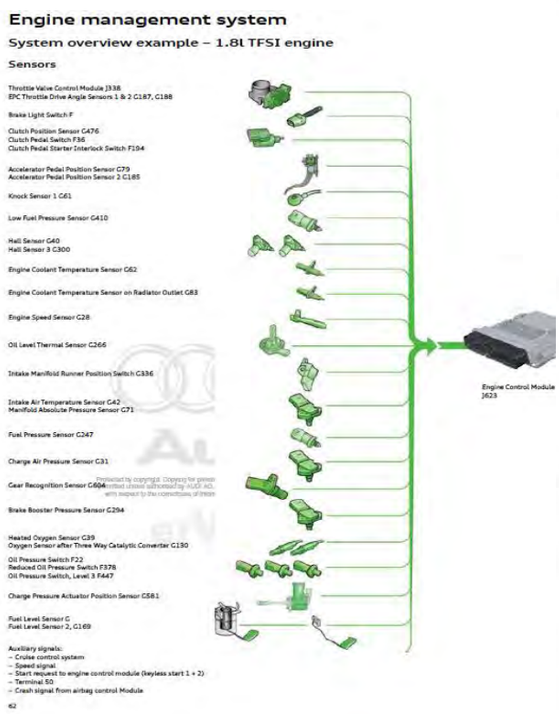

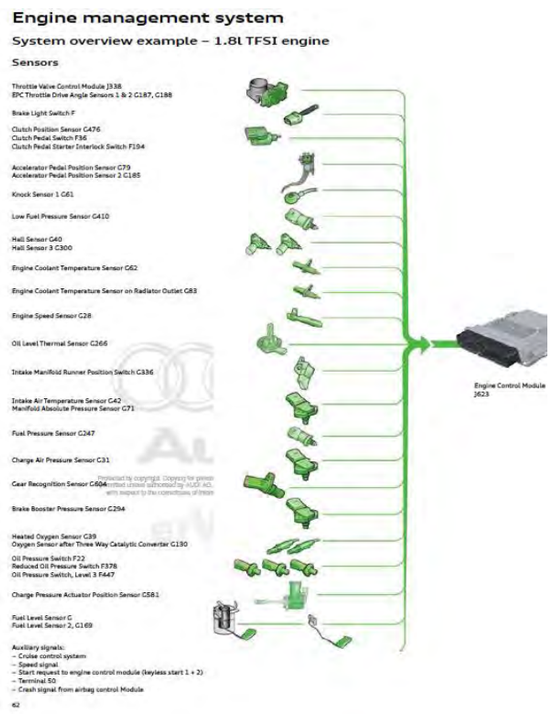

eSelf-Study Program 920243

As shown below, DTC P03AF corresponds to a condition where Cylinder 3 pressure is too high (implying that at least combustion pressure in Cylinder 3 is measured). The PCM calculates combustion pressure derived from the knock sensor input.

2014 Volkswagen Passat Sedan (A32) L4-1.8L Turbo (CPKA)

Vehicle » A L L Diagnostic Trouble Codes (DTC) » Testing and Inspection » P Code Charts » P03AF » Engine Control Module, 2015 MY

ENGINE CONTROL MODULE, 2015 MY

Engine Control Module, 2015 MY

DTC / Description	Monitor Strategy Description	Malfunction Criteria and Threshold Value	Secondary Parameters with Enable Conditions	Monitoring Time Length	MIL Illumination	Component Diagnostic Procedure
		Case 2: Ratio between normalised engine roughness and misfire detection threshold <= n.a. [-] Or Case 3: Ratio between filtered engine roughness and misfire detection threshold <= n.a. [-] Or Ratio between normalised engine roughness and misfire detection threshold <= n.a. [-]				
P03AF Cylinder 3 Pressure Too High	Knock Control Function Check	Slow detection: Ratio between knock sensor and knock threshold in main knock window > 2.0 to 3.0 [-] For time >= 9,000.0 to 11,700.0° CRK Or Ratio between knock sensor and	Engine running ECT @ cylinder block > 60° C Engine speed 1,216 to 6,400 RPM Engine load n.a. % Mass air flow > 403.0 to 501.0 mg/stk	900.0° CRK Continuous	2 DCY	Check the Knock Sensor 1 (G61) . Refer to ⇒ [Knock Sensor 1 (G61), Checking].

P03AF Cylinder 3 Pressure Too High	Knock Control Function Check	Slow detection: Ratio between knock sensor and knock threshold in main knock window > 2.0 to 3.0 [-] For time >= 9,000.0 to 11,700.0° CRK Or Ratio between knock sensor and noise level in pre knock window > 3.50 to 5.0 [-] For time >= 5,760.0 to 6,840.0° CRK Or	Engine running ECT @ cylinder block > 60° C Engine speed 1,216 to 6,400 RPM Engine load n.a. % Mass air flow > 403.0 to 501.0 mg/stk Dynamic engine speed not active Delay time n.a.	900.0° CRK Continuous	2 DCY	Check the Knock Sensor 1 (G61) . Refer to ⇒ [Knock Sensor 1 (G61), Checking].

Zoom Sized for Print

DTC / Description	Monitor Strategy Description	Malfunction Criteria and Threshold Value	Secondary Parameters with Enable Conditions	Monitoring Time Length	MIL illumination	Component Diagnostic Procedure
		Ratio between knock sensor and noise level in pre knock window > 3.50 to 5.0 [-] Ratio between knock sensor and knock threshold in main knock window > 2.0 to 3.0 [-] For time >= 12,960.0 to 16,740.0° CRK Or Torque limitation factor < 0.90 [-]				
		Fast detection: Ratio between knock sensor and knock threshold in main knock window > 1.50 to 2.50 [-] For time >= 540.0° CRK Or Ratio between knock sensor and noise level in pre knock window > 2.75 to 4.50 [-] For time >= 360.0° CRK Case 1: Ratio between filtered engine roughness and misfire detection threshold <= 0.41 to 0.59 [-] Or	Engine running ECT @ cylinder block > 60° C Engine speed 1,216 to 6,400 RPM Engine load n.a. % Mass air flow > 403.0 to 501.0 mg/stk Misfire detection active Dynamic engine speed not active Delay time n.a.			

Zoom Sized for Print

		CRK Or Ratio between knock sensor and noise level in pre knock window > 2.75 to 4.50 [-] For time >= 360.0° CRK Case 1: Ratio between filtered engine roughness and misfire detection threshold <= 0.41 to 0.59 [-] Or	1,216 to 6,400 RPM Engine load n.a. % Mass air flow > 403.0 to 501.0 mg/stk Misfire detection active Dynamic engine speed not active Delay time n.a.			

Zoom Sized for Print

DTC / Description	Monitor Strategy Description	Malfunction Criteria and Threshold Value	Secondary Parameters with Enable Conditions	Monitoring Time Length	MIL Illumination	Component Diagnostic Procedure
		Case 2: Ratio between normalised engine roughness and misfire detection threshold <= n.a. [-] Or Case 3: Ratio between filtered engine roughness and misfire detection threshold <= n.a. [-] Or Ratio between normalised engine roughness and misfire detection threshold <= n.a. [-]				
P0389 Cylinder 4 Pressure Too High	Knock Control Function Check	Slow detection: Ratio between knock sensor and knock threshold in main knock window > 2.0 to 3.0 [-] For time >= 9,000.0 to 11,700.0° CRK Or Ratio between knock sensor and noise level in pre knock window > 3.50 to 5.0 [-] For time >= 5,760.0 to 6,840.0° CRK Or	Engine running ECT @ cylinder block > 60° C Engine speed 1,216 to 6,400 RPM Engine load n.a. % Mass air flow > 403.0 to 501.0 mg/stk Dynamic engine speed not active Delay time n.a.	900.0° CRK Continuous	2 DCY	Check the Knock Sensor 1 (G61) : Refer to ⇒ [Knock Sensor 1 (G61): Checking].

Zoom Sized for Print

ALLDATA

The ECM/PCM detects cylinder pressure as demonstrated by the Diagnostic Trouble Code (DTC) shown above. Based upon information and belief, the cylinder pressure is measured at least at two discrete times during a combustion cycle.

Figure 94

As shown below, DTC P03AF corresponds to a condition where Cylinder 3 pressure is too high (implying that at least combustion pressure in Cylinder 3 is measured). The PCM calculates combustion pressure derived from the knock sensor input. Additionally, the PCM calculates the cylinder pressure (combustion pressure) at two discrete times in both the main knock window and the pre-knock window, the net pressure (difference between second and first discrete combustion pressure measurements) is calculated.

2014 Volkswagen Passat Sedan (A32) L4-1.8L Turbo (CPKA)

Vehicle » A L L Diagnostic Trouble Codes (DTC) » Testing and Inspection » P Code Charts » P03AF » Engine Control Module, 2015 MY

ENGINE CONTROL MODULE, 2015 MY

Engine Control Module, 2015 MY

DTC / Description	Monitor Strategy Description	Malfunction Criteria and Threshold Value	Secondary Parameters with Enable Conditions	Monitoring Time Length	MIL Illumination	Component Diagnostic Procedure
		Case 2: Ratio between normalised engine roughness and misfire detection threshold <= n.a. [-] Or Case 3: Ratio between filtered engine roughness and misfire detection threshold <= n.a. [-] Or Ratio between normalised engine roughness and misfire detection threshold <= n.a. [-]				
P03AF Cylinder 3 Pressure Too High	Knock Control Function Check	Slow detection: Ratio between knock sensor and knock threshold in main knock window > 2.0 to 3.0 [-] For time >= 9,000.0 to 11,700.0° CRK Or Ratio between knock sensor and	Engine running ECT @ cylinder block > 60° C Engine speed 1,216 to 6,400 RPM Engine load n.a. % Mass air flow > 403.0 to 501.0 mg/stk	900.0° CRK Continuous	2 DCY	Check the Knock Sensor 1 (G61) . Refer to ⇒ [Knock Sensor 1 (G61), Checking].

P03AF Cylinder 3 Pressure Too High	Knock Control Function Check	Slow detection: Ratio between knock sensor and knock threshold in main knock window > 2.0 to 3.0 [-] For time >= 9,000.0 to 11,700.0° CRK Or Ratio between knock sensor and noise level in pre knock window > 3.50 to 5.0 [-] For time >= 5,760.0 to 6,840.0° CRK Or	Engine running ECT @ cylinder block > 60° C Engine speed 1,216 to 6,400 RPM Engine load n.a. % Mass air flow > 403.0 to 501.0 mg/stk Dynamic engine speed not active Delay time n.a.	900.0° CRK Continuous	2 DCY	Check the Knock Sensor 1 (G61) . Refer to ⇒ Knock Sensor 1 (G61), Checking .

Zoom Sized for Print

DTC / Description	Monitor Strategy Description	Malfunction Criteria and Threshold Value	Secondary Parameters with Enable Conditions	Monitoring Time Length	MIL illumination	Component Diagnostic Procedure
		Ratio between knock sensor and noise level in pre knock window > 3.50 to 5.0 [-] Ratio between knock sensor and knock threshold in main knock window > 2.0 to 3.0 [-] For time >= 12,960.0 to 16,740.0° CRK Or Torque limitation factor < 0.90 [-]				
		Fast detection: Ratio between knock sensor and knock threshold in main knock window > 1.50 to 2.50 [-] For time >= 540.0° CRK Or Ratio between knock sensor and noise level in pre knock window > 2.75 to 4.50 [-] For time >= 360.0° CRK Case 1: Ratio between filtered engine roughness and misfire detection threshold <= 0.41 to 0.59 [-] Or	Engine running ECT @ cylinder block > 60° C Engine speed 1,216 to 6,400 RPM Engine load n.a. % Mass air flow > 403.0 to 501.0 mg/stk Misfire detection active Dynamic engine speed not active Delay time n.a.			

Zoom Sized for Print

		CRK Or Ratio between knock sensor and noise level in pre knock window > 2.75 to 4.50 [-] For time >= 360.0° CRK Case 1: Ratio between filtered engine roughness and misfire detection threshold <= 0.41 to 0.59 [-] Or	1,216 to 6,400 RPM Engine load n.a. % Mass air flow > 403.0 to 501.0 mg/stk Misfire detection active Dynamic engine speed not active Delay time n.a.			

Zoom Sized for Print

DTC / Description	Monitor Strategy Description	Malfunction Criteria and Threshold Value	Secondary Parameters with Enable Conditions	Monitoring Time Length	MIL Illumination	Component Diagnostic Procedure
		Case 2: Ratio between normalised engine roughness and misfire detection threshold <= n.a. [-] Or Case 3: Ratio between filtered engine roughness and misfire detection threshold <= n.a. [-] Or Ratio between normalised engine roughness and misfire detection threshold <= n.a. [-]				
P0389 Cylinder 4 Pressure Too High	Knock Control Function Check	Slow detection: Ratio between knock sensor and knock threshold in main knock window > 2.0 to 3.0 [-] For time >= 9,000.0 to 11,700.0° CRK Or Ratio between knock sensor and noise level in pre knock window > 3.50 to 5.0 [-] For time >= 5,760.0 to 6,840.0° CRK Or	Engine running ECT @ cylinder block > 60° C Engine speed 1,216 to 6,400 RPM Engine load n.a. % Mass air flow > 403.0 to 501.0 mg/stk Dynamic engine speed not active Delay time n.a.	900.0° CRK Continuous	2 DCY	Check the Knock Sensor 1 (G61) : Refer to ⇒ [Knock Sensor 1 (G61): Checking].

Zoom Sized for Print

ALLDATA

The ECM/PCM detects cylinder pressure as demonstrated by the Diagnostic Trouble Code (DTC) shown above. Based upon information and belief, the ECM/PCM calculates a net combustion pressure change based on measured combustion pressures in service of achieving maximum brake torque (MBT).

Figure 95

The ’497 patent Accused Instrumentalities practice a method of controlling an internal combustion engine, said engine having at least one cylinder, wherein said method comprises calculating the second derivative of said net combustion pressure change.

2014 Volkswagen Passat Sedan (A32) L4-1.8L Turbo (CPKA)

Vehicle » A L L Diagnostic Trouble Codes (DTC) » Testing and Inspection » P Code Charts » P03AF » Engine Control Module, 2015 MY

ENGINE CONTROL MODULE, 2015 MY

Engine Control Module, 2015 MY

DTC / Description	Monitor Strategy Description	Malfunction Criteria and Threshold Value	Secondary Parameters with Enable Conditions	Monitoring Time Length	MIL Illumination	Component Diagnostic Procedure
		Case 2: Ratio between normalised engine roughness and misfire detection threshold <= n.a. [-] Or Case 3: Ratio between filtered engine roughness and misfire detection threshold <= n.a. [-] Or Ratio between normalised engine roughness and misfire detection threshold <= n.a. [-]				
P03AF Cylinder 3 Pressure Too High	Knock Control Function Check	Slow detection: Ratio between knock sensor and knock threshold in main knock window > 2.0 to 3.0 [-] For time >= 9,000.0 to 11,700.0° CRK Or Ratio between knock sensor and	Engine running ECT @ cylinder block > 60° C Engine speed 1,216 to 6,400 RPM Engine load n.a. % Mass air flow > 403.0 to 501.0 mg/stk	900.0° CRK Continuous	2 DCY	Check the Knock Sensor 1 (G61) . Refer to ⇒ [Knock Sensor 1 (G61), Checking].

P03AF Cylinder 3 Pressure Too High	Knock Control Function Check	Slow detection: Ratio between knock sensor and knock threshold in main knock window > 2.0 to 3.0 [-] For time >= 9,000.0 to 11,700.0° CRK Or Ratio between knock sensor and noise level in pre knock window > 3.50 to 5.0 [-] For time >= 5,760.0 to 6,840.0° CRK Or	Engine running ECT @ cylinder block > 60° C Engine speed 1,216 to 6,400 RPM Engine load n.a. % Mass air flow > 403.0 to 501.0 mg/stk Dynamic engine speed not active Delay time n.a.	900.0° CRK Continuous	2 DCY	Check the Knock Sensor 1 (G61) . Refer to ⇒ Knock Sensor 1 (G61), Checking .

Zoom Sized for Print

DTC / Description	Monitor Strategy Description	Malfunction Criteria and Threshold Value	Secondary Parameters with Enable Conditions	Monitoring Time Length	MIL illumination	Component Diagnostic Procedure
		Ratio between knock sensor and noise level in pre knock window > 3.50 to 5.0 [-] Ratio between knock sensor and knock threshold in main knock window > 2.0 to 3.0 [-] For time >= 12,960.0 to 16,740.0° CRK Or Torque limitation factor < 0.90 [-]				
		Fast detection: Ratio between knock sensor and knock threshold in main knock window > 1.50 to 2.50 [-] For time >= 540.0° CRK Or Ratio between knock sensor and noise level in pre knock window > 2.75 to 4.50 [-] For time >= 360.0° CRK Case 1: Ratio between filtered engine roughness and misfire detection threshold <= 0.41 to 0.59 [-] Or	Engine running ECT @ cylinder block > 60° C Engine speed 1,216 to 6,400 RPM Engine load n.a. % Mass air flow > 403.0 to 501.0 mg/stk Misfire detection active Dynamic engine speed not active Delay time n.a.			

Zoom Sized for Print

		CRK Or Ratio between knock sensor and noise level in pre knock window > 2.75 to 4.50 [-] For time >= 360.0° CRK Case 1: Ratio between filtered engine roughness and misfire detection threshold <= 0.41 to 0.59 [-] Or	1,216 to 6,400 RPM Engine load n.a. % Mass air flow > 403.0 to 501.0 mg/stk Misfire detection active Dynamic engine speed not active Delay time n.a.			

Zoom Sized for Print

DTC / Description	Monitor Strategy Description	Malfunction Criteria and Threshold Value	Secondary Parameters with Enable Conditions	Monitoring Time Length	MIL Illumination	Component Diagnostic Procedure
		Case 2: Ratio between normalised engine roughness and misfire detection threshold <= n.a. [-] Or Case 3: Ratio between filtered engine roughness and misfire detection threshold <= n.a. [-] Or Ratio between normalised engine roughness and misfire detection threshold <= n.a. [-]				
P0389 Cylinder 4 Pressure Too High	Knock Control Function Check	Slow detection: Ratio between knock sensor and knock threshold in main knock window > 2.0 to 3.0 [-] For time >= 9,000.0 to 11,700.0° CRK Or Ratio between knock sensor and noise level in pre knock window > 3.50 to 5.0 [-] For time >= 5,760.0 to 6,840.0° CRK Or	Engine running ECT @ cylinder block > 60° C Engine speed 1,216 to 6,400 RPM Engine load n.a. % Mass air flow > 403.0 to 501.0 mg/stk Dynamic engine speed not active Delay time n.a.	900.0° CRK Continuous	2 DCY	Check the Knock Sensor 1 (G61) : Refer to ⇒ [Knock Sensor 1 (G61): Checking].

Zoom Sized for Print

ALLDATA

The ECM/PCM has the ability to detect cylinder pressure at two discrete times as demonstrated by the Diagnostic Trouble Code (DTC) shown above. Based upon information and belief, the ECM/PCM calculates a second derivative of said net combustion pressure change.

Figure 96

The ’497 patent Accused Instrumentalities comprise a method of controlling an internal combustion engine, said engine having at least one cylinder, wherein said method comprises calculating the maximum acceleration point of said net combustion pressure change from said second derivative of said net combustion pressure change.

2014 Volkswagen Passat Sedan (A32) L4-1.8L Turbo (CPKA)

Vehicle » A L L Diagnostic Trouble Codes (DTC) » Testing and Inspection » P Code Charts » P03AF » Engine Control Module, 2015 MY

ENGINE CONTROL MODULE, 2015 MY

Engine Control Module, 2015 MY

DTC / Description	Monitor Strategy Description	Malfunction Criteria and Threshold Value	Secondary Parameters with Enable Conditions	Monitoring Time Length	MIL Illumination	Component Diagnostic Procedure
		Case 2: Ratio between normalised engine roughness and misfire detection threshold <= n.a. [-] Or Case 3: Ratio between filtered engine roughness and misfire detection threshold <= n.a. [-] Or Ratio between normalised engine roughness and misfire detection threshold <= n.a. [-]				
P03AF Cylinder 3 Pressure Too High	Knock Control Function Check	Slow detection: Ratio between knock sensor and knock threshold in main knock window > 2.0 to 3.0 [-] For time >= 9,000.0 to 11,700.0° CRK Or Ratio between knock sensor and	Engine running ECT @ cylinder block > 60° C Engine speed 1,216 to 6,400 RPM Engine load n.a. % Mass air flow > 403.0 to 501.0 mg/stk	900.0° CRK Continuous	2 DCY	Check the Knock Sensor 1 (G61) . Refer to ⇒ [Knock Sensor 1 (G61), Checking].

P03AF Cylinder 3 Pressure Too High	Knock Control Function Check	Slow detection: Ratio between knock sensor and knock threshold in main knock window > 2.0 to 3.0 [-] For time >= 9,000.0 to 11,700.0° CRK Or Ratio between knock sensor and noise level in pre knock window > 3.50 to 5.0 [-] For time >= 5,760.0 to 6,840.0° CRK Or	Engine running ECT @ cylinder block > 60° C Engine speed 1,216 to 6,400 RPM Engine load n.a. % Mass air flow > 403.0 to 501.0 mg/stk Dynamic engine speed not active Delay time n.a.	900.0° CRK Continuous	2 DCY	Check the Knock Sensor 1 (G61) . Refer to ⇒ Knock Sensor 1 (G61), Checking .

Zoom Sized for Print

DTC / Description	Monitor Strategy Description	Malfunction Criteria and Threshold Value	Secondary Parameters with Enable Conditions	Monitoring Time Length	MIL illumination	Component Diagnostic Procedure
		Ratio between knock sensor and noise level in pre knock window > 3.50 to 5.0 [-] Ratio between knock sensor and knock threshold in main knock window > 2.0 to 3.0 [-] For time >= 12,960.0 to 16,740.0° CRK Or Torque limitation factor < 0.90 [-]				
		Fast detection: Ratio between knock sensor and knock threshold in main knock window > 1.50 to 2.50 [-] For time >= 540.0° CRK Or Ratio between knock sensor and noise level in pre knock window > 2.75 to 4.50 [-] For time >= 360.0° CRK Case 1: Ratio between filtered engine roughness and misfire detection threshold <= 0.41 to 0.59 [-] Or	Engine running ECT @ cylinder block > 60° C Engine speed 1,216 to 6,400 RPM Engine load n.a. % Mass air flow > 403.0 to 501.0 mg/stk Misfire detection active Dynamic engine speed not active Delay time n.a.			

Zoom Sized for Print

		CRK Or Ratio between knock sensor and noise level in pre knock window > 2.75 to 4.50 [-] For time >= 360.0° CRK Case 1: Ratio between filtered engine roughness and misfire detection threshold <= 0.41 to 0.59 [-] Or	1,216 to 6,400 RPM Engine load n.a. % Mass air flow > 403.0 to 501.0 mg/stk Misfire detection active Dynamic engine speed not active Delay time n.a.			

Zoom Sized for Print

DTC / Description	Monitor Strategy Description	Malfunction Criteria and Threshold Value	Secondary Parameters with Enable Conditions	Monitoring Time Length	MIL Illumination	Component Diagnostic Procedure
		Case 2: Ratio between normalised engine roughness and misfire detection threshold <= n.a. [-] Or Case 3: Ratio between filtered engine roughness and misfire detection threshold <= n.a. [-] Or Ratio between normalised engine roughness and misfire detection threshold <= n.a. [-]				
P0389 Cylinder 4 Pressure Too High	Knock Control Function Check	Slow detection: Ratio between knock sensor and knock threshold in main knock window > 2.0 to 3.0 [-] For time >= 9,000.0 to 11,700.0° CRK Or Ratio between knock sensor and noise level in pre knock window > 3.50 to 5.0 [-] For time >= 5,760.0 to 6,840.0° CRK Or	Engine running ECT @ cylinder block > 60° C Engine speed 1,216 to 6,400 RPM Engine load n.a. % Mass air flow > 403.0 to 501.0 mg/stk Dynamic engine speed not active Delay time n.a.	900.0° CRK Continuous	2 DCY	Check the Knock Sensor 1 (G61) : Refer to ⇒ [Knock Sensor 1 (G61): Checking].

Zoom Sized for Print

ALLDATA

The ECM/PCM has the ability to detect cylinder pressure at two discrete times as demonstrated by the Diagnostic Trouble Code (DTC) shown above. Based upon information and belief, the ECM/PCM calculates a maximum acceleration point of a net combustion pressure change from said second derivative of said net combustion pressure change.

Figure 97

The ’497 patent Accused Instrumentalities comprise a method of controlling an internal combustion engine, said engine having at least one cylinder, wherein said method comprises varying the spark timing of said engine until said maximum acceleration point is aligned with top dead center to achieve maximum braking torque spark timing.

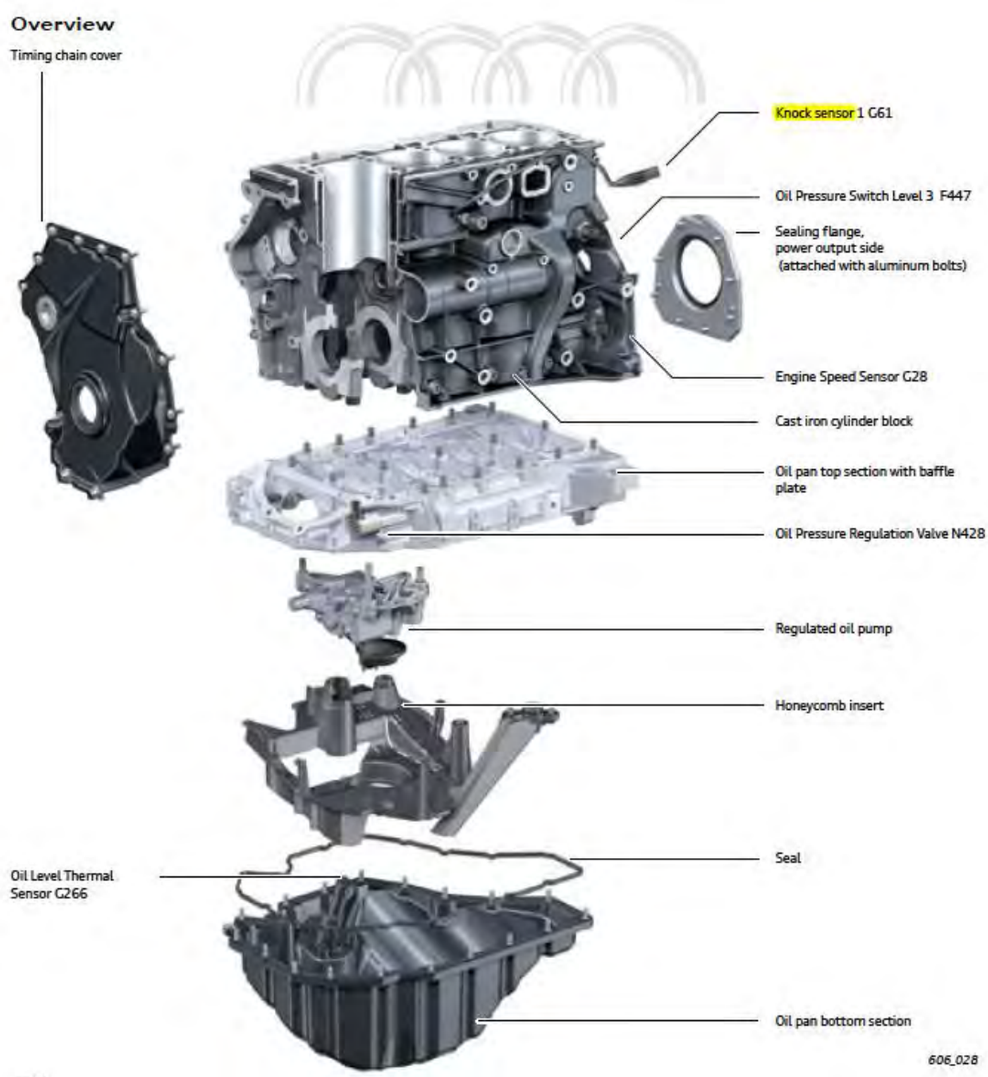

The ECM has the ability to retard ignition timing (vary spark timing) based on knock detection as this has been the state of the art for quite some time. Based upon information and belief, the ECM varies the spark timing of the engine until the maximum acceleration point is aligned with top dead center to achieve maximum braking torque spark timing.

Figure 98

Based upon the totality of the foregoing evidence, and based further upon information and belief, the ’497 patent Accused Instrumentalities practice “a method of controlling an internal combustion engine, said engine having at least one cylinder, said method comprising the steps of: measuring the combustion pressure in said at least one cylinder at at least two discrete times during a combustion cycle; calculating a net combustion pressure change in said at least one cylinder based on said measured combustion pressures; calculating the second derivative of said net combustion pressure change; calculating the maximum acceleration point of said net combustion pressure change from said second derivative of said net combustion pressure change;

and varying the spark timing of said engine until said maximum acceleration point is aligned with top dead center to achieve maximum braking torque spark timing."

COUNT XIV – INVIIIFRINGEMENT OF U.S. PATENT NO. 6,571,157

101. The allegations set forth in the foregoing paragraphs 1 through 100 are incorporated into this Fourteenth Claim for Relief.

102. On May 23, 2003, U.S. Patent No. 6,571,157 ("the '157 patent"), entitled "Oil Pressure Diagnostic Strategy for a Hybrid Electric Vehicle," was duly and legally issued by the United States Patent and Trademark Office. A true and correct copy of the '157 patent is attached as Exhibit 14.

103. Plaintiff is the assignee and owner of the right, title and interest in and to the '157 patent, including the right to assert all causes of action arising under said patents and the right to any remedies for infringement of them.

104. Upon information and belief, Defendants have directly infringed at least claims 1 and 14 of the '157 patent by making, using, selling, importing and/or providing and causing to be used the 2013-2017 Volkswagen Jetta Hybrid and 2016-2018 Audi A3 Sportback e-tron (the "'157 patent Accused Instrumentalities").

105. In particular, claim 1 of the '157 patent recites a diagnostic system for controlling an engine low oil pressure indicator in a hybrid electric vehicle, comprising: a powertrain having an engine and an electric traction motor; an oil pressure sensor/sending unit mechanically connected to the engine; an engine speed sensor/sending unit mechanically connected to the engine; a controller having connections to the oil pressure sensor and engine speed sensor; a low oil pressure indicator electrically connected to the controller; a mode selector having modes for "off" and "run/start"; and the controller configured to prevent activation of the low oil pressure indicator when the mode selector is in the "run/start" mode and the engine is not running.

106. On information and belief, the ’157 patent Accused Instrumentalities infringe claim 1 of the ’157 patent. The ’157 patent Accused Instrumentalities comprise a diagnostic system for controlling an engine low oil pressure indicator in a hybrid electric vehicle (*Figure 99*), comprising: a powertrain having an engine and an electric traction motor (*Figure 100*); an oil pressure sensor/sending unit mechanically connected to the engine (*Figure 101*); an engine speed sensor/sending unit mechanically connected to the engine (*Figure 102*); a controller having connections to the oil pressure sensor and engine speed sensor (*Figure 103*); a low oil pressure indicator electrically connected to the controller (*Figure 104*); a mode selector having modes for “off” and “run/start” (*Figure 105*); and the controller configured to prevent activation of the low oil pressure indicator when the mode selector is in the “run/start” mode and the engine is not running (*Figure 106*).

As demonstrated in the exemplary images below, the ’157 patent Accused Instrumentalities comprise a data bus diagnostic interface, which controls an engine low oil pressure indicator via the CAN data Bus, Engine Control Module (ECM), and dash panel.

Audi eTron dashboard engine oil pressure indicator example from the owner’s manual

Audi A3 Wiring Diagram No. 4 / 14

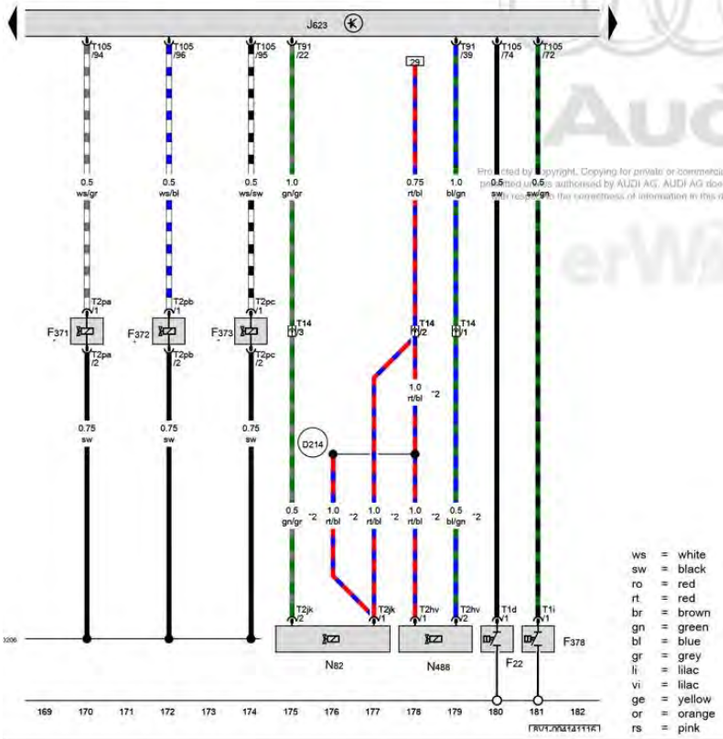

Oil pressure switch, Cam adjustment actuator 6, Cam adjustment actuator 7, Cam adjustment actuator 8, Reduced oil pressure switch, Engine control module, Coolant shut-off valve, Transmission coolant valve

F22	Oil pressure switch
F371	Cam adjustment actuator 6
F372	Cam adjustment actuator 7
F373	Cam adjustment actuator 8
F378	Reduced oil pressure switch
J623	Engine control module
N82	Coolant shut-off valve
N488	Transmission coolant valve
T1d	1-pin connector
T1i	1-pin connector
T2hv	2-pin connector
T2jk	2-pin connector
T2pa	2-pin connector
T2pb	2-pin connector
T2pc	2-pin connector
T14	14-pin connector
T91	91-pin connector
T105	105-pin connector
D206	Connection 87a (in engine pre-wiring harness) 4
D214	Connection 8 (87a) (in engine compartment wiring harness)
*	Only for vehicles without US equipment
*2	Depending on equipment

ws	=	white
sw	=	black
ro	=	red
rt	=	red
br	=	brown
gn	=	green
bl	=	blue
gr	=	grey
li	=	lilac
vi	=	lilac
ge	=	yellow
or	=	orange
rs	=	pink

11.2016

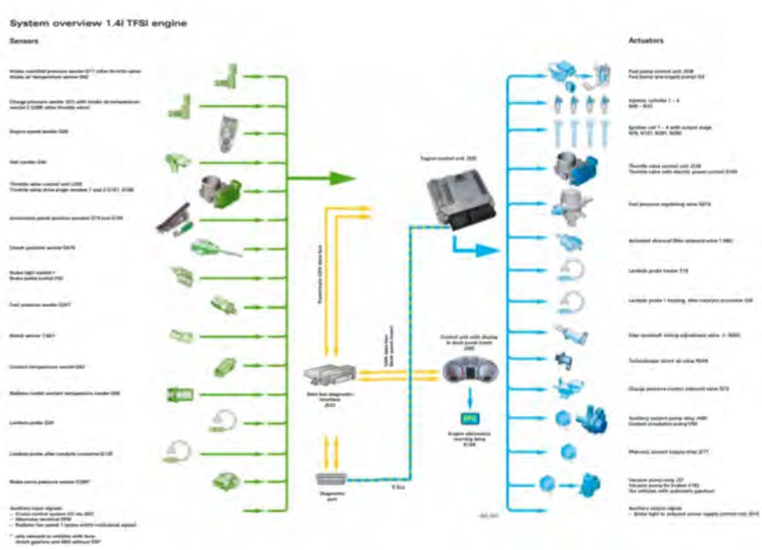

4 Oil Filter/Oil Pressure Switch

⇒ "4.1 Overview - Oil Filter/Oil Pressure Switch", page 309

⇒ "4.3 Oil Pressure Switch F1 / Reduced Oil Pressure Switch F378 , Removing and Installing", page 312

⇒ "4.2 Oil Pressure Switch F22 , Removing and Installing", page 310

⇒ "4.4 Oil Pressure Regulation Valve N428 , Removing and Installing", page 314

⇒ "4.5 Oil Pressure, Checking", page 314

4.1 Overview - Oil Filter/Oil Pressure Switch

1 - Oil Filter

- ❑ See note. Refer to ⇒ page 284 .
- ❑ Removing and installing. Refer to ⇒ Maintenance ; Booklet 821 .
- ❑ Secure loosened oil filter threaded connection. Refer to ⇒ Fig. ""Retainer Threaded Connection for the Oil Filter"" , page 310 .

2 - Oil Pressure Switch

- ❑ 20 Nm

♦ 1.2L TFSI (without oil pressure regulation): Oil Pressure Switch - F1-

♦ 1.4L TFSI (with oil pressure regulation): Reduced Oil Pressure Switch - F378-

- ❑ Switching pressure: 0.3 to 0.6 bar (4.351 to 8.702 psi)
- ❑ Green insulation
- ❑ Check in Guided Fault Finding. Refer to Vehicle Diagnostic Tester .
- ❑ Removing and installing. Refer to ⇒ "4.3 Oil Pressure Switch F1 / Reduced Oil Pressure Switch F378 , Removing and Installing", page 312 .

3 - Seal

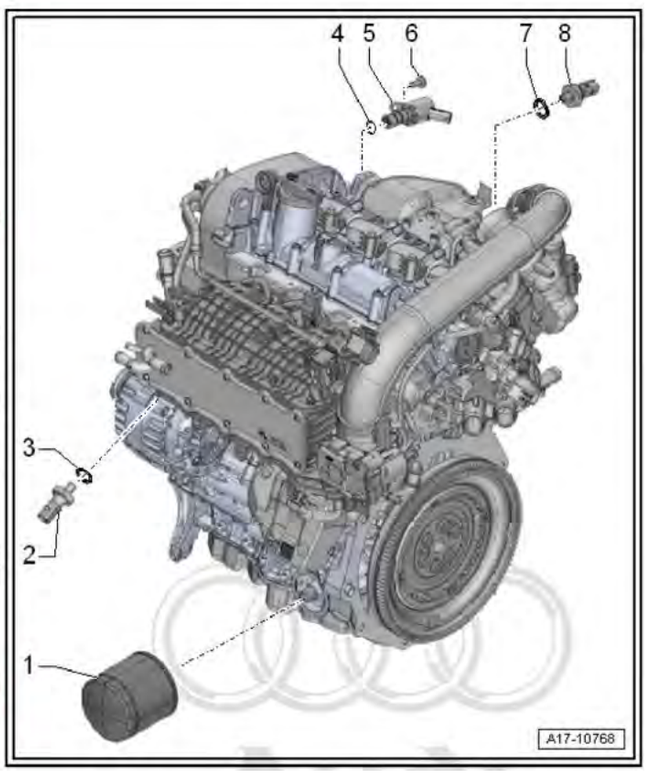

Internal combustion engine

The A3 Sportback e-tron uses the EA211 series 1.4l engine. Because the transmission is 2.26 in (57.5 mm) longer to accommodate the e-machine, the engine is mounted further to the right than in the standard A3 Sportback.

The main bearings, the connecting rod big end bearings and the piston rings of this engine have special coatings. In addition, piston backlash has been adapted and the cylinder liners are plasma-coated.

The Audi A3 Sportback e-tron can be driven in electric-only mode. This can result in periods of time during which the internal combustion engine is not in use.

During electric-only driving, the internal combustion engine can start in order to heat up the catalytic converter.

To ensure wear-free starting of the internal combustion engine after electric-only operation, clutch K0 closes and the e-machine turns the engine over until sufficient oil pressure is obtained.

In the U.S. market, the engine is also equipped with secondary air injection.

Figure 99

As demonstrated in the exemplary images below, the ’157 patent Accused Instrumentalities comprise an electric traction motor (Electro-drive Drive Motor V141).

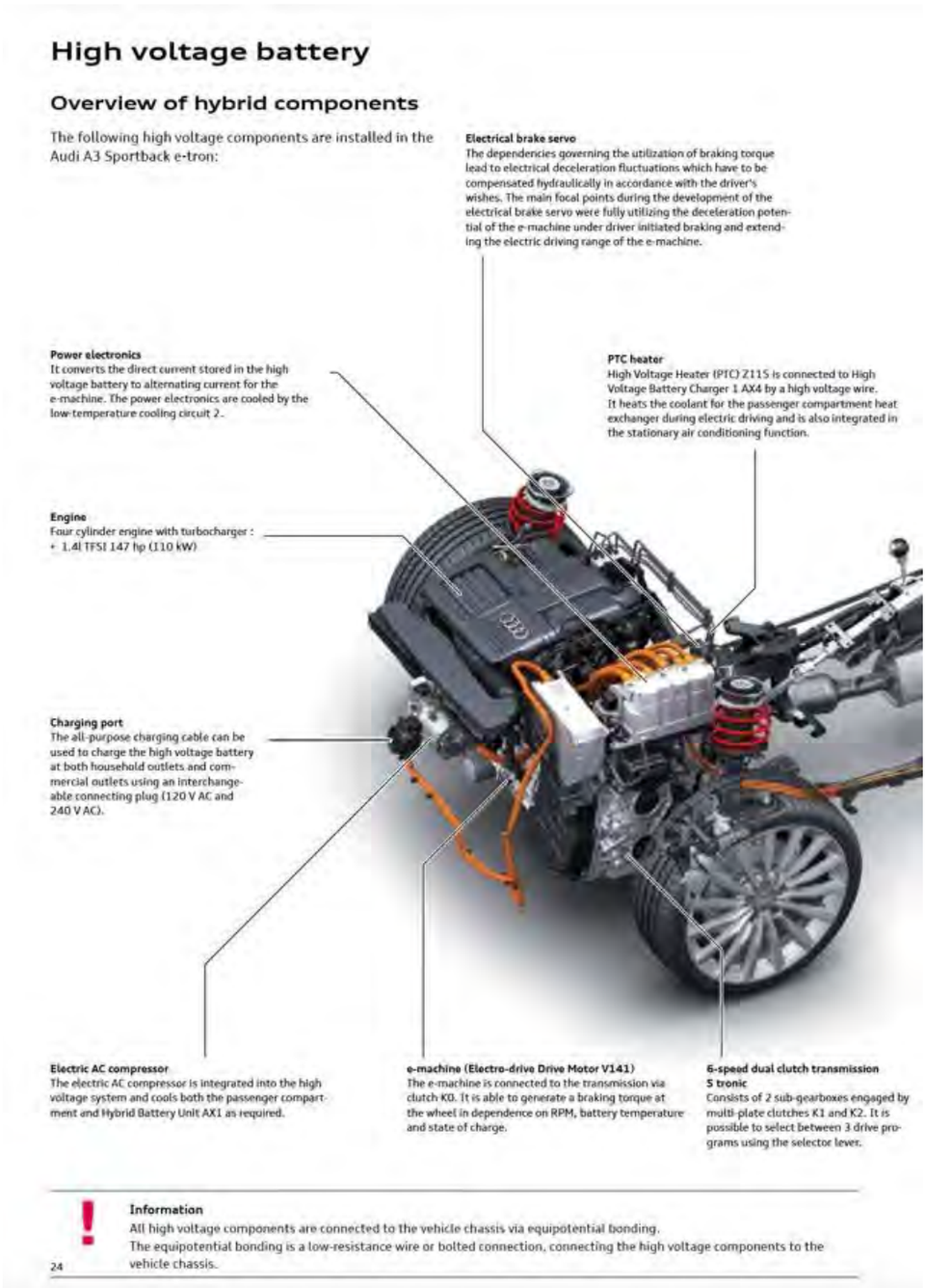

Figure 100

As demonstrated in the exemplary images below, the ’157 patent Accused Instrumentalities comprise an oil pressure sensor/sending unit (# 2) mechanically connected to the engine.

4 Oil Filter/Oil Pressure Switch

⇒ "4.1 Overview - Oil Filter/Oil Pressure Switch", page 309

⇒ "4.3 Oil Pressure Switch F1 / Reduced Oil Pressure Switch F378 , Removing and Installing", page 312

⇒ "4.2 Oil Pressure Switch F22 , Removing and Installing", page 310

⇒ "4.4 Oil Pressure Regulation Valve N428 , Removing and Installing", page 314

⇒ "4.5 Oil Pressure, Checking", page 314

4.1 Overview - Oil Filter/Oil Pressure Switch

1 - Oil Filter
- ❑ See note. Refer to ⇒ page 284 .
- ❑ Removing and installing. Refer to ⇒ Maintenance ; Booklet 821 .
- ❑ Secure loosened oil filter threaded connection. Refer to ⇒ Fig. ""Retainer Threaded Connection for the Oil Filter"" , page 310 .

2 - Oil Pressure Switch
- ❑ 20 Nm
- ♦ 1.2L TFSI (without oil pressure regulation): Oil Pressure Switch - F1-
- ♦ 1.4L TFSI (with oil pressure regulation): Reduced Oil Pressure Switch - F378-
  - ❑ Switching pressure: 0.3 to 0.6 bar (4.351 to 8.702 psi)
  - ❑ Green insulation
  - ❑ Check in Guided Fault Finding. Refer to Vehicle Diagnostic Tester .
  - ❑ Removing and installing. Refer to ⇒ "4.3 Oil Pressure Switch F1 / Reduced Oil Pressure Switch F378 , Removing and Installing", page 312 .

3 - Seal

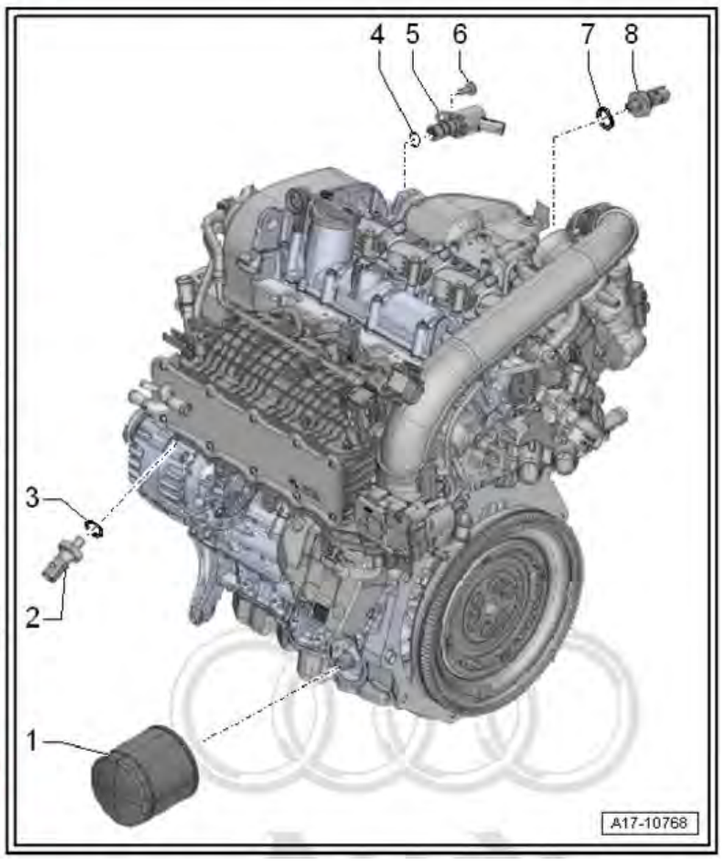

Figure 101

As demonstrated in the exemplary images below, the '157 patent Accused Instrumentalities comprise an engine speed sensor/sending unit (G28) mechanically connected to the engine.

1.1 Overview - Ignition System

1 - Bolt
- 20 Nm
- The tightening specifications affect function of the knock sensor

2 - Knock Sensor 1 - G61-
- Removing and installing. Refer to ⇒ "1.4 Knock Sensor 1 G61 , Removing and Installing", page 543 .

3 - Spark Plug
- Tightening specification. Refer to ⇒ Maintenance ; Booklet 821 .
- Remove and install with the Spark Plug Removal Tool - 3122B- . Refer to ⇒ Maintenance ; Booklet 821 .
- Replacement interval. Refer to ⇒ Maintenance Intervals; Rep. Gr. 03 .

4 - Ignition Coil with Power Output Stage
- Ignition Coil 1 with Power Output Stage - N70-
- Ignition Coil 2 with Power Output Stage - N127-
- Ignition Coil 3 with Power Output Stage - N291-
- Ignition Coil 4 with Power Output Stage - N292-
- Removing and installing. Refer to ⇒ "1.3 Ignition Coils with Power Output Stages, Removing and Installing", page 541 .

5 - Bolt
- 8 Nm

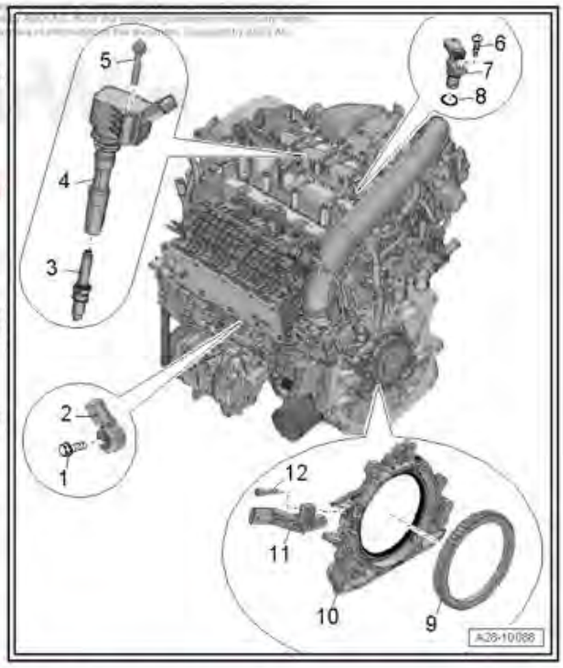

6 - Bolt
- 8 Nm

7 - Camshaft Position Sensor - G40-
- Removing and installing. Refer to ⇒ "1.5 Camshaft Position Sensor, Removing and Installing", page 544 .
- Engine codes CPTA, CZEA, CWLA, CSSA, CUKB, CXUA: also Camshaft Position Sensor 2 - G163-

8 - O-ring
- Replace if damaged

9 - Sensor Wheel
- For the Engine Speed Sensor - G28-
- Unit with sealing flange on the transmission side

10 - Transmission Side Sealing Flange
- Removing and installing. Refer to ⇒ "2.3 Sealing Flange, Removing and Installing, Transmission Side", page 111 .

11 - Engine Speed Sensor - G28-
- Removing and installing. Refer to ⇒ "1.6 Engine Speed Sensor G28 , Removing and Installing", page 547 .

12 - Bolt
- 4.5 Nm

Figure 102

The ’157 patent Accused Instrumentalities comprise a Controller Area Network (CAN), the ECM and have connections to the oil pressure sensor and the engine speed sensor via the ECM.

As implied in the exemplary image immediately below, the oil pressure sender is connected to the ECM (J623).

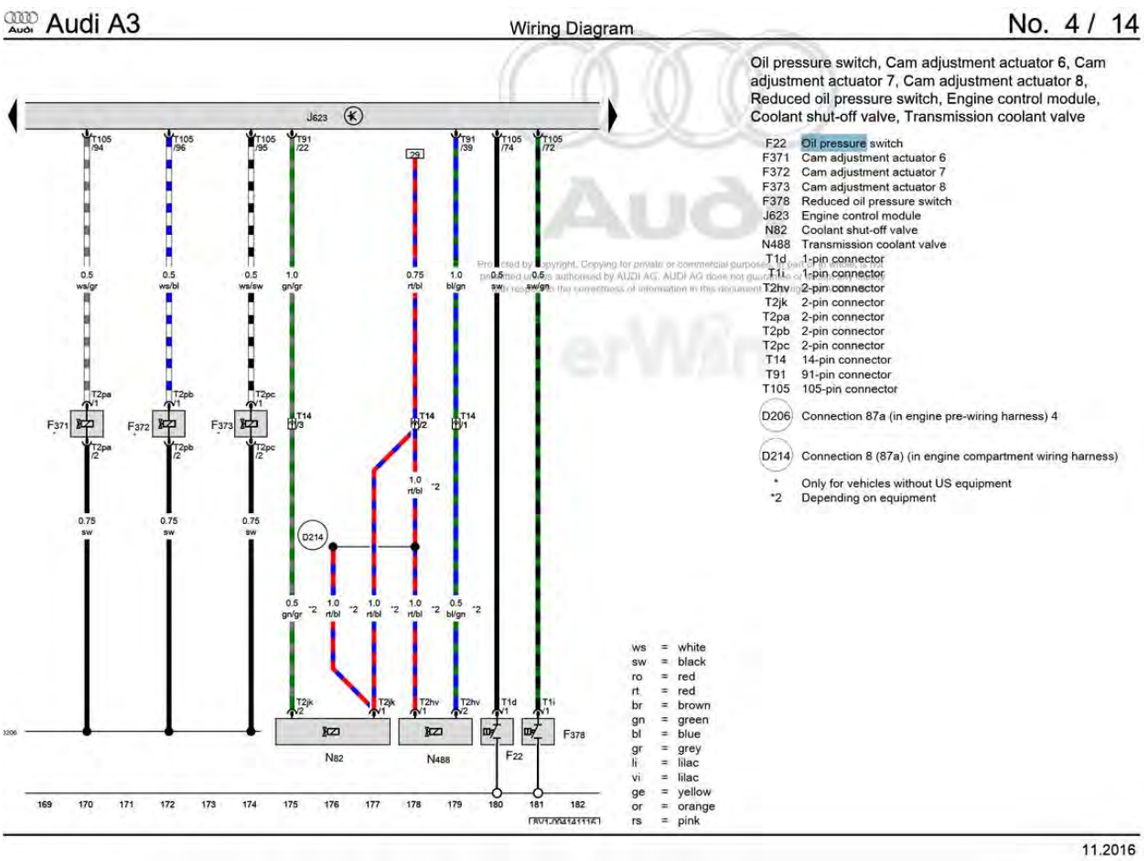

As implied in the exemplary image immediately below, the engine speed sensor is connected to the PCM which receives and evaluates signals and send those signals out on the Controller Area Network (CAN data bus).

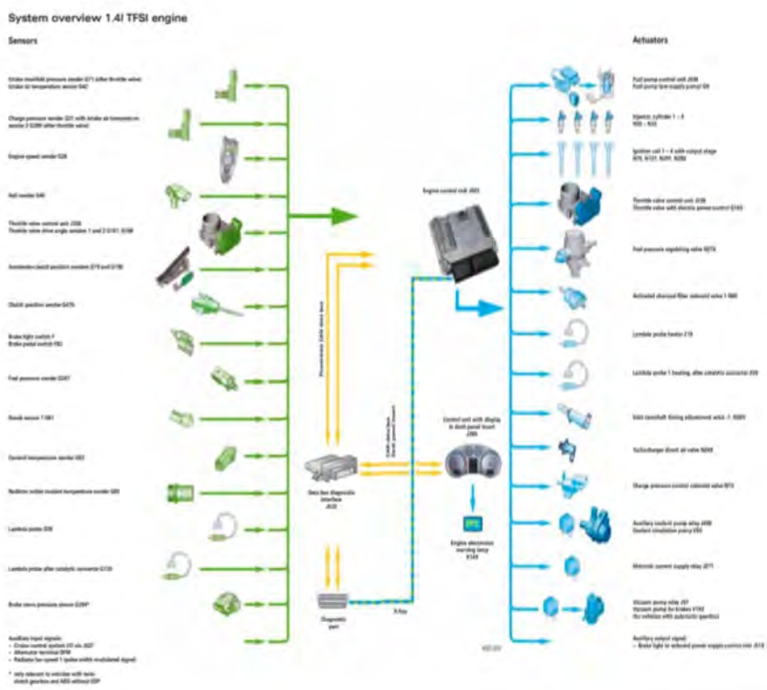

Figure 103

The ’157 patent Accused Instrumentalities comprise the CAN data bus, which is a controller electrically connected to the low oil pressure indicator in the dash panel via the ECM, as shown in the exemplary images below.

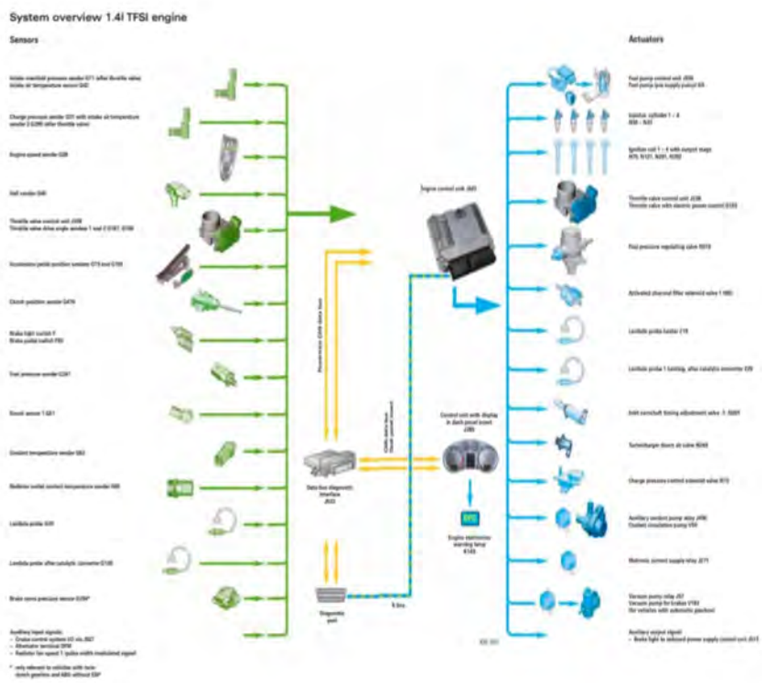

Figure 104

The '157 patent Accused Instrumentalities comprise a mode selector having modes for "off" and "run/start.

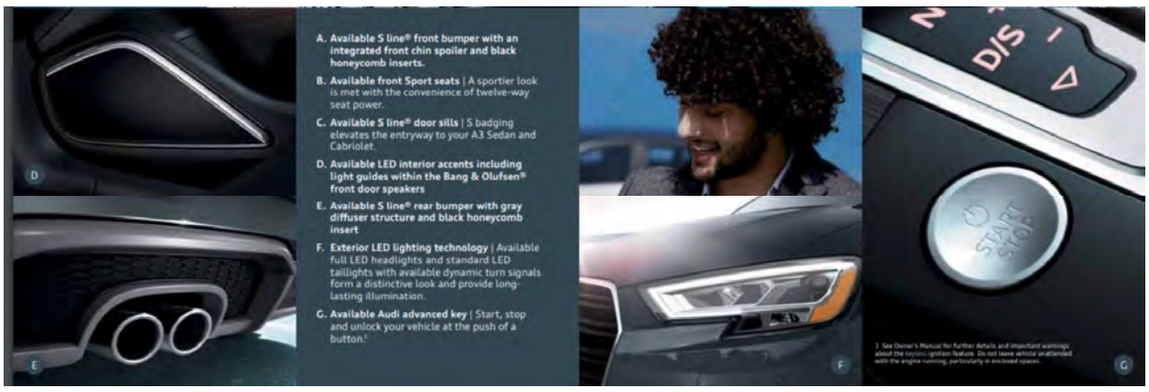

Audi A3 Owner's Manual

Figure 105

As demonstrated in the exemplary images below, the '157 patent Accused Instrumentalities comprise the Hybrid Manager software in the ECM J623 that prevents activation of the low oil pressure indicator when the vehicle comes to a stop (engine auto stop when vehicle in run/start mode) or during electric motor only driving.

Hybrid manager

The software of Engine Control Module J623 has been extended to include the hybrid manager function.

- Operating strategy.
- Torque distribution to Electro-drive Drive Motor V141 and the internal combustion engine.
- High voltage coordinator.
- Recuperation under braking and acceleration.
- Control of the coolant circuits.

The following hybrid-specific functions of the vehicle are controlled by the hybrid manager.

- Control of hybrid displays.
- Power meter.
- Display in dash panel insert.
- MMI energy flow diagrams.
- e-tron statistics.

Internal combustion engine

The A3 Sportback e-tron uses the EA211 series 1.4l engine. Because the transmission is 2.26 in (57.5 mm) longer to accommodate the e-machine, the engine is mounted further to the right than in the standard A3 Sportback.

The main bearings, the connecting rod big end bearings and the piston rings of this engine have special coatings. In addition, piston backlash has been adapted and the cylinder liners are plasma-coated.

The Audi A3 Sportback e-tron can be driven in electric-only mode. This can result in periods of time during which the internal combustion engine is not in use.

During electric-only driving, the internal combustion engine can start in order to heat up the catalytic converter.

To ensure wear-free starting of the internal combustion engine after electric-only operation, clutch K0 closes and the e-machine turns the engine over until sufficient oil pressure is obtained.

In the U.S. market, the engine is also equipped with secondary air injection.

Engine start

The internal combustion engine is started by the e-machine. Unlike the Q5 hybrid quattro, there is no 12V starter motor. Engine Control Module J623 sends a start message to DSG Transmission Mechatronic Module J743. Clutch K0 is closed and connects the e-machine rotor to the internal combustion engine's crankshaft. The rotor brings the engine's crankshaft up to starting speed. J623 then enables the ignition and fuel injection and the engine starts.

If it is necessary for the internal combustion engine to start when the vehicle is running in electric-only mode, the torque from the e-machine is increased by the amount necessary to start the internal combustion engine when the clutch closes. This prevents judder. After starting, clutch K0 is opened and the internal combustion engine runs at no load. After the speed of the internal combustion engine has been adapted to that of the e-machine, clutch K0 is closed again.

Audi A3 Owner's Manual

Figure 106

107. Claim 14 of the '157 patent recites the diagnostic system of claim 1, wherein the low oil pressure indicator comprises a lamp.

108. On information and belief, the '157 patent Accused Instrumentalities infringe claim 14 of the '157 patent. The '157 patent Accused Instrumentalities comprise the diagnostic system of claim 1, wherein the low oil pressure indicator comprises a lamp (*Figure 107*).

As shown below, the '157 patent Accused Instrumentalities comprise a lamp to indicate low oil pressure.

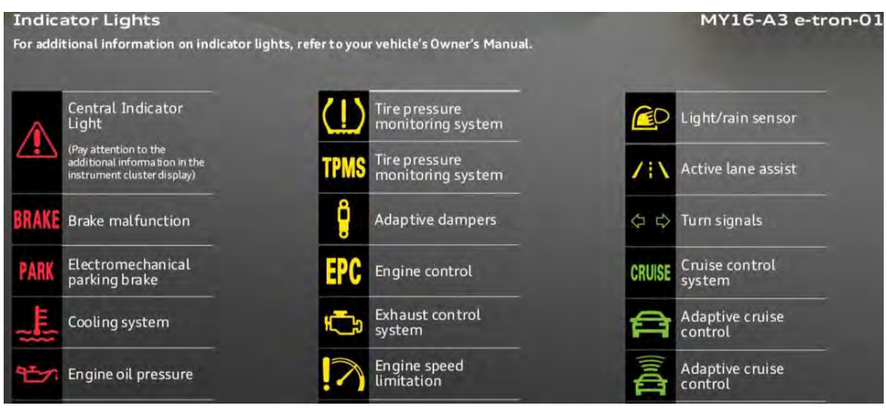

Figure 107

COUNT XV – INFRINGEMENT OF U.S. PATENT NO. 6,736,122

109. The allegations set forth in the foregoing paragraphs 1 through 108 are incorporated into this Fifteenth Claim for Relief.

110. On May 18, 2004, U.S. Patent No. 6,736,122 ("the '122 patent"), entitled "Motor Vehicle Engine Synchronization," was duly and legally issued by the United States Patent and Trademark Office. A true and correct copy of the '122 patent is attached as Exhibit 15.

111. Plaintiff is the assignee and owner of the right, title and interest in and to the '122 patent, including the right to assert all causes of action arising under said patents and the right to any remedies for infringement of them.

112. Upon information and belief, Defendants have directly infringed at least claim 1 of the '122 patent by making, using, selling, importing and/or providing and causing to be used the 2012-2018 Tiguan, 2012-2018 Audi A3, 2012-2018 Audi A4, 2012-2018 Audi A5, 2012-2018 Audi A6, 2016-2018 Audi TT, 2015-2018 Audi S3, 2015-2018 VW Golf, 2012-2018 VW Golf GTI, 2015-2018 VW Golf R, 2015-2018 Golf Sportwagon, 2013-2018 Jetta GLI, 2014-2018 VW Jetta Sedan, 2014-2018 VW Passat, 2012-2017 WV CC, 2012-2018 VW Beetle, 2018 VW Atlas, 2015- 2018 Audi Q3, 2012-2018 Audi Q5, and 2017-2018 Porsche Macan with the EA888 (the "'122 patent Accused Instrumentalities").

113. In particular, claim 1 of the '122 patent recites an internal combustion engine, comprising a number of cylinders, the or each cylinder containing a four-stroke reciprocating piston, an exhaust conduit, one or more engine operating condition sensors including an exhaust gas sensor in the exhaust conduit for measuring the composition of the exhaust gas, a fuel injection system, and an engine management system for controlling the operation of the engine including the fuel injection system and the air/fuel ratio for at least one cylinder, wherein the engine management system contains engine operation data, the engine operation data being related to expected engine operation with engine fueling on the correct stroke and/or engine fueling on an incorrect stroke, and the engine management system is arranged to: a) receive from said sensor(s) respective signal(s); b) oscillate the air/fuel ratio between a relatively rich level

and a relatively lean level, the exhaust gas composition varying depending on the air/fuel ratio; c) reverse the direction of change of the air/fuel ratio when the exhaust gas composition is sensed as being indicative of rich engine operation or lean engine operation; d) determine the temporal characteristics of the oscillation in the air/fuel ratio; and e) determine whether or not the engine is being fueled on the correct stroke by comparing said temporal characteristics with said relevant engine operation data.

114. On information and belief, the ’122 patent Accused Instrumentalities infringe claim 1 of the ’122 patent. The ’122 patent Accused Instrumentalities comprise an internal combustion engine (*Figure 108*), comprising a number of cylinders (*Figure 108*), the or each cylinder containing a four-stroke reciprocating piston (*Figure 108*), an exhaust conduit (*Figure 109*), one or more engine operating condition sensors including an exhaust gas sensor in the exhaust conduit for measuring the composition of the exhaust gas (*Figure 110*), a fuel injection system (*Figures 110-111*), and an engine management system for controlling the operation of the engine including the fuel injection system and the air/fuel ratio for at least one cylinder (*Figure 112*), wherein the engine management system contains engine operation data, the engine operation data being related to expected engine operation with engine fueling on the correct stroke and/or engine fueling on an incorrect stroke (*Figure 112*), and the engine management system (*Figure 112*) is arranged to: a) receive from said sensor(s) respective signal(s) (*Figure 113*); b) oscillate the air/fuel ratio between a relatively rich level and a relatively lean level, the exhaust gas composition varying depending on the air/fuel ratio (*Figure 114*); c) reverse the direction of change of the air/fuel ratio when the exhaust gas composition is sensed as being indicative of rich engine operation or lean engine operation (*Figure 115*); d) determine the temporal characteristics of the oscillation in the air/fuel ratio (*Figure 115*); and e) determine

whether or not the engine is being fueled on the correct stroke by comparing said temporal characteristics with said relevant engine operation data (*Figure 115*).

The ’122 patent Accused Instrumentalities comprise an internal combustion engine, comprising a number of cylinders, the or each cylinder containing a four-stroke reciprocating piston.

The all-new 2018 Volkswagen Tiguan—the second-generation of the vehicle—is powered by the latest version of the EA888 four-cylinder engine, the 2.0L TSI EA888 Gen3 B-Cycle (Budack-cycle, earlier post), coupled with an 8-speed automatic. This is the only engine/transmission combination available in the Tiguan in the US. 4Motion with Active Control all-wheel drive system is optional. The core element of the new engine is a new combustion process combining short intake events with a high compression ratio.

http://www.greencarcongress.com/2017/06/20170627-tiguan.html

Figure 108

As depicted below, the integrated exhaust manifold is part of the exhaust conduit.

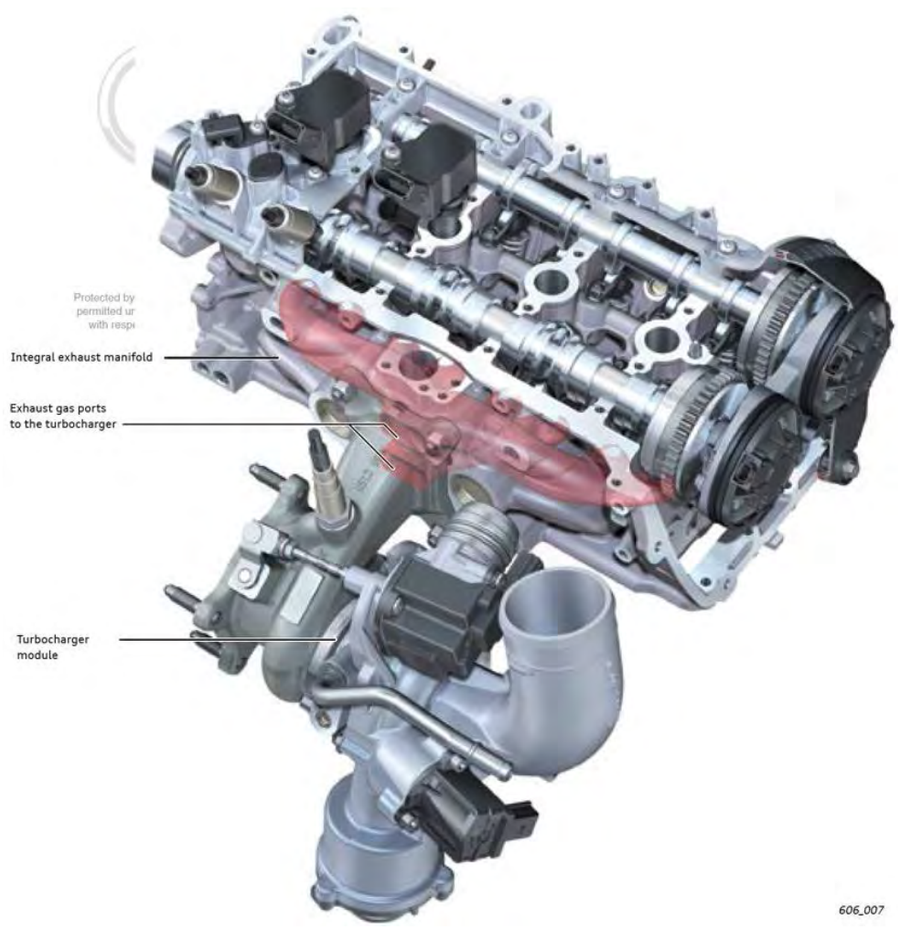

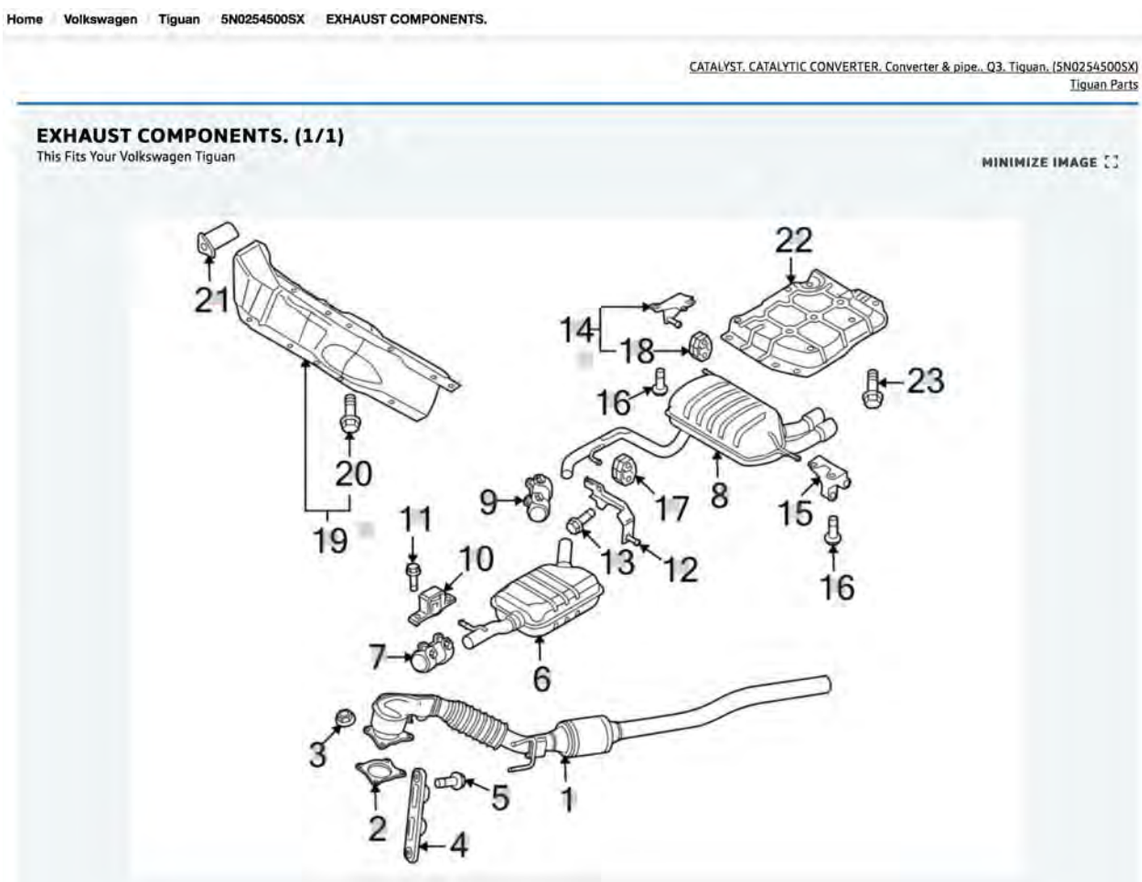

https://parts.vw.com/a/Volkswagen__Tiguan/48838109__5962725/EXHAUST-COMPONENTS/9245245.html

Figure 109

As shown below, the oxygen sensor is an exhaust gas sensor in the exhaust conduit for measuring the composition of the exhaust gas.

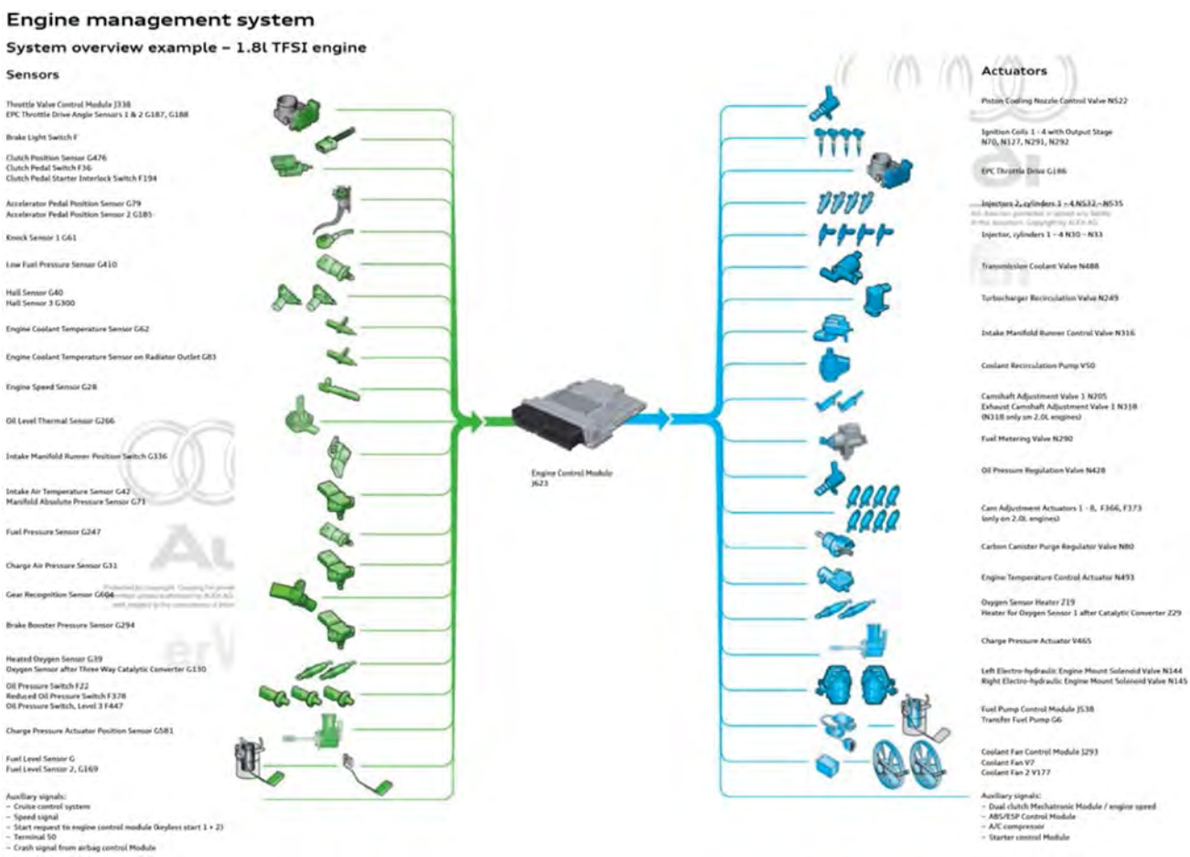

Figure 110

As shown below, the Multiport Fuel Injection System (MFI) is a fuel injection system.

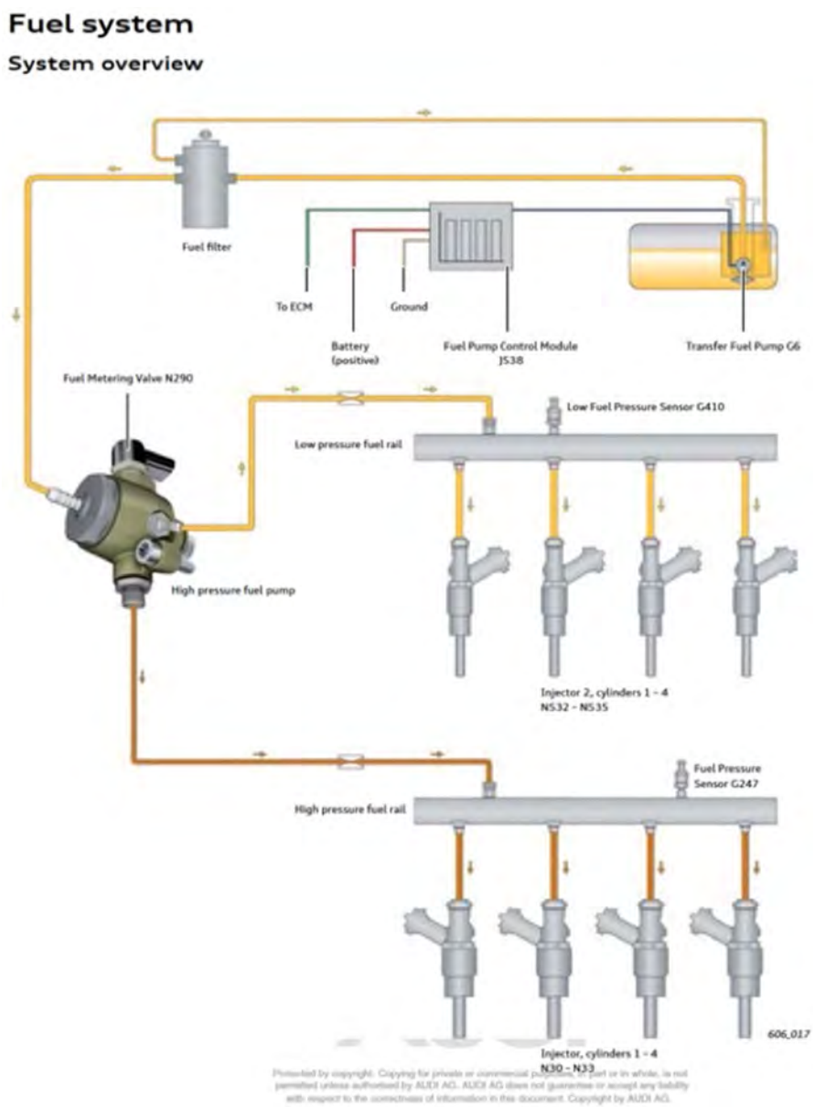

Figure 111

As shown below, the Engine Control Module (ECM) is an engine management system for controlling the operation of the engine including the fuel injection system and the air/fuel ratio for at least one cylinder. The PCM monitors and determines the air/fuel mixture. The sensors provide engine operation data to the engine management system. The engine operation data related to expected engine operation (whether or not proper combustion of the engine is achieved or not) with engine fueling on the correct stroke (i.e. combustion) and/or engine fueling (fuel injection time) on an incorrect stoke (monitored proper combustion) by the Engine Control Module (ECM).

Upon information and belief, information related to the terms “fueling on the correct stroke” or “fueling on an incorrect stroke” is not publicly available, and only in the possession of Volkswagen. However, in my opinion this element is highly likely present in the ’122 patent

Accused Instrumentalities. This information is highly likely to be contained in the software from the ECM.

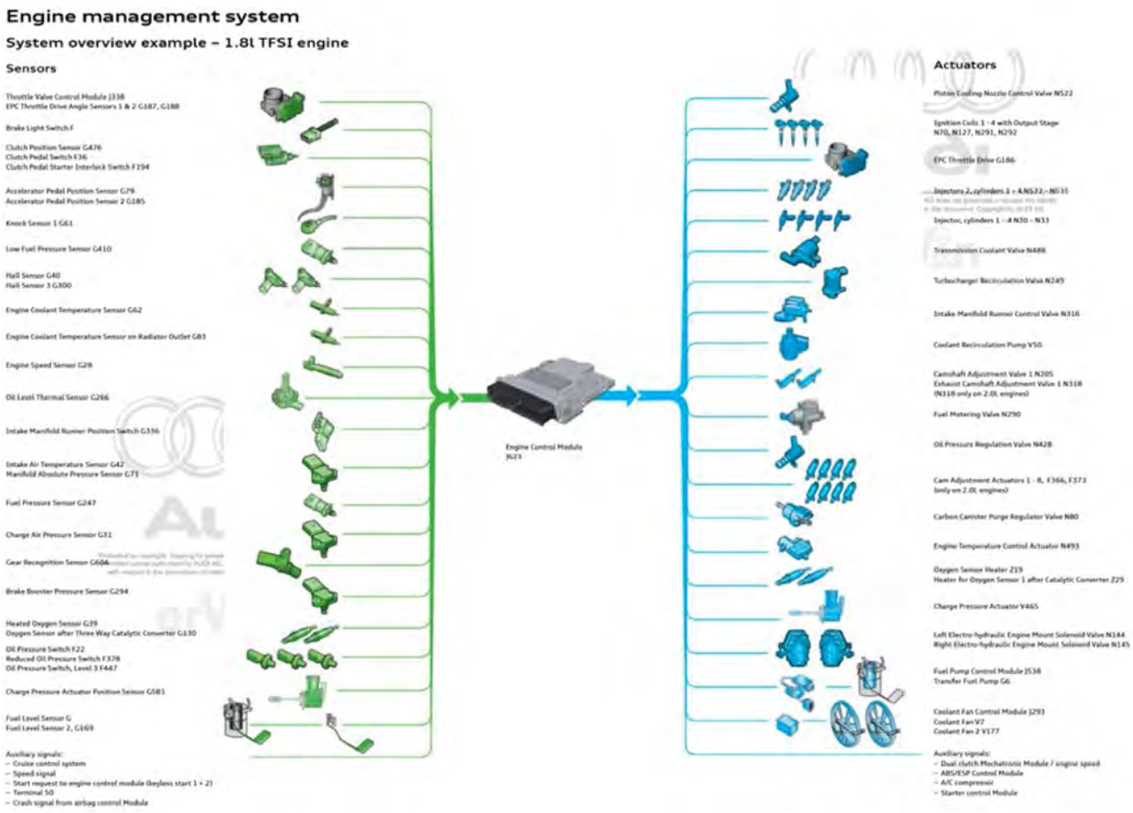

Figure 112

The ’122 patent Accused Instrumentalities comprise an engine management system is arranged to receive from said sensor(s) respective signal(s).

For example, as shown below, the ECM receives signals from the sensors.

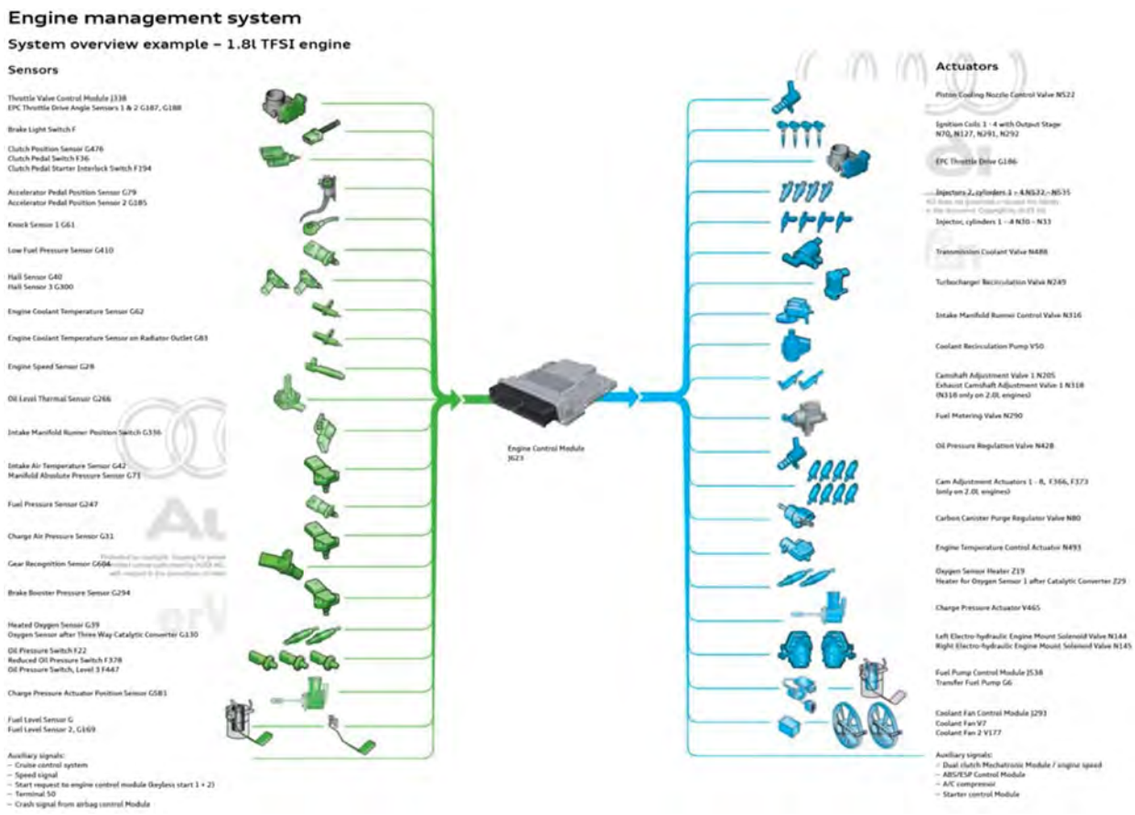

Figure 113

For example, as shown below, the engine management system oscillates the air/fuel ratio (the PCM increases or decrease fuel injection duration) depending on the air/fuel ratio (measured by the oxygen sensor in the exhaust stream) as measured by the exhaust gas oxygen sensors (8 & 9).

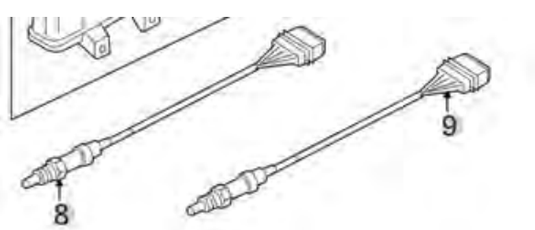

Figure 114

As exemplified below, the PCM reverses the direction of change of the air/fuel ration (from rich to lean, or lean to rich) when the exhaust gas composition sensed (measured by the oxygen sensor in the exhaust stream) as being indicative of rich engine operation or lean engine operation (detects a wide range of air fuel ratios; closed-loop fuel control operation changes direction between rich and lean). When this occurs at too slow of a rate from rich to lean, the PCM sets DTC P0139. The temporal characteristics (the measured amplitude versus the

amplitude of a slow sensor) of the oscillation in the air/fuel ratio (oscillates between rich and lean). The PCM monitors the switch rate frequency of the exhaust gas oxygen sensors between rich and lean and vice versa and is capable of determining when the frequency is not correct.

2015 Volkswagen Tiguan 4Motion (5N2) L4-2.0L Turbo (CCTA)

Vehicle » A L L Diagnostic Trouble Codes (DTC) » Testing and Inspection » P Code Charts » P0139 » Engine Control Module, 2015 MY

ENGINE CONTROL MODULE, 2015 MY

Engine Control Module, 2015 MY

DTC / Description	Monitor Strategy Description	Malfunction Criteria and Threshold Value	Secondary Parameters with Enable Conditions	Monitoring Time Length	MIL Illumination	Component Diagnostic Procedure
			For time > 10.0 Sec General : Engine running Dew point exceeded Lambda set value > 0.995			
P0139 O2 Sensor Circuit Slow Response Bank 1 Sensor 2	O2 Sensor Circuit Slow Response Bank 1 Sensor 2	EWMA filtered transient time at fuel cutoff > 0.0 s In voltage range of 201 - 401 mV Number of checks, >= 3	Rich voltage enable > = 547.9 mV Lean voltage < = 201.2 mV Fuel cutoff active O2S rear ready Modeled exhaust gas temp > 400 °C Front HO2S sensor lambda signal > 2.00 V	100.0 s	1 DCY	Check the Oxygen Sensor 1 After Catalytic Converter (GX7) . Refer to ⇒ 1 Oxygen Sensor 1 After Catalytic Converter (GX7), Checking I.

Upon information and belief, a determination whether or not the engine is being fueled on the correct stroke is determined by the ECM and the MFI wherein temporal characteristics (shown above) are compared with relevant engine operation data (shown above).

Based upon the totality of the foregoing evidence, and based further upon information and belief, the ’122 patent Accused Instrumentalities include “an internal combustion engine, comprising a number of cylinders, the or each cylinder containing a four-stroke reciprocating piston, an exhaust conduit, one or more engine operating condition sensors including an exhaust gas sensor in the exhaust conduit for measuring the composition of the exhaust gas, a fuel injection system, and an engine management system for controlling the operation of the engine including the fuel injection system and the air/fuel ratio for at least one cylinder, wherein the engine management system contains engine operation data, the engine operation data being related to expected engine operation with engine fueling on the correct stroke and/or engine fueling on an incorrect stroke, and the engine management system is arranged to: a) receive from said sensor(s) respective signal(s); b) oscillate the air/fuel ratio between a relatively rich level and a relatively lean level, the exhaust gas composition varying depending on the air/fuel ratio; c) reverse the direction of change of the air/fuel ratio when the exhaust gas composition is sensed as being indicative of rich engine operation or lean engine operation; d) determine the temporal characteristics of the oscillation in the air/fuel ratio; and e) determine whether or not the engine is being fueled on the

correct stroke by comparing said temporal characteristics with said relevant engine operation data."

Figure 115

COUNT XVI – INFRINGEMENT OF U.S. PATENT NO. 6,757,149

115. The allegations set forth in the foregoing paragraphs 1 through 114 are incorporated into this Sixteenth Claim for Relief.

116. On Jun. 29, 2004, U.S. Patent No. 6,757,149 ("the '149 patent"), entitled "Method for Controlling Fuel Injector Valve Solenoid Current," was duly and legally issued by the United States Patent and Trademark Office. A true and correct copy of the '149 patent is attached as Exhibit 16.

117. Michigan Motor is the assignee and owner of the right, title and interests in and to the '149 patent, including the right to assert all causes of action arising under said patents and the right to any remedies for infringement of them.

118. Upon information and belief, Defendants have directly infringed at least claim 1 of the '149 patent by making, using, selling, importing and/or providing and causing to be used at least the 2013-2017 Volkswagen Jetta Hybrid and 2016-2018 Audi A3 e-tron Sportback (the "'149 patent Accused Instrumentalities").

119. In particular, claim 1 of the '149 patent recites a method of controlling a fuel injector valve solenoid comprising: generating a set-point signal to model a desired current profile flowing through the valve solenoid; providing a current controller adapted to regulate the current flowing through the valve solenoid; and regulating the current flowing through the valve solenoid such that the current flowing through the valve solenoid closely matches the set point signal.

120. On information and belief, the ’149 patent Accused Instrumentalities infringe claim 1 of the ’149 patent. The ’149 patent Accused Instrumentalities practice a method of controlling a fuel injector valve solenoid (*Figure 116*) comprising: generating a set-point signal to model a desired current profile flowing through the valve solenoid (*Figure 117*); providing a current controller adapted to regulate the current flowing through the valve solenoid (*Figure 117*); and regulating the current flowing through the valve solenoid such that the current flowing through the valve solenoid closely matches the set point signal (*Figure 117*).

For example, as shown below, the Engine Control Module (ECM) are microcontrollers which practice a method of controlling a fuel injector valve solenoid.

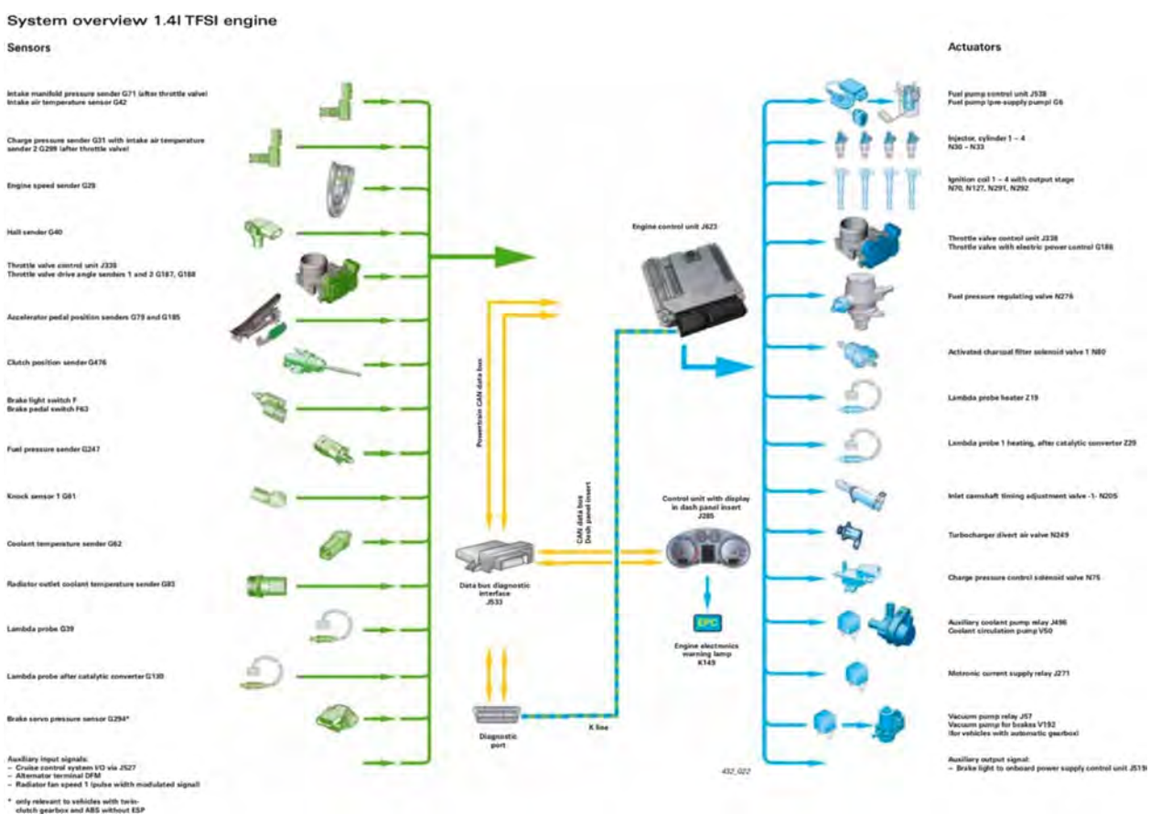

Audi 1.4L TFSI SSP 432

Figure 116

For example, as shown below, a set point signal is generated by the ECM to model a desired current profile flowing through the valve solenoid with a peak of up to 12 amperes and a holding current of 2.6 amperes.

The solenoid injectors are opened by the engine control unit with a voltage of 65V. Electrical current peaks of up to 12 amperes can occur. The holding current is approx. 2.6 amperes.
The injectors are attached to the base of the intake manifold, in which the fuel distributor is also integrated.

Audi 1.4L TFSI SSP 432

Upon information and belief a current controller associated with the ECM and the valve solenoid regulates the current flowing through the valve solenoid such that the current flowing through the valve solenoid closely matches the set point signal.

Figure 117

COUNT XVII – INFRINGEMENT OF U.S. PATENT NO. 7,116,081

121. The allegations set forth in the foregoing paragraphs 1 through 120 are incorporated into this Seventeenth Claim for Relief.

122. On Oct. 3, 2006, U.S. Patent No. 7,116,081 ("the '081 patent"), entitled "Thermal Protection Scheme for High Output Vehicle Alternator," was duly and legally issued by the United States Patent and Trademark Office. A true and correct copy of the '081 patent is attached as Exhibit 17.

123. Michigan Motor is the assignee and owner of the right, title and interests in and to the '081 patent, including the right to assert all causes of action arising under said patents and the right to any remedies for infringement of them.

124. Upon information and belief, Defendants have directly infringed at least claim 1 of the ’081 patent by making, using, selling, importing and/or providing and causing to be used the 2013-2017 Volkswagen Jetta Hybrid and 2016-2018 Audi A3 e-tron Sportback (the “’081 patent Accused Instrumentalities”).

125. In particular, claim 1 of the ’081 patent recites a thermal protection system for a high output vehicle alternator, said system comprising: a duty cycle control system; an alternator having a temperature limit and at least one rotor speed limit, said alternator operably connected to said duty cycle control system; a field current supply to said alternator; an alternator rotor speed sensor in communication with said duty cycle control system for determining an alternator rotor speed; and an alternator temperature sensor in communication with said duty cycle control system, for determining an alternator temperature, wherein said duty cycle control system regulates said field current supply to said alternator based on said alternator rotor speed and said alternator temperature in order to maintain said alternator temperature below said temperature limit and prevent excess heat from being generated.

126. On information and belief, the ’081 patent Accused Instrumentalities infringe claim 1 of the ’081 patent. The ’081 patent Accused Instrumentalities comprise a thermal protection system for a high output vehicle alternator (*Figure 118-119*), said system comprising: a duty cycle control system (*Figure 120*); an alternator having a temperature limit and at least one rotor speed limit, said alternator operably connected to said duty cycle control system (*Figure 121*); a field current supply to said alternator (*Figure 122*); an alternator rotor speed sensor in communication with said duty cycle control system for determining an alternator rotor speed (*Figure 123*); and an alternator temperature sensor in communication with said duty cycle control system, for determining an alternator temperature, wherein said duty cycle control system regulates said field current supply to said alternator based on said alternator rotor speed and said

alternator temperature in order to maintain said alternator temperature below said temperature limit and prevent excess heat from being generated (*Figure 123*).

The drive motor serves as a high output alternator during regeneration in generator mode.

There exists a Drive Motor Temperature Sensor G712 and Drive Motor Rotor Position Sensor G713 and DTCs P0A2B, P0A2C and P0A2D that show a monitoring of an alternator thermal protection system.

Overview

Power transmission is provided by the front wheel drive, six-speed 0DD S tronic (DSG) transmission.

The integrated Electro-drive Drive Motor V141 (e-machine) is a permanently excited synchronous machine that develops up to 102 hp (75 kW) of power. It is capable of delivering approximately 243 lb ft (330 Nm) of torque to the transmission. V141 provides electric-only drive-away from standstill and electric-only driving as well as starting the internal combustion engine via clutch K0. (see page 10).

If necessary, in Boost mode, the (e-machine) and internal combustion engine are connected via clutch K0 and deliver the maximum system power to the transmission.

In generator mode, V141 is driven by the internal combustion engine using the vehicle's propulsion energy (recuperation) or through the closed K0 clutch. The electric drive motor supplies power to the entire vehicle.

Clutches K1 and K2 (see page 16, page 17) transfer the entire power generated by both drives to sub-gearboxes 1 and 2.

All 3 of clutches K0, K1 and K2 are wet-type clutches and are controlled by the DSG Transmission Mechatronic Module J743.

The transmission has only one ATF supply. Approximately 7.3 qt (7 l) of ATF supply both the transmission hydraulics and the sub-gearbox. Both sub-transmissions form the manual transmission of the transmission.

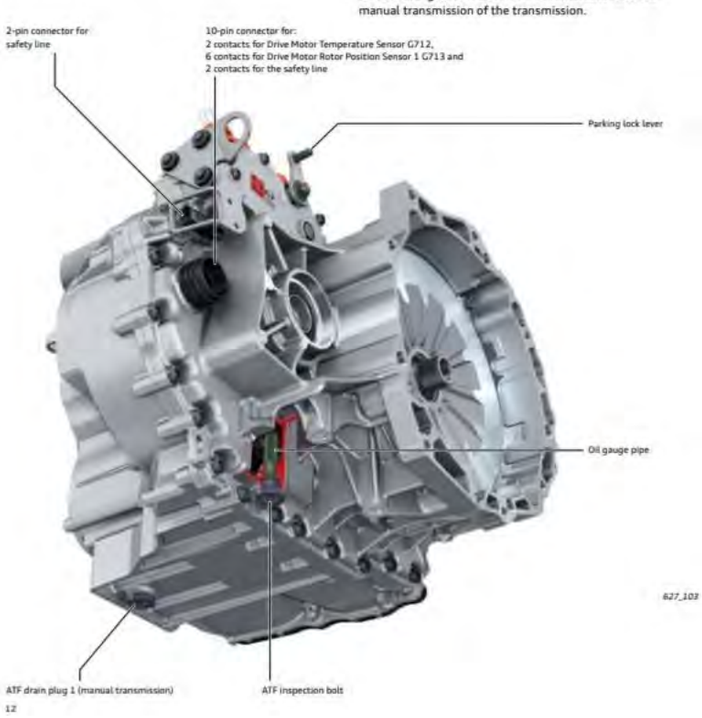

12

Figure 118

P0A2B	Drive Motor "A" Temperature Sensor Circuit Range/ Performance	• Stator temperature - average rating from IGBT-phase temperatures > 23 – 50 K • Stator temperature jump to high > 12 K	• Engine off time > 6.0 hr • System state drive	• Debounce time = 2,500.0 ms	• 2 DCY • Once / DCY
P0A2C	Drive Motor "A" Temperature Sensor Circuit Low	• Stator temperature too high > + 196° C		• Debounce time = 800.0 ms	• 2 DCY • Continuous
P0A2D	Drive Motor "A" Temperature Sensor Circuit High	• Stator temperature too low < -50° C		• Debounce time = 800.0 ms	• 2 DCY • Continuous
P0A3F	Drive Motor "A" Position Sensor Circuit	• Internal fault detected true none		• Continuous	• 0 DCY • Continuous
		• Difference between current and previous calculated Position sensor angle is greater than > 48.4°		• Continuous	
		• Difference between Position sensor frequency and from angle calculated frequency is greater than > 200 Hz		• Debounce time = 50.0 ms	

Figure 119

The DTC P0A3F implies a duty cycle control system in its reference to frequency. The captured code from a live vehicle shows duty cycle control for battery charging.

P0A2B	Drive Motor "A" Temperature Sensor Circuit Range/ Performance	• Stator temperature - average rating from IGBT-phase temperatures > 23 – 50 K • Stator temperature jump to high > 12 K	• Engine off time > 6.0 hr • System state drive	• Debounce time = 2,500.0 ms	• 2 DCY • Once / DCY
P0A2C	Drive Motor "A" Temperature Sensor Circuit Low	• Stator temperature too high > + 196° C		• Debounce time = 800.0 ms	• 2 DCY • Continuous
P0A2D	Drive Motor "A" Temperature Sensor Circuit High	• Stator temperature too low < -50° C		• Debounce time = 800.0 ms	• 2 DCY • Continuous
P0A3F	Drive Motor "A" Position Sensor Circuit	• Internal fault detected true none		• Continuous	• 0 DCY • Continuous
		• Difference between current and previous calculated Position sensor angle is greater than > 48.4°		• Continuous	
		• Difference between Position sensor frequency and from angle calculated frequency is greater than > 200 Hz		• Debounce time = 50.0 ms	

C6 Batt. Chrg.

Block

Code:

```
;SW:5QE-915-682-AF   HW:5QE-915-682-AF ---  Batt. Chrg.
;Component:OBC KOSTAL    H31 4013, Coding:115068223000
;EV_OBCSinglPhaseKLOMQB12P,001001,EV_OBCSinglPhaseKLOMQB12P.rod
;Thursday,02,August,2018,08:21:18:50490
;VCDS Version: Release 18.2.1 (x64)  Data version: 20180518 DS287.1
;VCID: 116A6A14C0AC40CCB8-8044

Group,Description,Actual
IDE00019,Voltage terminal 30,13.0, V
IDE00030,Status of actuator test,not active,
IDE00322,Status of basic setting,was not yet started,
IDE00323,Security Access: Number of invalid keys,0,
IDE00637,Intermediate circuit voltage,403.4, V
IDE00767,No. of unscheduled ECU resets,00,
IDE02486,Data logger triggering,not active,
IDE06805,Status of voltage freedom,High voltage power off not recognized,
IDE06954,HV charge current: act. value,9, A
IDE06955-ENG114223,HV charge current: spec. value-Charger_HV_current_commanded_value,8.8, A
IDE07975,Remote control for charge function of H-V battery,not activated,
IDE08421-IDE05431,Power outlet A for battery charging-Locking for H-V charge plug,locked,
IDE08421-MAS07220,Power outlet A for battery charging-Status connect. recognition,present,
IDE08421-MAS07221,Power outlet A for battery charging-Connector locking requirement,00000000 ,
IDE08421-MAS07222,Power outlet A for battery charging-Connector unlocking requirement,00000000 ,
IDE08421-MAS07223,Power outlet A for battery charging-Max. current of charge connector,20, A
IDE08421-MAS07565,Power outlet A for battery charging-Activation charge cover lock charge socket A,not requested,
IDE08421-MAS07567,Power outlet A for battery charging-Status charge cover lock charge socket A,not locked,
IDE08421-MAS10983,Power outlet A for battery charging-Activation charge cover unlock charge socket A,not requested,
IDE08421-MAS12565,Power outlet A for battery charging-Charge socket temperature sensor AC,27.0, °C
IDE08421-MAS12566,Power outlet A for battery charging-Charge sensor temperature sensor DC,0.0, °C
IDE08422-IDE05431,Power outlet B for battery charging-Locking for H-V charge plug,not locked,
IDE08422-MAS07220,Power outlet B for battery charging-Status connect. recognition,Not Present,
```

C6 Batt. Chrg.

Block

Code:

```
IDE08422-MAS07220,Power outlet B for battery charging-Status connect. recognition,Not Present,
IDE08422-MAS07221,Power outlet B for battery charging-Connector locking requirement,00000000 ,
IDE08422-MAS07222,Power outlet B for battery charging-Connector unlocking requirement,00000000 ,
IDE08422-MAS07223,Power outlet B for battery charging-Max. current of charge connector,0, A
IDE08422-MAS07224,Power outlet B for battery charging-Temp. of charge socket,27.0, °C
IDE08422-MAS07566,Power outlet B for battery charging-Activation charge cover lock charge socket B,not requested,
IDE08422-MAS07568,Power outlet B for battery charging-Status: chg. cover lock. device: chg. socket B,not locked,
IDE08423-MAS02949,Control signal for power outlet A for battery charging-Frequency,1000, Hz
IDE08423-MAS02952,Control signal for power outlet A for battery charging-Control voltage,5759, mV
IDE08423-MAS03873,Control signal for power outlet A for battery charging-Duty cycle,33.5, %
IDE08423-MAS04136,Control signal for power outlet A for battery charging-Current,20.2, A
IDE08423-MAS07262,Control signal for power outlet A for battery charging-Signal recognized,00000001 ,
IDE08424-MAS02949,Control signal for power outlet B for battery charging-Frequency,0, Hz
IDE08424-MAS02952,Control signal for power outlet B for battery charging-Control voltage,0, mV
IDE08424-MAS03873,Control signal for power outlet B for battery charging-Duty cycle,0.0, %
IDE08424-MAS04136,Control signal for power outlet B for battery charging-Current,0.0, A
IDE08424-MAS07262,Control signal for power outlet B for battery charging-Signal recognized,00000000 ,
IDE08425-MAS07225,Indicator lamps for power outlet A for battery charging-Status: indicator light 1,OFF,
IDE08425-MAS07226,Indicator lamps for power outlet A for battery charging-Status: indicator light 2,Blinking,
IDE08425-MAS07227,Indicator lamps for power outlet A for battery charging-Status: indicator light 3,OFF,
IDE08425-MAS07228,Indicator lamps for power outlet A for battery charging-Intensity: indicator light 1,100, %
IDE08425-MAS07229,Indicator lamps for power outlet A for battery charging-Intensity: indicator light 2,100, %
IDE08425-MAS07230,Indicator lamps for power outlet A for battery charging-Intensity: indicator light 3,100, %
IDE08425-MAS07231,Indicator lamps for power outlet A for battery charging-Period duration: indicator light 1,2000, ms
IDE08425-MAS07232,Indicator lamps for power outlet A for battery charging-Period duration: indicator light 2,2000, ms
IDE08425-MAS07233,Indicator lamps for power outlet A for battery charging-Period duration: indicator light 3,2000, ms
IDE08425-MAS07582,Indicator lamps for power outlet A for battery charging-Intensity: activation 4,0, %
IDE08425-MAS07590,Indicator lamps for power outlet A for battery charging-Period duration: activation 4,0, ms
IDE08425-MAS13012,Indicator lamps for power outlet A for battery charging-Status: indicator light 4,OFF,
IDE08426-MAS07225,Indicator lamps for power outlet B for battery charging-Status: indicator light 1,OFF,
IDE08426-MAS07226,Indicator lamps for power outlet B for battery charging-Status: indicator light 2,OFF,
IDE08426-MAS07227,Indicator lamps for power outlet B for battery charging-Status: indicator light 3,OFF,
```

C6 Batt. Chrg.

Block

Code:

```
IDE08426-MAS07227,Indicator lamps for power outlet B for battery charging-Status: indicator light 3,OFF,
IDE08426-MAS07228,Indicator lamps for power outlet B for battery charging-Intensity: indicator light 1,100, %
IDE08426-MAS07229,Indicator lamps for power outlet B for battery charging-Intensity: indicator light 2,100, %
IDE08426-MAS07230,Indicator lamps for power outlet B for battery charging-Intensity: indicator light 3,100, %
IDE08426-MAS07231,Indicator lamps for power outlet B for battery charging-Period duration: indicator light 1,2000, ms
IDE08426-MAS07232,Indicator lamps for power outlet B for battery charging-Period duration: indicator light 2,2000, ms
IDE08426-MAS07233,Indicator lamps for power outlet B for battery charging-Period duration: indicator light 3,2000, ms
IDE08426-MAS07582,Indicator lamps for power outlet B for battery charging-Intensity: activation 4,0, %
IDE08426-MAS07590,Indicator lamps for power outlet B for battery charging-Period duration: activation 4,0, ms
IDE08426-MAS13012,Indicator lamps for power outlet B for battery charging-Status: indicator light 4,OFF,
IDE08427-MAS07237,Statistics of power outlet A for battery charging-No. of connections,1485,
IDE08427-MAS07238,Statistics of power outlet A for battery charging-No. of lockings,1824,
IDE08428-MAS07237,Statistics of power outlet B for battery charging-No. of connections,0,
IDE08428-MAS07238,Statistics of power outlet B for battery charging-No. of lockings,0,
IDE08430,Cause of cancellation of charge procedure,not active,
IDE08431,Remaining time for charge procedure,40, min
IDE08432-MAS02158,Button for battery charging-Actuation condition,not activated,
IDE08432-MAS04737,Button for battery charging-Indicator lamp,On,
IDE08505-MAS07220,Power outlet for quick charging of HV battery-Status connect. recognition,present,
IDE08638-MAS04721,SOC limits: set by customer-Minimum charge level,1, %
IDE08638-MAS04722,SOC limits: set by customer-Maximum charge level,0, %
IDE08639,max. loading power,3300, W
IDE08640,Spec. mode: load mgmnt.,AC main charge,
IDE08649-IDE06971,Ready to charge-Operational readiness in H-V system,active,
IDE08649-MAS07214,Ready to charge-Status charge readiness: engine,ready for operation,
IDE08649-MAS07215,Ready to charge-Status charge readiness charge mngmt.,ready for operation,
IDE08657-MAS01424,Current at DC charg. stat.-max.value,0, A
IDE08657-MAS07236,Current at DC charg. stat.-Act.val.,0, A
IDE08658-MAS01424,Voltage at DC charg. stat.-max.value,0, V
IDE08658-MAS07236,Voltage at DC charg. stat.-Act.val.,0, V
IDE08659-MAS07237,Statistic of DC charger for battery charging-No. of connections,0,
IDE08659-MAS07238,Statistic of DC charger for battery charging-No. of lockings,0,
```

C6 Batt. Chrg.

Block

Code:

```
IDE08659-MAS07238,Statistic of DC charger for battery charging-No. of lockings,0,
IDE08659-MAS07239,Statistic of DC charger for battery charging-No. of charging process.,0,
IDE08677-MAS07258,Load mode-Stat.: charge mode,AC main charge,
IDE08677-MAS07259,Load mode-Chg. type,Imm. charg.,
IDE08717,Status mains voltage,present,
IDE08718-MAS06699,Chademo version-Vehicle,0,
IDE08718-MAS07395,Chademo version-Chg. statn.,0,
IDE08719-IDE08720,Values from battery mgmt system-Current condition of battery mgmt. system,External Charging,
IDE08719-MAS01420,Values from battery mgmt system-Limit for charge current,N/A---,
IDE08719-MAS04059,Values from battery mgmt system-Battery temperature,30.0, °C
IDE08719-MAS07289,Values from battery mgmt system-A/C requirement,Med. cooling reqmnt.,
IDE08719-MAS07396,Values from battery mgmt system-Act. voltage HV battery,N/A---,
IDE08719-MAS07397,Values from battery mgmt system-Act. current HV battery,N/A---,
IDE08719-MAS07407,Values from battery mgmt system-Max. battery charging voltage,N/A---,
IDE08751-MAS02158,Load button-Actuation condition,not activated,
IDE08751-MAS04737,Load button-Indicator lamp,OFF,
IDE08751-MAS07596,Load button-Locating illum. charge button,OFF,
IDE08938,Chrgr cooling reqrmnt,Med. cooling reqmnt.,
IDE08985,AC line current: actual val,15.0, A
IDE08986,AC line voltage: actual val,226, V
IDE09039,HV charger - current output voltage,368, V
IDE09057,HV battery charge state,74.5, %
IDE11570-ENG30068,Activation periods of charging cover locking-raw value in develop by ODXauthor,00,
IDE11571-ENG30068,Voltage terminal 30 battery data module-raw value in develop by ODXauthor,A3,
MAS00464-MAS00106,Standard - ambient data 1-Year,2000,
MAS00464-MAS00107,Standard - ambient data 1-Month,1,
MAS00464-MAS00108,Standard - ambient data 1-Day,2,
MAS00464-MAS00109,Standard - ambient data 1-Hours,0,
MAS00464-MAS00110,Standard - ambient data 1-Minutes,2,
MAS00464-MAS00111,Standard - ambient data 1-Seconds,40,
MAS00464-MAS00468,Standard - ambient data 1-Unlearning counter,147,
MAS00464-MAS00711,Standard - ambient data 1-Odometer reading,30904, km
```

C6 Batt. Chrg.

Block

Code:

```
MAS00464-MAS00711,Standard - ambient data 1-Odometer reading,30904, km
MAS06335-ENG30068,Voltage low voltage side DCDC - converter-raw value in develop by ODXauthor,B4,
MAS07392-MAS07393,Control signal DC charge-Control signal 1,00000000 ,
MAS07392-MAS07394,Control signal DC charge-Control signal 2,00000001 ,
MAS07396-ENG30068,Act. voltage HV battery-raw value in develop by ODXauthor,05 D5,
MAS07407-ENG30068,Max. battery charging voltage-raw value in develop by ODXauthor,01 90,
MAS07558,Spec. op. condition charge unit,AC main charge,
MAS07559,Act.. op. condition charge unit,AC main charge,
MAS07563,Function limitation charging due to temp. charge socket,not active,
MAS07564,Function limitation charging due to temp. charge unit,not active,
MAS12397-ENG30068,Number of lockings: charge cover A-raw value in develop by ODXauthor,14 70,
ENG125865,AC_maximum_input_current_value,16.0, A
ENG125867,AC_network_frequency,50.0, Hz
ENG125873,charger_coolant_temperature,40, °C
ENG123145-ENG123175,Charging_Connector_Locking_Parameter-delocking_request_time_CAN,0, ms
ENG123145-ENG123173,Charging_Connector_Locking_Parameter-delocking_time_lag,0, ms
ENG123145-ENG123174,Charging_Connector_Locking_Parameter-locking_delay_time,0, ms
ENG123145-ENG123176,Charging_Connector_Locking_Parameter-locking_time_lag,0, ms
ENG123142,charging_process_request,AC_Charging_Request,
ENG123144,charging_status,Charging,
ENG125862,current_voltage_protection,not active,
ENG123148,ekk_air_condition_current,0.0, A
ENG125863,error_status_battery_charger,not active,
ENG126556,gate_driver_voltage_DCDC,15.9, V
ENG126555,gate_driver_voltage_PFC,15.9, V
ENG126544,high_voltage_activation_request,requested,
ENG123143,max_HV_DC_voltage_obc,394, V
ENG123146,permission_to_charge_im,00000000 ,
ENG125870,power_efficiency,95.0, %
ENG125869,power_loss_battery_charger,140, W
ENG123147,ptc_heater_current,0.0, A
ENG07647,temperature_battery_charger_PFC_coil,50, °C
```

```
ENG07647,temperature_battery_charger_PFC_coil,50, °C
ENG125871,temperature_battery_charger_system_board,61, °C
ENG125872,temperature_DCDC_coil,45, °C
ENG125876,temperature_DCDC_powerline,51, °C
ENG125864,warning_status_battery_charger,no warning,

Elapsed Time: 00:07
```

https://forums.ross-tech.com/showthread.php?15151-2017-Audi-A3-1-4-TFSI-E-TRON-CUKB-(Germany)/page3

Upon information and belief, the element "duty cycle control system" is present in the '081 patent Accused Instrumentalities. As shown above, duty cycle control is used in charging the battery and is referenced in the DTC. This information is contained in the C6 Battery Charging Module software and hardware architecture.

Figure 120

As shown below, the ’081 patent Accused Instrumentalities comprise a method for an alternator (Electro-drive Drive Motor V141 in generator mode) having a temperature limit (Drive Motor Temperature Sensor G712) and at least one rotor speed limit (Drive Motor Rotor Position Sensor G713) connected to a duty cycle control system (Electro Drive Control Module J841) that uses pulse width modulated signals. Temperature limits are detailed in the Diagnostic Trouble Codes (DTCs P02AC & P02AD) also shown below.

Drive Motor Inverter A37

The drive motor inverter A37 is both a DC/AC converter and an AC/DC converter.

Electro-drive Drive Motor V141 (e-machine) as motor

In electric driving mode A37 converts the AC voltage of the Hybrid Battery Unit AX1 to a 3-phase AC voltage. The voltage is converted by pulse width modulation. There are six transistors in A37. Two for each of the three phases, U, V, and W. Each phase has a separate transistor for positive and negative.

When activated, the corresponding potential is connected. The transistors are activated by Electric Drive Control Module J841 using pulse width modulated signals. RPM is regulated by changing the frequency, and the torque of V141 by changing the activation times of the individual pulse widths.

Electro-drive Drive Motor V141 in generator mode

If V141 is running in generator mode A37 converts the generated 3-phase AC voltage to a 352 V DC voltage. The high voltage system is supplied with the generated DC voltage and the 12-volt electrical system is supplied through Voltage Converter A19.

33

Overview

Power transmission is provided by the front wheel drive, six-speed 0DD S tronic (DSG) transmission.

The integrated Electro-drive Drive Motor V141 (e-machine) is a permanently excited synchronous machine that develops up to 102 hp (75 kW) of power. It is capable of delivering approximately 243 lb ft (330 Nm) of torque to the transmission. V141 provides electric-only drive-away from standstill and electric-only driving as well as starting the internal combustion engine via clutch K0. (see page 10).

If necessary, in Boost mode, the (e-machine) and internal combustion engine are connected via clutch K0 and deliver the maximum system power to the transmission.

In generator mode, V141 is driven by the internal combustion engine using the vehicle's propulsion energy (recuperation) or through the closed K0 clutch. The electric drive motor supplies power to the entire vehicle.

Clutches K1 and K2 (see page 16, page 17) transfer the entire power generated by both drives to sub-gearboxes 1 and 2.

All 3 of clutches K0, K1 and K2 are wet-type clutches and are controlled by the DSG Transmission Mechatronic Module J743.

The transmission has only one ATF supply. Approximately 7.3 qt (7 l) of ATF supply both the transmission hydraulics and the sub-gearbox. Both sub-transmissions form the manual transmission of the transmission.

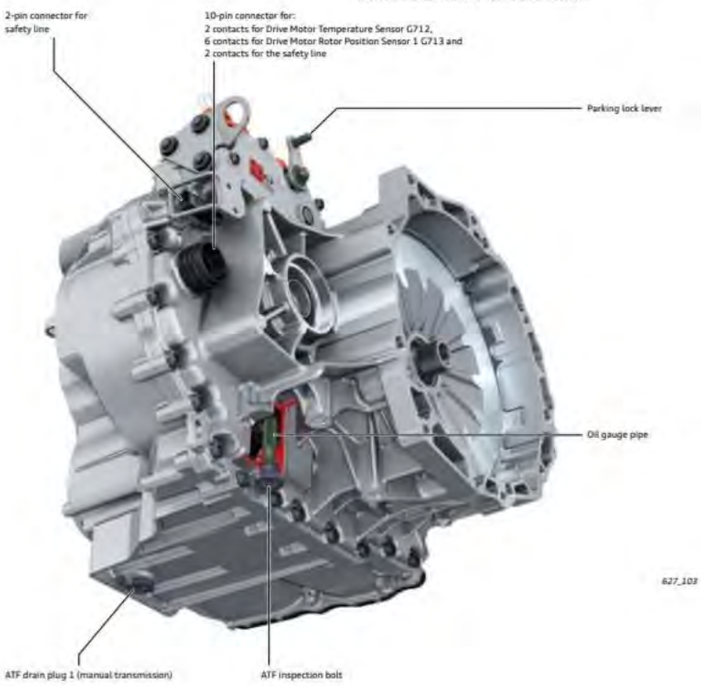

P0A2B	Drive Motor "A" Temperature Sensor Circuit Range/ Performance	• Stator temperature - average rating from IGBT-phase temperatures > 23 – 50 K • Stator temperature jump to high > 12 K	• Engine off time > 6.0 hr • System state drive	• Debounce time = 2,500.0 ms	• 2 DCY • Once / DCY
P0A2C	Drive Motor "A" Temperature Sensor Circuit Low	• Stator temperature too high > + 196° C		• Debounce time = 800.0 ms	• 2 DCY • Continuous
P0A2D	Drive Motor "A" Temperature Sensor Circuit High	• Stator temperature too low < -50° C		• Debounce time = 800.0 ms	• 2 DCY • Continuous
P0A3F	Drive Motor "A" Position Sensor Circuit	• Internal fault detected true none		• Continuous	• 0 DCY • Continuous
		• Difference between current and previous calculated Position sensor angle is greater than > 48.4°		• Continuous	
		• Difference between Position sensor frequency and from angle calculated frequency is greater than > 200 Hz		• Debounce time = 50.0 ms	

Figure 121

As shown below, the 3-phase power cable supplies the "field" current to the SMG (alternator).

Upon information and belief, the Electro Drive Motor V141 in generator mode (alternator) Drive Motor Rotor Position Sensor G713 (rotor speed sensor) is in communication with the Electric Drive Control Module J841 which supplies the field current to the Electro Drive Motor V141 when running in generator mode.

Drive Motor Inverter A37

The drive motor inverter A37 is both a DC/AC converter and an AC/DC converter.

Electro-drive Drive Motor V141 (e-machine) as motor

In electric driving mode A37 converts the AC voltage of the Hybrid Battery Unit AX1 to a 3-phase AC voltage. The voltage is converted by pulse width modulation. There are six transistors in A37. Two for each of the three phases, U, V, and W. Each phase has a separate transistor for positive and negative.

When activated, the corresponding potential is connected. The transistors are activated by Electric Drive Control Module J841 using pulse width modulated signals. RPM is regulated by changing the frequency, and the torque of V141 by changing the activation times of the individual pulse widths.

Electro-drive Drive Motor V141 in generator mode

If V141 is running in generator mode A37 converts the generated 3-phase AC voltage to a 352 V DC voltage. The high voltage system is supplied with the generated DC voltage and the 12-volt electrical system is supplied through Voltage Converter A19.

Figure 122

As shown below, the Electro Drive Motor V141 in generator mode (alternator) Drive Motor Rotor Position Sensor G713 (rotor speed sensor) is in communication with the Electric Drive Control Module J841 (duty cycle control system) for determining the Electro Drive Motor V141 (alternator rotor) speed.

Moreover, as exemplified below, the ’081 patent Accused Instrumentalities comprise a method for an alternator temperature sensor (Drive Motor Temperature Sensor G712) in communication with said duty cycle control system (Electro Drive Control Module J841), for determining an alternator temperature, wherein said duty cycle control system regulates said field current supply to said alternator (Electro-drive Drive Motor V141 in generator mode) based on said alternator temperature in order to maintain said alternator temperature below said temperature limit and prevent excess heat from being generated. The temperature limits for said alternator are detailed in the Diagnostic Trouble Codes (DTCs P02AC & P02AD) shown above.

Drive Motor Inverter A37

The drive motor inverter A37 is both a DC/AC converter and an AC/DC converter.

Electro-drive Drive Motor V141 (e-machine) as motor

In electric driving mode A37 converts the AC voltage of the Hybrid Battery Unit AX1 to a 3-phase AC voltage. The voltage is converted by pulse width modulation. There are six transistors in A37. Two for each of the three phases, U, V, and W. Each phase has a separate transistor for positive and negative.

When activated, the corresponding potential is connected. The transistors are activated by Electric Drive Control Module J841 using pulse width modulated signals. RPM is regulated by changing the frequency, and the torque of V141 by changing the activation times of the individual pulse widths.

Electro-drive Drive Motor V141 in generator mode

If V141 is running in generator mode A37 converts the generated 3-phase AC voltage to a 352 V DC voltage. The high voltage system is supplied with the generated DC voltage and the 12-volt electrical system is supplied through Voltage Converter A19.

33

Overview

Power transmission is provided by the front wheel drive, six-speed 0DD S tronic (DSG) transmission.

The integrated Electro-drive Drive Motor V141 (e-machine) is a permanently excited synchronous machine that develops up to 102 hp (75 kW) of power. It is capable of delivering approximately 243 lb ft (330 Nm) of torque to the transmission. V141 provides electric-only drive-away from standstill and electric-only driving as well as starting the internal combustion engine via clutch K0. (see page 10).

If necessary, in Boost mode, the (e-machine) and internal combustion engine are connected via clutch K0 and deliver the maximum system power to the transmission.

In generator mode, V141 is driven by the internal combustion engine using the vehicle's propulsion energy (recuperation) or through the closed K0 clutch. The electric drive motor supplies power to the entire vehicle.

Clutches K1 and K2 (see page 16, page 17) transfer the entire power generated by both drives to sub-gearboxes 1 and 2.

All 3 of clutches K0, K1 and K2 are wet-type clutches and are controlled by the DSG Transmission Mechatronic Module J743.

The transmission has only one ATF supply. Approximately 7.3 qt (7 l) of ATF supply both the transmission hydraulics and the sub-gearbox. Both sub-transmissions form the manual transmission of the transmission.

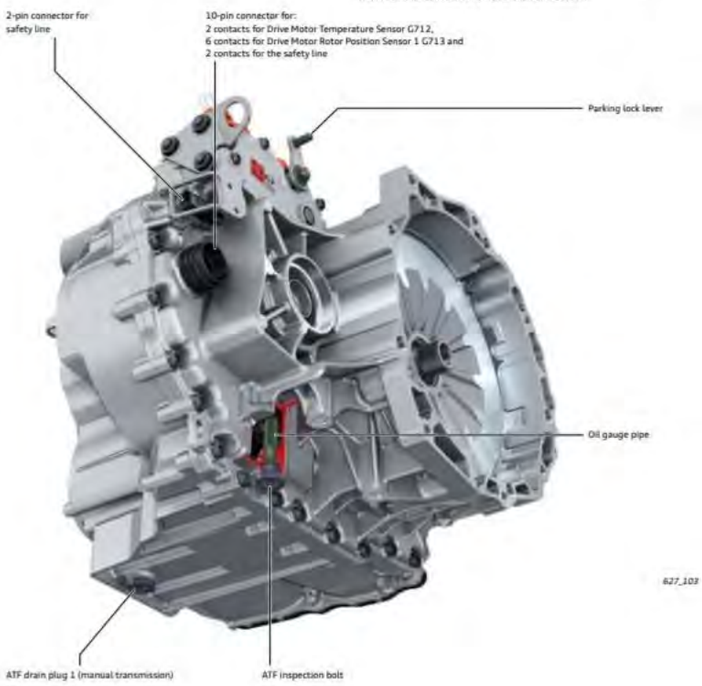

12

Figure 123

COUNT XVIII – INFRINGEMENT OF U.S. PATENT NO. 8,909,482

127. The allegations set forth in the foregoing paragraphs 1 through 126 are incorporated into this Eighteenth Claim for Relief.

128. On Dec. 9, 2014, U.S. Patent No. 8,909,482 ("the '482 patent"), entitled "Device for Measuring Power Consumption and Performance Relative to the Environment of a Power-Consuming Unit," was duly and legally issued by the United States Patent and Trademark Office. A true and correct copy of the '482 patent is attached as Exhibit 18.

129. Michigan Motor is the assignee and owner of the right, title and interests in and to the ’482 patent, including the right to assert all causes of action arising under said patents and the right to any remedies for infringement of them.

130. Upon information and belief, Defendants have directly infringed at least claim 1 of the ’482 patent by making, using, selling, importing and/or providing and causing to be used the 2013-2017 Volkswagen Jetta Hybrid and 2016-2018 Audi A3 Sportback e-tron (the “’482 patent Accused Instrumentalities”).

131. In particular, claim 1 of the ’482 patent recites a device for measuring power consumption and performance with respect to the environment of a power-consuming unit comprising a data introduction module, which receives at least one power consumption value, measured by a measurement apparatus of the power-consuming unit; an input device for inputting waste production data; a display screen; and a computer with a processor and a memory device having therein a plurality of instructions that, when executed by the processor, cause the processor to (a) receive the at least one power consumption value from the data introduction module, (b) receive the waste production data, (c) calculate an ecological parameter based on the at least one power consumption value and the waste production data, and (d) operate the display screen to display the calculated ecological parameter, wherein the calculated ecological parameter is an adjusted mean of the sum of the deviations of the at least one power consumption value with respect to a reference value corresponding to the at least one power consumption value.

132. On information and belief, the ’482 patent Accused Instrumentalities infringe claim 1 of the ’081 patent. The ’482 patent Accused Instrumentalities comprise a device for measuring power consumption and performance with respect to the environment of a power-consuming unit (*Figure 124*) comprising a data introduction module, which receives at least one

power consumption value, measured by a measurement apparatus of the power-consuming unit; an input device for inputting waste production data; a display screen; and a computer with a processor and a memory device having therein a plurality of instructions that, when executed by the processor, cause the processor to (a) receive the at least one power consumption value from the data introduction module, (*Figure 125*) (b) receive the waste production data (*Figures 125-126*), (c) calculate an ecological parameter based on the at least one power consumption value and the waste production data, and (*Figure 127*) (d) operate the display screen to display the calculated ecological parameter (*Figure 127*), wherein the calculated ecological parameter is an adjusted mean of the sum of the deviations of the at least one power consumption value with respect to a reference value corresponding to the at least one power consumption value (*Figure 127*).

As shown below, the Power Meter shows the power requested by the driver (device for measuring power consumption and performance). The indicator also shows power consumption and performance with respect to the environment (operation in Eco range) of the power consuming unit.

Also, exemplified below, the electric power meter shows the power available from the electric drive motor (device for measuring power consumption and performance). The electric power meter allows the driver to depress the accelerator pedal only so far that the output of 20 kW [motor] is not exceeded (shows power consumption and performance with respect to the environment). This allows the driver to prevent an unwanted start of the combustion engine.

Power meter

The power meter shows the power requested by the driver. If the indicator remains in the Eco range, then the vehicle is being moved efficiently and it is possible to drive electrically.

Electric power meter

The electric power meter shows the power available from the electric drive motor. The electric power meter allows the driver to depress the accelerator pedal only so far that the output of 20 kW is not exceeded. This allows the driver to prevent an unwanted start of the combustion engine.

Figure 124

As shown below, the engine control unit (ECU) J623 comprises a data introduction module, which receives at least one power consumption value (load requirements), measured by a measurement apparatus (hybrid CAN BUS and Powertrain CAN BUS) of the power-consuming unit (drivetrain) (shown above).

Upon information and belief, the operating strategy for the electric drive motor and combustion engine functions is integrated into the engine control unit (ECU) J623. The operating strategy automatically selects the optimal operating state for the drive train and thereby avoids operating ranges of the combustion engine with a low level of efficiency (The ECU is capable of identifying and inputting waste production data). Where only a low torque or power output is required, the engine is switched off.

High voltage system control

The operating strategy for the electric drive motor and combustion engine functions is integrated into the engine control unit J623. The operating strategy automatically selects the optimal operating state for the drive train and thereby avoids operating ranges of the combustion engine with a low level of efficiency. Where only a low torque or power output is required, the engine is switched off.

The engine control unit is connected to the high-voltage battery and the power electronics by the hybrid CAN bus. The state of the high-voltage components is sent to the engine control unit, which controls the electrical ready-to-drive mode. All other information which is required for electric driving or charging the high-voltage battery, such as the load requirements, air conditioning requirements, temperature, etc. are exchanged via the hybrid CAN bus and the powertrain CAN bus.

Figure 125

Upon information and belief, the operating strategy for the electric drive motor and combustion engine functions is integrated into the data introduction module of the engine control unit (ECU) J623 (the ECU practices is a computer with a processor and a memory device having therein a plurality of instructions). The operating strategy (plurality of instructions) automatically selects the optimal operating state for the drive train and thereby avoids operating ranges of the combustion engine with a low level of efficiency (power consumption value) - where only a low torque or power output is required, the engine is switched off. The ECU J623 receives input from the heated Oxygen Sensor G130 which is an indication of engine operating efficiency, or inefficiency, as in waste production, because it is located after the catalytic converter.

System overview 1.4l TFSI engine

Sensors

Intake manifold pressure sender G71 (after throttle valve)
Intake air temperature sensor G42

Charge pressure sender G31 with intake air temperature sender 2 G299 (after throttle valve)

Engine speed sender G28

Hall sender G40

Throttle valve control unit J338
Throttle valve drive angle senders 1 and 2 G187, G188

Accelerator pedal position sendes G79 and G185

Clutch position sender G476

Brake light switch F
Brake pedal switch F63

Fuel pressure sender G247

Knock sensor 1 G61

Coolant temperature sender G62

Radiator outlet coolant temperature sender G83

Lambda probe G39

Lambda probe after catalytic converter G130

Brake servo pressure sensor G294*

Auxiliary input signals:
- Cruise control system I/O via J527
- Alternator terminal DFM
- Radiator fan speed 1 (pulse width modulated signal)

* only relevent to vehicles with twin-clutch gearbox and ABS without ESP

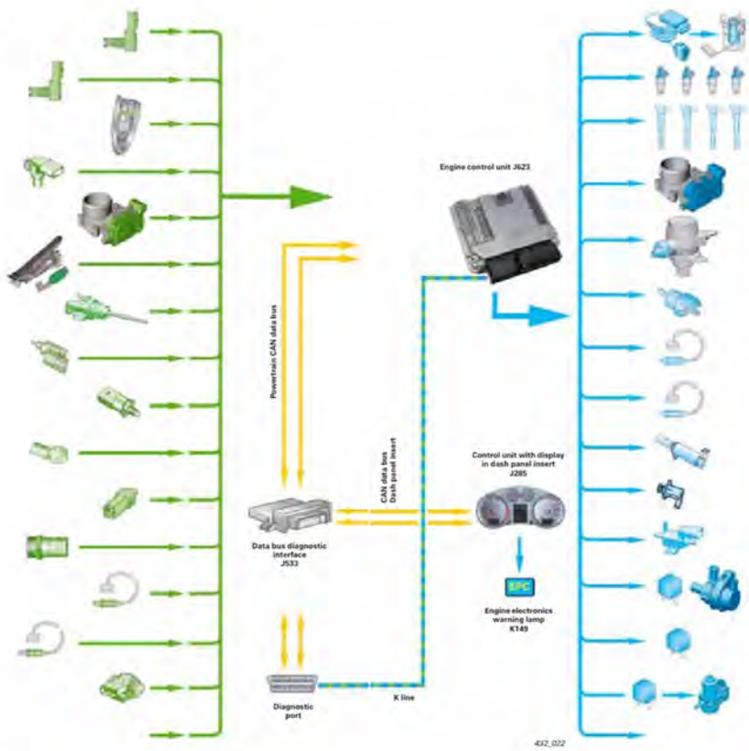

Actuators

Fuel pump control unit J538
Fuel pump (pre-supply pump) G6

Injector, cylinder 1 – 4
N30 – N33

Ignition coil 1 – 4 with output stage
N70, N127, N291, N292

Throttle valve control unit J338
Throttle valve with electric power control G186

Fuel pressure regulating valve N276

Activated charcoal filter solenoid valve 1 N80

Lambda probe heater Z19

Lambda probe 1 heating, after catalytic converter Z29

Inlet camshaft timing adjustment valve -1- N205

Turbocharger divert air valve N249

Charge pressure control solenoid valve N75

Auxiliary coolant pump relay J496
Coolant circulation pump V50

Motronic current supply relay J271

Vacuum pump relay J57
Vacuum pump for brakes V192
(for vehicles with automatic gearbox)

Auxiliary output signal:
- Brake light to onboard power supply control unit J519

48 49

7 Heated Oxygen Sensor

➤ "7.1 Overview - Heated Oxygen Sensor", page 294

➤ "7.2 Heated Oxygen Sensor, Removing and Installing", page 296

7.1 Overview - Heated Oxygen Sensor

Note

- *Coat the new heated oxygen sensors with an assembly paste. This paste must not get into the slots of the heated oxygen sensor body.*
- *Only the threads on a used heated oxygen sensor may be coated with hot bolt paste. This paste must not get into the slots of the heated oxygen sensor body. Hot bolt paste: Refer to the Parts Catalog.*
- *The oxygen sensor wire must always be attached at the same location when installing. Do not let the wire connection come in contact with the exhaust pipe.*

1 - Bracket
- ❑ To plenum chamber
- ❑ Coupling point for the Oxygen Sensor 1 before Catalytic Converter - GX10-

2 - Oxygen Sensor 1 Before Catalytic Converter - GX10-
- ❑ 55 Nm
- ❑ Consists of:

  Heated Oxygen Sensor - G39-

  Oxygen Sensor Heater - Z19-
- ❑ Removing and Installing, Refer to ➤ "7.2.2 Oxygen Sensor 1 before Catalytic Converter GX10 , Removing and Installing", page 296 .

3 - Connector
- ❑ For the Oxygen Sensor 1 before Catalytic Converter - GX10-

4 - Oxygen Sensor 1 after Catalytic Converter - GX7-
- ❑ 55 Nm
- ❑ Consists of:

  Oxygen Sensor after Catalytic Converter - G130-

  Heater for Oxygen Sensor 2 after Catalytic Converter - Z30-

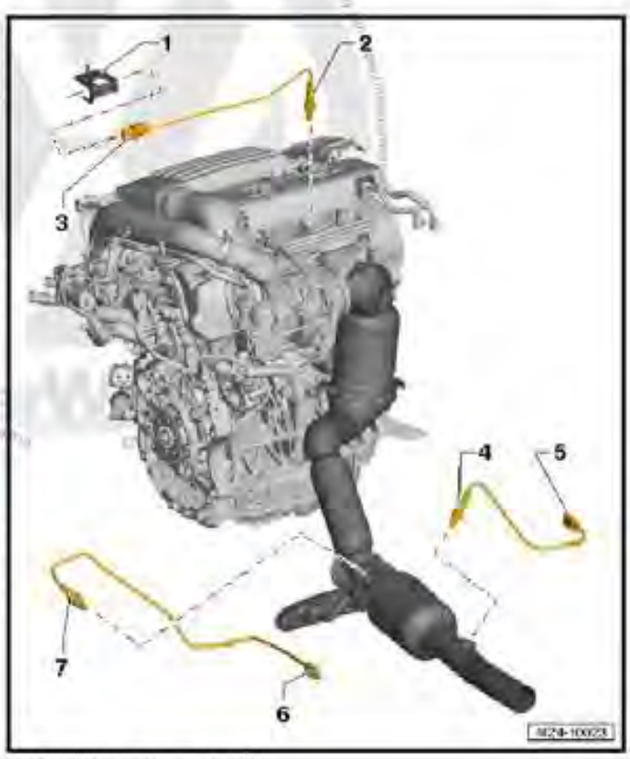

Jetta 2011, Jetta 2015, 4-Cylinder Direct Injection (1.4L Engine, 4V, EA 211, Turbocharger Hybrid) Edition 12.2017

Repair Manual
Jetta 2011 ➤
Jetta 2015 ➤

4-Cylinder Direct Injection (1.4L Engine, 4V, EA 211, Turbocharger, Hybrid)									
Engine ID	CNL A	CRJA							

Edition 12.2017

Figure 126

The ECU J623 receives input from the heated Oxygen Sensor G130 which is an indication of engine operating efficiency, or inefficiency, and thus constitutes waste production data, because the heated Oxygen Sensor G130 is located after the catalytic converter. The ECU J623 calculates an ecological parameter (a particular mode of economic driving that results in the maximum operating efficiency and thus, minimal environmental impact) based on the at least one power consumption value (low level of engine efficiency) and the waste production data (oxygen sensor output).

High voltage system control

The operating strategy for the electric drive motor and combustion engine functions is integrated into the engine control unit J623. The operating strategy automatically selects the optimal operating state for the drive train and thereby avoids operating ranges of the combustion engine with a low level of efficiency. Where only a low torque or power output is required, the engine is switched off.

The engine control unit is connected to the high-voltage battery and the power electronics by the hybrid CAN bus. The state of the high-voltage components is sent to the engine control unit, which controls the electrical ready-to-drive mode. All other information which is required for electric driving or charging the high-voltage battery, such as the load requirements, air conditioning requirements, temperature, etc. are exchanged via the hybrid CAN bus and the powertrain CAN bus.

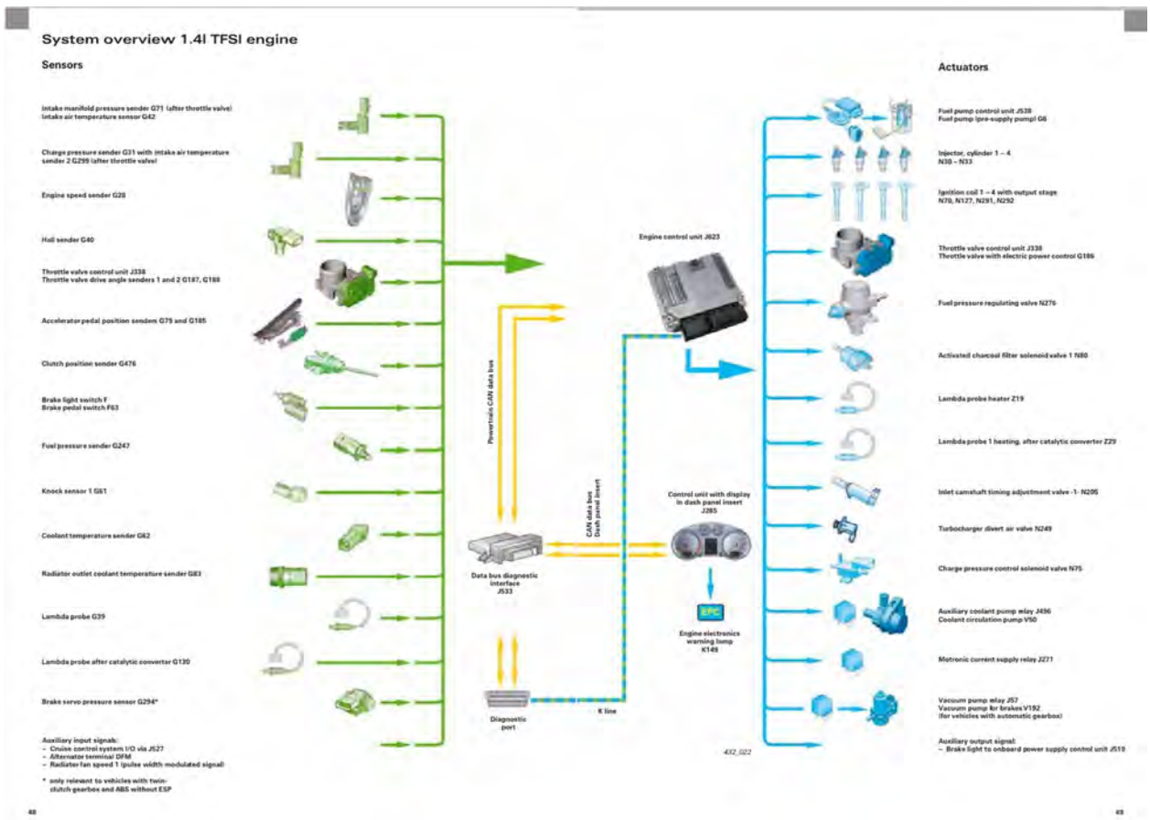
System overview 1.4l TFSI engine
Sensors
Intake manifold pressure sender G71 (after throttle valve)
Intake air temperature sensor G42
Charge pressure sender G31 with intake air temperature sender 2 G299 (after throttle valve)
Engine speed sender G28
Hall sender G40
Throttle valve control unit J338
Throttle valve drive angle senders 1 and 2 G187, G188
Accelerator pedal position senders G79 and G185
Clutch position sender G476
Brake light switch F
Brake pedal switch F63
Fuel pressure sender G247
Knock sensor 1 G61
Coolant temperature sender G62
Radiator outlet coolant temperature sender G83
Lambda probe G39
Lambda probe after catalytic convertor G130
Brake servo pressure sensor G294*
Auxiliary input signals:
– Cruise control system I/O via J527
– Alternator terminal DFM
– Radiator fan speed 1 (pulse width modulated signal)
* only relevant to vehicles with twin-clutch gearbox and ABS without ESP
Powertrain CAN data bus
Data bus diagnostic interface J533
Diagnostic port
CAN data bus Dash panel insert
K line
Engine control unit J623
Control unit with display in dash panel insert J285
EPC
Engine electronics warning lamp K149
432_022
Actuators
Fuel pump control unit J538
Fuel pump (pre-supply pump) G6
Injector, cylinder 1 – 4
N30 – N33
Ignition coil 1 – 4 with output stage
N70, N127, N291, N292
Throttle valve control unit J338
Throttle valve with electric power control G186
Fuel pressure regulating valve N276
Activated charcoal filter solenoid valve 1 N80
Lambda probe heater Z19
Lambda probe 1 heating, after catalytic converter Z29
Inlet camshaft timing adjustment valve -1- N205
Turbocharger divert air valve N249
Charge pressure control solenoid valve N75
Auxiliary coolant pump relay J496
Coolant circulation pump V50
Motronic current supply relay J271
Vacuum pump relay J57
Vacuum pump for brakes V192
(for vehicles with automatic gearbox)
Auxiliary output signal:
– Brake light to onboard power supply control unit J519

Power meter

The power meter shows the power requested by the driver. If the indicator remains in the Eco range, then the vehicle is being moved efficiently and it is possible to drive electrically.

Electric power meter

The electric power meter shows the power available from the electric drive motor. The electric power meter allows the driver to depress the accelerator pedal only so far that the output of 20 kW is not exceeded. This allows the driver to prevent an unwanted start of the combustion engine.

Jetta 2011 ➤ , Jetta 2015 ➤
4-Cylinder Direct Injection (1.4L Engine, 4V, EA 211, Turbocharger, Hybrid) - Edition 12.2017

7 Heated Oxygen Sensor

➤ "7.1 Overview - Heated Oxygen Sensor", page 294

➤ "7.2 Heated Oxygen Sensor, Removing and Installing", page 296

7.1 Overview - Heated Oxygen Sensor

Note

- *Coat the new heated oxygen sensors with an assembly paste. This paste must not get into the slots of the heated oxygen sensor body.*
- *Only the threads on a used heated oxygen sensor may be coated with hot bolt paste. This paste must not get into the slots of the heated oxygen sensor body. Hot bolt paste: Refer to the Parts Catalog.*
- *The oxygen sensor wire must always be attached at the same location when installing. Do not let the wire connection come in contact with the exhaust pipe.*

1 - Bracket
- ❑ To plenum chamber
- ❑ Coupling point for the Oxygen Sensor 1 before Catalytic Converter - GX10-

2 - Oxygen Sensor 1 Before Catalytic Converter - GX10-
- ❑ 55 Nm
- ❑ Consists of:

  Heated Oxygen Sensor - G39-

  Oxygen Sensor Heater - Z19-
- ❑ Removing and installing, Refer to ➤ "7.2.2 Oxygen Sensor 1 before Catalytic Converter GX10 , Removing and Installing", page 296 .

3 - Connector
- ❑ For the Oxygen Sensor 1 before Catalytic Converter - GX10-

4 - Oxygen Sensor 1 after Catalytic Converter - GX7-
- ❑ 55 Nm
- ❑ Consists of:

  Oxygen Sensor after Catalytic Converter - G130-

  Heater for Oxygen Sensor 2 after Catalytic Converter - Z30-

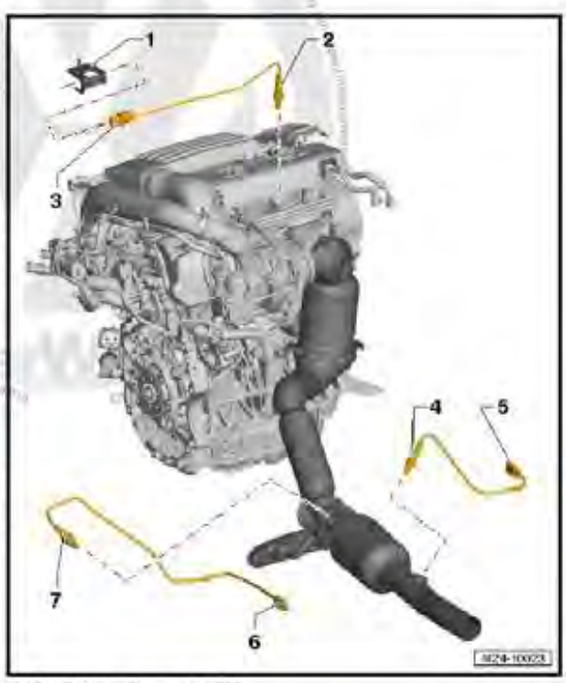

Upon information and belief, the ’482 patent Accused Instrumentalities calculate the ecological parameter is an adjusted mean of the sum of the deviations of the at least one power consumption value (low level of engine efficiency) with respect to a reference value corresponding to the at least one power consumption value.

Based upon the totality of the foregoing evidence, and based further upon information and belief, the ’482 patent Accused Instrumentalities include “a device for measuring power consumption and performance with respect to the environment of a power-consuming unit comprising a data introduction module, which receives at least one power consumption value, measured by a

measurement apparatus of the power-consuming unit; an input device for inputting waste production data; a display screen; and a computer with a processor and a memory device having therein a plurality of instructions that, when executed by the processor, cause the processor to (a) receive the at least one power consumption value from the data introduction module, (b) receive the waste production data, (c) calculate an ecological parameter based on the at least one power consumption value and the waste production data, and (d) operate the display screen to display the calculated ecological parameter, wherein the calculated ecological parameter is an adjusted mean of the sum of the deviations of the at least one power consumption value with respect to a reference value corresponding to the at least one power consumption value."

Figure 127

COUNT XIX – INFRINGEMENT OF U.S. PATENT NO. 6,557,540

133. The allegations set forth in the foregoing paragraphs 1 through 132 are incorporated into this Nineteenth Claim for Relief.

134. On May 6, 2003, U.S. Patent No. 6,557,540 ("the '540 patent"), entitled "Method of Calculating a Valve Timing Command for an Engine," was duly and legally issued by the United States Patent and Trademark Office. A true and correct copy of the '540 patent is attached as Exhibit 19.

135. Michigan Motor is the assignee and owner of the right, title and interests in and to the '540 patent, including the right to assert all causes of action arising under said patents and the right to any remedies for infringement of them.

136. Upon information and belief, Defendants have directly infringed at least claims 1, 7, 11, and 14 of the '540 patent by making, using, selling, importing and/or providing and causing to be used the 2011-2015 Volkswagen Jetta (2.0L) direct injection engine (the "'540 patent Accused Instrumentalities").

137. In particular, claim 1 of the '540 patent recites a method for calculating a valve timing command for an engine of a vehicle, comprising: obtaining an engine performance command; receiving an environmental conditions signal; determining a valve feedforward term based on the engine performance command and the environmental conditions signal; receiving

an engine performance feedback; calculating a valve feedback term based on the engine performance command and the engine performance feedback; and calculating a valve timing command based on the valve feedforward term and the valve feedback term.

138. On information and belief, the ’540 patent Accused Instrumentalities infringe claim 1 of the ’540 patent. The ’540 patent Accused Instrumentalities practice a method for calculating a valve timing command for an engine of a vehicle, comprising (*Figure 128*): obtaining an engine performance command (*Figure 129*); receiving an environmental conditions signal (*Figure 130*); determining a valve feedforward term based on the engine performance command and the environmental conditions signal (*Figure 131*); receiving an engine performance feedback (*Figure 132*); calculating a valve feedback term based on the engine performance command and the engine performance feedback (*Figure 133*); and calculating a valve timing command based on the valve feedforward term and the valve feedback term (*Figure 134*).

As depicted below the Engine Control Module (ECM) calculates valve timing for an engine of a vehicle.

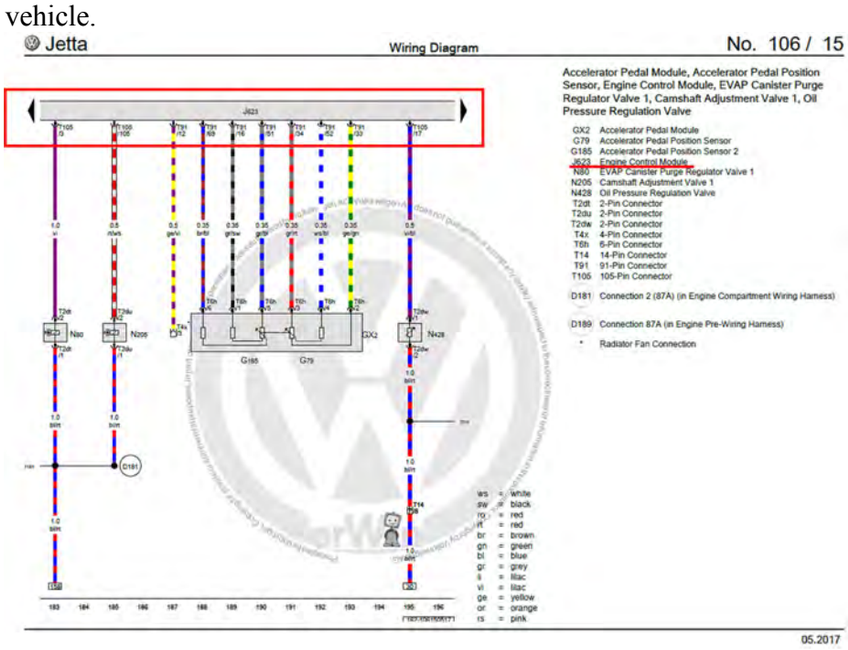

Figure 128

For example, as shown below, the Accelerator Pedal Position Sensor provides a signal to the ECM for the performance commands from the operator.

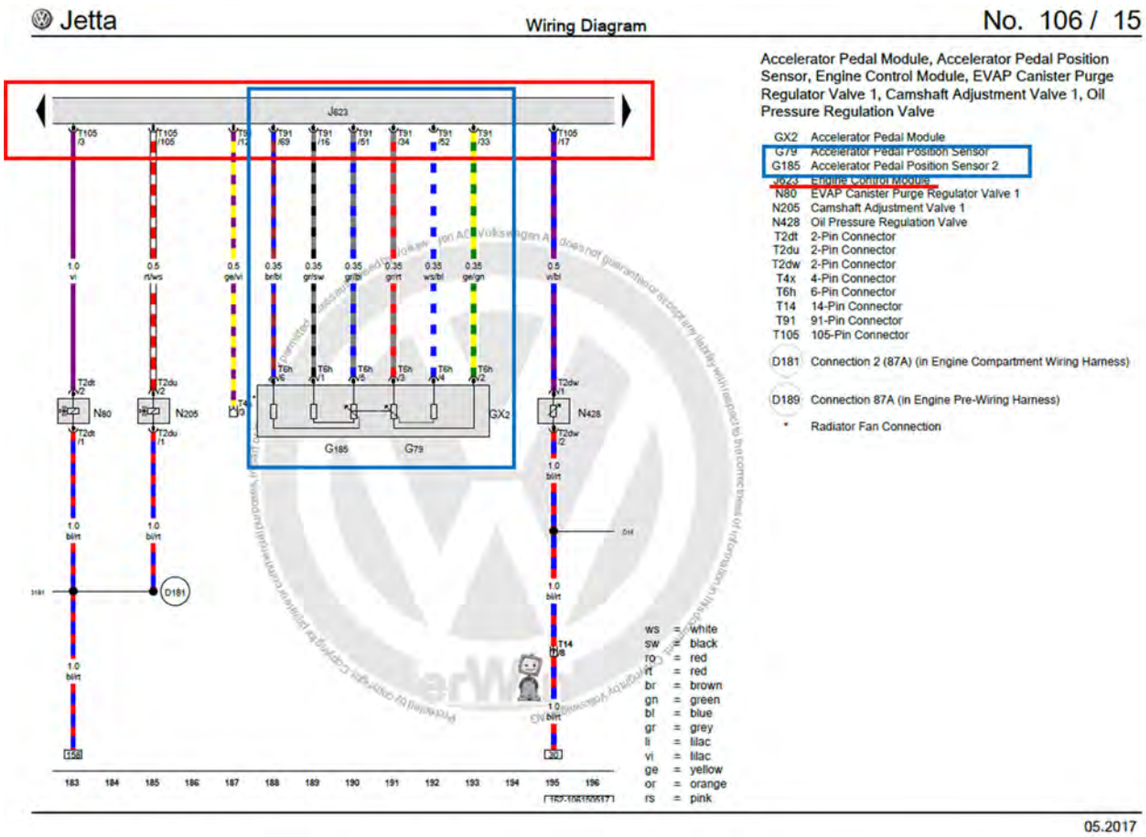

For example, as shown below, the Cruise Control Switch provides a signal to the ECM for the performance commands based on the cruise control settings.

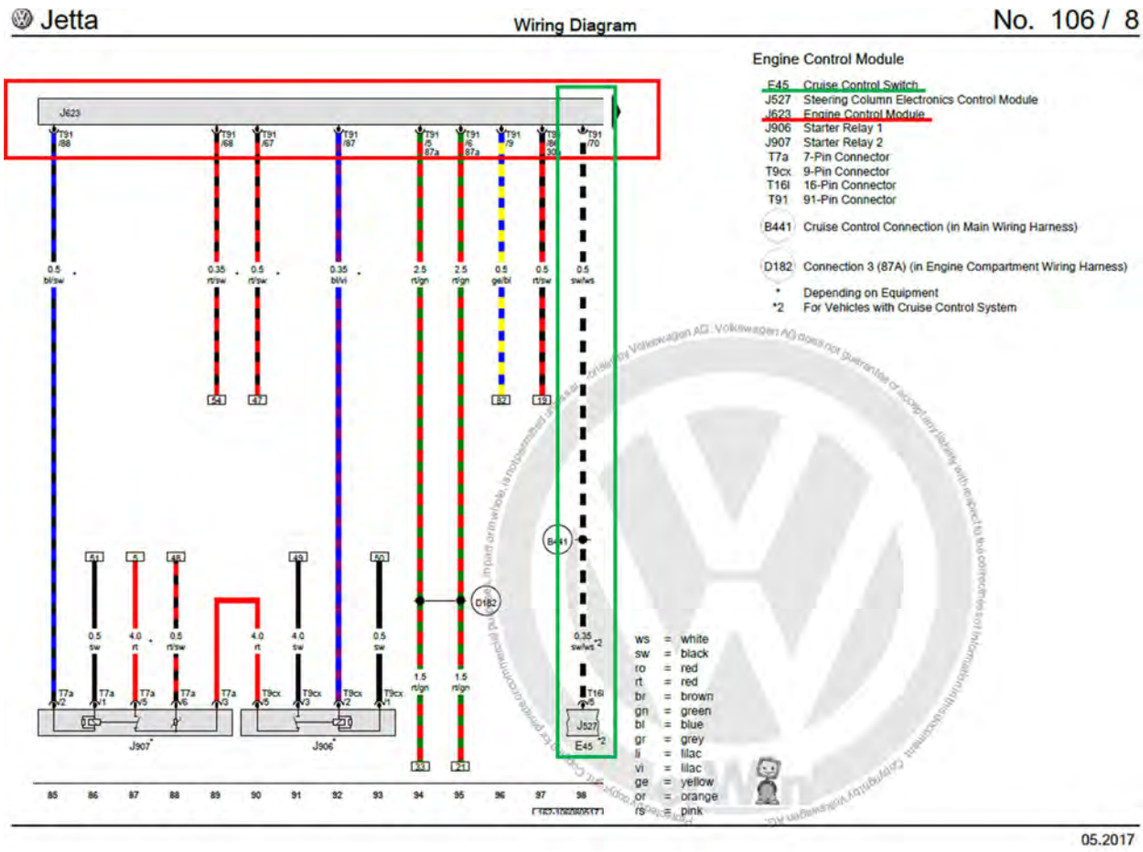

For example, as shown below, an engine performance command (traction control signal and acceleration signal) is obtained by the ECM.

How does Volkswagen Electronic Stability Control work?

During the 2009 model year Volkswagen made the decision to add Electronic Stability Control as a safety feature on its entire lineup, a full three years before it became required on all new vehicles for 2012. You won't find a new vehicle without this feature in much the same way you can expect the safety features to always include airbags, but what is it and **how does Volkswagen Electronic Stability Control work**?

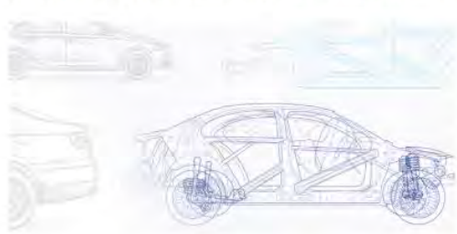

Many people are already aware of the anti-lock brake feature, which prevents wheels from locking up when braking, and traction control, which is meant to prevent wheels from spinning. Electronic stability control (ESC) uses the same hardware as these other safety features, but also uses a yaw rate, steering angle and acceleration sensors to detect whether the vehicle is headed in the direction the driver is attempting to make it go in. Whether the road conditions are slipper or you're driving at high speeds, when the ESC system detects a slip, brakes are automatically applied to just the wheels that aren't going in the right direction.

Read More: VW Technology & Features

https://www.newcenturyvw.com/blog/how-does-volkswagen-electronic-stability-control-work/

For example, as shown below, the electronic stability program (ESP) sensor unit (G419), and ABS control module and wheel speed sensors obtain engine performance commands.

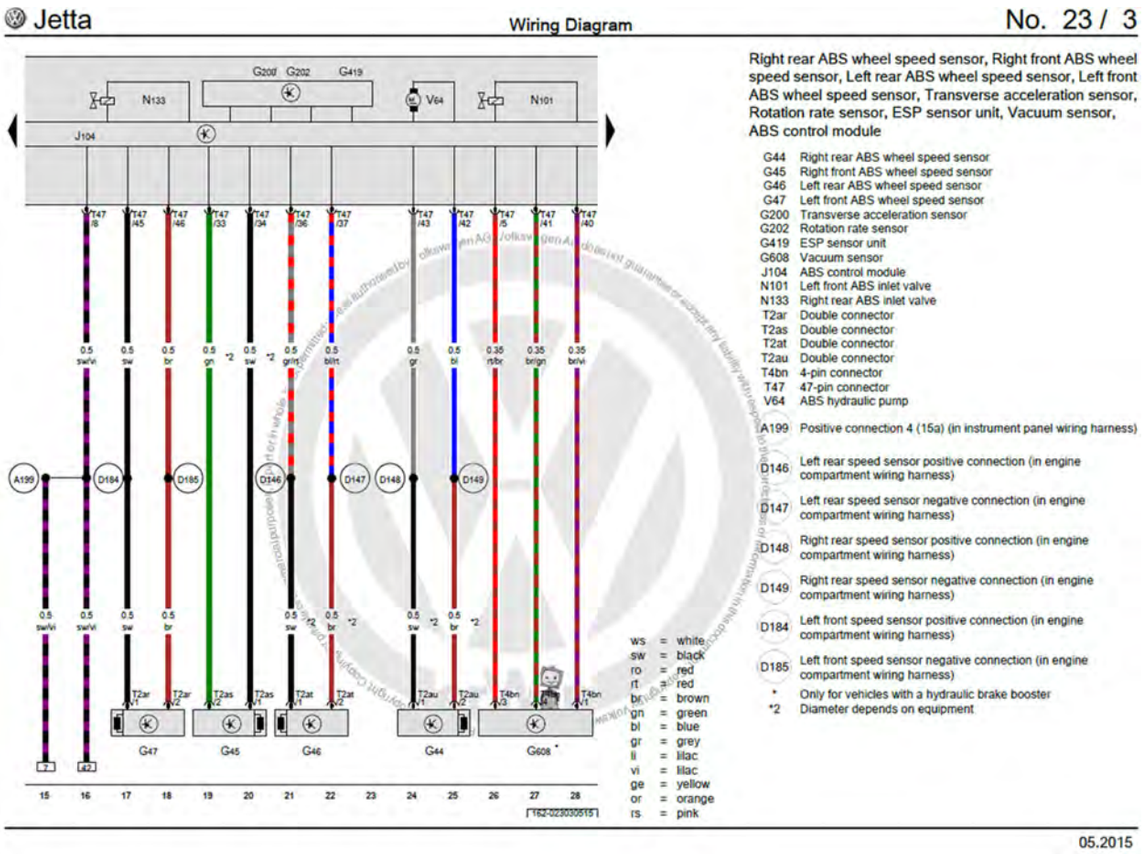

Figure 129

For example, as depicted below, the Manifold Absolute Pressure (MAP) sensors (G71) measure barometric pressure during key on, engine off (KOEO) which is received by the ECM (J623). Also, the Intake Air Temperature Sensor (IATS; G42) senses the temperature of the incoming air which is received by the ECM (J623).

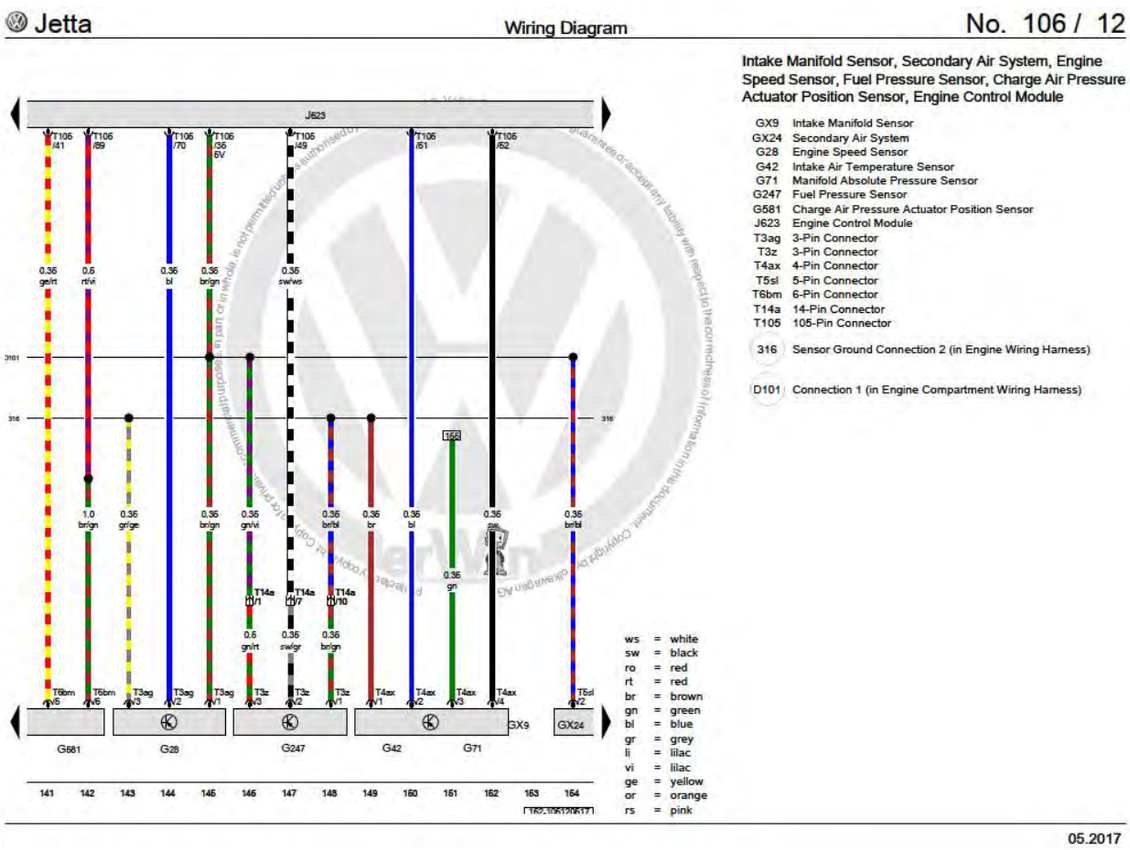

Figure 130

For example, using the Accelerator Pedal Module (GX2), which controls the Accelerator Pedal Position Sensor (G79) and the Accelerator Position Sensor 2 (G185), engine performance commands are sent, via the Engine Control Module (ECM; J623) and the environmental conditions signal(s) are sent using environmental commands from the IATS and MAPS (shown above) which send the environmental conditions signals to the ECM to determine a valve feed forward term.

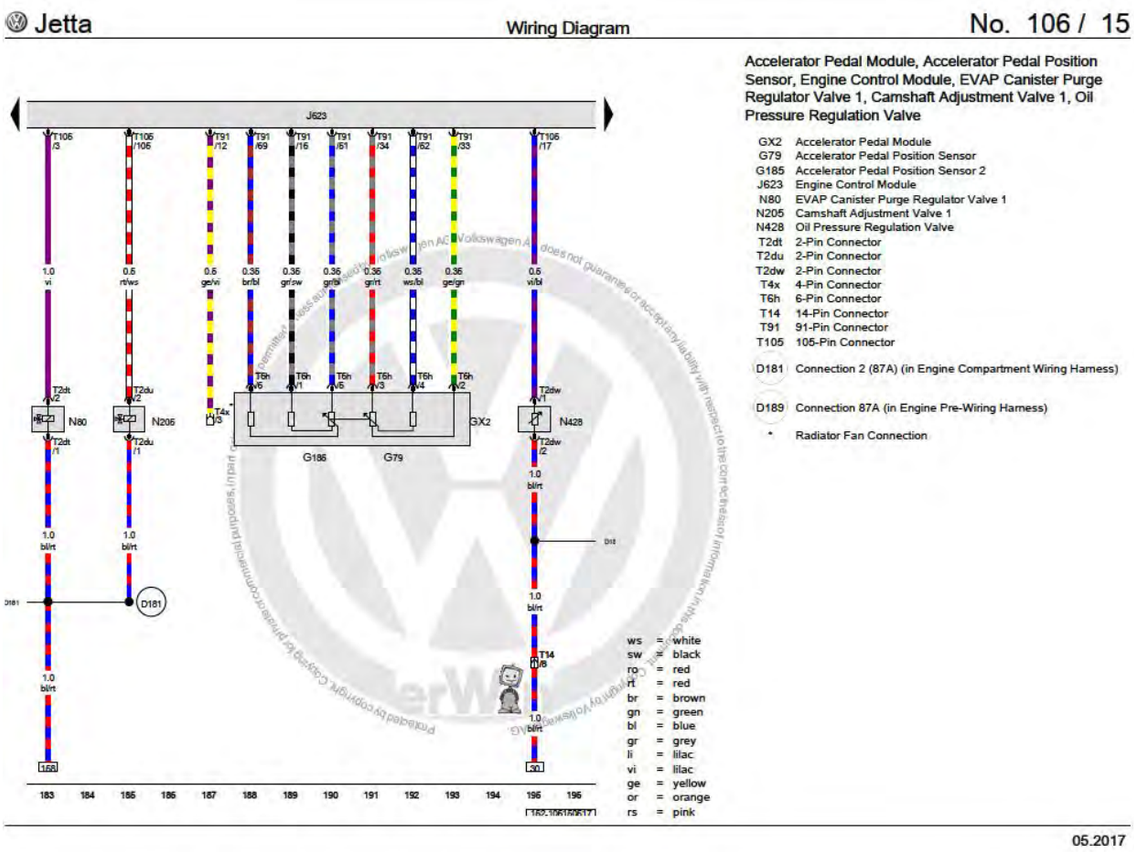

Figure 131

For example, the Engine Control Module (ECM; J623) receives engine performance feedback from various sensors including the engine speed sensor (G28) shown below.

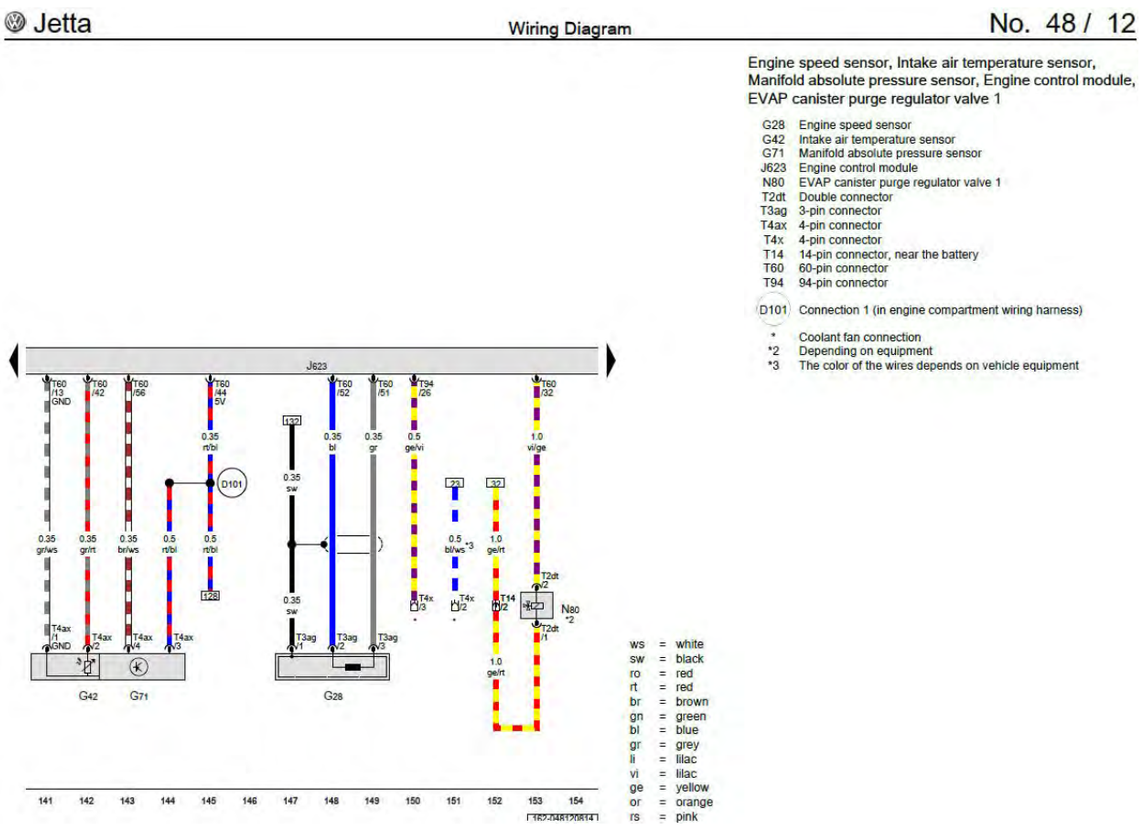

Figure 132

For example, as shown below the ECM (J623) calculates a valve feedback term which is communicated to the camshaft adjustment valve (N205) capable of advancing or retarding the camshaft (adjusting itself) based on a performance command (i.e. from the Accelerator Pedal Module) and the performance feedback (i.e. engine speed sensor (G28 (shown above)).

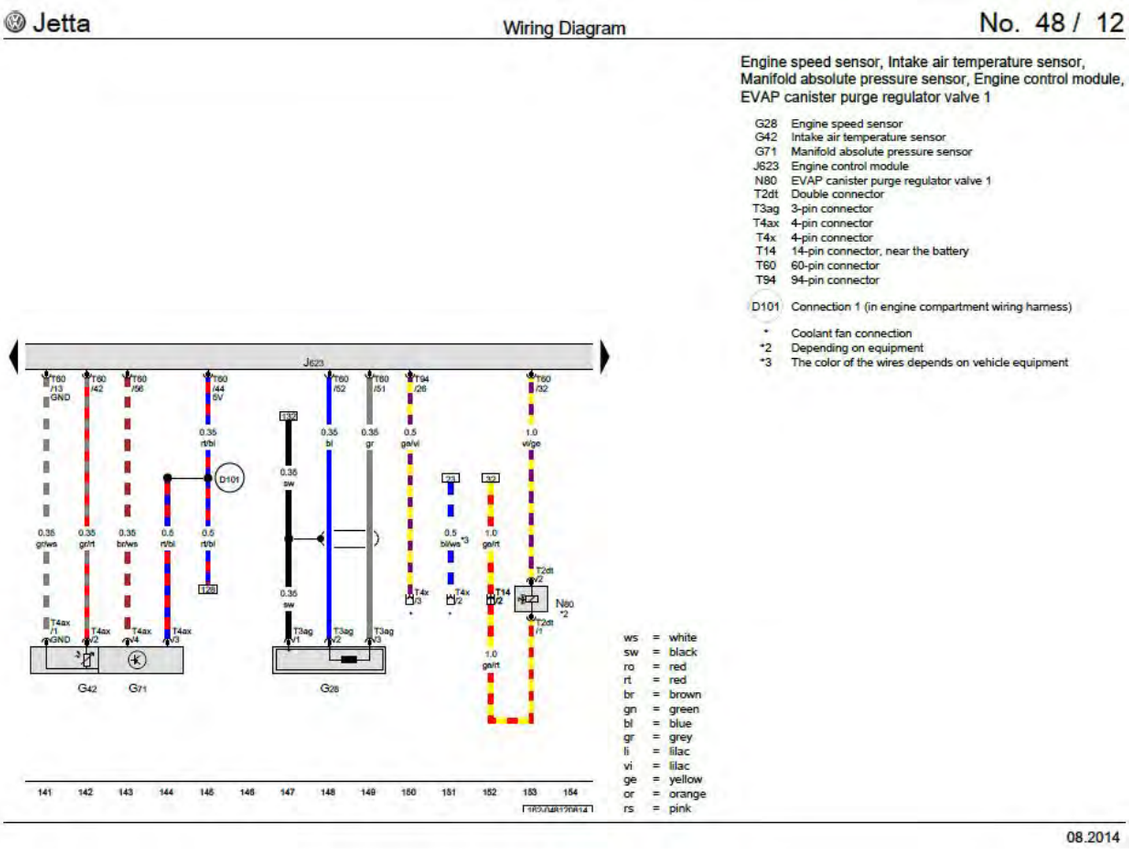

Figure 133

For example, as shown below the ECM (J623) calculates a valve timing command which is communicated to the camshaft adjustment valve (N205) based on data from sensors such as the Accelerator Pedal Position Sensor (G79) and Accelerator Pedal Position Sensor 2 (G185) and the Accelerator Pedal Module (GX2)(feedforward term) and the engine performance based on engine speed sensor input (G28 (shown above)) (valve feedback term).

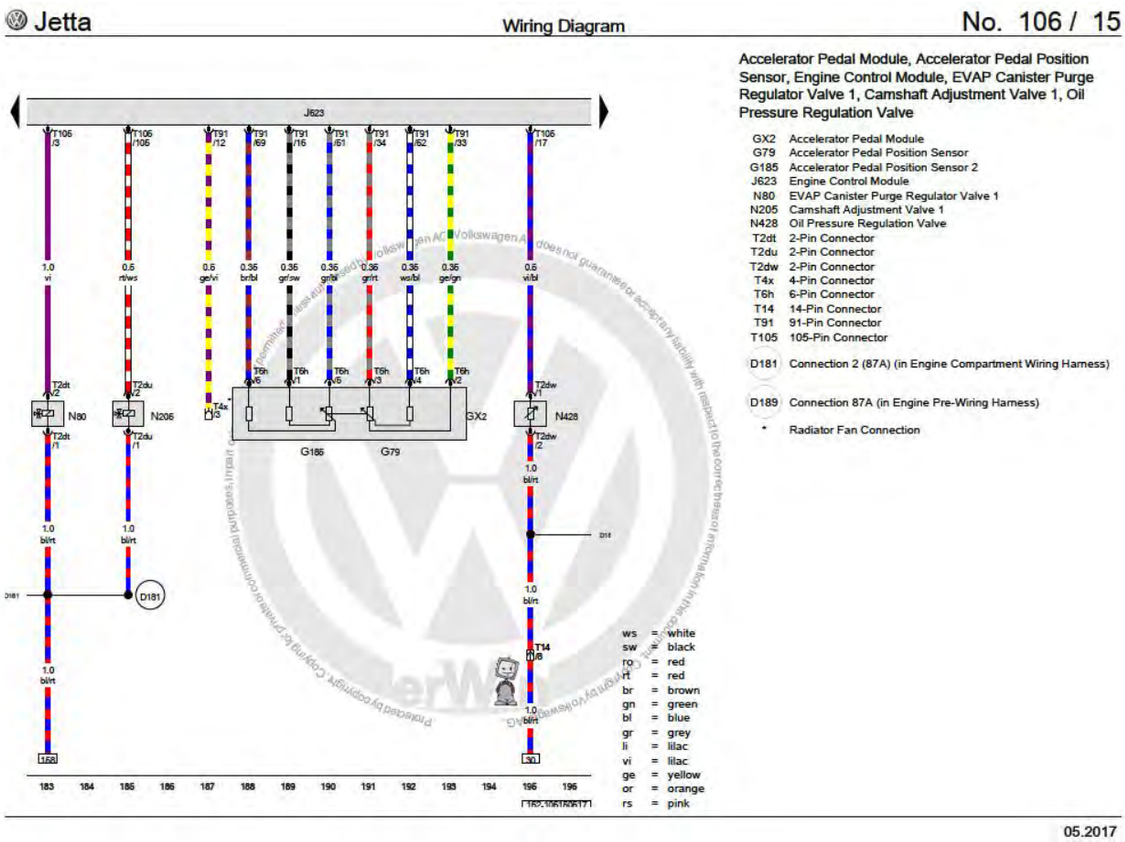

Figure 134

139. In particular, claim 7 of the ’540 patent recites the method of claim 1 wherein said receiving an engine performance feedback includes receiving engine speed data.

140. On information and belief, the ’540 patent Accused Instrumentalities infringe claim 7 of the ’540 patent. The ’540 patent Accused Instrumentalities practice the method of claim 1 wherein said receiving an engine performance feedback includes receiving engine speed data (*Figure 135*).

As shown below, the engine speed sensor (G28) provides engine performance feedback that is sent to the ECM (J623).

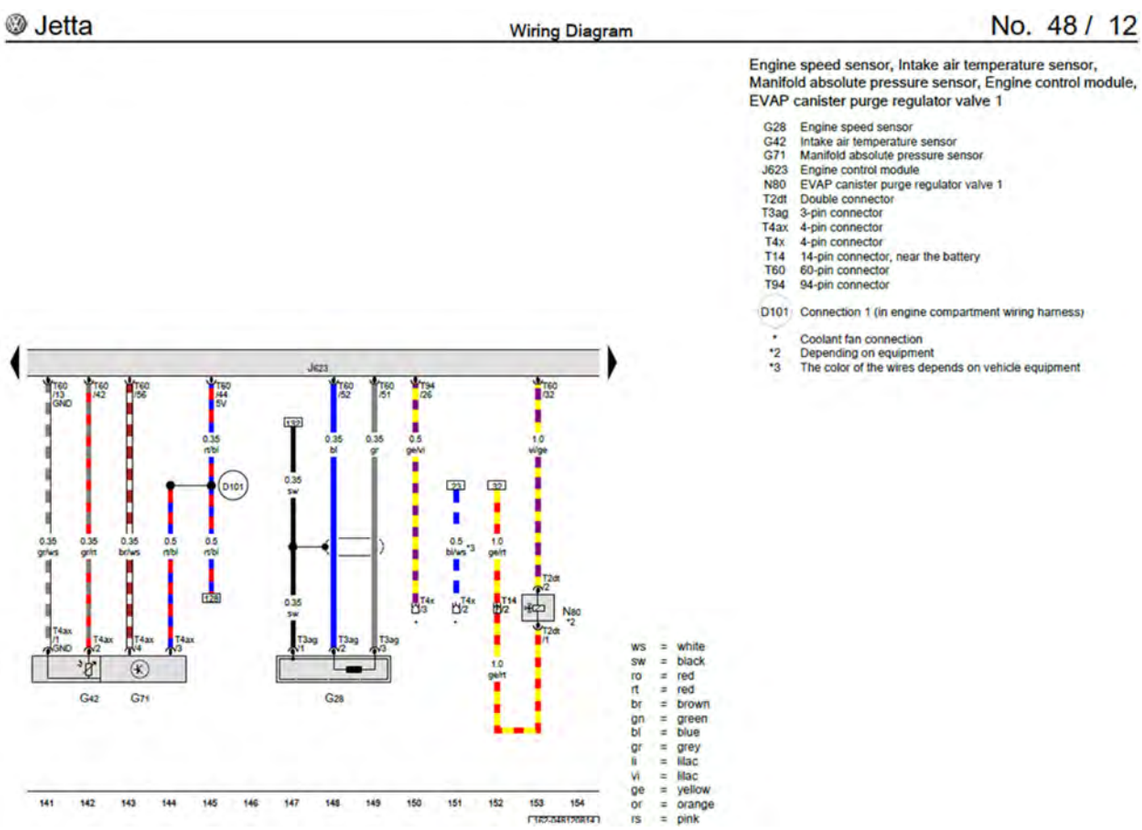

Figure 135

141. In particular, claim 11 of the ’540 patent recites the method of claim 1 further comprising receiving fuel conversion data.

142. On information and belief, the ’540 patent Accused Instrumentalities infringe claim 11 of the ’540 patent. The ’540 patent Accused Instrumentalities practice the method of claim 1 further comprising receiving fuel conversion data (*Figure 136*).

For example, the Heated Oxygen Sensor (G39) and the Oxygen sensor after three-way catalytic converter (G130) send fuel conversion data to the ECM (J623).

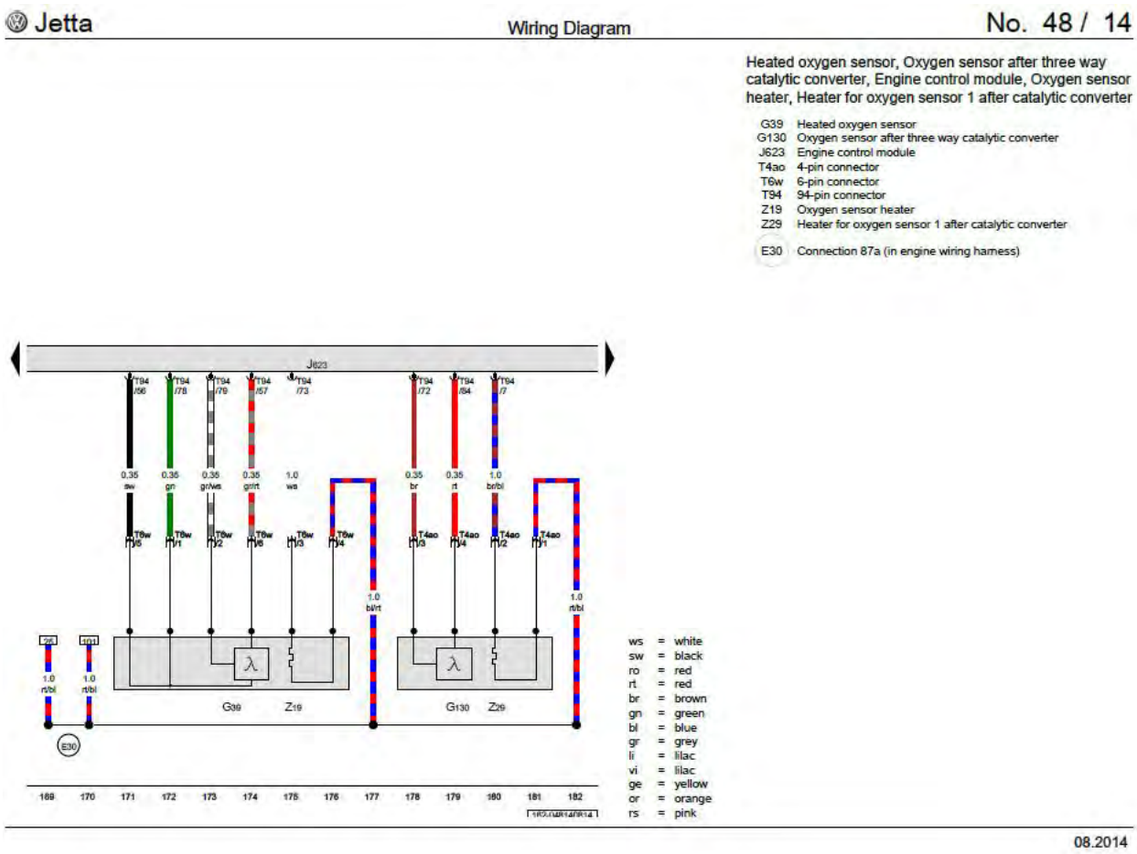

Figure 136

143. In particular, claim 14 of the ’540 patent recites the method of claim 1 further comprising receiving engine emissions data.

144. On information and belief, the ’540 patent Accused Instrumentalities infringe claim 14 of the ’540 patent. The ’540 patent Accused Instrumentalities practice the method of claim 1 further comprising receiving engine emissions data. (*Figure 137*).

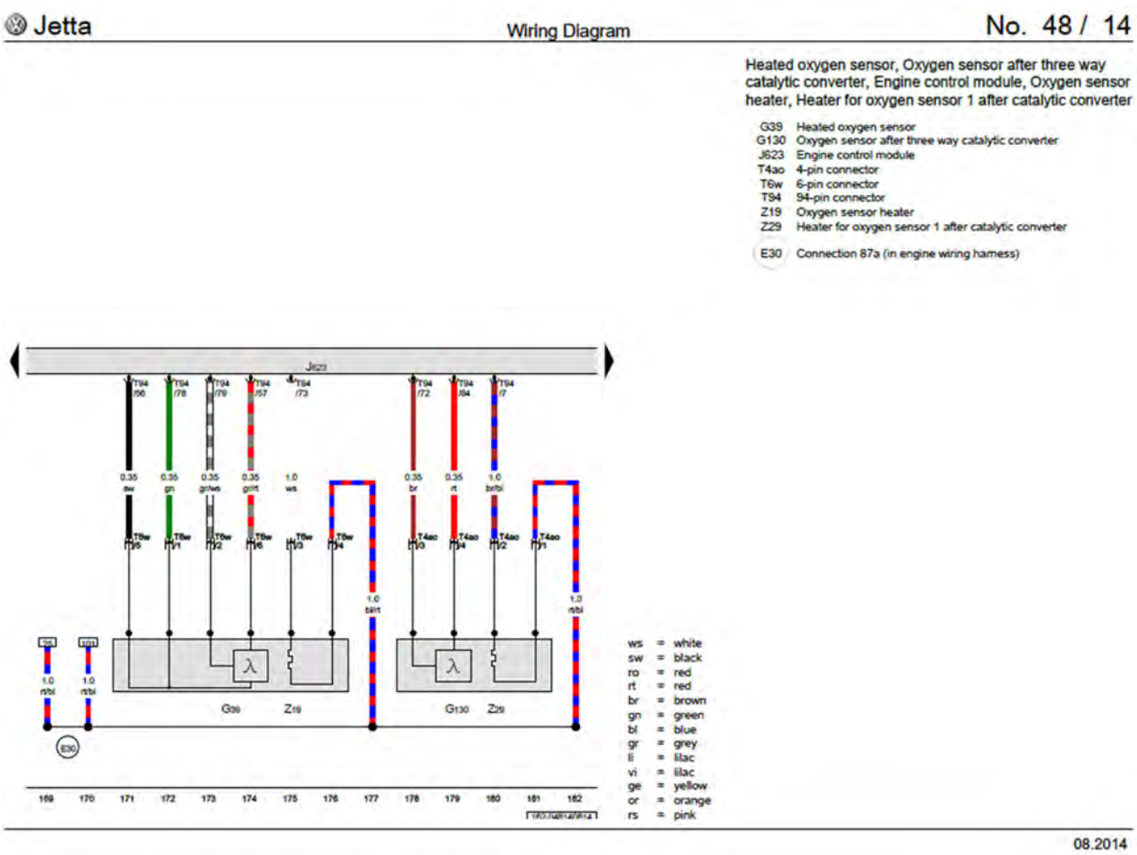

Figure 137

Based upon the totality of the foregoing evidence, and based further upon information and belief, the ’540 patent Accused Instrumentalities practice “a method for calculating a valve timing command for an engine of a vehicle, comprising: obtaining an engine performance command; receiving an environmental conditions signal; determining a valve feedforward term based on the engine performance command and the environmental conditions signal; receiving an engine performance feedback; calculating a valve feedback term based on the engine performance command and the engine performance feedback; and calculating a valve timing command based on the valve feedforward term and the valve feedback term.”

COUNT XX – INFRINGEMENT OF U.S. PATENT NO. 6,345,604

145. The allegations set forth in the foregoing paragraphs 1 through 144 are incorporated into this Twentieth Claim for Relief.

146. On Feb. 12, 2002, U.S. Patent No. 6,345,604 (“the ’604 patent”), entitled “Electronically Controlled Throttle Valve with Commanded Default Position for the Throttle Valve of an Internal Combustion Engine,” was duly and legally issued by the United States

Patent and Trademark Office. A true and correct copy of the ’604 patent is attached as Exhibit 20.

147. Michigan Motor is the assignee and owner of the right, title and interests in and to the ’604 patent, including the right to assert all causes of action arising under said patents and the right to any remedies for infringement of them.

148. Upon information and belief, Defendants have directly infringed at least claim 1 of the ’604 patent by making, using, selling, importing and/or providing and causing to be used the 2013-2018 Passat Sedan, 2012-2016 CC, 2012-2017 Touareg, 2018-2019 Atlas, and 2012-2016 Porsche Cayenne (the “’604 patent Accused Instrumentalities”).

149. In particular, claim 1 of the ’604 patent recites a throttle controller for an internal combustion engine having a throttle body including an adjustable throttle valve in an intake air passage; a throttle valve actuator motor connected to the throttle valve for activating the throttle valve between a closed position and a full-open position; a throttle position sensor connected to the throttle valve for developing a position signal indicating the actual throttle valve position; an ignition switch for initiating engine startup and engine shutdown and for developing an engine shutdown signal; an accelerator pedal and an accelerator position sensor for developing an actual accelerator pedal position signal; and an electronic microprocessor comprising an input signal conditioning circuit receiving the engine shutdown signal, the electronic microprocessor including means for developing a throttle valve actuator motor control signal responsive to the presence of an engine shutdown signal whereby the throttle valve actuator motor adjusts the throttle plate to a throttle plate position between the closed position and the fully open position to prevent throttle plate freezing when the engine is shut down.

150. On information and belief, the ’604 patent Accused Instrumentalities infringe claim 1 of the ’604 patent. The ’604 patent Accused Instrumentalities comprise a throttle

controller for an internal combustion engine having a throttle body including an adjustable throttle valve in an intake air passage (*Figure 138*); a throttle valve actuator motor connected to the throttle valve for activating the throttle valve between a closed position and a full-open position (*Figure 139*); a throttle position sensor connected to the throttle valve for developing a position signal indicating the actual throttle valve position (*Figure 140*); an ignition switch for initiating engine startup and engine shutdown and for developing an engine shutdown signal (*Figure 141*); an accelerator pedal and an accelerator position sensor for developing an actual accelerator pedal position signal (*Figure 142*); and an electronic microprocessor comprising an input signal conditioning circuit receiving the engine shutdown signal (*Figure 143*), the electronic microprocessor including means for developing a throttle valve actuator motor control signal responsive to the presence of an engine shutdown signal whereby the throttle valve actuator motor adjusts the throttle plate to a throttle plate position between the closed position and the fully open position to prevent throttle plate freezing when the engine is shut down (*Figure 144*).

The ’604 patent Accused Instrumentalities comprise a Throttle Valve Control Module (J338) which communicates with the Engine Control Module (ECM; J623).

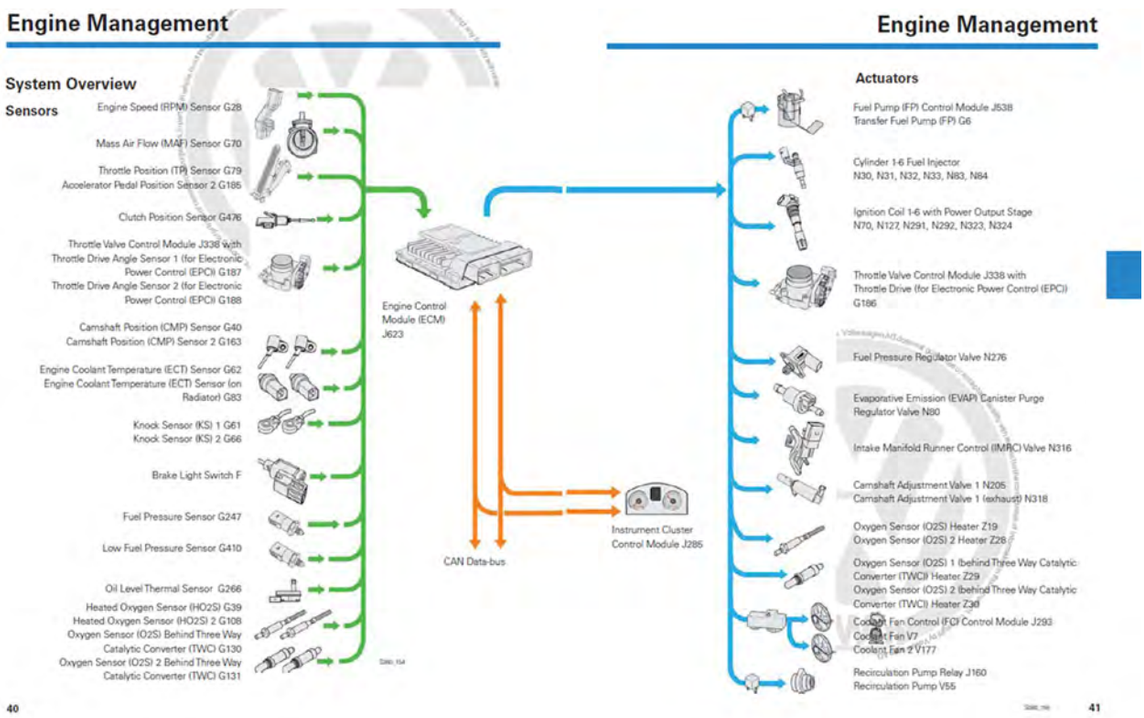

The throttle body includes an adjustable throttle valve in an intake air passage.

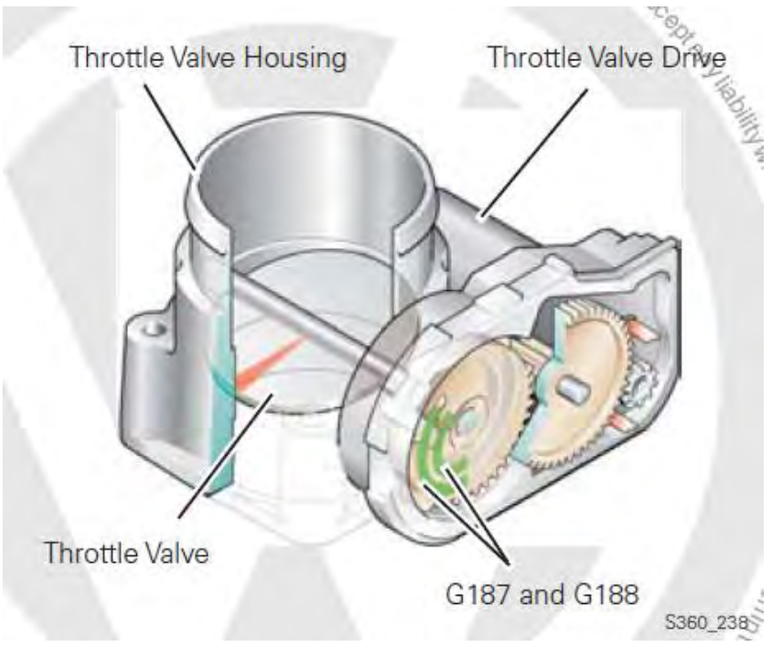

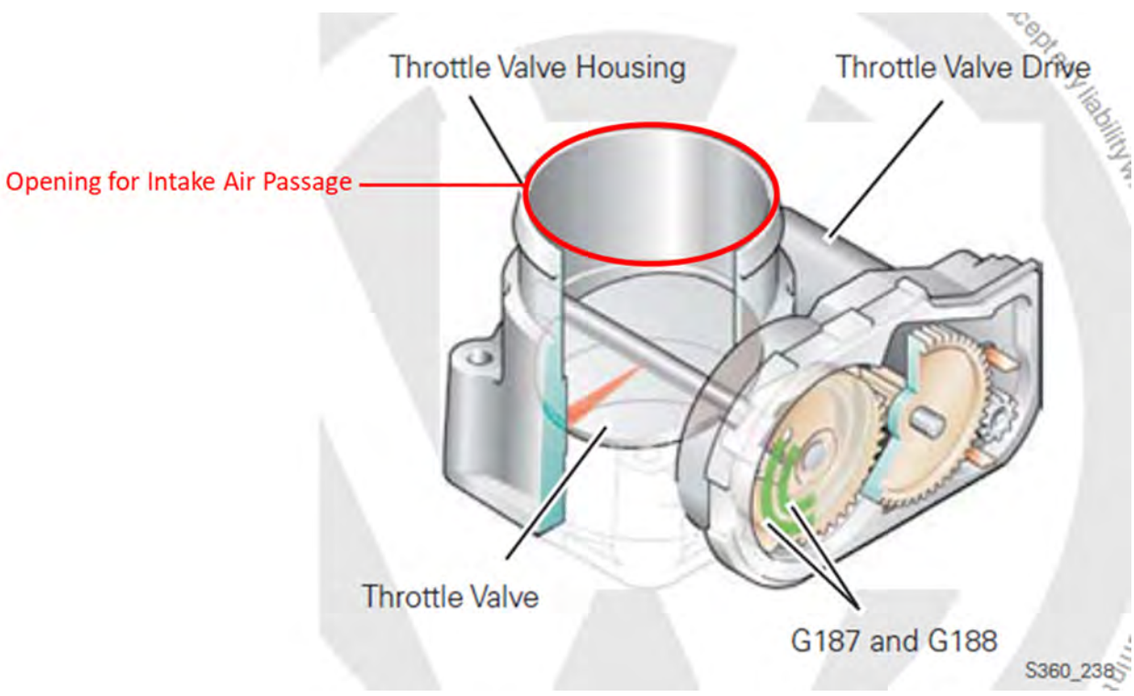

Figure 138

The Throttle Valve Drive is a throttle valve actuator motor connected to the throttle valve for activating the throttle valve between a closed position and a full-open position.

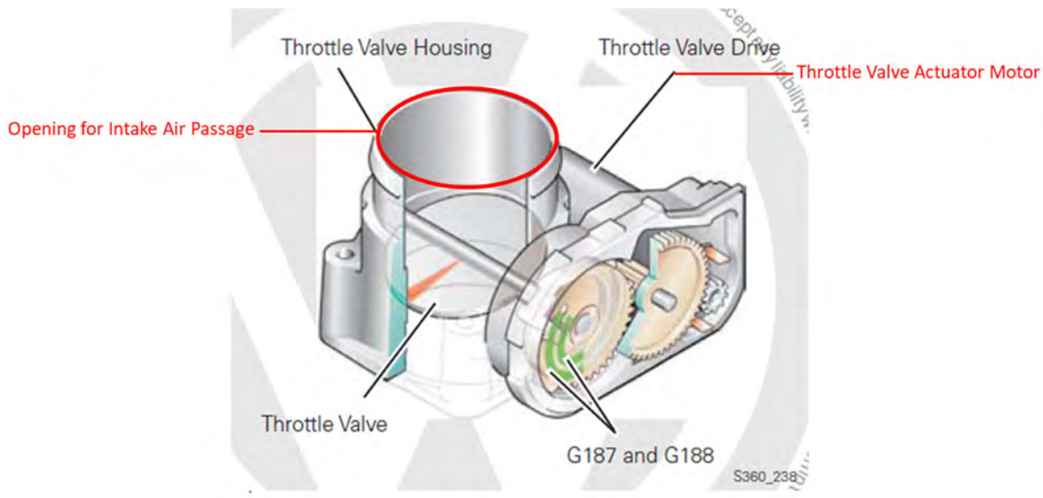

https://www.youtube.com/watch?v=sOKJ72HnL14

Exemplary throttle valve closed position

Exemplary throttle valve open position
8632
MORE VIDEOS

Figure 139

For example, as demonstrated in the exemplary images below, the ’604 patent Accused Instrumentalities comprise a Throttle Drive Angle Sensor 1 (G187) and Throttle Drive Angle Sensor 2 (G188) connected to the Throttle Valve Control Module (J338) and develop a position signal indicating the actual throttle valve position.

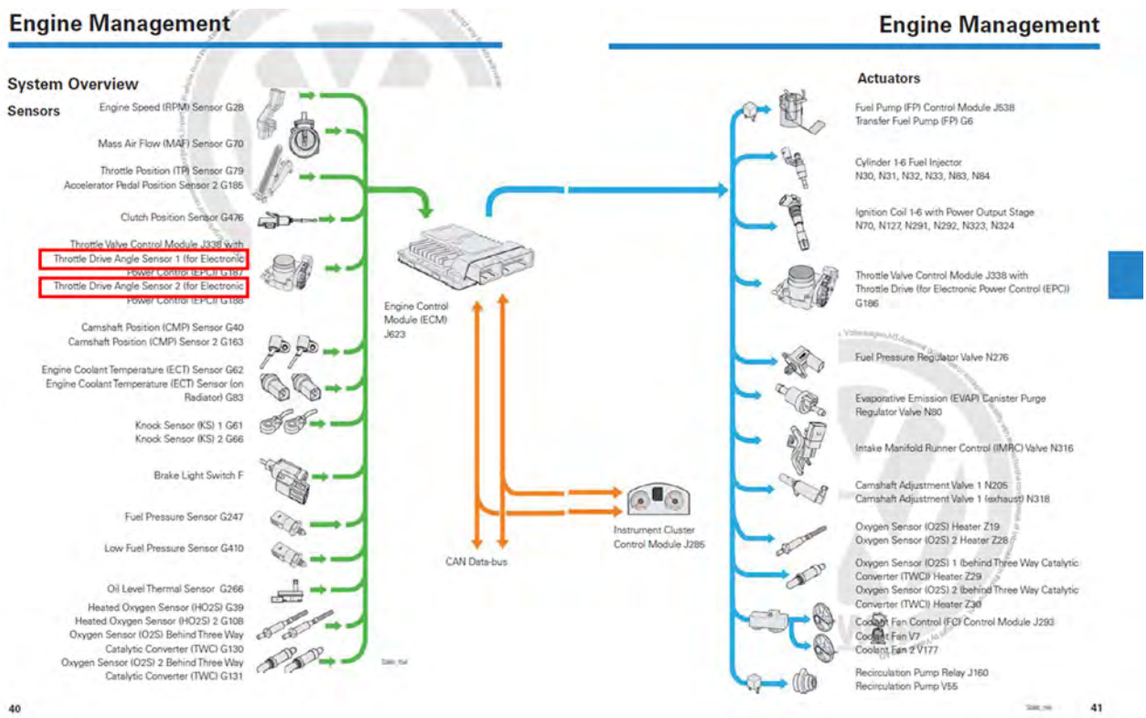

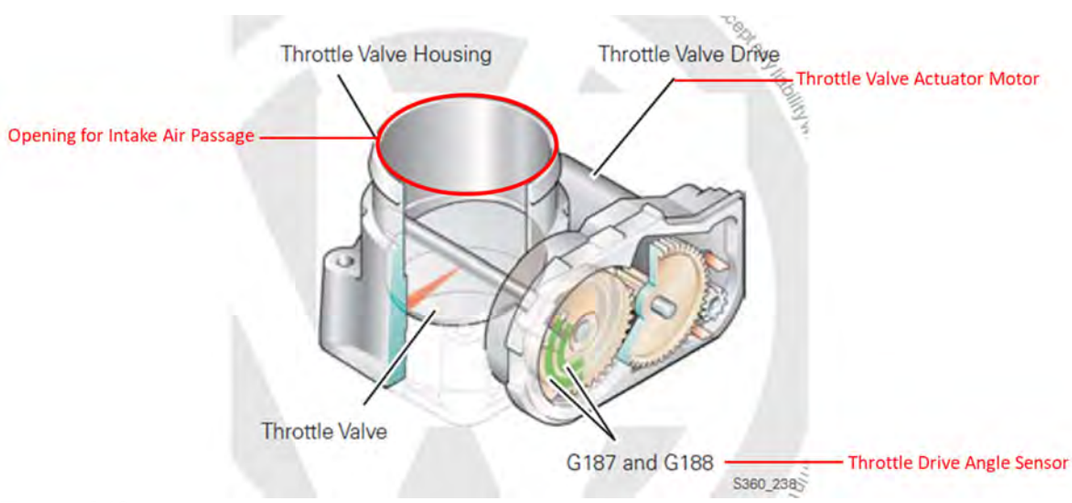

Figure 140

The ignition switch initiates engine start up (being switched on) and engine shutdown (being switched off).

Vehicle key positions in the ignition switch

Fig. 111 In the ignition switch: Vehicle key positions.

Please first read and note the introductory information and heed the WARNINGS

If there is no vehicle key in the ignition, the steering column is locked.

Vehicle key position ⇒ fig. 111

(0) Ignition switched off. Steering column lock engaged. The vehicle key can be removed.
(1) Ignition switched off. Steering column lock disengaged. Vehicle key can be removed.
(2) Ignition is switched on. Vehicle key can be removed from ignition switch.
(3) Start the engine. Once the engine has started, the vehicle key stays in this position. To remove the vehicle key, push it fully into the ignition switch. When released, the vehicle key returns to position (1) the engine is switched off.

If you use the wrong key

If an unauthorized vehicle key has been inserted into the ignition switch, it can be removed as follows:

- *Automatic transmission*: The vehicle key cannot be removed from the ignition unless both the key and the selector lever have been moved to the correct position. Press the release button on the transmission selector lever, move the selector lever to the Park **(P)** position, and release the button. The vehicle key can now be removed.
- *Manual transmission*: Pull out the vehicle key.

As evidenced by the vehicle notice below, once the engine has been switched off a signal is sent to the radiator fan to sufficiently cool the engine, the ’604 patent Accused Instrumentalities comprise a n ignition switch for initiating engine startup and engine shutdown and for developing an engine shutdown signal.

NOTICE

If the vehicle has been driven hard for a long time, the engine could overheat when it is stopped. To reduce the risk of engine damage, let the engine idle in Neutral for about 2 minutes before you switch off the ignition.

If the ignition is switched on or the engine is running and the driver door is opened, a chime sounds. The chime is also a reminder to switch off the engine and turn off the ignition before leaving and locking the vehicle from the outside.

On vehicles with automatic transmissions, the vehicle key can only be removed from the ignition when the transmission is in Park **(P)**.

After the engine has been switched off, the radiator fan in the engine compartment may keep running for several minutes, or may start running after the vehicle has been parked for a while, even if the ignition is switched off and the vehicle key has been removed. The radiator fan shuts off automatically when the engine has cooled down enough.

Figure 141

For example, as demonstrated in the exemplary images below, the ’604 patent Accused Instrumentalities comprise an accelerator pedal and an Accelerator Pedal Position Sensor 2 (G185) for developing an actual accelerator pedal position signal.

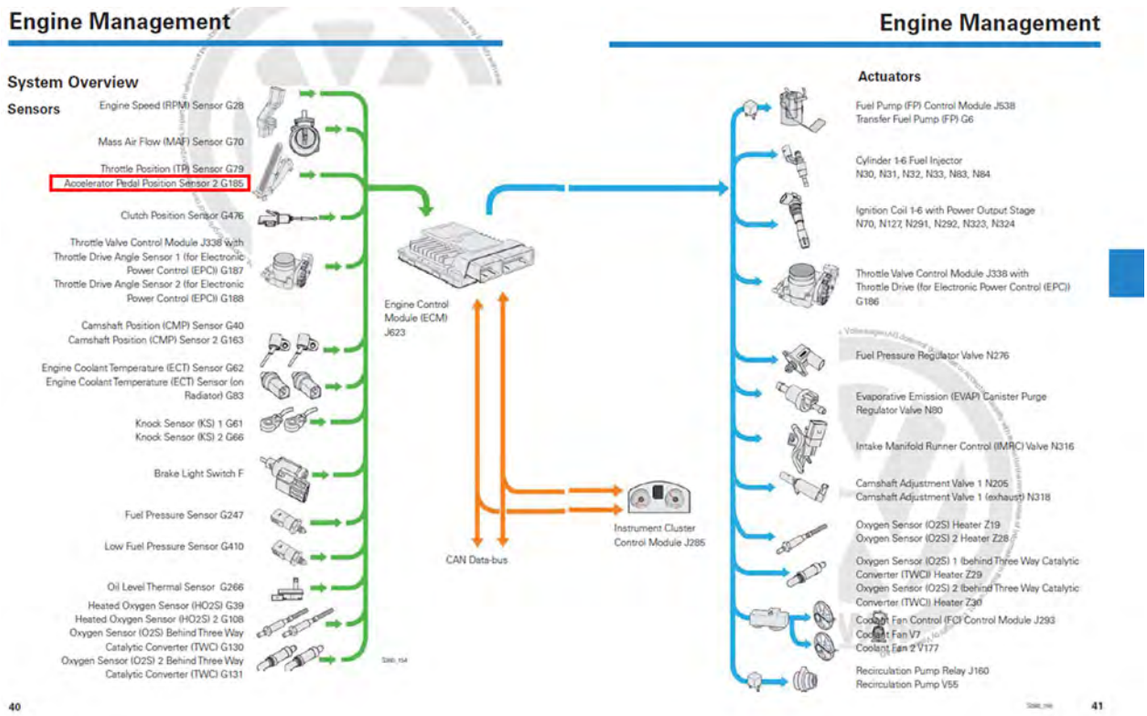

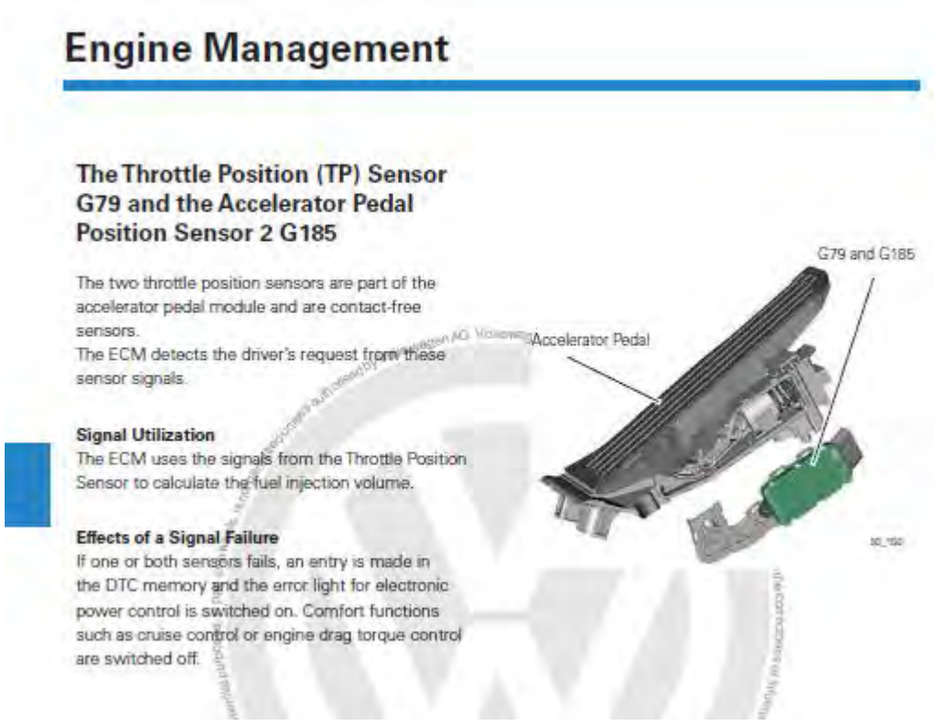

Figure 142

The ’604 patent Accused Instrumentalities comprise an Engine Control Module (ECM; J623), which is an electronic microprocessor comprising an input signal conditioning circuit receiving the engine shutdown signal. The ignition shutdown signal informs the ECM that the throttle should be in a closed position.

Engine Management

The Throttle Drive Angle Sensor 1 G187 and Throttle Drive Angle Sensor 2 G188 in the Throttle Valve Control Unit

These sensors determine the current position of the throttle valve and send this information to the ECM.

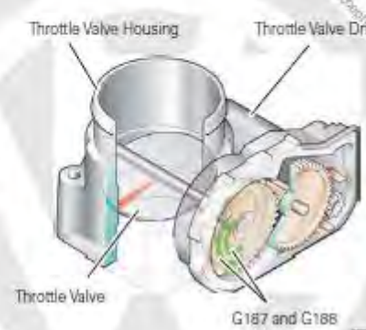

Signal Utilization
The ECM recognizes the position of the throttle valve from the angle sensors signals. The signals from the two sensors are redundant, meaning that both sensors provide the same signal.

Effects of a Signal Failure

Example 1

The ECM receives an implausible signal or no signal at all from an angle sensor:

- An entry is made in the DTC memory and the error light for electric throttle operation is switched on
- Systems which affect torque, (e.g. cruise control system or engine drag torque control), are switched off
- The load signal is used to monitor the remaining angle sensor
- The accelerator pedal responds normally

Example 2

The ECM receives an implausible signal or no signal from both angle sensors:

- An entry is made for both sensors in the DTC memory and the error light for electric throttle operation is switched on
- The throttle valve drive is switched off
- The engine runs only at an increased idle speed of 1,500 RPM and no longer reacts to the accelerator pedal

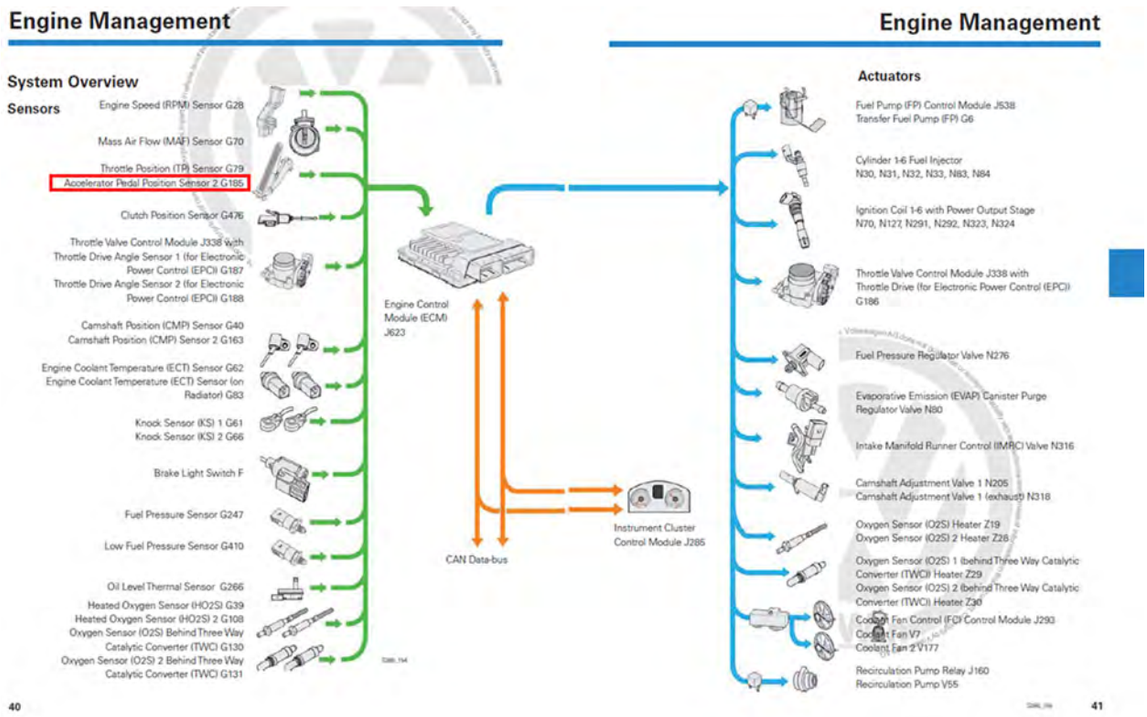

Figure 143

For example, as evidenced by the figures below, the Engine Control Module (ECM; J623) is an electronic microprocessor.

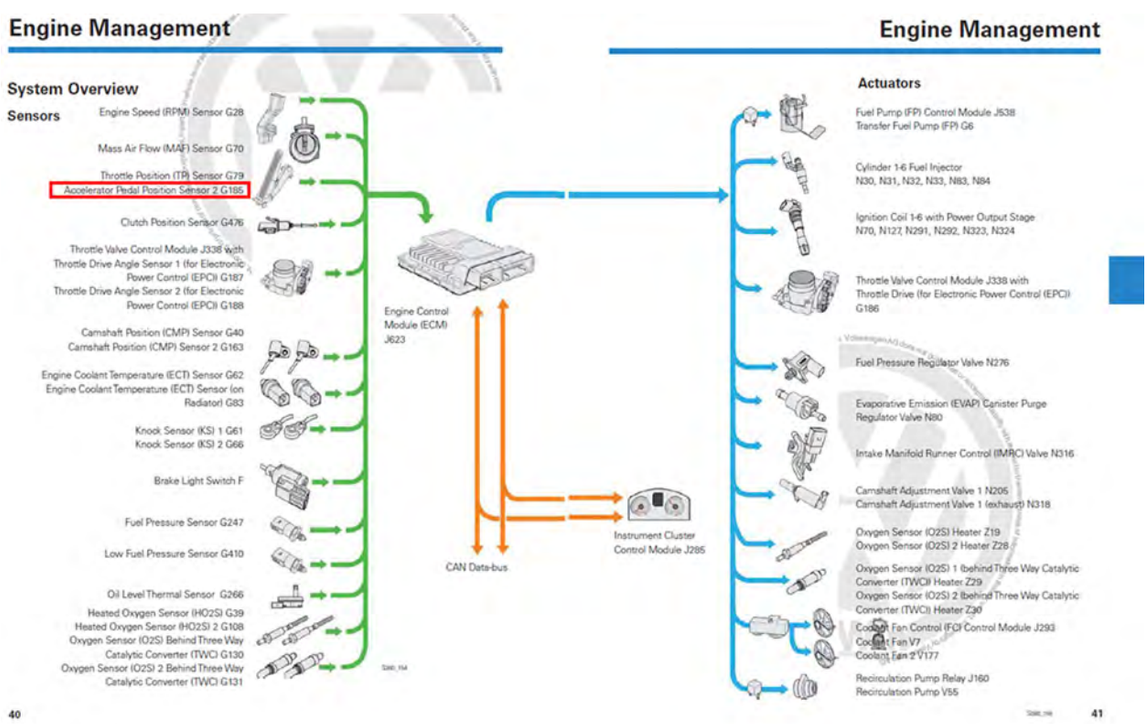

And the ECM includes a means for developing a throttle valve actuator motor control signal responsive to the presence of an engine shutdown.

Engine Management

The Throttle Drive Angle Sensor 1 G187 and Throttle Drive Angle Sensor 2 G188 in the Throttle Valve Control Unit

These sensors determine the current position of the throttle valve and send this information to the ECM.

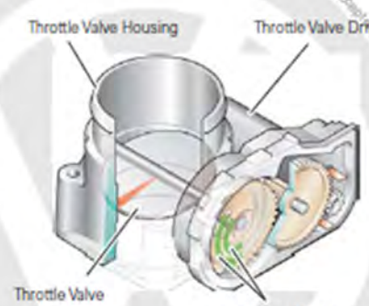

Signal Utilization

The ECM recognizes the position of the throttle valve from the angle sensors signals. The signals from the two sensors are redundant, meaning that both sensors provide the same signal.

Effects of a Signal Failure

Example 1

The ECM receives an implausible signal or no signal at all from an angle sensor:

- An entry is made in the DTC memory and the error light for electric throttle operation is switched on
- Systems which affect torque, (e.g. cruise control system or engine drag torque control), are switched off
- The load signal is used to monitor the remaining angle sensor
- The accelerator pedal responds normally

Example 2

The ECM receives an implausible signal or no signal from both angle sensors:

- An entry is made for both sensors in the DTC memory and the error light for electric throttle operation is switched on
- The throttle valve drive is switched off
- The engine runs only at an increased idle speed of 1,500 RPM and no longer reacts to the accelerator pedal

Whereby the Throttle Drive for Electronic Power Control (EPC) motor adjusts the throttle plate to a throttle plate position between closed (idle) to fully open (wide-open throttle position). As evidenced by DTC P0638 if the engine shutoff time is greater than five seconds there are three checks. The checks are indicative of an engine shutdown signal.

Throttle Drive for Electronic Power Control (EPC) G186

The Throttle Drive for Electronic Power Control is an electrical motor which operates the throttle valve through a gear mechanism.

The range of adjustment is stepless from idle to the wide-open throttle position.

Effects of a Failure
If the throttle drive fails, the throttle valve is automatically pulled to the emergency running position. An entry is made in the DTC memory and the error lamp for electronic power control is switched on.

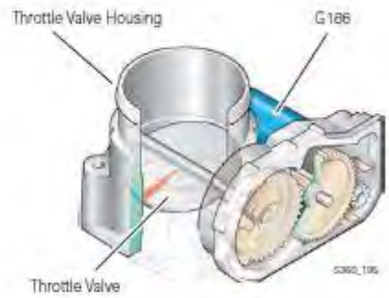

The throttle plate adjustment described above is performed to prevent throttle plate freezing when the engine is shut down.

2013 Volkswagen Passat Sedan (A32) V6-3.6L (CDVB)

Vehicle » A L L Diagnostic Trouble Codes (DTC) » Testing and Inspection » P Code Charts » P0638 » Engine Control Module, 2012 - 2014 MY

ENGINE CONTROL MODULE, 2012 - 2014 MY

Engine Control Module, 2012 - 2014 MY

DTC / Description	Monitor Strategy Description	Malfunction Criteria and Threshold Value	Secondary Parameters with Enable Conditions	Monitoring Time Length	MIL Illumination	Component Diagnostic Procedure
P0638 Throttle Actuator Control Range/Performance Bank 1	Throttle Actuator Control Rationality check close movement	Time to close to reference point > 0.6 s and reference point 2.88%	Engine speed 0 RPM Vehicle speed 0 MPH ECT > 5.0° C IAT @ manifold > 5.0° C CASE 1: Ignition on CASE 2: Engine shut-off-time > 5.0 s number of checks 3.00	5.00 s Multiple	2 DCY	Check the Throttle Valve Control Module (GX3) . Refer to ⇒ [Throttle Valve Control Module (GX3) Checking].
	Signal range check @ mechanical stop low	TPS 1 signal voltage 'NOT 0.40 - 0.80 V OR TPS 2 signal voltage 'NOT 4.20 - 4.60 V	Engine speed 0 RPM Vehicle speed 0 MPH CASE 1: Ignition on ECT 5.0 - 115° C IAT @ manifold 5.0 - 143° C CASE 2: Engine shut-off-time > 5.0 s ECT 5.0 - 115° C IAT @ manifold 5.0 - 143° C	0.30 s Multiple		

Figure 144

Based upon the totality of the foregoing evidence, and based further upon information and belief, the ’604 patent Accused Instrumentalities include “a throttle controller for an internal combustion engine having a throttle body including an adjustable throttle valve in an intake air passage; a throttle valve actuator motor connected to the throttle valve for activating the throttle valve between a closed position and a full-open position; a throttle position sensor connected to the throttle valve for developing a position signal indicating the actual throttle valve position; an ignition switch for initiating engine startup and engine shutdown and for developing an engine shutdown signal; an accelerator pedal and an accelerator position sensor for developing an actual accelerator pedal position signal; and an electronic microprocessor comprising an input signal conditioning circuit receiving the engine shutdown signal, the electronic microprocessor including means for developing a throttle valve actuator motor control signal responsive to the presence of an engine shutdown signal whereby the throttle valve actuator motor adjusts the throttle plate to a throttle plate position between the closed position and the fully open position to prevent throttle plate freezing when the engine is shut down.”

DIRECT INFRINGEMENT, INDIRECT INFRINGEMENT,

DAMAGES AND WILLFUL INFRINGEMENT

151. The allegations set forth in the foregoing paragraphs 1 through 150 are incorporated into this Twenty-First Claim for Relief.

152. Defendants were made aware of the patents-in-suit at least as early as March 4, 2015, when it was provided notice of the patents via letter.

153. Upon information and belief Defendants’ conduct in making, using, selling, offering to sell and/or importing the Accused Instrumentalities directly infringes at least claim 1 of the ’260 patent; claim 1 of the ’128 patent; claim 1 of the ’565 patent; claim 1 of the ’281 patent; claims 1 and 11 of the ’804 patent; claim 1 of the ’680 patent; claim 1 of the ’166 patent; claim 1 of the ’031 patent; claim 1 of the ’287 patent; claims 1 and 17 of the ’761 patent; claims 1-3 and 7 of the ’115 patent; claims 1 and 7 of the ’574 patent; claim 1 of the ’497 patent; claims 1 and 14 of the ’157 patent; claim 1 of the ’122 patent; claim 1 of the ’149 patent; claim 1 of the ’081 patent; claim 1 of the ’482 patent; claims 1, 7, 11, and 14 of the ’540 patent; and claim 1 of the ’604 patent pursuant to 35 U.S.C. § 271(a). Infringement of these representative claims is alleged solely for illustrative pleading purposes. Michigan Motor reserves the right to assert infringement of additional claims of the Patents-in-Suit as this action proceeds.

154. Upon information and belief, since at least the time of receiving this Amended Complaint, Defendants have induced and continue to induce others to infringe at least claim 1 of the ’260 patent; claim 1 of the ’128 patent; claim 1 of the ’565 patent; claim 1 of the ’281 patent; claims 1 and 11 of the ’804 patent; claim 1 of the ’680 patent; claim 1 of the ’166 patent; claim 1 of the ’031 patent; claim 1 of the ’287 patent; claims 1 and 17 of the ’761 patent; claims 1-3 and 7 of the ’115 patent; claims 1 and 7 of the ’574 patent; claim 1 of the ’497 patent; claims 1 and 14 of the ’157 patent; claim 1 of the ’122 patent; claim 1 of the ’149 patent; claim 1 of the ’081 patent; claim 1 of the ’482 patent; claims 1, 7, 11, and 14 of the ’540 patent; and claim 1 of the ’604 patent under 35 U.S.C. § 271(b) by, among other things, and with specific intent or willful blindness, actively aiding and abetting others to infringe, including but not limited to Defendant’s partners and customers, whose use of the Accused Instrumentalities constitutes direct infringement of at least the aforementioned claims. Infringement of these representative claims is alleged solely for illustrative pleading purposes. Michigan Motor reserves the right to assert infringement of additional claims of the Patents-in-Suit as this action proceeds.

155. In particular, Defendants’ actions that aid and abet others such as their partners and customers to infringe include distributing the Accused Instrumentalities and providing materials and/or services related to the Accused Instrumentalities. On information and belief, the Defendants have engaged in such actions with specific intent to cause infringement or with willful blindness to the resulting infringement because Defendants have had actual knowledge of the patents-in-suit and that its acts were inducing infringement of said patents since at least the time of receiving this Amended Complaint.

156. Upon information and belief, each Defendant is liable as a contributory infringer of the Patents-in-Suit under 35 U.S.C. § 271(c) by offering to sell, selling and importing into the United States the Accused Instrumentalities to be especially made or adapted for use in

infringement of the Patents-in-Suit. The Accused Instrumentalities are material components for use in practicing the Patents-in-Suit and are specifically made and are not a staple article of commerce suitable for substantial non-infringing use.

157. On information and belief, since Defendants received notice of the patents, Defendants' infringement has been and continues to be willful.

158. Michigan Motor has been harmed by the Defendants' infringing activities.

JURY DEMAND

Pursuant to Rule 38 of the Federal Rules of Civil Procedure, Plaintiff demands a trial by jury on all issues triable as such.

PRAYER FOR RELIEF

WHEREFORE, Plaintiff demands judgment for itself and against Defendants as follows:

A. An adjudication that Defendants have infringed the '260, '128, '565, '281, '804, '680, '166, '031, '287, '761, '115, '574, '497, '157, 122, '149, '081, '482, '540, and '604 patents;

B. An award of damages to be paid by Defendants adequate to compensate Plaintiff for Defendants' past infringement of the '260, '128, '565, '281, '804, '680, '166, '031, '287, '761, '115, '574, '497, '157, 122, '149, '081, '482, '540, and '604 patents;

C. and any continuing or future infringement through the date such judgment is entered, including interest, costs, expenses and an accounting of all infringing acts including, but not limited to, those acts not presented at trial;

D. A declaration that this case is exceptional under 35 U.S.C. § 285, and an award of Plaintiff's reasonable attorneys' fees; and

E. An award to Plaintiff of such further relief at law or in equity as the Court deems just and proper.

Dated: April 29, 2019

/s/ Eric A. Bean
Eric A. Bean
ebean@jackiergould.com
JACKIER GOULD, P.C.
121 West Long Lake Rd., Suite 200
Bloomfield Hills, MI 48304
Telephone: (248) 433-2577
Facsimile: (248) 642-5241

/s/ Timothy Devlin
Timothy Devlin (DE 4241)
Robyn T. Williams
tdevlin@devlinlawfirm.com
rwilliams@devlinlawfirm.com
DEVLIN LAW FIRM LLC
1306 N. Broom Street, First Floor
Wilmington, DE 19806
Telephone: (302)-449-9010

Attorneys for Plaintiff
MICHIGAN MOTOR TECHNOLOGIES LLC

Patent Trial and Appeal Board

A petition has been filed in Patent Number 6,581,565, Application Number 10/191,641 on 01/31/2020.

The AIA Review Number is IPR2020-00445.

To view the documents filed in this petition, go to https://ptab.uspto.gov and Search for the AIA Review Number.

- Enter your search criteria on the "Search PTAB" page
- Type in the AIA Review Number or Patent Number
- You will need to answer the CAPTCHA to prove that you are not a robot.
- Click on the "Search" button
- The search results will appear identifying the AIA Review Number
- Click on the "View Documents" button
- A pop up window will appear with a list of documents
- Click on the "Download" button to download the document.

Questions regarding this notice should be directed to the Patent Trial and Appeal Board at 571-272-7822.

Patent Trial and Appeal Board

A petition has been filed in Patent Number 6,581,565, Application Number 10/191,641 on 01/31/2020.

The AIA Review Number is IPR2020-00444.

To view the documents filed in this petition, go to https://ptab.uspto.gov and Search for the AIA Review Number.

- Enter your search criteria on the "Search PTAB" page
- Type in the AIA Review Number or Patent Number
- You will need to answer the CAPTCHA to prove that you are not a robot.
- Click on the "Search" button
- The search results will appear identifying the AIA Review Number
- Click on the "View Documents" button
- A pop up window will appear with a list of documents
- Click on the "Download" button to download the document.

Questions regarding this notice should be directed to the Patent Trial and Appeal Board at 571-272-7822.

Electronic Acknowledgement Receipt

EFS ID:	38496608
Application Number:	10191641
International Application Number:	
Confirmation Number:	4815
Title of Invention:	ENGINE TORQUE CONTROLLER
First Named Inventor/Applicant Name:	Garon Nigel Heslop
Customer Number:	24939
Filer:	Timothy Devlin/Pat Mathews
Filer Authorized By:	Timothy Devlin
Attorney Docket Number:	10541-1524
Receipt Date:	05-FEB-2020
Filing Date:	09-JUL-2002
Time Stamp:	10:47:22
Application Type:	Utility under 35 USC 111(a)

Payment information:

Submitted with Payment	no

File Listing:

Document Number	Document Description	File Name	File Size(Bytes)/ Message Digest	Multi Part /.zip	Pages (if appl.)
1		2020-02-05-USPN6581565-MMT-Transmittal-POA-as-filed.pdf	316425 9e1e22f7196a7d37b92d6667bd3cb9b0e0f099bd	yes	2

	Multipart Description/PDF files in .zip description		
	Document Description	**Start**	**End**
	Transmittal Letter	1	1
	Power of Attorney	2	2
Warnings:			
Information:			

2	Assignee showing of ownership per 37 CFR 3.73	2020-02-05-USPN6581565-MMT-373c-Statement-as-filed.pdf	124048 d29e6571a6d3748bc6a883a846805795a7ffeab9	no	3
Warnings:					
Information:					
		Total Files Size (in bytes):	440473		

This Acknowledgement Receipt evidences receipt on the noted date by the USPTO of the indicated documents, characterized by the applicant, and including page counts, where applicable. It serves as evidence of receipt similar to a Post Card, as described in MPEP 503.

<u>New Applications Under 35 U.S.C. 111</u>
If a new application is being filed and the application includes the necessary components for a filing date (see 37 CFR 1.53(b)-(d) and MPEP 506), a Filing Receipt (37 CFR 1.54) will be issued in due course and the date shown on this Acknowledgement Receipt will establish the filing date of the application.
<u>National Stage of an International Application under 35 U.S.C. 371</u>
If a timely submission to enter the national stage of an international application is compliant with the conditions of 35 U.S.C. 371 and other applicable requirements a Form PCT/DO/EO/903 indicating acceptance of the application as a national stage submission under 35 U.S.C. 371 will be issued in addition to the Filing Receipt, in due course.
<u>New International Application Filed with the USPTO as a Receiving Office</u>
If a new international application is being filed and the international application includes the necessary components for an international filing date (see PCT Article 11 and MPEP 1810), a Notification of the International Application Number and of the International Filing Date (Form PCT/RO/105) will be issued in due course, subject to prescriptions concerning national security, and the date shown on this Acknowledgement Receipt will establish the international filing date of the application.

Doc Code: PA..
Document Description: Power of Attorney

PTO/AIA/82A (07-13)
Approved for use through 01/31/2018. OMB 0651-0035
U.S. Patent and Trademark Office; U.S. DEPARTMENT OF COMMERCE
Under the Paperwork Reduction Act of 1995, no persons are required to respond to a collection of information unless it displays a valid OMB control number.

TRANSMITTAL FOR POWER OF ATTORNEY TO ONE OR MORE REGISTERED PRACTITIONERS

NOTE: This form is to be submitted with the Power of Attorney by Applicant form (PTO/AIA/82B) to identify the application to which the Power of Attorney is directed, in accordance with 37 CFR 1.5, unless the application number and filing date are identified in the Power of Attorney by Applicant form. If neither form PTO/AIA/82A nor form PTO/AIA82B identifies the application to which the Power of Attorney is directed, the Power of Attorney will not be recognized in the application.

Application Number	10/191,641
Filing Date	July 9, 2002
First Named Inventor	Garon Nigel Heslop
Title	ENGINE TORQUE CONTROLLER
Art Unit	3747
Examiner Name	Argenbright, Tony Michael
Attorney Docket Number	

SIGNATURE of Applicant or Patent Practitioner

Signature	/Timothy Devlin/	Date (Optional)	2020-02-05
Name	Timothy Devlin	Registration Number	41706
Title (if Applicant is a juristic entity)	Attorney for Applicant		
Applicant Name (if Applicant is a juristic entity)	Michigan Motor Technologies LLC		

NOTE: This form must be signed in accordance with 37 CFR 1.33. See 37 CFR 1.4(d) for signature requirements and certifications. If more than one applicant, use multiple forms.

☑ *Total of 1 forms are submitted.

This collection of information is required by 37 CFR 1.131, 1.32, and 1.33. The information is required to obtain or retain a benefit by the public which is to file (and by the USPTO to process) an application. Confidentiality is governed by 35 U.S.C. 122 and 37 CFR 1.11 and 1.14. This collection is estimated to take 3 minutes to complete, including gathering, preparing, and submitting the completed application form to the USPTO. Time will vary depending upon the individual case. Any comments on the amount of time you require to complete this form and/or suggestions for reducing this burden, should be sent to the Chief Information Officer, U.S. Patent and Trademark Office, U.S. Department of Commerce, P.O. Box 1450, Alexandria, VA 22313-1450. DO NOT SEND FEES OR COMPLETED FORMS TO THIS ADDRESS. **SEND TO: Commissioner for Patents, P.O. Box 1450, Alexandria, VA 22313-1450.**

If you need assistance in completing the form, call 1-800-PTO-9199 and select option 2.

PTO/AIA/80 (07-17)
Approved for use through 01/31/2018. OMB 0651-0035
U.S. Patent and Trademark Office; U.S. DEPARTMENT OF COMMERCE
Under the Paperwork Reduction Act of 1995, no person is required to respond to a collection of information unless it displays a valid OMB control number

POWER OF ATTORNEY TO PROSECUTE APPLICATIONS BEFORE THE USPTO

I hereby revoke all previous powers of attorney given in the application identified in the attached statement under 37 CFR 3.73(c).

I hereby appoint:

☑ Practitioners associated with Customer Number: 163393

OR

☐ Practitioner(s) named below (if more than ten patent practitioners are to be named, then a customer number must be used):

Name	Registration Number	Name	Registration Number

As attorney(s) or agent(s) to represent the undersigned before the United States Patent and Trademark Office (USPTO) in connection with any and all patent applications assigned only to the undersigned according to the USPTO assignment records or assignment documents attached to this form in accordance with 37 CFR 3.73(c).

Please change the correspondence address for the application identified in the attached statement under 37 CFR 3.73(c) to:

☑ The address associated with Customer Number: 163393

OR

☐

Firm or individual name		
Address		
City	State	Zip
Country		
Telephone	Email	

Assignee name and address: MICHIGAN MOTOR TECHNOLOGIES LLC
2360 ORCHARD LAKE ROAD, SUITE 100
SYLVAN LAKE, MICHIGAN 48320

A copy of this form, together with a statement under 37 CFR 3.73(c) (Form PTO/AIA/96 or equivalent) is required to be filed in each application in which this form is used. The statement under 37 CFR 3.73(c) may be completed by one of the practitioners appointed in this form, and must identify the application in which this Power of Attorney is to be filed.

SIGNATURE of Assignee of Record

The individual whose signature and title is supplied below is authorized to act on behalf of the assignee.

Signature KCBrady	Date 8/5/2019
Name Kevin Brady	Telephone 215 298 3164
Title Managing Member	

This collection of information is required by 37 CFR 1.31, 1.32, and 1.33. The information is required to obtain or retain a benefit by the public, which is to update (and by the USPTO to process) the file of a patent or reexamination proceeding. Confidentiality is governed by 35 U.S.C. 122 and 37 CFR 1.11 and 1.14. This collection is estimated to take 18 minutes to complete, including gathering, preparing, and submitting the completed application form to the USPTO. Time will vary depending upon the individual case. Any comments on the amount of time you require to complete this form and/or suggestions for reducing this burden, should be sent to the Chief Information Officer, U.S. Patent and Trademark Office, U.S. Department of Commerce, P.O. Box 1450, Alexandria, VA 22313-1450. DO NOT SEND FEES OR COMPLETED FORMS TO THIS ADDRESS. **SEND TO: Commissioner for Patents, P.O. Box 1450, Alexandria, VA 22313-1450.**
If you need assistance in completing the form, call 1-800-PTO-9199 and select option 2.

PTO/AIA/96 (08-12)
Approved for use through 01/31/2013. OMB 0651-0031
U.S. Patent and Trademark Office; U.S. DEPARTMENT OF COMMERCE
Under the Paperwork Reduction Act of 1995, no persons are required to respond to a collection of information unless it displays a valid OMB control number.

STATEMENT UNDER 37 CFR 3.73(c)

Applicant/Patent Owner: Michigan Motor Technologies LLC

Application No./Patent No.: Patent No.: 6,581,565 Filed/Issue Date: Issued: June 24, 2003

Titled: ENGINE TORQUE CONTROLLER

Michigan Motor Technologies LLC, a limited liability company

(Name of Assignee) (Type of Assignee, e.g., corporation, partnership, university, government agency, etc.)

states that, for the patent application/patent identified above, it is (choose **one** of options 1, 2, 3 or 4 below):

1. ☑ The assignee of the entire right, title, and interest.

2. ☐ An assignee of less than the entire right, title, and interest (check applicable box):

☐ The extent (by percentage) of its ownership interest is _____%. Additional Statement(s) by the owners holding the balance of the interest must be submitted to account for 100% of the ownership interest.

☐ There are unspecified percentages of ownership. The other parties, including inventors, who together own the entire right, title and interest are:

Additional Statement(s) by the owner(s) holding the balance of the interest must be submitted to account for the entire right, title, and interest.

3. ☐ The assignee of an undivided interest in the entirety (a complete assignment from one of the joint inventors was made). The other parties, including inventors, who together own the entire right, title, and interest are:

Additional Statement(s) by the owner(s) holding the balance of the interest must be submitted to account for the entire right, title, and interest.

4. ☐ The recipient, via a court proceeding or the like (*e.g.*, bankruptcy, probate), of an undivided interest in the entirety (a complete transfer of ownership interest was made). The certified document(s) showing the transfer is attached.

The interest identified in option 1, 2 or 3 above (not option 4) is evidenced by either (choose **one** of options A or B below):

A. ☐ An assignment from the inventor(s) of the patent application/patent identified above. The assignment was recorded in the United States Patent and Trademark Office at Reel _____, Frame _____, or for which a copy thereof is attached.

B. ☑ A chain of title from the inventor(s), of the patent application/patent identified above, to the current assignee as follows:

1. From: Garon Nigel Heslop, Jon Dixon, Richard Stephen Blachford To: Visteon Global Technologies, Inc.

The document was recorded in the United States Patent and Trademark Office at Reel 013091, Frame 0632, or for which a copy thereof is attached.

2. From: Visteon Global Technologies, Inc. To: Godo Kaisha IP Bridge 1

The document was recorded in the United States Patent and Trademark Office at Reel 035421, Frame 0739, or for which a copy thereof is attached.

This collection of information is required by 37 CFR 3.73(b). The information is required to obtain or retain a benefit by the public which is to file (and by the USPTO to process) an application. Confidentiality is governed by 35 U.S.C. 122 and 37 CFR 1.11 and 1.14. This collection is estimated to take 12 minutes to complete, including gathering, preparing, and submitting the completed application form to the USPTO. Time will vary depending upon the individual case. Any comments on the amount of time you require to complete this form and/or suggestions for reducing this burden, should be sent to the Chief Information Officer, U.S. Patent and Trademark Office, U.S. Department of Commerce, P.O. Box 1450, Alexandria, VA 22313-1450. DO NOT SEND FEES OR COMPLETED FORMS TO THIS ADDRESS. **SEND TO: Commissioner for Patents, P.O. Box 1450, Alexandria, VA 22313-1450**.

If you need assistance in completing the form, call 1-800-PTO-9199 and select option 2.

PTO/AIA/96 (08-12)
Approved for use through 01/31/2013. OMB 0651-0031
U.S. Patent and Trademark Office; U.S. DEPARTMENT OF COMMERCE
Under the Paperwork Reduction Act of 1995, no persons are required to respond to a collection of information unless it displays a valid OMB control number.

STATEMENT UNDER 37 CFR 3.73(c)

3. From: Godo Kaisha IP Bridge To: Mobile Automotive Technologies, LLC

The document was recorded in the United States Patent and Trademark Office at
Reel 043463, Frame 0223, or for which a copy thereof is attached.

4. From: Godo Kaisha IP Bridge To: Mobile Automotive Technologies, LLC

The document was recorded in the United States Patent and Trademark Office at
Reel 043843, Frame 0821, or for which a copy thereof is attached.

5. From: Mobile Automotive Technologies, LLC To: Michigan Motor Technologies LLC

The document was recorded in the United States Patent and Trademark Office at
Reel 043463, Frame 0881, or for which a copy thereof is attached.

6. From: _____ To: _____

The document was recorded in the United States Patent and Trademark Office at
Reel _____, Frame _____, or for which a copy thereof is attached.

☐ Additional documents in the chain of title are listed on a supplemental sheet(s).

☑ As required by 37 CFR 3.73(c)(1)(i), the documentary evidence of the chain of title from the original owner to the assignee was, or concurrently is being, submitted for recordation pursuant to 37 CFR 3.11.

[NOTE: A separate copy (i.e., a true copy of the original assignment document(s)) must be submitted to Assignment Division in accordance with 37 CFR Part 3, to record the assignment in the records of the USPTO. See MPEP 302.08]

The undersigned (whose title is supplied below) is authorized to act on behalf of the assignee.

/Timothy Devlin/	2020-02-05
Signature	Date
Timothy Devlin	Reg. No. 41706
Printed or Typed Name	Title or Registration Number

Privacy Act Statement

The **Privacy Act of 1974 (P.L. 93-579)** requires that you be given certain information in connection with your submission of the attached form related to a patent application or patent. Accordingly, pursuant to the requirements of the Act, please be advised that: (1) the general authority for the collection of this information is 35 U.S.C. 2(b)(2); (2) furnishing of the information solicited is voluntary; and (3) the principal purpose for which the information is used by the U.S. Patent and Trademark Office is to process and/or examine your submission related to a patent application or patent. If you do not furnish the requested information, the U.S. Patent and Trademark Office may not be able to process and/or examine your submission, which may result in termination of proceedings or abandonment of the application or expiration of the patent.

The information provided by you in this form will be subject to the following routine uses:

1. The information on this form will be treated confidentially to the extent allowed under the Freedom of Information Act (5 U.S.C. 552) and the Privacy Act (5 U.S.C 552a). Records from this system of records may be disclosed to the Department of Justice to determine whether disclosure of these records is required by the Freedom of Information Act.
2. A record from this system of records may be disclosed, as a routine use, in the course of presenting evidence to a court, magistrate, or administrative tribunal, including disclosures to opposing counsel in the course of settlement negotiations.
3. A record in this system of records may be disclosed, as a routine use, to a Member of Congress submitting a request involving an individual, to whom the record pertains, when the individual has requested assistance from the Member with respect to the subject matter of the record.
4. A record in this system of records may be disclosed, as a routine use, to a contractor of the Agency having need for the information in order to perform a contract. Recipients of information shall be required to comply with the requirements of the Privacy Act of 1974, as amended, pursuant to 5 U.S.C. 552a(m).
5. A record related to an International Application filed under the Patent Cooperation Treaty in this system of records may be disclosed, as a routine use, to the International Bureau of the World Intellectual Property Organization, pursuant to the Patent Cooperation Treaty.
6. A record in this system of records may be disclosed, as a routine use, to another federal agency for purposes of National Security review (35 U.S.C. 181) and for review pursuant to the Atomic Energy Act (42 U.S.C. 218(c)).
7. A record from this system of records may be disclosed, as a routine use, to the Administrator, General Services, or his/her designee, during an inspection of records conducted by GSA as part of that agency's responsibility to recommend improvements in records management practices and programs, under authority of 44 U.S.C. 2904 and 2906. Such disclosure shall be made in accordance with the GSA regulations governing inspection of records for this purpose, and any other relevant (*i.e.*, GSA or Commerce) directive. Such disclosure shall not be used to make determinations about individuals.
8. A record from this system of records may be disclosed, as a routine use, to the public after either publication of the application pursuant to 35 U.S.C. 122(b) or issuance of a patent pursuant to 35 U.S.C. 151. Further, a record may be disclosed, subject to the limitations of 37 CFR 1.14, as a routine use, to the public if the record was filed in an application which became abandoned or in which the proceedings were terminated and which application is referenced by either a published application, an application open to public inspection or an issued patent.
9. A record from this system of records may be disclosed, as a routine use, to a Federal, State, or local law enforcement agency, if the USPTO becomes aware of a violation or potential violation of law or regulation.

Trials@uspto.gov
571-272-7822

Paper No. 4

UNITED STATES PATENT AND TRADEMARK OFFICE

BEFORE THE PATENT TRIAL AND APPEAL BOARD

VOLKSWAGEN GROUP OF AMERICA, INC.,
Petitioner,

v.

MICHIGAN MOTOR TECHNOLOGIES, LLC,
Patent Owner.

Case IPR2020-00444
Patent 6,581,565

Mailed: February 7, 2020

Before STEVEN M. AMITRANI, *Trial Paralegal*

NOTICE OF FILING DATE ACCORDED TO PETITION
AND
TIME FOR FILING PATENT OWNER PRELIMINARY RESPONSE

The petition for *inter partes* review in the above proceeding has been accorded the filing date of January 31, 2020.

Patent Owner may file a preliminary response to the petition no later than three months from the date of this notice. The preliminary response is limited to setting forth the reasons why the requested review should not be instituted. Patent Owner may also file an election to waive the preliminary response to expedite the proceeding. For more information, please consult the Office Patent Trial Practice Guide, 77 Fed. Reg. 48756 (Aug. 14, 2012), which is available on the Board Web site at http://www.uspto.gov/PTAB.

Patent Owner is advised of the requirement to submit mandatory notice information under 37 C.F.R. § 42.8(a)(2) within 21 days of service of the petition.

The parties are encouraged to use the heading on the first page of this Notice for all future filings in the proceeding.

The parties are advised that under 37 C.F.R. § 42.10(c), recognition of counsel *pro hac vice* requires a showing of good cause. The parties are authorized to file motions for *pro hac vice* admission under 37 C.F.R. § 42.10(c). Such motions shall be filed in accordance with the "Order -- Authorizing Motion *for Pro Hac Vice* Admission" in Case IPR2013-00639, Paper 7, a copy of which is available on the Board Web site under "Representative Orders, Decisions, and Notices."

The parties are reminded that unless otherwise permitted by 37 C.F.R. § 42.6(b)(2), all filings in this proceeding must be made electronically in Patent Trial and Appeal Board End to End (PTAB E2E), accessible from the Board Web site at http://www.uspto.gov/PTAB. To file documents, users must register with PTAB E2E. Information regarding how to register with and use PTAB E2E is available at the Board Web site.

If there are any questions pertaining to this notice, please contact Steven Amitrani at 469-295-9294 or the Patent Trial and Appeal Board at 571-272-7822.

PETITIONER:

Michael D. Specht
Jason A. Fitzsimmons
Daniel E. Yonan
Kyle E. Conklin
John Higgins
STERNE, KESSLER, GOLDSTEIN & FOX P.L.L.C.
mspecht-ptab@sternekessler.com
jfitzsimmons-ptab@sternekessler.com
dyonan-ptab@sternekessler.com
kconklin-ptab@sternekessler.com
jhiggins-ptab@sternekessler.com

PATENT OWNER:

VISTEON GLOBAL TECHNOLOGIES, INC.
Intellectual Property Department
One Village Center Drive
Van Buren Township, MI 48111

NOTICE CONCERNING ALTERNATIVE DISPUTE RESOLUTION (ADR)

The Patent Trial and Appeal Board (PTAB) strongly encourages parties who are considering settlement to consider alternative dispute resolution as a means of settling the issues that may be raised in an AIA trial proceeding. Many AIA trials are settled prior to a Final Written Decision. Those considering settlement may wish to consider alternative dispute resolution techniques early in a proceeding to produce a quicker, mutually agreeable resolution of a dispute or to at least narrow the scope of matters in dispute. Alternative dispute resolution has the potential to save parties time and money.

Many non-profit organizations, both inside and outside the intellectual property field, offer alternative dispute resolution services. Listed below are the names and addresses of several such organizations. The listings are provided for the convenience of parties involved in cases before the PTAB; the PTAB does not sponsor or endorse any particular organization's alternative dispute resolution services. In addition, consideration may be given to utilizing independent alternative dispute resolution firms. Such firms may be located through a standard keyword Internet search.

CPR INSTITUTE FOR DISPUTE RESOLUTION	AMERICAN INTELLECTUAL PROPERTY LAW ASSOCIATION (AIPLA)	AMERICAN ARBITRATION ASSOCIATION (AAA)	WORLD INTELLECTUAL PROPERTY ORGANIZATION (WIPO)	AMERICAN BAR ASSOCIATION (ABA)
Telephone: (212) 949-6490	Telephone: (703) 415-0780	Telephone: (212) 484-3266	Telephone: 41 22 338 9111	Telephone : (202) 662-1000
Fax: (212) 949-8859	Fax: (703) 415-0786	Fax: (212) 307-4387	Fax: 41 22 733 5428	N/A
575 Lexington Ave	241 18th Street, South, Suite 700	140 West 51st Street	34, chemin des Colombettes	1050 Connecticut Ave, NW
New York, NY 10022	Arlington, VA 22202	New York, NY 10020	CH-1211 Geneva 20, Switzerland	Washington D.C. 20036
www.cpradr.org	www.aipla.org	www.adr.org	www.wipo.int	www.americanbar.org

If parties to an AIA trial proceeding consider using alternative dispute resolution, the PTAB would like to know whether the parties ultimately decided to engage in alternative dispute resolution and the reasons why or why not. If the parties actually engage in alternative dispute resolution, the PTAB would be interested to learn what mechanism (e.g., arbitration, mediation, etc.) was used and the general result. Such a statement from the

parties is not required but would be helpful to the PTAB in assessing the value of alternative dispute resolution to parties involved in AIA trial proceedings. To report an experience with ADR, please forward a summary of the particulars to the following email address: PTAB_ADR_Comments@uspto.gov

Trials@uspto.gov
571-272-7822

Paper No. 4

UNITED STATES PATENT AND TRADEMARK OFFICE

BEFORE THE PATENT TRIAL AND APPEAL BOARD

VOLKSWAGEN GROUP OF AMERICA, INC.,
Petitioner,

v.

MICHIGAN MOTOR TECHNOLOGIES, LLC,
Patent Owner.

Case IPR2020-00445
Patent 6,581,565

Mailed: February 7, 2020

Before STEVEN M. AMITRANI, *Trial Paralegal*

NOTICE OF FILING DATE ACCORDED TO PETITION
AND
TIME FOR FILING PATENT OWNER PRELIMINARY RESPONSE

The petition for *inter partes* review in the above proceeding has been accorded the filing date of January 31, 2020.

Patent Owner may file a preliminary response to the petition no later than three months from the date of this notice. The preliminary response is limited to setting forth the reasons why the requested review should not be instituted. Patent Owner may also file an election to waive the preliminary response to expedite the proceeding. For more information, please consult the Office Patent Trial Practice Guide, 77 Fed. Reg. 48756 (Aug. 14, 2012), which is available on the Board Web site at http://www.uspto.gov/PTAB.

Patent Owner is advised of the requirement to submit mandatory notice information under 37 C.F.R. § 42.8(a)(2) within 21 days of service of the petition.

The parties are encouraged to use the heading on the first page of this Notice for all future filings in the proceeding.

The parties are advised that under 37 C.F.R. § 42.10(c), recognition of counsel *pro hac vice* requires a showing of good cause. The parties are authorized to file motions for *pro hac vice* admission under 37 C.F.R. § 42.10(c). Such motions shall be filed in accordance with the "Order -- Authorizing Motion *for Pro Hac Vice* Admission" in Case IPR2013-00639, Paper 7, a copy of which is available on the Board Web site under "Representative Orders, Decisions, and Notices."

The parties are reminded that unless otherwise permitted by 37 C.F.R. § 42.6(b)(2), all filings in this proceeding must be made electronically in Patent Trial and Appeal Board End to End (PTAB E2E), accessible from the Board Web site at http://www.uspto.gov/PTAB. To file documents, users must register with PTAB E2E. Information regarding how to register with and use PTAB E2E is available at the Board Web site.

If there are any questions pertaining to this notice, please contact Steven Amitrani at 469-295-9294 or the Patent Trial and Appeal Board at 571-272-7822.

PETITIONER:

Michael D. Specht
Jason A. Fitzsimmons
Daniel E. Yonan
Kyle E. Conklin
John Higgins
STERNE, KESSLER, GOLDSTEIN & FOX P.L.L.C.
mspecht-ptab@sternekessler.com
jfitzsimmons-ptab@sternekessler.com
dyonan-ptab@sternekessler.com
kconklin-ptab@sternekessler.com
jhiggins-ptab@sternekessler.com

PATENT OWNER:

VISTEON GLOBAL TECHNOLOGIES, INC.
Intellectual Property Department
One Village Center Drive
Van Buren Township, MI 48111

NOTICE CONCERNING ALTERNATIVE DISPUTE RESOLUTION (ADR)

The Patent Trial and Appeal Board (PTAB) strongly encourages parties who are considering settlement to consider alternative dispute resolution as a means of settling the issues that may be raised in an AIA trial proceeding. Many AIA trials are settled prior to a Final Written Decision. Those considering settlement may wish to consider alternative dispute resolution techniques early in a proceeding to produce a quicker, mutually agreeable resolution of a dispute or to at least narrow the scope of matters in dispute. Alternative dispute resolution has the potential to save parties time and money.

Many non-profit organizations, both inside and outside the intellectual property field, offer alternative dispute resolution services. Listed below are the names and addresses of several such organizations. The listings are provided for the convenience of parties involved in cases before the PTAB; the PTAB does not sponsor or endorse any particular organization's alternative dispute resolution services. In addition, consideration may be given to utilizing independent alternative dispute resolution firms. Such firms may be located through a standard keyword Internet search.

CPR INSTITUTE FOR DISPUTE RESOLUTION	AMERICAN INTELLECTUAL PROPERTY LAW ASSOCIATION (AIPLA)	AMERICAN ARBITRATION ASSOCIATION (AAA)	WORLD INTELLECTUAL PROPERTY ORGANIZATION (WIPO)	AMERICAN BAR ASSOCIATION (ABA)
Telephone: (212) 949-6490	Telephone: (703) 415-0780	Telephone: (212) 484-3266	Telephone: 41 22 338 9111	Telephone : (202) 662-1000
Fax: (212) 949-8859	Fax: (703) 415-0786	Fax: (212) 307-4387	Fax: 41 22 733 5428	N/A
575 Lexington Ave	241 18th Street, South, Suite 700	140 West 51st Street	34, chemin des Colombettes	1050 Connecticut Ave, NW
New York, NY 10022	Arlington, VA 22202	New York, NY 10020	CH-1211 Geneva 20, Switzerland	Washington D.C. 20036
www.cpradr.org	www.aipla.org	www.adr.org	www.wipo.int	www.americanbar.org

If parties to an AIA trial proceeding consider using alternative dispute resolution, the PTAB would like to know whether the parties ultimately decided to engage in alternative dispute resolution and the reasons why or why not. If the parties actually engage in alternative dispute resolution, the PTAB would be interested to learn what mechanism (e.g., arbitration, mediation, etc.) was used and the general result. Such a statement from the

parties is not required but would be helpful to the PTAB in assessing the value of alternative dispute resolution to parties involved in AIA trial proceedings. To report an experience with ADR, please forward a summary of the particulars to the following email address: PTAB_ADR_Comments@uspto.gov

File History Content Report

The following content is missing from the original file history record obtained from the United States Patent and Trademark Office. No additional information is available.

Document Date - 2020-02-11

Document Title - USPTO Communication Re: Change of Address

This page is not part of the offi12cial USPTO record. It has been determined that content identified on this document is missing from the original file history record.

UNITED STATES PATENT AND TRADEMARK OFFICE

UNITED STATES DEPARTMENT OF COMMERCE
United States Patent and Trademark Office
Address: COMMISSIONER FOR PATENTS
P.O. Box 1450
Alexandria, Virginia 22313-1450
www.uspto.gov

APPLICATION NUMBER	FILING OR 371(C) DATE	FIRST NAMED APPLICANT	ATTY. DOCKET NO./TITLE
10/191,641	07/09/2002	Garon Nigel Heslop	

CONFIRMATION NO. 4815

POA ACCEPTANCE LETTER

163393
Michigan Motor Tech
c/o Devlin Law Firm LLC
1526 Gilpin Ave.
Wilmington, DE 19806

OC000000114652245

Date Mailed: 02/12/2020

NOTICE OF ACCEPTANCE OF POWER OF ATTORNEY

This is in response to the Power of Attorney filed 02/05/2020.

The Power of Attorney in this application is accepted. Correspondence in this application will be mailed to the above address as provided by 37 CFR 1.33.

Questions about the contents of this notice and the requirements it sets forth should be directed to the Office of Data Management, Application Assistance Unit, at **(571) 272-4000** or **(571) 272-4200** or **1-888-786-0101**.

/nrhayden/

PETITIONER'S EXHIBIT 1002
US PATENT NO. 6,581,565

UNITED STATES PATENT AND TRADEMARK OFFICE

UNITED STATES DEPARTMENT OF COMMERCE
United States Patent and Trademark Office
Address: COMMISSIONER FOR PATENTS
P.O. Box 1450
Alexandria, Virginia 22313-1450
www.uspto.gov

APPLICATION NUMBER	FILING OR 371(C) DATE	FIRST NAMED APPLICANT	ATTY. DOCKET NO./TITLE
10/191,641	07/09/2002	Garon Nigel Heslop	10541-1524

CONFIRMATION NO. 4815

POWER OF ATTORNEY NOTICE

24939
VISTEON GLOBAL TECHNOLOGIES INC
Intellectual Property Department
One Village Center Drive
Van Buren Township, MI 48111

OC000000114652142

Date Mailed: 02/12/2020

NOTICE REGARDING CHANGE OF POWER OF ATTORNEY

This is in response to the Power of Attorney filed 02/05/2020.

- The Power of Attorney to you in this application has been revoked by the assignee who has intervened as provided by 37 CFR 3.71. Future correspondence will be mailed to the new address of record(37 CFR 1.33).

Questions about the contents of this notice and the requirements it sets forth should be directed to the Office of Data Management, Application Assistance Unit, at **(571) 272-4000** or **(571) 272-4200** or **1-888-786-0101**.

/nrhayden/

PETITIONER'S EXHIBIT 1002
US PATENT NO. 6,581,565

UNITED STATES PATENT AND TRADEMARK OFFICE

BEFORE THE PATENT TRIAL AND APPEAL BOARD

VOLKSWAGEN GROUP OF AMERICA, INC.,
Petitioner,

v.

MICHIGAN MOTOR TECHNOLOGIES LLC,
Patent Owner

IPR2020-00444
Patent 6,581,565

PATENT OWNER'S MANDATORY NOTICES

Mail Stop PATENT BOARD
Patent Trial and Appeal Board
US Patent and Trademark Office
P.O. Box 1450
Alexandria, VA 22313-1450

Through the undersigned Counsel, Patent Owner, Michigan Motor Technologies LLC, is submitting the following Mandatory Notice pursuant to 37 C.F.R. § 42.9(a)(2).

REAL PARTY-IN-INTEREST

Michigan Motor Technologies LLC certifies that it is the real party-in-interest as it is the owner of the Patent No. 6,581,565.

RELATED MATTERS:

The Patent Owner identifies the following judicial and/or administrative matters that may affect, or may be affected by, a decision in the *Inter Partes* Review:

Michigan Motor Technologies LLC v. Volkswagen AG, Case No. 2:19-cv-10485 (E.D. Mich.), filed February 18, 2019; *Michigan Motor Technologies LLC v. Volkswagen AG*, Case No. 2:19-cv-10485 (E.D. Mich.), amended Complaint filed January 6, 2020.

LEAD AND BACKUP COUNSEL:

Pursuant to 37 C.F.R. §§ 42.8(b)(3) and 42.01(a), Michigan Motor Technologies LLC designates the following:

Lead Counsel:
Timothy Devlin, Reg. No. 41706
Devlin Law Firm LLC
1526 Gilpin Ave.
Wilmington, DE 19806
Phone: (302) 449-9010
Fax: (302) 353-4251
tdevlin@devlinlawfirm.com

Backup Counsel:
Robyn T. Williams (*pro hac vice* to be submitted)
Devlin Law Firm LLC
1526 Gilpin Ave.
Wilmington, DE 19806
Phone: (302) 449-9010
Fax: (302) 353-4251
rwilliams@devlinlawfirm.com

SERVICE INFORMATION:

Service information is as follows: DEVLIN LAW FIRM LLC, 1526 Gilpin Ave., Wilmington, DE 19806; Phone: (302) 449-9010; Fax: (302) 353-4251; Michigan Motor Technologies LLC consents to service by electronic mail at TD-PTAB@devlinlawfirm.com; tdevlin@devlinlawfirm.com; rwilliams@devlinlawfirm.com, mmcclain@devlinlawfirm.com and fxu@devlinlawfirm.com.

Michigan Motor Technologies LLC believes this submission fulfills the requirements of 37 C.F.R. § 42.8. If additional information is required, please contact the undersigned counsel at the address shown below.

Should the Board require any further information, the Board is encouraged to contact the Patent Owner's undersigned representative at the telephone number listed below.

Respectfully submitted,

Dated: February 14, 2020

DEVLIN LAW FIRM LLC

By: *<u>/s/ Timothy Devlin</u>*
Timothy Devlin
Reg. No. 41706
1526 Gilpin Ave.
Wilmington, DE 19806
Phone: (302) 449-9010
tdevlin@devlinlawfirm.com

Attorney for Patent Owner

<u>CERTIFICATE OF SERVICE</u>

I hereby certify that on February 14, 2020, I caused a true and correct copy of this Mandatory Notice to be served via electronic mail on Counsel for Petitioner:

Sterne, Kessler, Goldstein & Fox P.L.L.C.
mspecht-PTAB@sternekessler.com;
jfitzsimmons-PTAB@sternekessler.com;
dyonan-PTAB@sternekessler.com;
kconklin-PTAB@sternekessler.com;
jhiggins-PTAB@sternekessler.com;
PTAB@sternekessler.com.

<u>/s/ Timothy Devlin</u>
Timothy Devlin

UNITED STATES PATENT AND TRADEMARK OFFICE

BEFORE THE PATENT TRIAL AND APPEAL BOARD

VOLKSWAGEN GROUP OF AMERICA, INC.,
Petitioner,

v.

MICHIGAN MOTOR TECHNOLOGIES LLC,
Patent Owner

IPR2020-00445
Patent 6,581,565

PATENT OWNER'S MANDATORY NOTICES

Mail Stop PATENT BOARD
Patent Trial and Appeal Board
US Patent and Trademark Office
P.O. Box 1450
Alexandria, VA 22313-1450

Through the undersigned Counsel, Patent Owner, Michigan Motor Technologies LLC, is submitting the following Mandatory Notice pursuant to 37 C.F.R. § 42.9(a)(2).

REAL PARTY-IN-INTEREST

Michigan Motor Technologies LLC certifies that it is the real party-in-interest as it is the owner of the Patent No. 6,581,565.

RELATED MATTERS:

The Patent Owner identifies the following judicial and/or administrative matters that may affect, or may be affected by, a decision in the *Inter Partes* Review:

Michigan Motor Technologies LLC v. Volkswagen AG, Case No. 2:19-cv-10485 (E.D. Mich.), filed February 18, 2019; *Michigan Motor Technologies LLC v. Volkswagen AG*, Case No. 2:19-cv-10485 (E.D. Mich.), amended Complaint filed January 6, 2020.

LEAD AND BACKUP COUNSEL:

Pursuant to 37 C.F.R. §§ 42.8(b)(3) and 42.01(a), Michigan Motor Technologies LLC designates the following:

Lead Counsel:
Timothy Devlin, Reg. No. 41706
Devlin Law Firm LLC
1526 Gilpin Ave.
Wilmington, DE 19806
Phone: (302) 449-9010
Fax: (302) 353-4251
tdevlin@devlinlawfirm.com

Backup Counsel:
Robyn T. Williams (*pro hac vice* to be submitted)
Devlin Law Firm LLC
1526 Gilpin Ave.
Wilmington, DE 19806
Phone: (302) 449-9010
Fax: (302) 353-4251
rwilliams@devlinlawfirm.com

SERVICE INFORMATION:

Service information is as follows: DEVLIN LAW FIRM LLC, 1526 Gilpin Ave., Wilmington, DE 19806; Phone: (302) 449-9010; Fax: (302) 353-4251; Michigan Motor Technologies LLC consents to service by electronic mail at TD-PTAB@devlinlawfirm.com; tdevlin@devlinlawfirm.com; rwilliams@devlinlawfirm.com, mmcclain@devlinlawfirm.com and fxu@devlinlawfirm.com.

Michigan Motor Technologies LLC believes this submission fulfills the requirements of 37 C.F.R. § 42.8. If additional information is required, please contact the undersigned counsel at the address shown below.

Should the Board require any further information, the Board is encouraged to contact the Patent Owner's undersigned representative at the telephone number listed below.

Respectfully submitted,

Dated: February 14, 2020

DEVLIN LAW FIRM LLC

By: *<u>/s/ Timothy Devlin</u>*
Timothy Devlin
Reg. No. 41706
1526 Gilpin Ave.
Wilmington, DE 19806
Phone: (302) 449-9010
tdevlin@devlinlawfirm.com

Attorney for Patent Owner

<u>CERTIFICATE OF SERVICE</u>

I hereby certify that on February 14, 2020, I caused a true and correct copy of this Mandatory Notice to be served via electronic mail on Counsel for Petitioner:

Sterne, Kessler, Goldstein & Fox P.L.L.C.
mspecht-PTAB@sternekessler.com;
jfitzsimmons-PTAB@sternekessler.com;
dyonan-PTAB@sternekessler.com;
kconklin-PTAB@sternekessler.com;
jhiggins-PTAB@sternekessler.com;
PTAB@sternekessler.com.

<u>/s/ Timothy Devlin</u>
Timothy Devlin

UNITED STATES PATENT AND TRADEMARK OFFICE

BEFORE THE PATENT TRIAL AND APPEAL BOARD

VOLKSWAGEN GROUP OF AMERICA, INC.,

Petitioner,

v.

MICHIGAN MOTOR TECHNOLOGIES LLC,

Patent Owner

IPR2020-00444
Patent 6,581,565

PATENT OWNER'S POWER OF ATTORNEY AND CHANGE OF

CORRESPONDENCE ADDRESS FOR INTER PARTES REVIEW

Mail Stop PATENT BOARD
Patent Trial and Appeal Board
US Patent and Trademark Office
P.O. Box 1450
Alexandria, VA 22313-1450

I. Designation of Power of Attorney

I hereby appoint Practitioner(s) associated with Customer Number 163393 as my attorney(s) to prosecute the aforementioned proceeding, and to transact all business in the United States Patent and Trademark Office connected therewith, including the appointment of lead counsel.

II. Change of Correspondence Address

Please recognize the correspondence address (including any electronic mail address) for the above-identified Inter Partes Review proceeding number to be the address associated with the appointed lead counsel.

III. Authorization for Power of Attorney and Change of Correspondence Address

I am the patent owner, having filed a Power of Attorney by Applicant and a Statement under 37 CFR 3.73(c) in connection with this proceeding (attached as Exhibits A and B).

Respectfully submitted,

Dated: 8/5/2019

By: KCBrady

Kevin Brady
Managing Member
Michigan Motor Technologies LLC
Telephone: 215 298 3164

Doc Code: PA..
Document Description: Power of Attorney

PTO/AIA/82A (07-13)
Approved for use through 01/31/2018. OMB 0651-0035
U.S. Patent and Trademark Office; U.S. DEPARTMENT OF COMMERCE
Under the Paperwork Reduction Act of 1995, no persons are required to respond to a collection of information unless it displays a valid OMB control number.

TRANSMITTAL FOR POWER OF ATTORNEY TO ONE OR MORE REGISTERED PRACTITIONERS

NOTE: This form is to be submitted with the Power of Attorney by Applicant form (PTO/AIA/82B) to identify the application to which the Power of Attorney is directed, in accordance with 37 CFR 1.5, unless the application number and filing date are identified in the Power of Attorney by Applicant form. If neither form PTO/AIA/82A nor form PTO/AIA82B identifies the application to which the Power of Attorney is directed, the Power of Attorney will not be recognized in the application.

Application Number	10/191,641
Filing Date	July 9, 2002
First Named Inventor	Garon Nigel Heslop
Title	ENGINE TORQUE CONTROLLER
Art Unit	3747
Examiner Name	Argenbright, Tony Michael
Attorney Docket Number	

SIGNATURE of Applicant or Patent Practitioner

Signature	/Timothy Devlin/	Date (Optional)	2020-02-05
Name	Timothy Devlin	Registration Number	41706
Title (if Applicant is a juristic entity)	Attorney for Applicant		
Applicant Name (if Applicant is a juristic entity)	Michigan Motor Technologies LLC		

NOTE: This form must be signed in accordance with 37 CFR 1.33. See 37 CFR 1.4(d) for signature requirements and certifications. If more than one applicant, use multiple forms.

☑ *Total of 1 forms are submitted.

This collection of information is required by 37 CFR 1.131, 1.32, and 1.33. The information is required to obtain or retain a benefit by the public which is to file (and by the USPTO to process) an application. Confidentiality is governed by 35 U.S.C. 122 and 37 CFR 1.11 and 1.14. This collection is estimated to take 3 minutes to complete, including gathering, preparing, and submitting the completed application form to the USPTO. Time will vary depending upon the individual case. Any comments on the amount of time you require to complete this form and/or suggestions for reducing this burden, should be sent to the Chief Information Officer, U.S. Patent and Trademark Office, U.S. Department of Commerce, P.O. Box 1450, Alexandria, VA 22313-1450. DO NOT SEND FEES OR COMPLETED FORMS TO THIS ADDRESS. **SEND TO: Commissioner for Patents, P.O. Box 1450, Alexandria, VA 22313-1450.**

If you need assistance in completing the form, call 1-800-PTO-9199 and select option 2.

EXHIBIT A

PTO/AIA/80 (07-17)
Approved for use through 01/31/2018. OMB 0651-0035
U.S. Patent and Trademark Office; U.S. DEPARTMENT OF COMMERCE
Under the Paperwork Reduction Act of 1995, no person is required to respond to a collection of information unless it displays a valid OMB control number

POWER OF ATTORNEY TO PROSECUTE APPLICATIONS BEFORE THE USPTO

I hereby revoke all previous powers of attorney given in the application identified in the attached statement under 37 CFR 3.73(c).

I hereby appoint:

☑ Practitioners associated with Customer Number: 163393

OR

☐ Practitioner(s) named below (if more than ten patent practitioners are to be named, then a customer number must be used):

Name	Registration Number	Name	Registration Number

As attorney(s) or agent(s) to represent the undersigned before the United States Patent and Trademark Office (USPTO) in connection with any and all patent applications assigned only to the undersigned according to the USPTO assignment records or assignment documents attached to this form in accordance with 37 CFR 3.73(c).

Please change the correspondence address for the application identified in the attached statement under 37 CFR 3.73(c) to:

☑ The address associated with Customer Number: 163393

OR

☐

Firm or individual name		
Address		
City	State	Zip
Country		
Telephone	Email	

Assignee name and address: MICHIGAN MOTOR TECHNOLOGIES LLC
2360 ORCHARD LAKE ROAD, SUITE 100
SYLVAN LAKE, MICHIGAN 48320

A copy of this form, together with a statement under 37 CFR 3.73(c) (Form PTO/AIA/96 or equivalent) is required to be filed in each application in which this form is used. The statement under 37 CFR 3.73(c) may be completed by one of the practitioners appointed in this form, and must identify the application in which this Power of Attorney is to be filed.

SIGNATURE of Assignee of Record

The individual whose signature and title is supplied below is authorized to act on behalf of the assignee.

Signature KCBrady	Date 8/5/2019
Name Kevin Brady	Telephone 215 298 3164
Title Managing Member	

This collection of information is required by 37 CFR 1.31, 1.32, and 1.33. The information is required to obtain or retain a benefit by the public, which is to update (and by the USPTO to process) the file of a patent or reexamination proceeding. Confidentiality is governed by 35 U.S.C. 122 and 37 CFR 1.11 and 1.14. This collection is estimated to take 18 minutes to complete, including gathering, preparing, and submitting the completed application form to the USPTO. Time will vary depending upon the individual case. Any comments on the amount of time you require to complete this form and/or suggestions for reducing this burden, should be sent to the Chief Information Officer, U.S. Patent and Trademark Office, U.S. Department of Commerce, P.O. Box 1450, Alexandria, VA 22313-1450. DO NOT SEND FEES OR COMPLETED FORMS TO THIS ADDRESS. **SEND TO: Commissioner for Patents, P.O. Box 1450, Alexandria, VA 22313-1450.**
If you need assistance in completing the form, call 1-800-PTO-9199 and select option 2.

EXHIBIT A

PTO/AIA/96 (08-12)
Approved for use through 01/31/2013. OMB 0651-0031
U.S. Patent and Trademark Office; U.S. DEPARTMENT OF COMMERCE
Under the Paperwork Reduction Act of 1995, no persons are required to respond to a collection of information unless it displays a valid OMB control number.

STATEMENT UNDER 37 CFR 3.73(c)

Applicant/Patent Owner: Michigan Motor Technologies LLC

Application No./Patent No.: Patent No.: 6,581,565 Filed/Issue Date: Issued: June 24, 2003

Titled: ENGINE TORQUE CONTROLLER

Michigan Motor Technologies LLC, a limited liability company

(Name of Assignee) (Type of Assignee, e.g., corporation, partnership, university, government agency, etc.)

states that, for the patent application/patent identified above, it is (choose **one** of options 1, 2, 3 or 4 below):

1. ☑ The assignee of the entire right, title, and interest.

2. ☐ An assignee of less than the entire right, title, and interest (check applicable box):

☐ The extent (by percentage) of its ownership interest is _____%. Additional Statement(s) by the owners holding the balance of the interest must be submitted to account for 100% of the ownership interest.

☐ There are unspecified percentages of ownership. The other parties, including inventors, who together own the entire right, title and interest are:

Additional Statement(s) by the owner(s) holding the balance of the interest must be submitted to account for the entire right, title, and interest.

3. ☐ The assignee of an undivided interest in the entirety (a complete assignment from one of the joint inventors was made). The other parties, including inventors, who together own the entire right, title, and interest are:

Additional Statement(s) by the owner(s) holding the balance of the interest must be submitted to account for the entire right, title, and interest.

4. ☐ The recipient, via a court proceeding or the like (*e.g.*, bankruptcy, probate), of an undivided interest in the entirety (a complete transfer of ownership interest was made). The certified document(s) showing the transfer is attached.

The interest identified in option 1, 2 or 3 above (not option 4) is evidenced by either (choose **one** of options A or B below):

A. ☐ An assignment from the inventor(s) of the patent application/patent identified above. The assignment was recorded in the United States Patent and Trademark Office at Reel _____, Frame _____, or for which a copy thereof is attached.

B. ☑ A chain of title from the inventor(s), of the patent application/patent identified above, to the current assignee as follows:

1. From: Garon Nigel Heslop, Jon Dixon, Richard Stephen Blachford To: Visteon Global Technologies, Inc.

The document was recorded in the United States Patent and Trademark Office at Reel 013091, Frame 0632, or for which a copy thereof is attached.

2. From: Visteon Global Technologies, Inc. To: Godo Kaisha IP Bridge 1

The document was recorded in the United States Patent and Trademark Office at Reel 035421, Frame 0739, or for which a copy thereof is attached.

This collection of information is required by 37 CFR 3.73(b). The information is required to obtain or retain a benefit by the public which is to file (and by the USPTO to process) an application. Confidentiality is governed by 35 U.S.C. 122 and 37 CFR 1.11 and 1.14. This collection is estimated to take 12 minutes to complete, including gathering, preparing, and submitting the completed application form to the USPTO. Time will vary depending upon the individual case. Any comments on the amount of time you require to complete this form and/or suggestions for reducing this burden, should be sent to the Chief Information Officer, U.S. Patent and Trademark Office, U.S. Department of Commerce, P.O. Box 1450, Alexandria, VA 22313-1450. DO NOT SEND FEES OR COMPLETED FORMS TO THIS ADDRESS. **SEND TO: Commissioner for Patents, P.O. Box 1450, Alexandria, VA 22313-1450**.

If you need assistance in completing the form, call 1-800-PTO-9199 and select option 2.

EXHIBIT B

PTO/AIA/96 (08-12)
Approved for use through 01/31/2013. OMB 0651-0031
U.S. Patent and Trademark Office; U.S. DEPARTMENT OF COMMERCE
Under the Paperwork Reduction Act of 1995, no persons are required to respond to a collection of information unless it displays a valid OMB control number.

STATEMENT UNDER 37 CFR 3.73(c)

3. From: Godo Kaisha IP Bridge To: Mobile Automotive Technologies, LLC

The document was recorded in the United States Patent and Trademark Office at
Reel 043463, Frame 0223, or for which a copy thereof is attached.

4. From: Godo Kaisha IP Bridge To: Mobile Automotive Technologies, LLC

The document was recorded in the United States Patent and Trademark Office at
Reel 043843, Frame 0821, or for which a copy thereof is attached.

5. From: Mobile Automotive Technologies, LLC To: Michigan Motor Technologies LLC

The document was recorded in the United States Patent and Trademark Office at
Reel 043463, Frame 0881, or for which a copy thereof is attached.

6. From: _____ To: _____

The document was recorded in the United States Patent and Trademark Office at
Reel _____, Frame _____, or for which a copy thereof is attached.

☐ Additional documents in the chain of title are listed on a supplemental sheet(s).

☑ As required by 37 CFR 3.73(c)(1)(i), the documentary evidence of the chain of title from the original owner to the assignee was, or concurrently is being, submitted for recordation pursuant to 37 CFR 3.11.

[NOTE: A separate copy (i.e., a true copy of the original assignment document(s)) must be submitted to Assignment Division in accordance with 37 CFR Part 3, to record the assignment in the records of the USPTO. See MPEP 302.08]

The undersigned (whose title is supplied below) is authorized to act on behalf of the assignee.

/Timothy Devlin/	2020-02-05
Signature	Date
Timothy Devlin	Reg. No. 41706
Printed or Typed Name	Title or Registration Number

EXHIBIT B

Electronic Acknowledgement Receipt

EFS ID:	38496608
Application Number:	10191641
International Application Number:	
Confirmation Number:	4815
Title of Invention:	ENGINE TORQUE CONTROLLER
First Named Inventor/Applicant Name:	Garon Nigel Heslop
Customer Number:	24939
Filer:	Timothy Devlin/Pat Mathews
Filer Authorized By:	Timothy Devlin
Attorney Docket Number:	10541-1524
Receipt Date:	05-FEB-2020
Filing Date:	09-JUL-2002
Time Stamp:	10:47:22
Application Type:	Utility under 35 USC 111(a)

Payment information:

Submitted with Payment	no

File Listing:

Document Number	Document Description	File Name	File Size(Bytes)/ Message Digest	Multi Part /.zip	Pages (if appl.)
1		2020-02-05-USPN6581565-MMT-Transmittal-POA-as-filed.pdf	316425 9e1e22f7196a7d37b92d6667bd3cb9b0e0f099bd	yes	2

EXHIBIT B

	Multipart Description/PDF files in .zip description		
	Document Description	**Start**	**End**
	Transmittal Letter	1	1
	Power of Attorney	2	2

Warnings:

Information:

2	Assignee showing of ownership per 37 CFR 3.73	2020-02-05-USPN6581565-MMT-373c-Statement-as-filed.pdf	124048 d29e6571a6d3748bc6a883a846805795a7ffeab9	no	3

Warnings:

Information:

Total Files Size (in bytes):	440473

This Acknowledgement Receipt evidences receipt on the noted date by the USPTO of the indicated documents, characterized by the applicant, and including page counts, where applicable. It serves as evidence of receipt similar to a Post Card, as described in MPEP 503.

New Applications Under 35 U.S.C. 111
If a new application is being filed and the application includes the necessary components for a filing date (see 37 CFR 1.53(b)-(d) and MPEP 506), a Filing Receipt (37 CFR 1.54) will be issued in due course and the date shown on this Acknowledgement Receipt will establish the filing date of the application.
National Stage of an International Application under 35 U.S.C. 371
If a timely submission to enter the national stage of an international application is compliant with the conditions of 35 U.S.C. 371 and other applicable requirements a Form PCT/DO/EO/903 indicating acceptance of the application as a national stage submission under 35 U.S.C. 371 will be issued in addition to the Filing Receipt, in due course.
New International Application Filed with the USPTO as a Receiving Office
If a new international application is being filed and the international application includes the necessary components for an international filing date (see PCT Article 11 and MPEP 1810), a Notification of the International Application Number and of the International Filing Date (Form PCT/RO/105) will be issued in due course, subject to prescriptions concerning national security, and the date shown on this Acknowledgement Receipt will establish the international filing date of the application.

EXHIBIT B

CERTIFICATE OF SERVICE

I hereby certify that on February 14, 2020 I caused a true and correct copy of Patent Owner's Power of Attorney and Change of Correspondence Address for Inter Partes Review, with Exhibits A and B, to be served via electronic mail on the following counsel for Petitioner:

Sterne, Kessler, Goldstein & Fox P.L.L.C.
1100 New York Avenue, N.W.
Washington, D.C. 20005-3934
Telephone: (202) 371-2600
mspecht-PTAB@sternekessler.com;
jfitzsimmons-PTAB@sternekessler.com;
dyonan-PTAB@sternekessler.com;
kconklin-PTAB@sternekessler.com;
jhiggins-PTAB@sternekessler.com;
PTAB@sternekessler.com.

Dated: February 14, 2020

Respectfully submitted,

DEVLIN LAW FIRM LLC

By: */s/ Timothy Devlin*
Timothy Devlin
Reg. No. 41706
1526 Gilpin Ave.
Wilmington, DE 19806
Phone: (302) 449-9010
tdevlin@devlinlawfirm.com

Attorney for Patent Owner

UNITED STATES PATENT AND TRADEMARK OFFICE

BEFORE THE PATENT TRIAL AND APPEAL BOARD

VOLKSWAGEN GROUP OF AMERICA, INC.,

Petitioner,

v.

MICHIGAN MOTOR TECHNOLOGIES LLC,

Patent Owner

IPR2020-00445
Patent 6,581,565

PATENT OWNER'S POWER OF ATTORNEY AND CHANGE OF

CORRESPONDENCE ADDRESS FOR INTER PARTES REVIEW

Mail Stop PATENT BOARD
Patent Trial and Appeal Board
US Patent and Trademark Office
P.O. Box 1450
Alexandria, VA 22313-1450

I. Designation of Power of Attorney

I hereby appoint Practitioner(s) associated with Customer Number 163393 as my attorney(s) to prosecute the aforementioned proceeding, and to transact all business in the United States Patent and Trademark Office connected therewith, including the appointment of lead counsel.

II. Change of Correspondence Address

Please recognize the correspondence address (including any electronic mail address) for the above-identified Inter Partes Review proceeding number to be the address associated with the appointed lead counsel.

III. Authorization for Power of Attorney and Change of Correspondence Address

I am the patent owner, having filed a Power of Attorney by Applicant and a Statement under 37 CFR 3.73(c) in connection with this proceeding (attached as Exhibits A and B).

Respectfully submitted,

Dated: 8/5/2019

By: KCBrady

Kevin Brady
Managing Member
Michigan Motor Technologies LLC
Telephone: 215 298 3164

Doc Code: PA..
Document Description: Power of Attorney

PTO/AIA/82A (07-13)
Approved for use through 01/31/2018. OMB 0651-0035
U.S. Patent and Trademark Office; U.S. DEPARTMENT OF COMMERCE
Under the Paperwork Reduction Act of 1995, no persons are required to respond to a collection of information unless it displays a valid OMB control number.

TRANSMITTAL FOR POWER OF ATTORNEY TO ONE OR MORE REGISTERED PRACTITIONERS

NOTE: This form is to be submitted with the Power of Attorney by Applicant form (PTO/AIA/82B) to identify the application to which the Power of Attorney is directed, in accordance with 37 CFR 1.5, unless the application number and filing date are identified in the Power of Attorney by Applicant form. If neither form PTO/AIA/82A nor form PTO/AIA82B identifies the application to which the Power of Attorney is directed, the Power of Attorney will not be recognized in the application.

Application Number	10/191,641
Filing Date	July 9, 2002
First Named Inventor	Garon Nigel Heslop
Title	ENGINE TORQUE CONTROLLER
Art Unit	3747
Examiner Name	Argenbright, Tony Michael
Attorney Docket Number	

SIGNATURE of Applicant or Patent Practitioner

Signature	/Timothy Devlin/	Date (Optional)	2020-02-05
Name	Timothy Devlin	Registration Number	41706
Title (if Applicant is a juristic entity)	Attorney for Applicant		
Applicant Name (if Applicant is a juristic entity)	Michigan Motor Technologies LLC		

NOTE: This form must be signed in accordance with 37 CFR 1.33. See 37 CFR 1.4(d) for signature requirements and certifications. If more than one applicant, use multiple forms.

☑ *Total of 1 forms are submitted.

This collection of information is required by 37 CFR 1.131, 1.32, and 1.33. The information is required to obtain or retain a benefit by the public which is to file (and by the USPTO to process) an application. Confidentiality is governed by 35 U.S.C. 122 and 37 CFR 1.11 and 1.14. This collection is estimated to take 3 minutes to complete, including gathering, preparing, and submitting the completed application form to the USPTO. Time will vary depending upon the individual case. Any comments on the amount of time you require to complete this form and/or suggestions for reducing this burden, should be sent to the Chief Information Officer, U.S. Patent and Trademark Office, U.S. Department of Commerce, P.O. Box 1450, Alexandria, VA 22313-1450. DO NOT SEND FEES OR COMPLETED FORMS TO THIS ADDRESS. **SEND TO: Commissioner for Patents, P.O. Box 1450, Alexandria, VA 22313-1450.**

If you need assistance in completing the form, call 1-800-PTO-9199 and select option 2.

EXHIBIT A

PTO/AIA/80 (07-17)
Approved for use through 01/31/2018. OMB 0651-0035
U.S. Patent and Trademark Office; U.S. DEPARTMENT OF COMMERCE
Under the Paperwork Reduction Act of 1995, no person is required to respond to a collection of information unless it displays a valid OMB control number

POWER OF ATTORNEY TO PROSECUTE APPLICATIONS BEFORE THE USPTO

I hereby revoke all previous powers of attorney given in the application identified in the attached statement under 37 CFR 3.73(c).

I hereby appoint:

☑ Practitioners associated with Customer Number: 163393

OR

☐ Practitioner(s) named below (if more than ten patent practitioners are to be named, then a customer number must be used):

Name	Registration Number	Name	Registration Number

As attorney(s) or agent(s) to represent the undersigned before the United States Patent and Trademark Office (USPTO) in connection with any and all patent applications assigned only to the undersigned according to the USPTO assignment records or assignment documents attached to this form in accordance with 37 CFR 3.73(c).

Please change the correspondence address for the application identified in the attached statement under 37 CFR 3.73(c) to:

☑ The address associated with Customer Number: 163393

OR

☐

Firm or individual name		
Address		
City	State	Zip
Country		
Telephone	Email	

Assignee name and address: MICHIGAN MOTOR TECHNOLOGIES LLC
2360 ORCHARD LAKE ROAD, SUITE 100
SYLVAN LAKE, MICHIGAN 48320

A copy of this form, together with a statement under 37 CFR 3.73(c) (Form PTO/AIA/96 or equivalent) is required to be filed in each application in which this form is used. The statement under 37 CFR 3.73(c) may be completed by one of the practitioners appointed in this form, and must identify the application in which this Power of Attorney is to be filed.

SIGNATURE of Assignee of Record

The individual whose signature and title is supplied below is authorized to act on behalf of the assignee.

Signature KCBrady	Date 8/5/2019
Name Kevin Brady	Telephone 215 298 3164
Title Managing Member	

This collection of information is required by 37 CFR 1.31, 1.32, and 1.33. The information is required to obtain or retain a benefit by the public, which is to update (and by the USPTO to process) the file of a patent or reexamination proceeding. Confidentiality is governed by 35 U.S.C. 122 and 37 CFR 1.11 and 1.14. This collection is estimated to take 18 minutes to complete, including gathering, preparing, and submitting the completed application form to the USPTO. Time will vary depending upon the individual case. Any comments on the amount of time you require to complete this form and/or suggestions for reducing this burden, should be sent to the Chief Information Officer, U.S. Patent and Trademark Office, U.S. Department of Commerce, P.O. Box 1450, Alexandria, VA 22313-1450. DO NOT SEND FEES OR COMPLETED FORMS TO THIS ADDRESS. **SEND TO: Commissioner for Patents, P.O. Box 1450, Alexandria, VA 22313-1450.**
If you need assistance in completing the form, call 1-800-PTO-9199 and select option 2.

EXHIBIT A

PTO/AIA/96 (08-12)
Approved for use through 01/31/2013. OMB 0651-0031
U.S. Patent and Trademark Office; U.S. DEPARTMENT OF COMMERCE
Under the Paperwork Reduction Act of 1995, no persons are required to respond to a collection of information unless it displays a valid OMB control number.

STATEMENT UNDER 37 CFR 3.73(c)

Applicant/Patent Owner: Michigan Motor Technologies LLC

Application No./Patent No.: Patent No.: 6,581,565 Filed/Issue Date: Issued: June 24, 2003

Titled: ENGINE TORQUE CONTROLLER

Michigan Motor Technologies LLC, a limited liability company

(Name of Assignee) (Type of Assignee, e.g., corporation, partnership, university, government agency, etc.)

states that, for the patent application/patent identified above, it is (choose **one** of options 1, 2, 3 or 4 below):

1. ☑ The assignee of the entire right, title, and interest.

2. ☐ An assignee of less than the entire right, title, and interest (check applicable box):

☐ The extent (by percentage) of its ownership interest is _____%. Additional Statement(s) by the owners holding the balance of the interest must be submitted to account for 100% of the ownership interest.

☐ There are unspecified percentages of ownership. The other parties, including inventors, who together own the entire right, title and interest are:

Additional Statement(s) by the owner(s) holding the balance of the interest must be submitted to account for the entire right, title, and interest.

3. ☐ The assignee of an undivided interest in the entirety (a complete assignment from one of the joint inventors was made). The other parties, including inventors, who together own the entire right, title, and interest are:

Additional Statement(s) by the owner(s) holding the balance of the interest must be submitted to account for the entire right, title, and interest.

4. ☐ The recipient, via a court proceeding or the like (*e.g.*, bankruptcy, probate), of an undivided interest in the entirety (a complete transfer of ownership interest was made). The certified document(s) showing the transfer is attached.

The interest identified in option 1, 2 or 3 above (not option 4) is evidenced by either (choose **one** of options A or B below):

A. ☐ An assignment from the inventor(s) of the patent application/patent identified above. The assignment was recorded in the United States Patent and Trademark Office at Reel _____, Frame _____, or for which a copy thereof is attached.

B. ☑ A chain of title from the inventor(s), of the patent application/patent identified above, to the current assignee as follows:

1. From: Garon Nigel Heslop, Jon Dixon, Richard Stephen Blachford To: Visteon Global Technologies, Inc.

The document was recorded in the United States Patent and Trademark Office at Reel 013091, Frame 0632, or for which a copy thereof is attached.

2. From: Visteon Global Technologies, Inc. To: Godo Kaisha IP Bridge 1

The document was recorded in the United States Patent and Trademark Office at Reel 035421, Frame 0739, or for which a copy thereof is attached.

This collection of information is required by 37 CFR 3.73(b). The information is required to obtain or retain a benefit by the public which is to file (and by the USPTO to process) an application. Confidentiality is governed by 35 U.S.C. 122 and 37 CFR 1.11 and 1.14. This collection is estimated to take 12 minutes to complete, including gathering, preparing, and submitting the completed application form to the USPTO. Time will vary depending upon the individual case. Any comments on the amount of time you require to complete this form and/or suggestions for reducing this burden, should be sent to the Chief Information Officer, U.S. Patent and Trademark Office, U.S. Department of Commerce, P.O. Box 1450, Alexandria, VA 22313-1450. DO NOT SEND FEES OR COMPLETED FORMS TO THIS ADDRESS. **SEND TO: Commissioner for Patents, P.O. Box 1450, Alexandria, VA 22313-1450**.

If you need assistance in completing the form, call 1-800-PTO-9199 and select option 2.

EXHIBIT B

PTO/AIA/96 (08-12)
Approved for use through 01/31/2013. OMB 0651-0031
U.S. Patent and Trademark Office; U.S. DEPARTMENT OF COMMERCE
Under the Paperwork Reduction Act of 1995, no persons are required to respond to a collection of information unless it displays a valid OMB control number.

STATEMENT UNDER 37 CFR 3.73(c)

3. From: Godo Kaisha IP Bridge To: Mobile Automotive Technologies, LLC

The document was recorded in the United States Patent and Trademark Office at
Reel 043463, Frame 0223, or for which a copy thereof is attached.

4. From: Godo Kaisha IP Bridge To: Mobile Automotive Technologies, LLC

The document was recorded in the United States Patent and Trademark Office at
Reel 043843, Frame 0821, or for which a copy thereof is attached.

5. From: Mobile Automotive Technologies, LLC To: Michigan Motor Technologies LLC

The document was recorded in the United States Patent and Trademark Office at
Reel 043463, Frame 0881, or for which a copy thereof is attached.

6. From: _____ To: _____

The document was recorded in the United States Patent and Trademark Office at
Reel _____, Frame _____, or for which a copy thereof is attached.

☐ Additional documents in the chain of title are listed on a supplemental sheet(s).

☑ As required by 37 CFR 3.73(c)(1)(i), the documentary evidence of the chain of title from the original owner to the assignee was, or concurrently is being, submitted for recordation pursuant to 37 CFR 3.11.

[NOTE: A separate copy (i.e., a true copy of the original assignment document(s)) must be submitted to Assignment Division in accordance with 37 CFR Part 3, to record the assignment in the records of the USPTO. See MPEP 302.08]

The undersigned (whose title is supplied below) is authorized to act on behalf of the assignee.

/Timothy Devlin/	2020-02-05
Signature	Date
Timothy Devlin	Reg. No. 41706
Printed or Typed Name	Title or Registration Number

EXHIBIT B

Electronic Acknowledgement Receipt

EFS ID:	38496608
Application Number:	10191641
International Application Number:	
Confirmation Number:	4815
Title of Invention:	ENGINE TORQUE CONTROLLER
First Named Inventor/Applicant Name:	Garon Nigel Heslop
Customer Number:	24939
Filer:	Timothy Devlin/Pat Mathews
Filer Authorized By:	Timothy Devlin
Attorney Docket Number:	10541-1524
Receipt Date:	05-FEB-2020
Filing Date:	09-JUL-2002
Time Stamp:	10:47:22
Application Type:	Utility under 35 USC 111(a)

Payment information:

Submitted with Payment	no

File Listing:

Document Number	Document Description	File Name	File Size(Bytes)/ Message Digest	Multi Part /.zip	Pages (if appl.)
1		2020-02-05-USPN6581565-MMT-Transmittal-POA-as-filed.pdf	316425 9e1e22f7196a7d37b92d6667bd3cb9b0e0f099bd	yes	2

EXHIBIT B

	Multipart Description/PDF files in .zip description		
	Document Description	**Start**	**End**
	Transmittal Letter	1	1
	Power of Attorney	2	2

Warnings:

Information:

2	Assignee showing of ownership per 37 CFR 3.73	2020-02-05-USPN6581565-MMT-373c-Statement-as-filed.pdf	124048 d29e6571a6d3748bc6a883a846805795a7ffeab9	no	3

Warnings:

Information:

Total Files Size (in bytes):	440473

This Acknowledgement Receipt evidences receipt on the noted date by the USPTO of the indicated documents, characterized by the applicant, and including page counts, where applicable. It serves as evidence of receipt similar to a Post Card, as described in MPEP 503.

New Applications Under 35 U.S.C. 111
If a new application is being filed and the application includes the necessary components for a filing date (see 37 CFR 1.53(b)-(d) and MPEP 506), a Filing Receipt (37 CFR 1.54) will be issued in due course and the date shown on this Acknowledgement Receipt will establish the filing date of the application.
National Stage of an International Application under 35 U.S.C. 371
If a timely submission to enter the national stage of an international application is compliant with the conditions of 35 U.S.C. 371 and other applicable requirements a Form PCT/DO/EO/903 indicating acceptance of the application as a national stage submission under 35 U.S.C. 371 will be issued in addition to the Filing Receipt, in due course.
New International Application Filed with the USPTO as a Receiving Office
If a new international application is being filed and the international application includes the necessary components for an international filing date (see PCT Article 11 and MPEP 1810), a Notification of the International Application Number and of the International Filing Date (Form PCT/RO/105) will be issued in due course, subject to prescriptions concerning national security, and the date shown on this Acknowledgement Receipt will establish the international filing date of the application.

EXHIBIT B

CERTIFICATE OF SERVICE

I hereby certify that on February 14, 2020 I caused a true and correct copy of Patent Owner's Power of Attorney and Change of Correspondence Address for Inter Partes Review, with Exhibits A and B, to be served via electronic mail on the following counsel for Petitioner:

Sterne, Kessler, Goldstein & Fox P.L.L.C.
1100 New York Avenue, N.W.
Washington, D.C. 20005-3934
Telephone: (202) 371-2600
mspecht-PTAB@sternekessler.com;
jfitzsimmons-PTAB@sternekessler.com;
dyonan-PTAB@sternekessler.com;
kconklin-PTAB@sternekessler.com;
jhiggins-PTAB@sternekessler.com;
PTAB@sternekessler.com.

Dated: February 14, 2020

Respectfully submitted,

DEVLIN LAW FIRM LLC

By: */s/ Timothy Devlin*
Timothy Devlin
Reg. No. 41706
1526 Gilpin Ave.
Wilmington, DE 19806
Phone: (302) 449-9010
tdevlin@devlinlawfirm.com

Attorney for Patent Owner

UNITED STATES PATENT AND TRADEMARK OFFICE

BEFORE THE PATENT TRIAL AND APPEAL BOARD

Volkswagen Group of America, Inc.,
Petitioner

v.

Michigan Motor Technologies LLC,
Patent Owner

Case IPR2020-00444
Patent No. 6,581,565

PATENT OWNER'S PRELIMINARY RESPONSE

Under 35 U.S.C. § 42.107

Mail Stop PATENT BOARD
Patent Trial and Appeal Board
U.S. Patent and Trademark Office
P.O. Box 1450
Alexandria, VA 22313-1450
Submitted Electronically via PTAB E2E

TABLE OF CONTENTS

I. INTRODUCTION 1

II. APPLICABLE LEGAL PRINCIPLES 5

III. THE '565 PATENT 7

A. Challenged Claims 11

B. Person of Ordinary Skill in the Art 12

IV. CLAIM CONSTRUCTION 13

V. OVERVIEW OF CITED PRIOR ART 13

A. Suzuki 14

B. Cullen 18

C. Scherer 19

D. Takahashi 21

VI. THE PETITION SHOULD BE REJECTED UNDER § 314(A) BECAUSE PETITIONER IS UNLIKELY TO PREVAIL WITH RESPECT TO ANY CHALLENGED CLAIM 21

VII. CONCLUSION 24

TABLE OF AUTHORITIES

Federal Cases

Apple Inc. v. Contentguard Holdings, Inc.,
IPR2015-00442, Paper 9 (PTAB July 13, 2015) 9, 10, 11

Back in Five, Ltd. Liab. Co. v. Infinite Int'l Inc.,
No. CV 11-00243 GAF (AJWx), 2012 U.S. Dist. LEXIS 199183 (C.D. Cal. Sep. 11, 2012) 31

Graham v. John Deere Co.,
383 U.S. 1 (1966).....9

In re Magnum Oil Tools Int'l.,
829 F.3d 1364 (Fed. Cir. 2016) 9, 10

In re NTP, Inc.,
654 F.3d 1279 (Fed. Cir. 2011) 11

In re Omeprazole Patent Litig. v. Apotex Corp.,
536 F.3d 1361 (Fed. Cir. 2008) 10

In re Stepan Co.,
868 F.3d 1342 (Fed. Cir. 2017) 10

InTouch Techs., Inc. v. VGo Communs., Inc.,
751 F.3d 1327 (Fed. Cir. 2014) 10

KSR Int'l Co. v. Teleflex Inc.,
550 U.S. 398 (2007)..... 11, 29

Ortho-McNeil Pharm. v. Mylan Labs,
520 F.3d 1358 (Fed. Cir. 2008) 11

P&G v. Teva Pharms. USA, Inc.,
566 F.3d 989 (Fed. Cir. 2009) 11

SAS Institute Inc. v. Iancu,
138 S. Ct. 1348 (2018).....9

Unified Patents Inc. v. C-Cation Techs., LLC,
IPR2015-01045, Paper 15 (PTAB Oct. 7, 2015).....9

Unigene Labs., Inc. v. Apotex, Inc.,
655 F.3d 1352 (Fed. Cir. 2011) 10

Federal Statutes

35 U.S.C. § 103 9

35 U.S.C. 282 19

37 C.F.R. § 42.100 19

37 C.F.R. § 42.107 1

TABLE OF EXHIBITS

Exhibit	Description
2001	Expert Declaration of Dr. Russell Leonard

Petitioner Volkswagen Group of America, Inc. ("VWoA" or "Petitioner") filed a Petition for *Inter Partes* Review of U.S. Patent No. 6,581,565 ("the '565 patent") on January 31, 2020. (IPR2020-00444, Paper No. 2 ("Petition" or "Pet.").) Through the undersigned Counsel, Patent Owner, Michigan Motor Technologies LLC ("MMT"), submits the following Patent Owner's Preliminary Response pursuant to 37 C.F.R. § 42.107 (a). *See also* 37 C.F.R. § 42.107 (b).

I. INTRODUCTION

Patent Owner, MMT, respectfully requests that the Board deny the Petition because Petitioner failed to show that there is a reasonable likelihood that it would prevail with respect to at least one of the claims challenged in the Petition.

Specifically, Petitioner has not demonstrated a reasonable likelihood that any claim of the '565 patent would be obvious in view of the *Suzuki* (Exhibit 1005), *Cullen* (Exhibit 1006), *Scherer* (Exhibit 1007), and *Takahashi* (Exhibit 1008) references relied upon by the Petitioner. For each ground, Petitioner relies upon *Scherer* as the primary reference, and relies upon *Suzuki, Cullen,* and *Takahashi* as secondary references.

Generally, the '565 patent is directed to an engine torque controller for a spark ignition internal combustion engine, specifically, for a Direct Injection Spark Ignition (DISI) engine. (Exhibit 1001 at Abstract, 1:5-8, 1:62-63, Fig. 1.) The '565 patent discloses and claims a torque controller and a method for controlling

torque for an engine in which torque is controlled in dependence upon a high-pass filtered difference signal that represents the difference between a desired torque signal and a signal representing an estimate of the current torque. (Ex. 1001 at Abstract.)

Suzuki

Suzuki discloses a system comprising an engine controller capable of operating in homogenous and stratified mode with means to determine load and correct torque and vary spark timing or ratio of air and fuel based on the load detected. (Ex. 1005 at 15:46-16:2.) *Suzuki* does not disclose using a high-pass filter. (Ex. 2001 at ¶ 32.)

Cullen

Cullen discloses a method of inferring and predicting engine torque where friction torque is accounted for through a speed/air charge -look-up table. (Ex. 1006 at Abstract.) The method in *Cullen* is directed to an automatic transmission that relies on predicting the torque produced by the engine, which is coupled to the transmission. (Leonard Declaration, Exhibit 2002 at ¶ 37.) The accuracy of the calculation for engine torque prediction is made more robust by including factors in the calculation that affect torque such as: air conditioning operation, power steering operation, cold engine friction, green (new) engine friction, non-gasoline fuel usage and cylinder deactivation. (*Id*. at ¶ 38.)

Scherer

Scherer discloses a process and an apparatus for controlling the engine torque of an internal combustion engine by regulating the ignition point in an Otto engine, or by regulating the start and the duration of the fuel injection in a diesel engine. (Ex. 1007 at Abstract, 1:7-11.)

Takahashi

Takahashi controls the throttle valve and fuel injection in a manner that ensures the engine output torque and air/fuel ratio match target values. (Ex. 1008 at 43-65.)

Petitioner asserts that the combination of *Suzuki*, *Cullen*, and *Scherer* renders obvious claims 1, 4, and 7 in its first Ground. (Paper No. 2 at 24.)

Petitioner relies upon *Scherer* as a primary reference for all Grounds of Challenge. (*Id*. at 24, 70.) A POSA would not consider combining *Scherer* with *Suzuki* or any other prior art reference relied upon by Petitioner because they teach away from each other and the '565 patent as shown below. (Ex. 2001 at 51.)

Scherer does not disclose a stratified charge operation mode for a DISI engine as the '565 patent teaches. (Exhibit 2001, Leonard Declaration at ¶¶ 42-45.) Further, *Scherer* discloses adjusting the torque of an internal combustion engine by regulating the start and the duration of fuel injection in a diesel engine. (Ex. 1007 at 1:5-12.) Although *Scherer* discloses a high-pass filter, it is not

employed in the unique manner of the teachings and challenged claims of the '565 patent. (Ex. 2001 at ¶ 45.) *Scherer* only filters a desired engine torque signal and does not high-pass filter "the difference signal." (Ex. 2001 at ¶¶ 30-39.)

The '565 patent teaches a device controlling torque output of an engine comprising a high-pass filter which receives as an input the difference signal and outputs a high-pass filtered difference signal in which low frequency noise is eliminated; and a transient torque controller which receives as an input the high-pass filtered difference signal and outputs a fuel adjustment signal and a spark adjustment signal. (Ex. 1001 at 4:1-22.)

Scherer discloses adjusting engine torque where an ignition point adjusting branch with the input-side high-pass filter is parallel to the air-flow rate regulating branch. (Ex. 1007 at 4:20-52.) The ignition point adjusting branch is used only to adjust desired engine torque which cannot be regulated by the air-flow rate regulating branch. (*Id*.) Otherwise stated, *Scherer* uses a high-pass filter in a homogenous mode of operation, whereas, the '565 patent teaches using a high-pass filter for stratified and homogeneous modes of operation. (Ex. 1001 at 3:40-49.) Further, *Scherer* only filters a desired engine torque signal and does not high-pass filter "the difference signal." (Ex. 2001 at ¶¶ 30-39.)

To support its obviousness analysis, Petitioner attempts to modify *Scherer*, which is already of record, with selective teachings of two or more secondary

references, which are cumulative of the admitted prior art of the '565 patent, to arrive at a claimed combination that none of these references discloses.

II. APPLICABLE LEGAL PRINCIPLES

"[T]he decision whether to institute an *inter partes* review is discretionary." *Unified Patents Inc. v. C-Cation Techs., LLC*, IPR2015-01045, Paper 15 at 3 (PTAB Oct. 7, 2015) (citing 37 C.F.R. § 42.108 (a)). Petitioner has the burden to show that it is likely to prevail as to at least one claim of the '565 patent. 35 U.S.C. § 314; *SAS Institute Inc. v. Iancu*, 138 S. Ct. 1348 (2018).

To make a prima facie showing of obviousness under 35 U.S.C. § 103, the Petition must, among other requirements, fulfill the requirements set forth in *Graham v. John Deere Co.*, 383 U.S. 1 (1966), including demonstrating that the cited references disclose each element of a challenged claim. *In re Magnum Oil Tools Int'l.*, 829 F.3d 1364, 1376 (Fed. Cir. 2016); *see also Apple Inc. v. Contentguard Holdings, Inc.*, IPR2015-00442, Paper 9 at 12-13 (PTAB July 13, 2015).

Petitioner also has the burden to show there would have been some motivation to combine the asserted prior art, and that the proposed combination would render the patented claims obvious. "Obviousness requires more than a mere showing that the prior art includes separate references covering each separate limitation in a claim under examination." *Unigene Labs., Inc. v. Apotex, Inc.*, 655

F.3d 1352, 1360 (Fed. Cir. 2011) (internal citation omitted); *see also In re Magnum Oil Tools Int'l.*, 829 F.3d at 1376. Even if individual modifications or choices were obvious, a petition must explain why making all of the changes at once would be obvious. *Apple Inc. v. Contentguard*, Paper 9 at 16-17 ("[T]he mere fact that individual changes might have been obvious does not make doing all of the changes at once obvious.").

The Federal Circuit has found that, even for an obviousness challenge based on a single reference in view of the knowledge and skill of a POSITA, there must be a motivation to make the combination and a reasonable expectation that such a combination would be successful, otherwise a skilled artisan would not arrive at the claimed combination. *In re Stepan Co.*, 868 F.3d 1342, 1345-46 (Fed. Cir. 2017). In other words, when a gap in a single prior art reference requires filling with, for example, the knowledge of one of ordinary skill, there must be a further showing that the skilled artisan would have arrived at the claimed invention.

The lack of a technological obstacle to combining references, in and of itself, does not justify a finding of obviousness. *See In re Omeprazole Patent Litig. v. Apotex Corp.*, 536 F.3d 1361, 1380-81 (Fed. Cir. 2008). A reason for combining disparate prior art references is critical and should be made explicit. *InTouch Techs., Inc. v. VGo Communs., Inc.*, 751 F.3d 1327, 1351 (Fed. Cir. 2014) (internal citation omitted).

Hindsight analysis is inappropriate. Obviousness must be measured "*at the time the invention was made*." *Ortho-McNeil Pharm. v. Mylan Labs*, 520 F.3d 1358, 1364 (Fed. Cir. 2008) (emphasis in original). A petition must demonstrate a rationale to combine prior art references without relying on the patent disclosure itself. *Apple Inc. v. Contentguard*, Paper 9 at 15, 17; *see also P&G v. Teva Pharms. USA, Inc.*, 566 F.3d 989, 995 (Fed. Cir. 2009). The Petitioner must not use the patent as a roadmap. *In re NTP, Inc.*, 654 F.3d 1279, 1299 (Fed. Cir. 2011) (internal citation omitted); *see also KSR Int'l Co. v. Teleflex Inc.*, 550 U.S. 398, 421 (2007).

III. THE '565 PATENT

The '565 patent generally relates to an engine torque controller for spark ignition internal combustion engine and more specifically for direct injection engines. (Ex. 1001 at Abstract.)

The '565 patent addresses the problem which occurs in stratified mode or homogenous mode where there is a steady state error between the torque demanded and the estimate of the torque produced. (Ex. 1001 at 1:46-49.) This problem is overcome by producing a difference signal that represents the difference between a desired torque signal and a signal representing an estimate of the current torque and high-pass filtering the difference signal to eliminate low

frequency components, among other things. Figure 3 describes a block diagram of a torque producer, in accordance with the '565 patent:

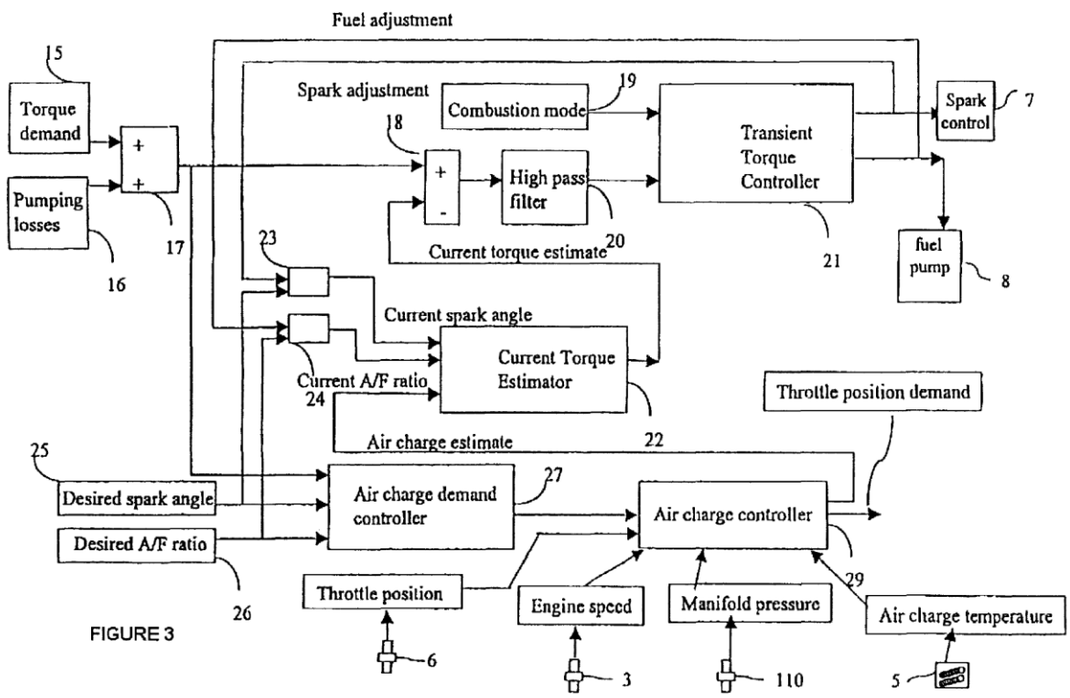

FIGURE 3

he air charge demand controller 27 generates an air charge demand signal that is received by an air charge controller 29. The air charge controller 29 also receives as inputs a signal indicating throttle position that is received from the throttle position indicator 6 (FIG. 1), and signals from the engine speed sensor 3, the manifold absolute pressure sensor 110 and the air charge temperature meter 5. The air charge controller 29 generates a signal indicating desired throttle position that is sent to throttle 9 (FIG. 1) and a signal representing an estimate of the air charge.

The estimated air charge may be different from the air charge demanded by the air charge demand controller 27 due to delays in the engine 100, such as the time taken for the throttle 9 to move, the time taken for the pressure in the air intake manifold 152 to rise or fall, or any errors in position of the

> throttle. The air charge estimate signal is sent to a current torque estimator 22.
>
> The estimate of the current torque is compared to the desired torque signal by a comparator 18 to generate an error signal 35 which is then filtered by a high pass filter 20. The resulting high-pass filtered error signal is used by a transient torque controller 21 to generate a control signal for temporarily adjusting the torque produced by the engine 100.
>
> A combustion mode signal 19 indicates whether the engine 100 is operating in a stratified mode or in a homogenous mode. If the engine 100 is operating in the stratified mode then a fuel adjustment signal is generated and sent to the fuel pump 8 in order to adjust the amount of fuel which is injected into the combustion chamber 108 by the fuel injector 130. If the engine 100 is operating in the homogenous mode then a spark adjustment signal is generated and sent to the spark control unit 7 to adjust the timing of the ignition spark generated by the spark plug 106.
>
> A signal representing the current spark angle is calculated by a calculator 23 using the desired spark angle and the spark adjustment signal received from the transient torque controller 21. A signal representing the current air/fuel ratio is calculated by a calculator 24 using the desired air/fuel ratio and the fuel adjustment signal received from the transient torque controller 21. When the engine 100 is operating in stratified mode the current spark angle will be equal to the desired spark angle 25. When the engine 100 is operating in homogenous mode the current air/fuel ratio will be equal to the desired air/fuel ratio 26.

(Ex. 1001 at 3:6-60)

The basic inventive concept disclosed and claimed in the subject '565 patent is, in the context of a spark ignition direct injection internal combustion engine, a method in which engine torque is controlled dependent upon a high-pass filtered difference signal representative of the difference between desired torque and current torque estimate signals. (Ex. 2001 at ¶ 20.)

The method and system of the '565 patent utilizes a torque demand signal which constitutes a feedforward signal and a current torque estimate signal which constitutes a feedback signal. (*Id*. at ¶ 21.) These two signals are applied as inputs to a comparator 18 that generates an error signal or difference signal representative of the difference between the two inputs to the comparator. (*Id*.) The error or difference signal is generated by subtracting the current torque estimate from the torque demand signal. (*Id*.) This error signal indicates instances where torque demand is less than torque produced and instances where torque demand is greater than torque produced. (*Id*.) The high-pass filter receives the error signal and blocks (filters out) smaller differences from the comparator and only allows larger differences to pass through to the transient torque controller. Indeed, the '565 invention does not expend energy with smaller, less significant errors by only acting upon larger errors. (*Id*.) This design minimizes hunting, where the system is continuously chasing changes back and forth. (*Id*.)

A high-pass filter is used to filter the difference signal of desired torque and current torque estimate signals and it is this high-pass filtering of the difference of these two signals that makes the '565 patent unique. It is the high-pass filtered difference signal that controls engine torque. (*Id*. at 22.)

The '565 patent discloses what was well known in the prior art, namely, that "[i]n engine torque controllers for DISI engines, when the engine is operated in

stratified mode, spark angle has little influence on the torque produced. (*Id*. at 23.) The torque producer modifies the air/fuel in order to control the torque produced. (*Id*.) Conversely, when the engine is operating in homogenous mode… [t]he torque producer modifies the timing of the spark ignition in order to control the torque produce." (Ex. 1001 at 1:36-45; (*Id*. at 23.) This disclosure constitutes the "admitted prior art" of the '565 patent.

The main difference between the prior art and the '565 patent is the method of correction for a steady state error by high-pass filtering the difference between the torque demanded signal and the estimate of the torque produced signal. (*Id*. at 24.)

A. Challenged Claims

Petitioner challenges claims 1-7 of the '565 patent.

Independent claim 1 recites:

> 1. A device for controlling a torque output of an engine, the device comprising:
>
> a torque demand controller for generating a torque demand signal; and a torque producer which receives the torque demand signal, the torque producer includes:
>
> an estimator which receives as inputs a current spark angle signal, a current air/fuel ratio signal and an estimated air charge signal and outputs an estimated torque signal;
>
> a comparator which receives as inputs the estimated torque signal and a desired torque signal and outputs a difference signal;

> a high pass filter which receives as an input the difference signal and outputs a filtered difference signal in which low frequency components are absent; and
>
> a transient torque controller which receives as an input the filtered difference signal and outputs a fuel adjustment signal and a spark adjustment signal.

Dependent claims 2-6 recite additional features. (Ex. 1001 at 4:1-4:52.)

Independent claim 7 recites:

> 7. A method for controlling a torque output of an engine, the method comprising:
>
> estimating a current torque signal from a received current spark angle signal, a received current air/fuel ratio signal and a received estimated air charge signal;
>
> comparing the estimated current torque signal with a desired torque signal to output a difference signal;
>
> filtering out a plurality of low frequency components from the difference signal; and
>
> controlling a fuel adjustment signal and a spark adjustment signal in dependence upon a filtered difference signal.

(Ex. 1001 at 4:53-1:65.)

B. Person of Ordinary Skill in the Art

The level of ordinary skill in the art applicable to the '565 patent around the time of the invention in 2001 is a person with (1) a B.S. in mechanical engineering or a closely related field with three or more years of experience in either engine

systems or engine control systems or (2) at least a M.S. in mechanical engineering. (Ex. 2001 at ¶ 14.)

IV. CLAIM CONSTRUCTION

In an *inter partes* review proceeding, "a claim of a patent . . . shall be construed using the same claim construction standard that would be used to construe the claim in a civil action under 35 U.S.C. § 282(b), including construing the claim in accordance with the ordinary and customary meaning of such claim as understood by one of ordinary skill in the art and the prosecution history pertaining to the patent." 37 C.F.R. § 42.100(b).

None of the claim terms require specific construction and should receive their plain and ordinary meaning, in the context of the '565 patent specification.

Patent owner reserves the right to construe other terms of the '565 patent throughout this proceeding, if the petition is granted, and in pending district court litigation pending against Petitioner and its parent company.

V. OVERVIEW OF CITED PRIOR ART

Cited References

U.S. Patent No. 6,006,717, Suzuki *et al*., titled "Direct-Injection Spark-Ignition Type Engine Control Apparatus," issued December 28, 1999 ("*Suzuki*").

U.S. Patent No. 5,241,855, Cullen *et al*., titled "Method and Apparatus for Inferring Engine Torque," issued September 7, 1993 ("*Cullen*").

U.S. Patent No. 6,07,68, Scherer *et al*., titled "Process and Apparatus for Adjusting the Torque of an Internal-Combustion Engine," issued April 11, 2000 ("*Scherer*").

U.S. Patent No. 5,282,449, Takahashi *et al*., titled "Method and System for Engine Control," issued February 1, 1994 ("*Takahashi*").

A. Suzuki

Suzuki discloses a method of torque control of a direct injection spark ignition engine. (Ex. 1005 at 1:39-64.) The torque control method covers the engine combustion operation of both stratified and homogeneous modes. (*Id*.) Torque correction is realized by controlling spark timing in homogeneous combustion operation and air/fuel ratio during stratified combustion operation. (*Id*.)

Like *Suzuki*, the '565 patent discloses what was well known in the prior art that "[i]n engine torque controllers for DISI engines, when the engine is operated in stratified mode, spark angle has little influence on the torque produced. The torque producer modifies the air/fuel in order to control the torque produced. Conversely, when the engine is operating in homogenous mode… [t]he torque producer modifies the timing of the spark ignition in order to control the torque

produce." (Ex. 1001 at 1:36-45.) Thus, *Suzuki* is merely cumulative of the admitted prior art of the '565 patent.

Suzuki does not disclose of the usage of a high-pass filter. (Ex. 2001 at ¶¶ 28-29.) In the Petition, it is admitted that "Suzuki does not expressly disclose using a high-pass filter to receive the torque difference signal as an input and to output a filtered difference signal in which low frequency components are removed." (Paper 2 at 33.) The Petitioner goes on to assert that "[b]ut Suzuki's spark and fuel correction factor curves in Figures 12-15 suggest that a high-pass filter is, in fact, being used. To a POSA, the shape of these curves suggests that the torque correction demand signal is filtered with a high-pass filter." (*Id*.) This assertion is not supported by what was known in the field of the art at the time of the invention, as clearly demonstrated below. (Ex. 2001 at ¶ 27.)

Actually, a POSA would know that in homogeneous mode, air/fuel ratio manipulation has a much less correcting effect when compared to spark timing. (*Id*.) A fatal flaw of *Suzuki* is the lack of disclosure of the usage of a high-pass filter. (*Id*. at 28.) In the Petition, it is admitted that "Suzuki does not expressly disclose using a high-pass filter to receive the torque difference signal as an input and to output a filtered difference signal in which low frequency components are removed." (Paper 2 at 33).

Petitioner's characterization of *Suzuki* does not track what is actually disclosed in the reference. (Ex. 2001 at ¶¶ 30-34.) *Suzuki's* Figure 12 represents the lowering of torque during a gear shift, where torque is momentarily reduced, then ramped back up after the shift. (*Id*. at ¶ 31; Ex. 1005 at Fig. 12) *Suzuki* does not disclose that the signals represented in Figure 12 utilize a high-pass filter. (Ex. 2001 at ¶ 31.)

Suzuki's Figure 13 shows the effects of the air conditioning compressor cycling on and off. (*Id*. at ¶ 33; Ex, 1005 at Fig. 13.) When the air conditioning compressor turns on, it increases the torque load on the engine, slowing it down. (*Id*.) The system response for homogeneous combustion is to initially increase spark advance, which quickly increases torque output. (Ex. 2001 at ¶ 33.) After the initial spike in spark advance, spark timing is gradually retarded while at the same time, air flow rate is increased. (*Id*.) The different response occurs when the air conditioning compressor turns on while operating in stratified combustion mode. (*Id*.) The equivalence ratio is spiked rich, to quickly compensate for the increased torque requirement of the air conditioning compressor. (*Id*.) After the initial rich spike of equivalence ratio, it is gradually reduced while at the same time air flow rate is gradually increased. (*Id*.) *Suzuki* does not disclose that the signals represented in Figure 13 utilize a high-pass filter. (*Id*.)

Suzuki's Figure 14 shows the response for both homogeneous and stratified combustion for a torque correction demand in the presence of a fuel cut. (Ex. 1005 at 10:13-20.) For homogeneous operation, the spark timing shifts to retarded and the equivalence ratio also shifts lean, then spark timing is gradually advanced while at the same time, the equivalence ratio is gradually increased to rich. (Ex. 2001 at ¶ 33.) For stratified combustion operation, the equivalence ratio shifts lean and is gradually increased, but the spark timing correction factor is left unchanged. (*Id*.) *Suzuki* does not disclose that the signals represented in Figure 14 utilize a high-pass filter. (*Id*.)

Suzuki's Figure 15 shows a fourth embodiment with a torque correction demand for a torque reduction during a gear shift operation. (Ex. 1005 at Fig,15.) Again, both homogeneous and stratified combustion operations are shown. (*Id*. at 11:22-32.) During homogeneous combustion operation, air flow rate is decreased, but since the response is slow, torque is quickly reduced by retarding the spark timing correction factor along with making the equivalence ratio leaner. (Ex. 2001 at ¶ 34.) Air flow gradually decreases, while the spark timing correction factor is advanced and equivalence ratio is made richer. (*Id*.) For stratified combustion operation, the equivalence ratio is spiked lean. (*Id*.) As the air flow rate decreases gradually, the equivalence ratio is increased rich. (*Id*.) The spark timing

correction factor is not changed. (*Id*.) *Suzuki* does not disclose that the signals represented in Figure 15 utilize a high pass filter. (*Id*.)

Clearly, *Suzuki* does not disclose the use of a high-pass filter, and, for this and other reasons set forth hereinbelow, a POSA would not have been motivated to consider it alone or combine it with *Cullen* or *Scherer* to arrive at the claimed invention of the challenged claims of the '565 patent. (*Id*. at ¶ 35.)

B. Cullen

Cullen, one of the secondary references relied upon by the Petitioner, discloses a method of control for an automatic transmission that relies on predicting the torque produced by the engine, which is coupled to the transmission. (Ex. 1006 at 2:32-43; 3:18-68.)

The accuracy of the calculation for engine torque prediction is made more robust by including factors in the calculation that affect torque such as: air conditioning operation, power steering operation, cold engine friction, green (new) engine friction, non-gasoline fuel usage and cylinder deactivation. (Ex. 2001 at ¶ 38.) While *Cullen* may be a good method for controlling a transmission, the disclosure of engine torque prediction in *Cullen* does not address the special considerations required for controlling torque during stratified combustion engine operation nor does *Cullen* disclose the use of a high pass filter. (*Id*. at ¶ 39.) Both

of these missing features of *Cullen* are required elements of the challenged claims of the '565 patent. (*Id*.)

C. Scherer

Scherer is directed to a system and method for controlling engine torque by regulating the ignition point and air flow rate on an Otto (gasoline) engine, or by regulating the start and duration of fuel injection in a diesel engine. (*Id*. at ¶ 41.) *Scherer* claims to improve adjustment of engine torque to a desired value with minimal deviations in both steady-state (quasi-static) and transient (dynamic) operation, with a claimed shorter reaction time. (*Id*.)

One major shortcoming of *Scherer* is that there is no consideration of a stratified charge operation mode for a DISI engine as the '565 patent teaches and the challenged claims of the '565 patent require, and *Scherer* teaches diesel engine control, which the '565 does not teach or claim. (*Id*. at ¶ 42.) Thus, for at least these two reasons, *Scherer* "teaches away" from the challenged claims of the '565 patent. (*Id*.) A second major shortcoming of *Scherer* is that it only filters a desired engine torque signal, which is an input to a comparator, and does not high-pass filter "the difference signal," which is the output of a comparator (Ex. 2001 at ¶¶ 40-49.)

Scherer does disclose homogeneous operation of a spark ignition engine but fails to consider the stratified charge operation of a DISI engine. (*Id*. at ¶ 44.)

Another fundamental flaw of *Scherer* is that even though there is a high-pass filter disclosed, it is not employed in the unique manner of the teachings and challenged claims of the '565 patent. (*Id*. at ¶ 45.) *Scherer* uses the high-pass filter with an adjustable decay time constant (t), which is a function of engine speed and load, to generate a filtered dynamic desired torque (M_d) signal. (*Id*. at ¶ 55; Ex. 1007 at 4:31-4; Fig. 1.) *Scherer* thus only filters a desired engine torque signal, which is an input to a comparator, and does not high-pass filter "the difference signal," which is the output of a comparator. (Ex. 2001 at ¶¶ 40-49.)

In the '565 patent, a "current torque estimator 22 uses the air charge estimate signal, together with a signal representing the current spark angle and a signal representing the current air/fuel ratio to generate a signal representing an estimate of current torque." (*Id*. at ¶ 46; Ex. 1001 at 3:29-39.) It is this signal, "[t]he estimate of the current torque, [which] is compared to the desired torque signal by a comparator 18 to generate an error signal, which is then filtered by the high pass filter 20." (Ex. 2001 at ¶ 47.) This is markedly different and patentably distinct from what *Scherer* teaches. (*Id*. at ¶ 48.) Again, *Scherer* is prior art of record, and should not be considered under 35 U.S.C. § 325(d).

For at least the above-stated reasons, a POSA would not consider combining *Scherer* with any one or more of the other/secondary prior art references relied

upon by Petitioner, because they teach away from each other and teach away from the challenged claims of the '565 patent. (*Id*. at ¶ 49.)

D. Takahashi

Takahashi discloses controlling the throttle valve and fuel injection in a manner that ensures the engine output torque and air/fuel ratio match target values. (Ex. 2001 at ¶ 50.) *Takahashi* employs a method that calculates target air mass flow rate as the air mass flow rate at the inlet port which achieves target torque. (*Id*.) The target torque is used to control the fuel injection and electronic throttle control. (*Id*.)

Takahashi is only concerned with the operation of a homogeneous combustion method. (*Id*. at ¶ 51.) *Takahashi* does not disclose spark timing control nor does it teach a DISI engine that operates in a stratified combustion mode. (*Id*.) Figure 1 of *Takahashi* discloses a port fuel injection engine, not a direct injection spark ignition engine (DISI) (*Id*.; Ex. 1008 at Fig. 1.) *Takahashi* is irrelevant to the challenged claims of the '565 patent.

VI. THE PETITION SHOULD BE REJECTED UNDER § 314(A) BECAUSE PETITIONER IS UNLIKELY TO PREVAIL WITH RESPECT TO ANY CHALLENGED CLAIM

The Board should decline review under 35 U.S.C. § 314(a) because, as set forth in more detail below, there is no likelihood that Petitioner will prevail with respect to any challenged claim.

A POSA would not consider combining *Scherer* with *Suzuki* or any other prior art reference relied upon by Petitioner because the references teach away from each other and the '565 patent as shown below. (Ex. 2001 at ¶ 52.) *Suzuki* does not disclose using a high-pass filter period and the Petitioner admits this to be true. (Paper 2 at 33.) Even if *Suzuki* did use a high-pass filter as implied by the Petitioner, which as clearly demonstrated above it does not, *Suzuki* would only high-pass filter the "torque correction demand signal" and not high-pass filtering of the "difference signal," as is required by the challenged claims of the '565 patent. (*Id*. at ¶ 53.)

Scherer does not consider a stratified charge operation mode for a DISI engine as the '565 patent teaches and claims and *Scherer* teaches diesel engine control, which the '565 does not teach or even reference. *See* Ex. 1001; Ex. 2001At ¶ 54. Thus, *Scherer* "teaches away" from the challenged claims of the '565 patent with technology relating to diesel engines which is irrelevant to the unique operational characteristics of a stratified mode of operation of a Direct Injection Spark Ignition (DISI) engine. (Ex. 2001 at ¶ 54.)

Scherer does disclose homogeneous operation of a spark ignition engine, but fails to consider the stratified charge operation of a DISI engine. (*Id*. at 56.)

Another fundamental flaw of *Scherer* is that even though there is a high-pass filter disclosed, it is not employed in the unique manner of the teachings and

challenged claims of the '565 patent. (*Id*. at 57.) *Scherer* uses the high-pass filter with an adjustable decay time constant (*t*), which is a function of engine speed and load, to generate the filtered output of dynamic desired torque (M_d). (Ex. 1007 at 4:31-45; Fig. 1.) In the '565 patent, a "current torque estimator 22 uses the air charge estimate signal, together with a signal representing the current spark angle and a signal representing the current air/fuel ratio to generate a signal representing an estimate of current torque." (Ex. 1001at 3:29-39.) It is this signal, "[t]he estimate of the current torque, [which] is compared to the desired torque signal by a comparator 18 to generate an error signal, which is then filtered by the high pass filter 20." (*Id*.; Ex. 2001 at ¶ 59.)

The '565 patent teaches, and its claims recites, a markedly different approach, divorced from what *Scherer* discloses. (*Id*. at ¶ 60.) *Scherer* only filters a desired engine torque signal, which is an input to a comparator, and does not high-pass filter "the difference signal," which is the output of a comparator, as the challenged claims of the '565 patent require. (Ex. 2001 at ¶¶ 30-39.) Again, *Scherer* is prior art of record, and should not be considered under 35 U.S.C. § 325(d).

For the foregoing reasons, a POSA would not consider combining *Scherer* with any one or more of the secondary prior art references relied upon by Petitioner because they teach away from each other and the challenged claims of

the '565 patent. (*Id*. at ¶ 61.) Combining the teachings of *Scherer* and those of any one or more of the secondary prior art references relied upon by Petitioner, even in hindsight, would result in a desired engine torque signal which is high-pass filtered, and a "difference signal" which is not high-pass filtered. (*Id*. at ¶¶ 47-55.) Petitioner's 97 page Petition makes a valiant effort to camouflage these fundamental deficiencies of the prior art but falls well short of the mark.

VII. CONCLUSION

For the foregoing reasons, the Petition to institute *inter partes* review of any claim of the '565 patent should be denied.

Dated: May 7, 2020

Respectfully submitted,

/s/ *Timothy Devlin*

Timothy Devlin
Registration No. 41,706
DEVLIN LAW FIRM LLC
1526 Gilpin Avenue
Wilmington, DE 19806
(302)-449-9010
TD-PTAB@devlinlawfirm.com
Attorney for Patent Owner

CERTIFICATE OF WORD COUNT

Pursuant to 37 C.F.R. § 42.24(d), the undersigned certifies that there are 5,417 words in this paper, excluding any table of contents, table of authorities, mandatory notices under 37 C.F.R. § 42.8, certificate of word count, certificate of service, or appendix of exhibits. This certification relies on the word count of the word-processing system used to prepare this paper.

Respectfully submitted,

/s/ *Timothy Devlin*

Timothy Devlin
Registration No. 41,706
DEVLIN LAW FIRM LLC
1526 Gilpin Avenue
Wilmington, DE 19806
(302)-449-9010
TD-PTAB@devlinlawfirm.com
Attorney for Patent Owner

CERTIFICATE OF SERVICE

I hereby certify that on May 7, 2020, I caused a true and correct copy of the foregoing materials to be served via the Patent Office electronic filing system, and electronic service via email to the following attorneys of record pursuant to Petitioner's consent.

LEAD COUNSEL	**BACKUP COUNSEL**
Michael D. Specht mspecht-PTAB@sternekessler.com STERNE, KESSLER, GOLDSTEIN & FOX P.L.L.C. 1100 New York Avenue, N.W. Washington, DC 20005 (202) 371-2600	Jason A. Fitzsimmons, Reg. No. 65,367 jfitzsimmons-PTAB@sternekessler.com Danny E. Yonan, Reg. No. 53,812 dyonan-PTAB@sternekessler.com Kyle Conklin, Reg. No. 59,425 dyonan-PTAB@sternekessler.com John D. Higgins, Reg. No. 74,992 jhiggins-PTAB@sternekessler.com STERNE, KESSLER, GOLDSTEIN & FOX P.L.L.C. 1100 New York Avenue, N.W. Washington, D.C. 20005 Tel.: 202-371-2600 Fax: 202-371-2540

Respectfully submitted,

/s/ *Timothy Devlin*
Timothy Devlin
Registration No. 41,706
DEVLIN LAW FIRM LLC
1526 Gilpin Ave.
Wilmington, DE 19806
(302)-449-9010
TD-PTAB@devlinlawfirm.com
Attorney for Patent Owner

UNITED STATES PATENT AND TRADEMARK OFFICE

BEFORE THE PATENT TRIAL AND APPEAL BOARD

Volkswagen Group of America, Inc.,
Petitioner

v.

Michigan Motor Technologies LLC,
Patent Owner

Case IPR2020-00444
Patent No. 6,581,565

DECLARATION OF DR. RUSSELL LEONARD

MMT 2001

TABLE OF CONTENTS

I. Introduction ***1***

II. Background ***1***

III. Level of ordinary skill in the art ***4***

IV. Understanding of the law ***4***

a. Claim construction 4

b. Obviousness 5

V. Overview of the '565 patent ***6***

VI. Overview of the prior art ***7***

a. Suzuki 7

b. Cullen 11

c. Scherer 11

d. Takahashi 13

VII. No motivation to combine The primary references ***14***

VIII. Availability for Cross-examination ***16***

IX. Right to supplement ***16***

X. Jurat.....*16*

1. I, Dr. Russell Leonard, declare as follows:

I. INTRODUCTION

2. I have been retained as an expert in this proceeding by counsel for Michigan Motor Technologies (MMT). I have been asked for my expert conclusions.

II. BACKGROUND

3. I obtained my Bachelor's degree in Industrial Arts Education with an automotive emphasis from Central Michigan University in 1991. Next, I earned a Master of Education from Wayne State University in 1997, and a Ph.D. in Higher Educational Leadership from Western Michigan University in 2016.

4. I am currently a Professor at Ferris State University in the Automotive Department of the School of Automotive and Heavy Equipment where I teach in both the Automotive Engineering Technology and Automotive Service programs.

5. I began my automotive career working as a mechanic on civilian automobiles and military vehicles. After transitioning to building prototype vehicles at Roush, I started a new position as a contractor to Ford Motor Company teaching engineers on the topic of Ford powertrain electronic controls. I learned an incredible amount of detail that augmented my technician viewpoint with an

understanding from a design and manufacturing perspective. While earning my master's degree, a classmate suggested that I should apply to Hughes Aircraft.

6. At Hughes, I worked as a Systems Engineer designing and developing training for General Motors. The last assignment I performed at Hughes Aircraft was integrating advanced military technologies with civilian applications. It was during this project with Hughes that I was encouraged to apply for a position at General Motors as a Service Engineer for Cadillac.

7. While at Cadillac, I assisted field technicians with repairs over the phone, tracked trends and created engineering bulletins and campaigns as required. The next position in my General Motors career was a release engineer of diagnostic scan tool software after an internal transfer. In this position, I wrote code for the Tech 2 scan tool to request and receive data from various computer control modules for numerous GM vehicles to not only comply with OBD II, but to be a useful tool to the repair technician.

8. After the September 11th terrorist attack, I decided to share my experiences and enjoyment of automobiles with future generations, so I became an automotive professor at Ferris State University. I earned my Ph.D. during this time while teaching many automotive subjects in the automotive service program for technicians and in the automotive engineering technology program for engineering technologists.

9. I am a continuing member of multiple professional organizations, including SAE International, where I am the faculty advisor at Ferris State University for the student chapter of the collegiate design series, Baja SAE. At ASTM International, I am a voting member of Committee D02 on Petroleum Products, Liquid Fuels, and Lubricants, and Committee D15 on Engine Coolants and Related Fluids. Additionally, I am a task group member of four work items within D15.

10. My career thus far includes 17 years teaching automotive engineering technology and servicing at a university, 7 years as an engineer for major automotive and technology corporations, 3 years as a trainer of powertrain electronic controls for an automobile manufacturer, 19 years of service in the United States military, 7 years of which I was a mechanic, and 4 years as a civilian automobile mechanic.

11. A copy of my curriculum vitae is attached as Appendix A, which contains further details regarding my experience, education, and other qualifications to render an expert opinion in connection with this proceeding.

12. I am being compensated at my normal consulting rate of $240/hour for my work, but my opinions are based on my own views of the patented technology and the prior art. My compensation is not dependent on the outcome of

this proceeding and in no way influences the substance of my statements in this declaration.

13. I have no financial interests in the patent owner. Similarly, I have no financial interest in the '565 patent.

III. LEVEL OF ORDINARY SKILL IN THE ART

14. The level of ordinary skill in the art applicable to the '565 patent around the time of the invention in 2002 is a person with (1) a B.S. in mechanical engineering or a closely related field with three or more years of experience in either engine systems or engine control systems or (2) at least a M.S. in mechanical engineering.

IV. UNDERSTANDING OF THE LAW

15. I am not an attorney. For the purposes of this declaration, the patent owner's counsel has informed me about certain aspects of the law that are relevant to my opinions. I have applied those legal principles in arriving at my conclusions expressed in this Declaration.

a. Claim construction

16. I understand that "a claim of a patent . . . shall be construed using the same claim construction standard that would be used to construe the claim including construing the claim in accordance with the ordinary and customary

meaning of such claim as understood by one of ordinary skill in the art and the prosecution history pertaining to the patent."

17. I understand that claim terms that are not construed by the Board should be given their ordinary and customary meaning as would have been understood by a person of ordinary skill in the art at the time of the claimed invention.

18. I also understand that a "means-plus-function" claim term is a term that recites a certain function but does not recite sufficient structure for performing that function. I understand that means-plus-function terms are limited to the function recited in the claim term and the specific structure that is disclosed in the patent's specification for performing that function and structures that are equivalent to the disclosed structures. Thus, I have been informed and understand that construing a means-plus-function claim term is a two-step process. First, the claimed function of the term must be identified. Second, the structure or structures described in the specification for performing that function must be identified.

b. Obviousness

19. I also understand that a showing of obviousness must include demonstrating that the cited references disclose each element of a challenged claim.

V. OVERVIEW OF THE '565 PATENT

20. The basic inventive concept disclosed and claimed in the subject '565 patent is to, in the controlling of engine torque of a spark ignition direct injection internal combustion engine, teach a method in which torque is controlled dependent upon a filtered difference signal of desired torque and current torque estimate signals.

21. A high pass filter is used to filter the difference signal of desired torque and current torque estimate signals and it is this high pass filtering of the difference of two signals that makes the '565 patent unique. It is the filtered difference signal that controls engine torque.

22. The '565 patent discloses what was well known in the prior art that "[i]n engine torque controllers for DISI engines, when the engine is operated in stratified mode, spark angle has little influence on the torque produced. The torque producer modifies the air/fuel in order to control the torque produced. Conversely, when the engine is operating in homogenous mode… [t]he torque producer modifies the timing of the spark ignition in order to control the torque produce." (EX 1001, '565 at 1:36-45.)

23. The main difference between the prior art and the '565 patent is the method of correction for a steady state error by using a high pass filtered output of

the difference of the torque demanded signal and the estimate of the torque produced signal.

24. A better description of the uniqueness of the '565 patent's method is to say that the torque demand signal represents a feedforward signal and that the torque produced signal represents a feedback signal. These two signals are run through a comparator 18 that generates an error signal. The error signal is generated by subtracting the current torque estimate from the torque demand signal. EX 1001 at 3:34-39 and Figure 3. This error signal indicates instances where torque demand is less than torque produced and instances where torque demand is greater than torque produced. The high pass filter receives the error signal and blocks (filters out) smaller differences from the comparator 18 and only allows larger differences to pass through to the transient torque controller. Indeed, the '565 invention does not expend energy with smaller, less significant errors by only acting upon larger errors. This design minimizes hunting, where the system is continuously chasing changes back and forth.

VI. OVERVIEW OF THE PRIOR ART

a. Suzuki

25. The Suzuki invention discloses a method of torque control of a direct injection spark ignition engine. The torque control method covers the engine combustion operation of both stratified and homogeneous modes. Torque

correction is realized by controlling at minimum, spark timing for torque correction in homogeneous combustion and air/fuel ratio during stratified combustion operation. Suzuki is a simple solution to engine torque control at the time of invention.

26. Like Suzuki, the '565 patent discloses what was well known in the prior art that "[i]n engine torque controllers for DISI engines, when the engine is operated in stratified mode, spark angle has little influence on the torque produced. The torque producer modifies the air/fuel in order to control the torque produced. Conversely, when the engine is operating in homogenous mode… [t]he torque producer modifies the timing of the spark ignition in order to control the torque produce." (EX 1001, '565 at 1:36-45.)

27. In addition, a POSA would know that in homogeneous mode, air/fuel ratio manipulation has a much less correcting affect when compared to spark timing. Again, Suzuki reiterates what was already known at the time of the '565 invention.

28. The fatal flaw of Suzuki is the lack of disclosure of the usage of a high pass filter. In the Petition, it is admitted that "Suzuki does not expressly disclose using a high-pass filter to receive the torque difference signal as an input and to output a filtered difference signal in which low frequency components are removed." (Paper No. 1 at 33).

29. The Petitioner goes on to assert that "[b]ut Suzuki's spark and fuel correction factor curves in Figures 12-15 suggest that a high-pass filter is, in fact, being used. Id. To a POSA, the shape of these curves suggests that the torque correction demand signal is filtered with a high-pass filter." (Paper No. 1 at 33).

30. In review of Figures 12-15 of Suzuki, I state the following:

31. Figure 12 represents the lowering of torque during a gear shift, where torque is momentarily reduced, the ramped back up after the shift. Suzuki does not disclose that the signals represented in Figure 12 utilize a high pass filter.

32. Figure 13 shows the effects of the air conditioning compressor cycling on and off. When the air conditioning compressor turns on, it increases the torque load on the engine, slowing it down. The system response for homogeneous combustion is to initially increase spark advance, which quickly increases torque output. After the initial spike in spark advance, spark timing is gradually retarded while at the same time, air flow rate is increased. The different response occurs when the air conditioning compressor turns on while operating in stratified combustion mode. The equivalence ratio is spiked rich, to quickly compensate for the increased torque requirement of the air conditioning compressor. After the initial rich spike of equivalence ratio, it is gradually reduced while at the same time air flow rate is gradually increased. Suzuki does not disclose that the signals represented in Figure 13 utilize a high pass filter.

33. Figure 14 shows the response for both homogeneous and stratified combustion for a torque correction demand in the presence of a fuel cut EX 1005 at 10:13-20. For homogeneous operation, the spark timing shifts to retarded and the equivalence ratio also shifts lean, then spark timing is gradually advanced while at the same time, equivalence ratio is gradually increased to rich. For stratified combustion operation, equivalence ratio shifts lean and is gradually increased, but the spark timing correction factor is left unchanged. Suzuki does not disclose that the signals represented in Figure 14 utilize a high pass filter.

34. Figure 15 shows a fourth embodiment with a torque correction demand for a torque reduction during a gear shift operation. Again, both homogeneous and stratified combustion operation are shown. EX 1005 at 11:22-32. During homogeneous combustion operation, air flow rate is decreased, but since the response is slow, torque is quickly reduced by retarding the spark timing correction factor along with leaning out the equivalence ratio. Air flow gradually decreases, while the spark timing correction factor is advanced and equivalence ratio is richened up. For Stratified combustion operation, equivalence ratio is spiked lean. As the air flow rate is decreasing gradually, the equivalence ratio is increased rich. The spark timing correction factor is not changed. Suzuki does not disclose that the signals represented in Figure 15 utilize a high pass filter.

35. Throughout the entire patent, Suzuki does not disclose the use of a high pass filter.

b. Cullen

36. Cullen, the secondary reference used by the Petitioner.

37. The Cullen invention is a method of control for an automatic transmission that relies on predicting the torque produced by the engine, which is coupled to the transmission.

38. The accuracy of the calculation for engine torque prediction is made more robust by including factors in the calculation that affect torque such as: air conditioning operation, power steering operation, cold engine friction, green (new) engine friction, non-gasoline fuel usage and cylinder deactivation.

39. While Cullen may be a good method for controlling a transmission. The disclosure of engine torque prediction in Cullen does not address the special considerations required for controlling torque during stratified combustion engine operation nor does Cullen disclose the use of a high pass filter. Both of these disclosures are important elements of the ‘565 patent.

c. Scherer

40. Scherer, the tertiary reference used by the Petitioner.

41. The primary scope of Scherer is directed to a system and method for controlling engine torque regulating the ignition point and air flow rate on an Otto

(gasoline) engine, or by regulating the start and duration of fuel injection in a diesel engine. The Scherer invention claims to improve adjustment of engine torque to a desired value with minimal deviations in both steady-state (quasi-static) and transient (dynamic) operation, with a claimed shorter reaction time.

42. The issues with Scherer are that there is no consideration of a stratified charge operation mode for a DISI engine as the '565 teaches and Scherer teaches diesel engine control, which the '565 does not teach. In this light, Scherer "teaches away" from the '565 patent with technology relating to diesel engines and not teaching to Direct Injection Spark Ignition (DISI) engine's unique operational characteristics.

43. A POSA would know that diesel engines operate differently than a spark ignition engine in that a diesel engine does not have spark plugs. A diesel engine relies upon the heat of compression to ignite the air/fuel mixture.

44. Scherer does disclose homogeneous operation of a spark ignition engine, but fails to consider the stratified charge operation of a DISI engine.

45. Another fundamental flaw of Scherer is that even though there is a high pass filter disclosed, it is not employed in the unique manner of the teachings of the '565. Scherer uses the high pass filter with an adjustable decay time constant (t), which is a function of engine speed and load to generate the filtered output of dynamic desired torque (M_d). EX 1007 at 4:31-45 and Figure 1.

46. In the '565 patent, a "current torque estimator 22 uses the air charge estimate signal, together with a signal representing the current spark angle and a signal representing the current air/fuel ratio to generate a signal representing an estimate of current torque." EX 1001at 3:29-39.

47. It is this signal, "[t]he estimate of the current torque, [which] is compared to the desired torque signal by a comparator 18 to generate an error signal, which is then filtered by the high pass filter 20."

48. Indeed, this is a markedly different approach in the '565 than what Scherer teaches.

49. For these reasons, I do not believe a POSA would consider combining Scherer with Suzuki or any other teaching because they teach away from each other and the '565 patent.

d. Takahashi

50. Takahashi is the fourth reference asserted by the petitioner. Takahashi controls the throttle valve and fuel injection in a manner that ensures the engine output torque and air/fuel ratio matches target values. It achieves this goal with a method that calculates target air mass flow rate as "the air mass flow rate at the inlet port which achieves target torque." The target torque is used to control the fuel injection and electronic throttle control.

51. Takahashi is only concerned with the operation of a homogeneous combustion method. Takahashi does not disclose spark timing control nor does it teach a DISI engine that operates in a stratified combustion mode. Figure 1 of Takahashi discloses a port fuel injection engine, not a direct injection spark ignition engine (DISI).

VII. NO MOTIVATION TO COMBINE THE PRIMARY REFERENCES

52. A POSA would not consider combining Scherer with Suzuki or any other teaching because they teach away from each other and the '565 patent as shown below.

53. Suzuki does not disclose using a high pass filter period and the Petitioner admits this to be true. (Paper No. 1 at 33). Let us suppose for a moment that Suzuki did use a high pass filter as implied by the petitioner. Accordingly, Suzuki would only high pass filter the "torque correction demand signal." That method, even if it were true, does not disclose a high pass filtering of the "difference signal."

54. The issues with Scherer are that there is no consideration of a stratified charge operation mode for a DISI engine as the '565 teaches and Scherer teaches diesel engine control, which the '565 does not teach. In this light, Scherer "teaches away" from the '565 patent with technology relating to diesel engines

and not teaching to Direct Injection Spark Ignition (DISI) engine's unique operational characteristics.

55. A POSA would know that diesel engines operate differently than a spark ignition engine in that a diesel engine does not have spark plugs. A diesel engine relies upon the heat of compression to ignite the air/fuel mixture.

56. Scherer does disclose homogeneous operation of a spark ignition engine, but fails to consider the stratified charge operation of a DISI engine.

57. Another fundamental flaw of Scherer is that even though there is a high pass filter disclosed, it is not employed in the unique manner of the teachings of the '565. Scherer uses the high pass filter with an adjustable decay time constant (t), which is a function of engine speed and load to generate the filtered output of dynamic desired torque (M_d). EX 1007 at 4:31-45 and Figure 1.

58. In the '565 patent, a "current torque estimator 22 uses the air charge estimate signal, together with a signal representing the current spark angle and a signal representing the current air/fuel ratio to generate a signal representing an estimate of current torque." EX 1001at 3:29-39.

59. It is this signal, "[t]he estimate of the current torque, [which] is compared to the desired torque signal by a comparator 18 to generate an error signal, which is then filtered by the high pass filter 20."

60. Indeed, this is a markedly different approach in the '565 than what Scherer teaches.

61. For these reasons, I do not believe a POSA would consider combining Scherer with Suzuki or any other teaching because they teach away from each other and the '565 patent.

VIII. AVAILABILITY FOR CROSS-EXAMINATION

62. In signing this declaration, I recognize that the declaration will be filed as evidence in a contested case before the Patent Trial and Appeal Board of the United States Patent and Trademark Office. I also recognize that I may be subject to cross examination in the case and that cross examination will take place within the United States. If cross examination is required of me, I will appear for cross examination within the United States during the time allotted for cross examination.

IX. RIGHT TO SUPPLEMENT

63. I reserve the right to supplement my opinions in the future to respond to any arguments that the Petitioner raises and to consider new information as it becomes available to me.

X. JURAT

64. I declare that all statements made herein of my own knowledge are true and that all statements made on information and belief are believed to be true;

and further that these statements were made with the knowledge that willful false statements and the like so made are punishable by fine or imprisonment, or both, under Section 1001 of Title 18 of the United States Code.

Dated: May 7, 2020

Dr. Russell Leonard

Appendix A

Russell A. Leonard, Jr., PhD

Work: 231-591-2357

E-mail: leonardr@ferris.edu

EDUCATION **Doctor of Philosophy, Higher Educational Leadership**, June 2016
Western Michigan University, Kalamazoo, Michigan

Master of Education, December 1997, magna cum laude
Wayne State University, Detroit, Michigan
Curriculum: Instructional Systems Design & Adult Education

Bachelor of Science in Secondary Education, June 1991
Central Michigan University, Mount Pleasant, Michigan
Major: K-12 Industrial Engineering & Technology Education, Automotive Focus

WORK EXPERIENCE: FERRIS STATE UNIVERSITY

August 2018 - Present **Professor, Ferris State University**. College of Engineering Technology, School of Automotive and Heavy Equipment
Currently instructing in both the Automotive Service and Automotive Engineering Technology programs

August 2017 - Present **Chair, University Curriculum Committee**.
This position oversees curriculum changes at the university level, creates, enforces and instructs on university policy, reports to the Academic Senate and works closely with the Academic Affairs office and faculty

August 2015 - Present **Faculty Advisor, SAE Baja Racing Club**.
SAE Baja is a student led team that designs, builds, tests and races an off-road buggy. The team competes against other universities from around the world

August 2008 - August 2018 **Associate Professor, Ferris State University**. College of Engineering Technology,
School of Automotive and Heavy Equipment
Instructed in both the Automotive Service and Automotive Engineering Technology programs

August 2008 - **Motorcycle Safety Foundation (MSF) Ridercoach**.

PETITIONER'S EXHIBIT 1002
US PATENT NO. 6,581,565

Corporate and Professional
August 2015 Development Center
Instructed the Basic Rider Course for the Motorcycle Safety Foundation Program

August 2010 - **Coordinator, Automotive Engineering Technology Program, Ferris State University**.
August 2012 College of Engineering Technology, School of Automotive and Heavy Equipment
Part-time administrator with teaching duties for the Automotive Engineering Technology program

August 2002 - **Assistant Professor, Ferris State University**. College of Technology, Automotive August 2008 Department
Instructed in both the Automotive Service and Automotive Engineering Technology programs

WORK EXPERIENCE: GENERAL MOTORS

June 1998 - **Release Engineer**, Service Operations
August 2002 Developed and validated diagnostic tool software for various vehicle Electronic Control Modules

August 1997- **Service Engineer**, Cadillac Motor Car Division
June 1998 Assisted technicians in diagnosis and repair of Cadillac vehicles, maintained an information database, identified and tracked trends, performed root-cause analysis, and recommended solutions

OTHER WORK EXPERIENCE

August 2008 - **Harley-Davidson Riding Academy Motorcycle Safety instructor,** Grand Rapids Present Harley-Davidson
Instruct motorcycle rider safety course for Grand Rapids Harley-Davidson's Riding Academy program

June 1995 - **Systems Engineer, Hughes Training Inc. (Hughes Aircraft Co.)**
August 1997 Designed and developed engineering courses for various General Motors' advanced engineering projects

July 1986 - **Sergeant E-5, United States Army Reserve (retired)**
July 2005 Certified military instructor in three areas of expertise: Light-Wheeled Vehicle Mechanics, Crane Operation, and Battlefield Communication

October 1992 - June 1995 **Engineering Instructor, Ford Motor Co. (via Bartech)**
Delivered stand-up instruction in a company-sponsored engineering university; created lesson plans and wrote textbooks; developed subject-matter expertise in powertrain controls, from microprocessor strategy to OBD-II systems

June - October 1992 **Prototype Technician, Roush Industries**
Prepared prototype vehicles for engineering testing

July 1991 - June 1992 **Technician, Lakeside Toyota-Lexus**
Performed light through heavy repairs, warranty diagnosis, and vehicle maintenance programs

January - May 1991 **Student Teacher, Midland Dow High School**
Instructed Automotive Technology and Advanced Drafting

January - May 1990 **Teaching Assistant, Central Michigan University**
Assisted Professor in automotive maintenance course by delivering course material and developing lab activities

1988-1991 **Automotive Technician, Souder's Amoco**
Performed light repairs specializing in no-starts

SPECIAL SKILLS

Canvas and Blackboard Learning Management System (LMS)
Instructional Systems Design
Microsoft Word, Excel, Project, and PowerPoint
Benchmark stand-up instruction
Subject-matter expertise:
- Vehicle ECM communication
  - Keyword protocol 82 and 2000, Class 2, CAN, GM LAN, J1979 (CARB) and J2190 Powertrain controls
- Automotive transmissions (electrical and mechanical)
- Engine design and performance
- Spark ignition
- Compression Ignition
- Emission controls
- Braking systems
- HVAC
- Suspension and steering systems
- Military vehicle design and performance
- Military communication networks and systems
- Satellite communication hardware and software

PROFESSIONAL ASSOCIATIONS / CERTIFICATIONS / HONORS

ASE Master Recertified Automobile Technician
ASE Recertified, Advanced Engine Performance (L-1)
ASE Certified Truck Technician
Ferris Foundation Grant recipient, 2009, 2010 & 2011
Registered Student Organization Advisor of the Year, 2019 (SAE Baja)
Society of Automotive Engineers (SAE) member
Automotive Transmission Rebuilders Association (ATRA) member
ASTM International Voting Member, D02 & D15
Faculty Advisor, SAE Baja Racing Club
Former Faculty Advisor, Sigma Chi Fraternity
Former Faculty Advisor, Lambda Chi Alpha Fraternity
Former Faculty Advisor, High Performance Motorsports Student Organization (HPMSO)
Former Ferris State University Academic Senate Diversity Committee member
GM President's Council Honors
Ford Powertrain Customer Service Award
Security Clearance: SECRET (expired)

PUBLICATIONS

Leonard, Russell A. Jr., "Females in Automotive Careers: Career Decision-Making Influences and Experiences During University Preparation and Beyond" (2016). *Dissertations.* Paper 1608. http://scholarworks.wmich.edu/dissertations/1608

I have reviewed the Manual Drivetrains and Axles book by Halderman/Birch multiple times including the latest edition (7th) dated 2015, Prentice Hall, 978-0-13-351504-6.

PRESENTATIONS

"How to Make Biodiesel" for the Energy Summer Youth Camp on July 12-16, 2010. The students made biodiesel fuel out of waste vegetable oil from the University's dining facility, and then used it to fuel the test diesel engine.

Biodiesel Processing, Michigan Energy conference, April 7-8, 2009.

Russell A. Leonard, Jr., PhD
2275 Kinney Ave NW
Grand Rapids, MI 49534
Cell: 616-970-1734
E-mail: rleonardjr@hotmail.com

EDUCATION

Doctor of Philosophy, Higher Educational Leadership, June 2016
Western Michigan University, Kalamazoo, Michigan

Master of Education, December 1997, magna cum laude
Wayne State University, Detroit, Michigan
Curriculum: Instructional Systems Design & Adult Education

Bachelor of Science in Secondary Education, June 1991
Central Michigan University, Mount Pleasant, Michigan
Major: K-12 Industrial Engineering & Technology Education, automotive focus

WORK EXPERIENCE: FERRIS STATE UNIVERSITY

August 2018 - Present
Professor, Ferris State University. College of Engineering Technology, Present
School of Automotive and Heavy Equipment
Currently instructing in both the Automotive Service and Automotive Engineering Technology programs

August 2017 - Present
Chair, University Curriculum Committee.
This position oversees curriculum changes at the university level, creates, enforces and instructs on university policy, reports to the Academic Senate and works closely with the Academic Affairs office and faculty

August 2015 – Present
Faculty Advisor, SAE Baja Racing Club
SAE Baja is a student led team that designs, builds, tests and races an off-road buggy. The team competes against other universities

August 2010 - August 2012
Coordinator, Automotive Engineering Technology, Ferris State University.
College of Engineering Technology, School of Automotive and Heavy Equipment

PETITIONER'S EXHIBIT 1002
US PATENT NO. 6,581,565

Part-time administrator with teaching duties for the Automotive Engineering Technology program

August 2008 - August 2018 **Associate Professor, Ferris State University**. College of Engineering Technology, School of Automotive and Heavy Equipment

Instructed in both the Automotive Service and Automotive Engineering Technology programs

August 2008 - 2017 **Ridercoach**, **Motorcycle Safety Foundation (MSF)**
Ferris State University Corporate and Professional Development Center
Instructed the Basic Rider Course for the Motorcycle Safety Foundation Program

August 2002 - August 2008 **Assistant Professor, Ferris State University**. College of Technology, Automotive Department

Instructed in both the Automotive Service and Automotive Engineering Technology programs

WORK EXPERIENCE: GENERAL MOTORS

June 1998 - August 2002 **Release Engineer**, Service Operations
Develop and validate diagnostic tool software for various vehicle Electronic Control Modules

August 1997- June 1998 **Service Engineer**, Cadillac Motor Car Division
Assisted technicians in diagnosis and repair of Cadillac vehicles, maintained an information database, identified and tracked trends, performed root-cause analysis, and recommended solutions

OTHER WORK EXPERIENCE

August 2008- Present **Harley-Davidson Riding Academy Instructor,** Grand Rapids Harley-Davidson
Instruct basic motorcycle rider safety course for the Harley-Davidson Riding Academy program

June 1995- August 1997 **Systems Engineer, Hughes Training Inc. (Hughes Aircraft Co.)**
Designed and developed engineering courses for various General Motors' projects

July 1986 - **Sergeant E-5, United States Army Reserve (retired)**

PETITIONER'S EXHIBIT 1002
US PATENT NO. 6,581,565

July 2005	Certified military instructor in three areas of expertise: Light-Wheeled Vehicle Mechanics, Crane Operation, and Battlefield Communication with a Secret Security Clearance
October 1992 -June 1995	**Engineering Instructor, Ford Motor Co. (via Bartech)** Delivered stand-up instruction in a company-sponsored engineering university; created lesson plans and co-wrote textbooks; developed subject-matter expertise in powertrain controls, from microprocessor strategy to OBD-II systems
June – October 1992	**Prototype Technician, Roush Industries** Prepared prototype vehicles for engineering testing
July 1991 – June 1992	**Technician, Lakeside Toyota-Lexus** Performed light through heavy repairs, warranty diagnosis, and vehicle maintenance programs
January – May 1991	**Student Teacher, Midland Dow High School** Instructed Automotive Technology and Advanced Drafting
January – May 1990	**Teaching Assistant, Central Michigan University** Assisted Professor in automotive maintenance course by delivering course material and developing lab activities
1988-1991	**Automotive Technician, Souder's Amoco** Performed light repairs specializing in no-starts

COURSES TAUGHT AT FERRIS STATE UNIVERSITY

AUTO 111 Manual Transmissions and Drivelines
AUTO 112 Automotive Brake Systems
AUTO 113 Automotive Electricity and Electronics
AUTO 116 Engine Electrical Systems
AUTO 117 Electronic Fuel Management Systems
AUTO 200 Service Area
AUTO 211 Automatic Transmission
AUTO 214 Automotive HVAC
AUTO 291 Auto Service Internship
AUTO 450 Automotive Fuels and Lubes
AUTO 460 Emissions Systems
AUTO 493 Automotive Engineering Technology Internship
AMGT 300 Automotive Materials
AMGT 493 Automotive Management Internship
FSUS 100 Freshman Seminar
HEQT 230 Diesel Fuel Systems Technology
HEQT 193 Industry Internship
HSET 393 Industry Internship.

PETITIONER'S EXHIBIT 1002
US PATENT NO. 6,581,565

SPECIAL SKILLS

Canvas and Blackboard Learning Management Systems (LMS)
Instructional Systems Design
Subject-matter expertise:
Automotive Fuels and Lubricants
Automotive Coolants and other Liquids
Vehicle ECM and Scan Tool Communication
Powertrain Controls, both Hardware and Software
Automotive Transmissions, Electrical, Mechanical, and Software Calibration
Engine Design, Performance and Calibration
Spark Ignition
Compression Ignition
Gasoline and Diesel Emission Controls
Braking Systems
HVAC
Suspension and Steering Systems
Military Vehicle Design and Performance
Military Communication Networks and Systems
Satellite Communication Hardware and Software
Lift and Load (Crane Operation) Specialist

PROFESSIONAL ASSOCIATIONS *I* CERTIFICATIONS *I* HONORS

ASE Master Recertified Automobile Technician
ASE Recertified, Advanced Engine Performance (L-1)
ASE Certified Truck Technician
Ferris Foundation Grant recipient, 2009, 2010 & 2011
Society of Automotive Engineers (SAE) member
Automotive Transmission Rebuilders Association (ATRA) member
Faculty Advisor, SAE Baja Racing Club
Former Faculty Advisor, Sigma Chi Fraternity
Former Faculty Advisor, Lambda Chi Alpha Fraternity
Former Faculty Advisor, High Performance Motorsports Student Organization (HPMSO)
Former Ferris State University Academic Senate Diversity Committee member
GM President's Council Honors
Ford Powertrain Customer Service Award
Ferris State University Registered Student Organization Advisor of the Year 2018-2019 for Baja SAE

PUBLICATIONS

Leonard, Russell A. Jr., "Females in Automotive Careers: Career Decision-Making Influences

PETITIONER'S EXHIBIT 1002
US PATENT NO. 6,581,565

and Experiences During University Preparation and Beyond" (2016). *Dissertations.* Paper 1608. http://scholarworks.wmich.edu/dissertations/1608

I have reviewed the Manual Drivetrains and Axles book by Halderman/Birch multiple times including the latest edition (7th) dated 2015, Prentice Hall, 978-0-13-351504-6.

PRESENTATIONS

"How to Make Biodiesel" for the Energy Summer Youth Camp on July 12-16, 2010. The students made biodiesel fuel out of waste vegetable oil from the University's dining facility, and then used it to fuel the test diesel engine.

Biodiesel Processing, Michigan Energy conference, April 7-8, 2009.

PROFESSIONAL ORGANIZATIONS

ASTM International (2014-present)

I am a voting member of ASTM International's Committee D02 on Petroleum Products, Liquid Fuels, and Lubricants and Committee D15 on Engine Coolants and Related Fluids. ASTM International is an international, not-for-profit organization, based in the USA, for the development, collection, standardization and dissemination of technical knowledge in a wide range of disciplines and is a voluntary, consensus standards organization.

In this capacity, I review; changes to current specifications, new specifications, and the deletion of obsolete specifications. The changes typically come out at multiple times each month. It requires, on average, 5 to 10 hours per month to review all the new changes and determine if there is benefit to the automotive industry. Each main committee in ASTM International is composed of subcommittees that address specific segments within the general subject area covered by the technical committee. Along with the general subject area of D02 and D15, I am a member of the following subcommittees:

D02.01	Combustion Characteristics
D02.06	Analysis of Liquid Fuels and Lubricants
D02.08	Volatility
D02.09	Oxidation of Lubricants

PETITIONER'S EXHIBIT 1002
US PATENT NO. 6,581,565

D02.14 Stability and Cleanliness of Liquid Fuels
D02.A0 Gasoline and Oxygenated Fuels
D02.B0 Automotive Lubricants
D02.E0 Burner, Diesel, Non-Aviation Gas Turbine, and Marine Fuels
D02.G0 Lubricating Grease
D02.L0 Industrial Lubricants and Engineering Sciences of High Performance Fluids and Solids
D02.N0 Hydraulic Fluids
D02.P0 Recycled Products
D15.03 Physical Properties
D15.04 Chemical Properties
D15.07 Specifications
D15.11 Heavy Duty Coolants
D15.15 Recycled Engine Coolant
D15.21 Long Life Engine Coolant
D15.21.01 TG on Glycerin/Glycol Blend Base Fluids
D15.22 Non-Aqueous Coolants
D15.25 Diesel Exhaust Fluid
D15.97 World Coolant Standards

ASTM Task Groups

WK51908 – Standard Test Method for Freezing Point of Aqueous Engine Coolants
WK58499 - Standard Specification for Fully-Formulated Glycol Base Engine Coolant for Heavy-Duty Engines
WK43678 – Standard Specification for Aqueous Engine Coolant Grade Glycol (53% Nominal)
WK59630 – Standard Specification for Engine Coolant Grade 1,3-Propanediol (PDO)
WK68375 - ASTM Reference Fluid for Carboxylate-Inhibited Coolant Tests

SAE **Member since 2011**

Fall 2015 – present **Faculty Advisor**, **Ferris State University SAE Baja student race team**
Consult with the team during regular meetings regarding vehicle design, oversee the purchase of parts and materials for the team and expense them through the university accounting process. Assist in the planning of the team's travel including three competitions per year with many competitions located out-of-state.

National Science Foundation (NSF) Grant Contact Credit

PETITIONER'S EXHIBIT 1002
US PATENT NO. 6,581,565

Semester
Hours Rate Hours

06/2010 Selected Topics in Energy Education: Biofuels Sem. Hrs.
1.0

Professional Development Grants

02/2009	Performance Development of IC Engines	18	CEU	1.8
09/2009	Fuels & the Future for IC Engines	18	CEU	1.8
05/2014	ASTM Gasoline Specs, Testing,& Technology	21	CEU	2.1
09/2014	ASTM Diesel Specs, Testing & Technology	21	CEU	2.1
09/2016	ASTM Petroleum Lab Technician Series: Biodiesel	18	CEU	1.8
06/2019	Center for Advanced Automotive Technology (CAAT) Electric Drive Vehicles Technology	16	CEU	1.6

Non-credit coursework:

10/2008	Toyota TIS2	8		0.5
02/2009	Toyota Engine Management Systems Diagnosis	4		0.25
02/2009	Tech Expo: OBD II, Duramax Diesel, 5 gas	8		0.5
02/2010	Tech Expo: Alignment, Mitchel mgt., ABS	8		0.5
02/2011	Tech Expo: VW Drive By Wire & 6.7L Ford Diesel	8		0.5
03/2012	Powerstroke Diesel Fundamentals Seminar	4		0.25
08/2013	Automotive Networks and Fuel Trim issues	4		0.25
03/2019	National Alternative Fuels Training Consortium	32		2

Electric Drive Vehicle Technician Training

PTS On-Demand: Professional Technician's Seminars

12/22/2015	Diagnosing Catalytic Converter Efficiency Codes	1	PDH
12/22/2015	HVAC Update 2015	1	PDH
12/19/2015	Variable Valve Timing Tips &Tricks	1	PDH
12/23/2015	Guerilla Diagnostics	1	PDH
12/23/2015	ABS and Vehicle Stability Control	1	PDH
01/01/2016	No-scope Diagnosis	1	PDH
01/01/2016	Hybrid HV Battery Diagnosis	1	PDH
01/01/2016	Ford 6.0 Powerstroke Misfire Tips	1	PDH
01/01/2016	Sensor Diagnosis	1	PDH
01/01/2016	Hyundai/Kia Tips &Tricks	1	PDH
01/01/2016	Voltage Drop Testing	1	PDH
01/01/2016	Chrysler EVAP Tips &Tricks	1	PDH
01/01/2016	OE Scan Tool Update	1	PDH
01/01/2016	Brain Teasers: Diagnostic Puzzles	1	PDH
01/01/2016	More Duramax Diesel Tips &Tricks	1	PDH
01/01/2016	Diesel No-Start Diagnosis	1	PDH
01/01/2016	GM Idle Stop and Light Hybrid	1	PDH
01/01/2016	Electronic Transmission Controls Part II	1	PDH

PETITIONER'S EXHIBIT 1002
US PATENT NO. 6,581,565

01/01/2016 Chrysler/Jeep Tips &Tricks 1 PDH

01/01/2016 Understanding Wiring Schematics Part II 1 PDH

ASTM Petroleum Lab Technician Series: Biodiesel

05/30/2017 ASTM Standard D2622-16 Standard Test Method for 1 CEU
0.1
Sulfur in Petroleum Products

05/30/2017 ASTM Standard D1298-12b Standard Test Method for 1 CEU
0.1
Density, Relative Density or API Gravity of Crude Petroleum and Liquid Petroleum Products by Hydrometer Method

06/19/2017 ASTM Standard D1319-15 Standard Test Method for 1 CEU
0.1
Hydrocarbon Types in Liquid Petroleum Products by Fluorescent Indicator Adsorption

06/20/2017 ASTM Standard D4530-15 Standard Test Method for 1 CEU
0.1
Determination of Carbon Residue (Micro Method)

06/20/2017 ASTM Standard D445-15a Standard Test Method for 1 CEU
0.1
Kinematic Viscosity of Transparent and Opaque Liquids (and Calculation of Dynamic Viscosity)

06/20/2017 ASTM Standard D4294-16e1 Standard Test Method for 1 CEU
0.1
Sulfur in Petroleum and Petroleum Products by Energy Dispersive X-ray Fluorescence Spectrometry

06/21/2017 ASTM Standard D5453-16 Standard Test Method for 1 CEU
0.1
Total Sulfur in Light Hydrocarbons, Spark Ignition Engine Fuel,

PETITIONER'S EXHIBIT 1002
US PATENT NO. 6,581,565

Diesel Engine Fuel, and Engine Oil by Ultraviolet Fluorescence

06/21/2017 ASTM Standard D524-15 Standard Test Method for 1 CEU 0.1
Ramsbottom Carbon Residue of Petroleum Products

06/21/2017 ASTM Standard D482-13 Standard Test Method for 1 CEU 0.1
Ash from Petroleum Products

06/22/2017 ASTM Standard D97-17 Standard Test Method for 1 CEU 0.1
Pour Point of Petroleum Products

06/21/2017 ASTM Standard D93-15a Standard Test Method for 1 CEU 0.1
Flash Point by Pensky-Martens Closed Cup Tester

06/22/2017 ASTM Standard D86-16a Standard Test Method for 1 CEU 0.1
Distillation of Petroleum Products and Liquid Fuels at Atmospheric Pressure

06/22/2017 ASTM Standard D664-11a Standard Test Method for 1 CEU 0.1
Acid Number of Petroleum Products by Potentiometric Titration

06/25/2017 ASTM Standard D974-14e2 Standard Test Method for 1 CEU 0.1
Acid and Base Number by Color-Indicator Titration

06/25/2017 ASTM Standard D1319-14 Standard Test Method for 1 CEU 0.1
Hydrocarbon Types in Liquid Petroleum Products by Fluorescent Indicator Adsorption

06/25/2017 ASTM Standard D2622-10 Standard Test Method for 1 CEU 0.1

Sulfur in Petroleum Products by Wavelength Dispersive X-ray Fluorescence Spectrometry

06/25/2017 ASTM Standard D4294-10 Standard Test Method for 1 CEU 0.1
Sulfur in Petroleum and Petroleum Products by Energy Dispersive X-ray Fluorescence Spectrometry

06/25/2017 ASTM Standard D5453-12 Standard Test Method for 1 CEU 0.1
Total Sulfur in Light Hydrocarbons, Spark Ignition Engine Fuel, Diesel Engine Fuel, and Engine Oil by Ultraviolet Fluorescence

UNITED STATES PATENT AND TRADEMARK OFFICE

BEFORE THE PATENT TRIAL AND APPEAL BOARD

Volkswagen Group of America, Inc.,
Petitioner

v.

Michigan Motor Technologies LLC,
Patent Owner

Case IPR2020-00445
Patent No. 6,581,565

PATENT OWNER'S PRELIMINARY RESPONSE

Under 35 U.S.C. § 42.107

Mail Stop PATENT BOARD
Patent Trial and Appeal Board
U.S. Patent and Trademark Office
P.O. Box 1450
Alexandria, VA 22313-1450
Submitted Electronically via PTAB E2E

TABLE OF CONTENTS

I. INTRODUCTION 1

II. APPLICABLE LEGAL PRINCIPLES 6

III. THE '565 PATENT 8

A. Challenged Claims 12

IV. CLAIM CONSTRUCTION 13

V. OVERVIEW OF CITED PRIOR ART 14

A. Robichaux and Scherer 14

B. Takahashi 17

C. Suzuki 18

VI. THE PETITION SHOULD BE REJECTED UNDER § 314(A) BECAUSE PETITIONER IS UNLIKELY TO PREVAIL WITH RESPECT TO ANY CHALLENGED CLAIM 19

A. All Grounds of the Petition Fail: Claims 1-7 Are Not Rendered Obvious by *Robichaux* and *Scherer* 19

B. Petitoner Relies on Inpermissible Hindsight 22

VII. CONCLUSION 26

TABLE OF AUTHORITIES

Federal Cases

Apple Inc. v. Contentguard Holdings, Inc.,
IPR2015-00442, Paper 9 (PTAB July 13, 2015) 9, 10, 11

Back in Five, Ltd. Liab. Co. v. Infinite Int'l Inc.,
No. CV 11-00243 GAF (AJWx), 2012 U.S. Dist. LEXIS 199183 (C.D. Cal. Sep. 11, 2012) 31

Graham v. John Deere Co.,
383 U.S. 1 (1966).....9

In re Magnum Oil Tools Int'l.,
829 F.3d 1364 (Fed. Cir. 2016) 9, 10

In re NTP, Inc.,
654 F.3d 1279 (Fed. Cir. 2011) 11

In re Omeprazole Patent Litig. v. Apotex Corp.,
536 F.3d 1361 (Fed. Cir. 2008) 10

In re Stepan Co.,
868 F.3d 1342 (Fed. Cir. 2017) 10

InTouch Techs., Inc. v. VGo Communs., Inc.,
751 F.3d 1327 (Fed. Cir. 2014) 10

KSR Int'l Co. v. Teleflex Inc.,
550 U.S. 398 (2007)..... 11, 29

Ortho-McNeil Pharm. v. Mylan Labs,
520 F.3d 1358 (Fed. Cir. 2008) 11

P&G v. Teva Pharms. USA, Inc.,
566 F.3d 989 (Fed. Cir. 2009) 11

SAS Institute Inc. v. Iancu,
138 S. Ct. 1348 (2018).....9

Unified Patents Inc. v. C-Cation Techs., LLC,
IPR2015-01045, Paper 15 (PTAB Oct. 7, 2015).....9

Unigene Labs., Inc. v. Apotex, Inc.,
655 F.3d 1352 (Fed. Cir. 2011) 10

Federal Statutes

35 U.S.C. § 103 9

35 U.S.C. 282 19

37 C.F.R. § 42.100 19

37 C.F.R. § 42.107 1

TABLE OF EXHIBITS

Exhibit	Description
2001	Expert Declaration of Dr. Russell Leonard

Petitioner Volkswagen Group of America, Inc. ("VWoA" or "Petitioner") filed a Petition for *Inter Partes* Review of U.S. Patent No. 6,581,565 ("the '565 patent") on January 31, 2020. (IPR2020-00445, Paper No. 3 ("Petition" or "Pet.").) Through the undersigned Counsel, Patent Owner, Michigan Motor Technologies LLC ("MMT"), submits the following Patent Owner's Preliminary Response pursuant to 37 C.F.R. § 42.107 (a). *See also* 37 C.F.R. § 42.107 (b).

I. INTRODUCTION

Patent Owner, MMT, respectfully requests that the Board deny the Petition because Petitioner failed to show that there is a reasonable likelihood that it would prevail with respect to at least one of the claims challenged in the Petition.

Specifically, Petitioner has not demonstrated a reasonable likelihood that any claim of the '565 patent would be obvious in view of the *Robichaux* (Exhibit 1020), *Scherer* (Exhibit 1007), *Takahashi* (Exhibit 1008), or *Suzuki* (Exhibit 1005) references upon which it relies. For each ground, Petitioner relies upon *Robichaux* as a primary reference, and *Scherer* as a secondary reference. *Takahashi* is relied upon as a tertiary reference for Ground 2. *Suzuki* is relied upon as a tertiary reference for Ground 3. *Suzuki* and *Takahashi* are relied upon as tertiary references for Ground 4.

The '565 patent is generally directed to an engine torque controller for a spark ignition internal combustion engine, specifically, for Direct Injection Spark

Ignition (DISI) engines. (Exhibit 1001 at Abstract, 1:5-8, 1:62-63, Fig. 1) In this regard, the '565 patent discloses and claims a torque controller and a method for controlling torque for an engine in which DISI engine torque is controlled in dependence upon a high-pass filtered difference signal which is the difference between a desired torque signal and a signal representing an estimate of the current torque. (Ex. 1001 at Abstract.)

Robichaux

Robichaux discloses a system and method for controlling an engine including determining a desired engine brake torque and modifying the desired engine brake torque based on current engine operating conditions prior to determination of control parameters, including at least one of an airflow and a fuel quantity. (Ex. 1020 at Abstract.) *Robichaux's* system and method controls engine torque by modifying the desired engine brake torque by (1) combining the desired engine brake torque with an idle speed torque to generate a first intermediate torque, (2) comparing the first intermediate torque to an actual engine brake torque to generate a second intermediate torque, (3) generating a feedback correction torque based on the second intermediate torque, and (4) combining (a) the first intermediate torque, (b) the feedback correction torque, and (c) a second intermediate torque to produce a third intermediate torque (4) which represents

accessory load or a frictional torque loss which varies with temperature. (Ex. 1020 at ln. 18-30.)

Scherer

Scherer discloses a process and an apparatus for controlling the engine torque of an internal combustion engine by regulating the ignition point in an Otto engine, or by regulating the start and the duration of the fuel injection in a diesel engine. (Ex. 1007 at Abstract, 1:7-11.)

Takahashi

Takahashi is a tertiary reference that controls the throttle valve and fuel injection in a manner that ensures the engine output torque and air/fuel ratio match target values. (Ex. 1008 at 43-65.)

Suzuki

Suzuki is a tertiary reference which discloses a system comprising an engine controller capable of operating in homogenous and stratified mode with means to determine load and correct torque and vary spark timing or ratio of air and fuel based on the determined load. (Ex. 1005 at 15:46-16:2.) *Suzuki* does not disclose using a high pass filter. (Exhibit 2001, Leonard Declaration at ¶ 39.)

Petitioner's proposed combination of *Robichaux* and *Scherer* to purportedly render obvious the challenged claims of the '565 patent fails because (1) neither reference discloses critical limitations of the challenged claims, and (2) Petitioner

relies on impermissible hindsight in a misguided attempt to piece together the elements of the claimed invention using the challenged claims and disclosure of the '565 patent as a blueprint or roadmap for doing so.

Scherer does not disclose a stratified charge operation mode for a DISI engine as the '565 patent discloses and claims. (Ex. 2001 at ¶ 43.) Further, *Scherer* discloses adjusting the torque of an internal combustion engine by regulating the start and the duration of fuel injection in a diesel engine. (Ex. 1007 at 1:5-12.) Although *Scherer* discloses a high pass filter, it is not employed in the unique manner of the teachings and challenged claims of the '565 patent. (Ex. 2001 at ¶ 46.) *Scherer* only filters a desired engine torque signal and does not high-pass filter "the difference signal." (Ex. 2001 at ¶¶ 30-39.)

The '565 patent teaches and the challenged claims of the '565 patent encompass a device controlling torque output of an engine. (Ex. 1001 at 4:1-22.). The device includes a comparator that produces a difference signal representing the difference between (1) a desired torque signal and (2) a signal representing an estimate of the current torque. (*Id.*) The device high-pass filters the difference signal to eliminate low frequency components. (*Id.*) A transient torque controller receives as an input the high-pass filtered difference signal and outputs a fuel adjustment signal and a spark adjustment signal. (Ex. 1001 at 4:1-22.)

Scherer discloses adjusting engine torque where an ignition point adjusting branch with the input-side high pass filter is parallel to the air-flow rate regulating branch. (Ex. 1007 at 4:20-52.) The ignition point adjusting branch is used only to adjust desired engine torque which cannot be regulated by the air-flow rate regulating branch. (*Id*.) Otherwise stated, *Scherer* uses a high pass filter in homogenous mode, whereas, the '565 patent teaches using a high pass filter for stratified and homogeneous operation. (Ex. 1001 at 3:40-49.) Further, *Scherer* only filters a desired engine torque signal and does not high-pass filter "the difference signal." (Ex. 2001 at ¶¶ 30-39.)

Scherer was already considered by the Examiner during prosecution of the patent application which matured into the '565 patent and should thus not even be considered under the provisions of 35 U.S.C. § 325(d). All the other prior art references upon which Petitioner relies are merely cumulative with the admitted prior art, and thus, should also not be considered.

In sum, to support its obviousness analysis, Petitioner attempts to modify *Robichaux*, which is cumulative of the admitted prior art of record, by using a teaching of *Scherer*, which is already of record, to arrive at a claimed combination that neither of these references discloses.

II. APPLICABLE LEGAL PRINCIPLES

"[T]he decision whether to institute an *inter partes* review is discretionary." *Unified Patents Inc. v. C-Cation Techs., LLC*, IPR2015-01045, Paper 15 at 3 (PTAB Oct. 7, 2015) (citing 37 C.F.R. § 42.108 (a)). Petitioner has the burden to show that it is likely to prevail as to at least one claim of the '565 patent. 35 U.S.C. § 314; *SAS Institute Inc. v. Iancu*, 138 S. Ct. 1348 (2018).

To make a prima facie showing of obviousness under 35 U.S.C. § 103, the Petition must, among other requirements, fulfill the requirements set forth in *Graham v. John Deere Co.*, 383 U.S. 1 (1966), including demonstrating that the cited references disclose each element of a challenged claim. *In re Magnum Oil Tools Int'l.*, 829 F.3d 1364, 1376 (Fed. Cir. 2016); *see also Apple Inc. v. Contentguard Holdings, Inc.*, IPR2015-00442, Paper 9 at 12-13 (PTAB July 13, 2015).

Petitioner also has the burden to show there would have been some motivation to combine the asserted prior art, and that the proposed combination would render the patented claims obvious. "Obviousness requires more than a mere showing that the prior art includes separate references covering each separate limitation in a claim under examination." *Unigene Labs., Inc. v. Apotex, Inc.*, 655 F.3d 1352, 1360 (Fed. Cir. 2011) (internal citation omitted); *see also In re Magnum Oil Tools Int'l.*, 829 F.3d at 1376. Even if individual modifications or

choices were obvious, a petition must explain why making all of the changes at once would be obvious. *Apple Inc. v. Contentguard*, Paper 9 at 16-17 ("[T]he mere fact that individual changes might have been obvious does not make doing all of the changes at once obvious.").

The Federal Circuit has found that, even for an obviousness challenge based on a single reference in view of the knowledge and skill of a POSITA, there must be a motivation to make the combination and a reasonable expectation that such a combination would be successful, otherwise a skilled artisan would not arrive at the claimed combination. *In re Stepan Co.*, 868 F.3d 1342, 1345-46 (Fed. Cir. 2017). In other words, when a gap in a single prior art reference requires filling with, for example, the knowledge of one of ordinary skill, there must be a further showing that the skilled artisan would have arrived at the claimed invention.

The lack of a technological obstacle to combining references, in and of itself, does not justify a finding of obviousness. *See In re Omeprazole Patent Litig. v. Apotex Corp.*, 536 F.3d 1361, 1380-81 (Fed. Cir. 2008). A reason for combining disparate prior art references is critical and should be made explicit. *InTouch Techs., Inc. v. VGo Communs., Inc.*, 751 F.3d 1327, 1351 (Fed. Cir. 2014) (internal citation omitted).

Hindsight analysis is inappropriate. Obviousness must be measured "*at the time the invention was made*." *Ortho-McNeil Pharm. v. Mylan Labs*, 520 F.3d

1358, 1364 (Fed. Cir. 2008) (emphasis in original). A petition must demonstrate a rationale to combine prior art references without relying on the patent disclosure itself. *Apple Inc. v. Contentguard*, Paper 9 at 15, 17; *see also P&G v. Teva Pharms. USA, Inc.*, 566 F.3d 989, 995 (Fed. Cir. 2009). The Petitioner must not use the patent as a roadmap. *In re NTP, Inc.*, 654 F.3d 1279, 1299 (Fed. Cir. 2011) (internal citation omitted); *see also KSR Int'l Co. v. Teleflex Inc.*, 550 U.S. 398, 421 (2007).

III. THE '565 PATENT

The '565 patent generally relates to an engine torque controller for a spark ignition internal combustion engine and more specifically for direct injection engines. (Ex. 1001 at Abstract.)

The '565 patent addresses the problem which occurs in stratified mode or homogenous mode where there is a steady state error between the torque demanded and the estimate of the torque produced. (Ex. 1001 at 1:46-49.) This problem is overcome by producing a difference signal that represents the difference between a desired torque signal and a signal representing an estimate of the current torque and high-pass filtering the difference signal to eliminate low frequency components, among other things. Figure 3 describes a block diagram of a torque producer, in accordance with the '565 patent:

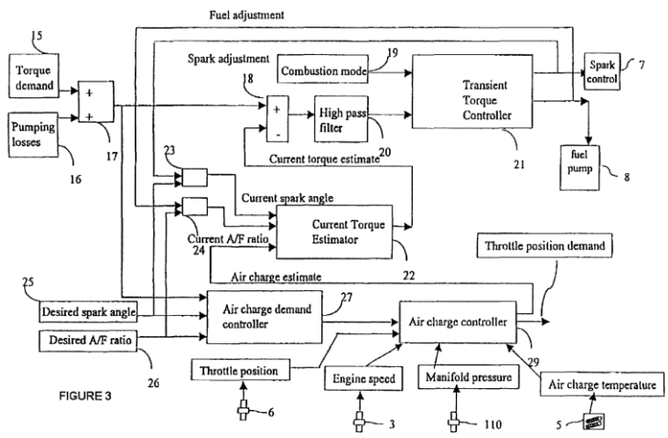

FIGURE 3

The air charge demand controller 27 generates an air charge demand signal that is received by an air charge controller 29. The air charge controller 29 also receives as inputs a signal indicating throttle position that is received from the throttle position indicator 6 (FIG. 1), and signals from the engine speed sensor 3, the manifold absolute pressure sensor 110 and the air charge temperature meter 5. The air charge controller 29 generates a signal indicating desired throttle position that is sent to throttle 9 (FIG. 1) and a signal representing an estimate of the air charge.

The estimated air charge may be different from the air charge demanded by the air charge demand controller 27 due to delays in the engine 100, such as the time taken for the throttle 9 to move, the time taken for the pressure in the air intake manifold 152 to rise or fall, or any errors in position of the throttle. The air charge estimate signal is sent to a current torque estimator 22.

The estimate of the current torque is compared to the desired torque signal by a comparator 18 to generate an error signal 35 which is then filtered by a high pass filter 20. The resulting high-pass filtered error signal is used by a transient torque controller 21 to generate a control signal for temporarily adjusting the torque produced by the engine 100.

A combustion mode signal 19 indicates whether the engine 100 is operating in a stratified mode or in a homogenous mode. If the engine 100 is operating in the stratified mode then a fuel adjustment signal is generated and sent to the fuel pump 8 in order to adjust the amount of fuel which is injected into

> the combustion chamber 108 by the fuel injector 130. If the engine 100 is operating in the homogenous mode then a spark adjustment signal is generated and sent to the spark control unit 7 to adjust the timing of the ignition spark generated by the spark plug 106.
>
> A signal representing the current spark angle is calculated by a calculator 23 using the desired spark angle and the spark adjustment signal received from the transient torque controller 21. A signal representing the current air/fuel ratio is calculated by a calculator 24 using the desired air/fuel ratio and the fuel adjustment signal received from the transient torque controller 21. When the engine 100 is operating in stratified mode the current spark angle will be equal to the desired spark angle 25. When the engine 100 is operating in homogenous mode the current air/fuel ratio will be equal to the desired air/fuel ratio 26.

(Ex. 1001 at 3:6-60)

The basic inventive concept disclosed and claimed in the subject '565 patent is, in the context of controlling the engine torque of a spark ignition direct injection internal combustion engine, a method in which engine torque is controlled dependent upon a high-pass filtered difference signal representative of the difference between desired torque and current torque estimate signals. (Ex. 2001 at ¶ 20.)

The method and system of the '565 patent utilizes a torque demand signal which constitutes a feedforward signal and a current torque estimate signal which constitutes a feedback signal. (*Id*. at ¶ 21.) These two signals are applied as inputs to a comparator 18 that generates an error signal or difference signal representative of the difference between the two inputs to the comparator. (*Id*.) The error or difference signal is generated by subtracting the current torque estimate from the

torque demand signal. (*Id*.) This error signal indicates instances where torque demand is less than torque produced and instances where torque demand is greater than torque produced. (*Id*.) The high pass filter receives the error signal and blocks (filters out) smaller differences from the comparator and only allows larger differences to pass through to the transient torque controller. Indeed, the '565 invention does not expend energy with smaller, less significant errors by only acting upon larger errors. (*Id*.) This design minimizes hunting, where the system is continuously chasing changes back and forth. (*Id*.)

A high-pass filter is used to filter the difference signal of desired torque and current torque estimate signals and it is this high-pass filtering of the difference of these two signals that makes the '565 patent unique. It is the high-pass filtered difference signal that controls engine torque. (*Id*. at 22.)

The '565 patent discloses what was well known in the prior art, namely, that, "[i]n engine torque controllers for DISI engines, when the engine is operated in stratified mode, spark angle has little influence on the torque produced. (*Id*. at 23.) The torque producer modifies the air/fuel in order to control the torque produced. (*Id*.) Conversely, when the engine is operating in homogenous mode… [t]he torque producer modifies the timing of the spark ignition in order to control the torque produced." (Ex. 1001 at 1:36-45; (*Id*. at 23.) This disclosure constitutes the "admitted prior art" of the '565 patent.