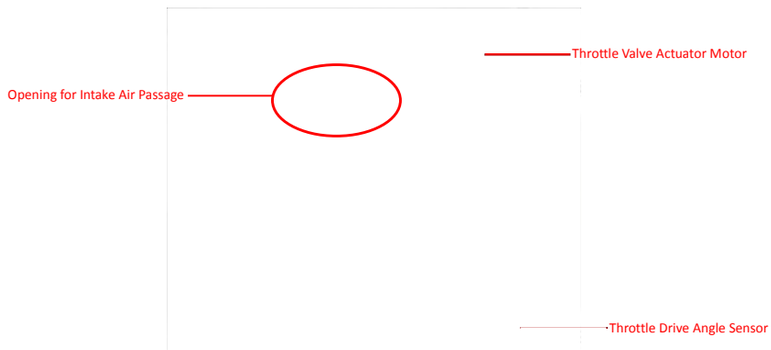

For example, as shown above, a positioning device, the Throttle Valve Control Module J338 of an internal combustion engine (VW 3.2L & 3.6L), is actuated via a Throttle Valve Actuator Motor.

Figure 27

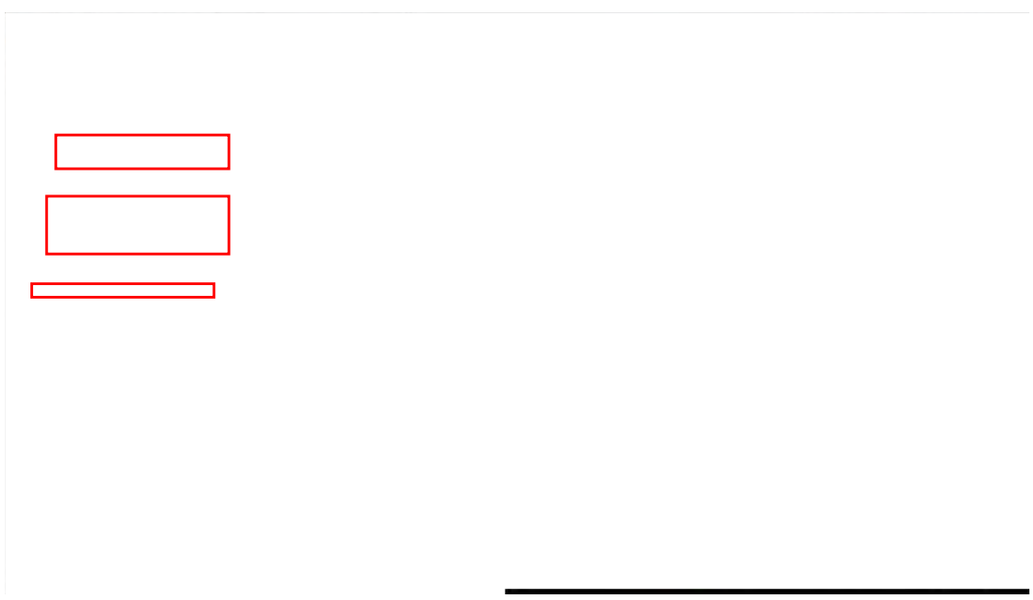

For example, as shown above, a positioning device, the Throttle Valve Control Module J338 of an internal combustion engine (VW 3.2L & 3.6L), is actuated via a Throttle Valve Actuator

Motor as commanded by the ECM, to change to a commanded position (based on the driver demand commanded from the Accelerator Position Sensor 2 G185).

Figure 28

Touareg 2011 ➤
Generic Scan Tool - Edition 09.2016

DTC / Description	Monitor Strategy Description	Malfunction Criteria and Threshold Value	Secondary Parameters with Enable Conditions	Monitoring Time Length	MIL Illumination	Component Diagnostic Procedure
	Fuel Pump Control (FPC) Over-Temperature Power Stage		• Engine speed > 80 RPM			
P0638 Throttle Actuator Control Range/ Performance Bank 1	Throttle Actuator Rationality Check Close Movement	• Time to close to reference point > 0.6 s • And • Deviation to reference point > 2.88%	• Engine speed 0 RPM • Vehicle speed 0 km/h • ECT > -20° C • IAT > -20° C • Case 1: • Ignition on • Case 2: • Engine shut-off-time > 5.0 s • Number of checks 3.0 [-]	• 5.0 s • Multiple	• 2 DCY	– Check the Throttle Valve Control Module - GX3- . Refer to ⇒ "3.6.32 Throttle Valve Control Module GX3 - Checking", page 893 .
	Throttle Actuator Signal Range Check @ Mechanical Stop Low	• TPS 1 signal voltage < 0.40; > 0.80 V • Or • TPS 2 signal voltage < 4.20; > 4.60 V	• Engine speed 0 RPM • Vehicle speed 0 km/h • Case 1: • Ignition on • ECT -20 – 115° C • IAT -20 – 143° C • Case 2: • Engine shut-off-time > 5.0 s • ECT 5.0 – 115° C • IAT 5.0 – 143° C	• 0.3 s • Multiple		
P0641 Sensor Reference Voltage "A" Circuit/ Open	Engine Control Module (ECM): Sensor Reference Circuit A Short Circuit	• Signal voltage < 4.8; > 5.2 V		• 0.5 s • Continuous	• 2 DCY	– If a related sensor voltage code is also set, refer to that code for diagnosis. If no other related codes set, replace the Engine Control Module - J623- . Refer to appropriate repair manual.

500 Rep. Gr.ST - Generic Scan Tool

Touareg 2011, Generic Scan Tool – Edition 09.2016

For example, control effort corresponds to the amount of motor torque that the Throttle Valve Control Module J338 requires to change the position of the throttle valve and this is related to the time it takes the Throttle Valve Control Module J338 to close to a reference point. The

commanded position is determined by the Engine Control Module (ECM) J623 based on information from the Accelerator Position Sensor 2 G185 derived from driver demand, to change to a commanded position (based on the driver demand commanded from the Accelerator Position Sensor 2 G185).

Figure 29

Touareg 2011 ►
Generic Scan Tool - Edition 09.2016

DTC / Description	Monitor Strategy Description	Malfunction Criteria and Threshold Value	Secondary Parameters with Enable Conditions	Monitoring Time Length	MIL Illumination	Component Diagnostic Procedure
	Fuel Pump Control (FPC) Over-Temperature Power Stage	Threshold for a predetermined time period	• Engine speed > 80 RPM			
P0638 Throttle Actuator Control Range/ Performance Bank 1	Throttle Actuator Rationality Check Close Movement	• Time to close to reference point > 0.6 s • And • Deviation to reference point > 2.88%	• Engine speed 0 RPM • Vehicle speed 0 km/h • ECT > -20° C • IAT > -20° C • Case 1: • Ignition on • Case 2: • Engine shut-off-time > 5.0 s • Number of checks 3.0 [-]	• 5.0 s • Multiple	• 2 DCY	– Check the Throttle Valve Control Module -GX3- . Refer to ⇒ "3.6.32 Throttle Valve Control Module GX3 , Checking", page 893 .
	Throttle Actuator Signal Range Check @ Mechanical Stop Low	• TPS 1 signal voltage < 0.40; > 0.80 V • Or • TPS 2 signal voltage < 4.20; > 4.60 V	• Engine speed 0 RPM • Vehicle speed 0 km/h • Case 1: • Ignition on • ECT -20 – 115° C • IAT -20 – 143° C • Case 2: • Engine shut-off-time > 5.0 s • ECT 5.0 – 115° C • IAT 5.0 – 143° C	• 0.3 s • Multiple		
P0641 Sensor Reference Voltage "A" Circuit/ Open	Engine Control Module (ECM): Sensor Reference Circuit A Short Circuit	• Signal voltage < 4.8; > 5.2 V		• 0.5 s • Continuous	• 2 DCY	– If a related sensor voltage code is also set, refer to that code for diagnosis. If no other related codes set, replace the Engine Control Module -J623- . Refer to appropriate repair manual.

500 Rep. Gr.ST - Generic Scan Tool

Touareg 2011, Generic Scan Tool – Edition 09.2016

For example, as shown above, the threshold value demonstrates a determination being made by the Engine Control Module (ECM) J623 regarding whether a control effort exceeds a threshold for a predetermined time period.

Upon information and belief, the claim limitation “determining whether said control effort exceeds a threshold for said predetermined time period” is satisfied.

Figure 30

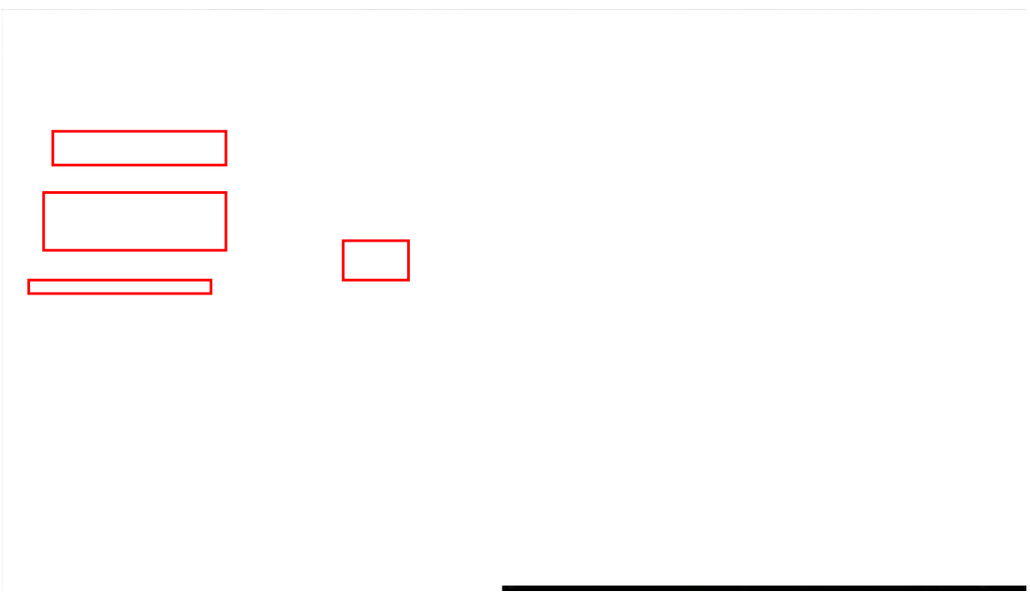

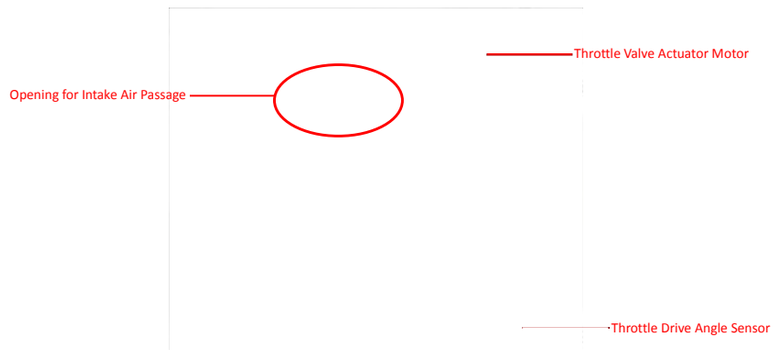

2.3 Electronic Throttle Control (ETC) System

The electronic throttle control (ETC) system consists of the accelerator-pedal module, the engine control module (ECM), and the electronic throttle body. The electronic throttle body mainly consists of the throttle valve, the electric throttle-valve drive element, and the throttle-valve position sensor (TPS). The drive element is a DC servomotor, which acts on the throttle-valve shaft via a gear unit. The throttle-valve position sensor is a redundant sensor system that detects the position of the throttle valve. The sensors have opposite resistance curves so that the ECM can always cross check the signals to ensure the correct position of the throttle valve is always known.

The driver command is detected by a redundant sensor system in the accelerator-pedal module, and the signal is sent to the engine control module. The engine control module then determines the required throttle-valve position by performing calculations from data measured by sensors such as accelerator pedal position sensor, engine speed sensor and vehicle speed sensor. The actual throttle opening can be more or less in proportion to accelerator pedal position given different engine operating points.

Touareg 2011 ➤
Generic Scan Tool - Edition 09.2016

DTC / Description	Monitor Strategy Description	Malfunction Criteria and Threshold Value	Secondary Parameters with Enable Conditions	Monitoring Time Length	MIL Illumination	Component Diagnostic Procedure
	Fuel Pump Control (FPC) Over-Temperature Power Stage	Threshold for a predetermined time period	• Engine speed > 80 RPM			
P0638 Throttle Actuator Control Range/ Performance Bank 1	Throttle Actuator Rationality Check Close Movement	• Time to close to reference point > 0.6 s • And • Deviation to reference point > 2.88%	• Engine speed 0 RPM • Vehicle speed 0 km/h • ECT > -20° C • IAT > -20° C • Case 1: • Ignition on • Case 2: • Engine shut-off-time > 5.0 s • Number of checks 3.0 [-]	• 5.0 s • Multiple	• 2 DCY	– Check the Throttle Valve Control Module - GX3- . Refer to ⇒ "3.6.32 Throttle Valve Control Module GX3 , Checking", page 893 .
	Throttle Actuator Signal Range Check @ Mechanical Stop Low	• TPS 1 signal voltage < 0.40; > 0.80 V • Or • TPS 2 signal voltage < 4.20; > 4.60 V	• Engine speed 0 RPM • Vehicle speed 0 km/h • Case 1: • Ignition on • ECT -20 – 115° C • IAT -20 – 143° C • Case 2: • Engine shut-off-time > 5.0 s • ECT 5.0 – 115° C • IAT 5.0 – 143° C	• 0.3 s • Multiple		
P0641 Sensor Reference Voltage "A" Circuit/ Open	Engine Control Module (ECM): Sensor Reference Circuit A Short Circuit	• Signal voltage < 4.8; > 5.2 V		• 0.5 s • Continuous	• 2 DCY	– If a related sensor voltage code is also set, refer to that code for diagnosis. If no other related codes set, replace the Engine Control Module - J623- . Refer to appropriate repair manual.

500 Rep. Gr.ST - Generic Scan Tool

Touareg 2011, Generic Scan Tool – Edition 09.2016

Control effort is provided by the Throttle Valve Actuator Motor based on the signal sent by the Engine Control Module (ECM) J623. The ECM signal is derived from the Accelerator Position Sensor 2 G185 based on driver demanded acceleration input. The throttle valve is actuated by the Throttle Valve Actuator Motor, sending a Throttle Drive Angle Sensor signals (1 & 2) to the ECM. The Throttle Actuator Control Rationality check shows a threshold valve. The Throttle Valve Actuator Motor will attempt to close the throttle valve within a time limit with feedback

from the Throttle Drive Angle Sensor signals (1 & 2), if the Throttle Drive Angle Sensor signals (1 & 2) indicate a time greater than the time limit, then the DTC will set.

On information and belief, the ECM hardware and software perform the step of "reducing said control effort when said control effort exceeds a threshold for a period."

Figure 31

DTC / Description	Monitor Strategy Description	Malfunction Criteria and Threshold Value	Secondary Parameters with Enable Conditions	Monitoring Time Length	MIL Illumination	Component Diagnostic Procedure
	Fuel Pump Control (FPC) Over-Temperature Power Stage		• Engine speed > 80 RPM			
P0638 Throttle Actuator Control Range/ Performance Bank 1	Throttle Actuator Rationality Check Close Movement	• Time to close to reference point > 0.6 s • And • Deviation to reference point > 2.88%	• Engine speed 0 RPM • Vehicle speed 0 km/h • ECT > -20° C • IAT > -20° C • Case 1: • Ignition on • Case 2: • Engine shut-off-time > 5.0 s • Number of checks 3.0 [-]	• 5.0 s • Multiple	• 2 DCY	– Check the Throttle Valve Control Module - GX3- . Refer to ⇒ "3.6.32 Throttle Valve Control Module GX3 , Checking", page 893 .
	Throttle Actuator Signal Range Check @ Mechanical Stop Low	• TPS 1 signal voltage < 0.40; > 0.80 V • Or • TPS 2 signal voltage < 4.20; > 4.60 V	• Engine speed 0 RPM • Vehicle speed 0 km/h • Case 1: • Ignition on • ECT -20 – 115° C • IAT -20 – 143° C • Case 2: • Engine shut-off-time > 5.0 s • ECT 5.0 – 115° C • IAT 5.0 – 143° C	• 0.3 s • Multiple		
P0641 Sensor Reference Voltage "A" Circuit/ Open	Engine Control Module (ECM): Sensor Reference Circuit A Short Circuit	• Signal voltage < 4.8; > 5.2 V		• 0.5 s • Continuous	• 2 DCY	– If a related sensor voltage code is also set, refer to that code for diagnosis. If no other related codes set, replace the Engine Control Module - J623- . Refer to appropriate repair manual.

Touareg 2011, Generic Scan Tool – Edition 09.2016

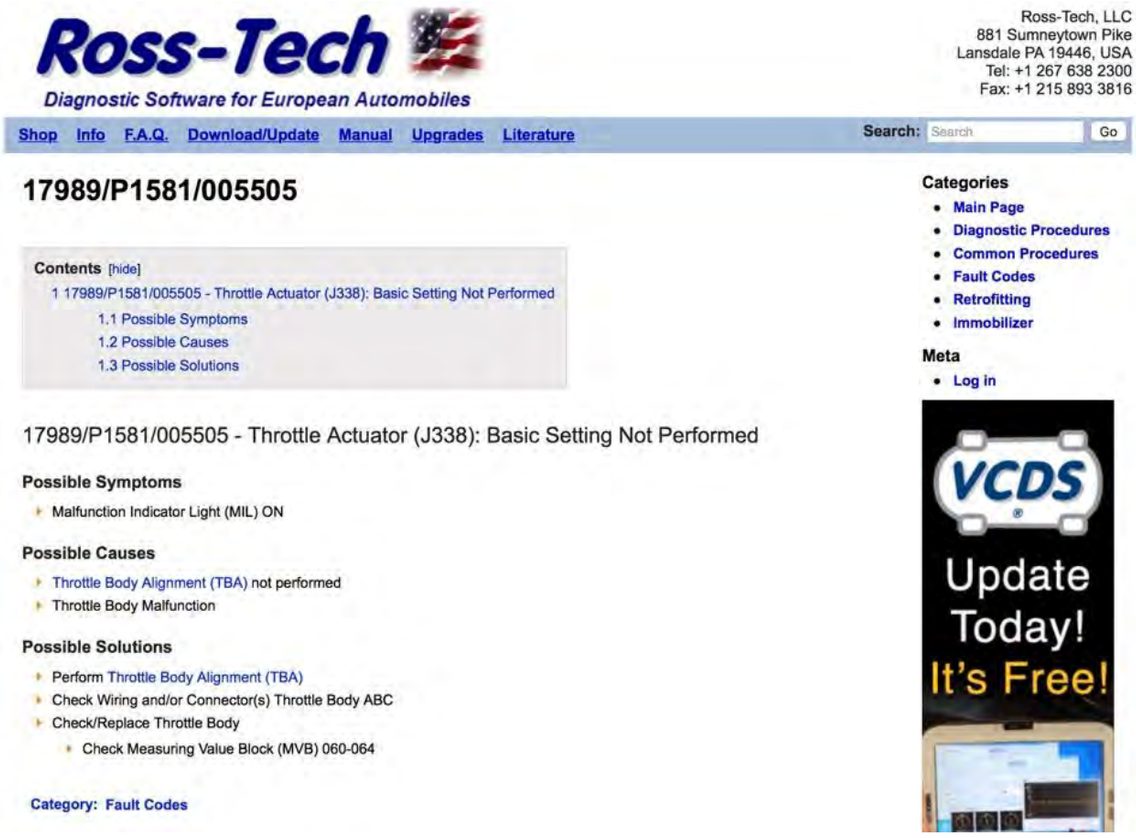

http://wiki.ross-tech.com/wiki/index.php/17989/P1581/005505

For example, as shown above, the positioning device, Throttle Valve Control Module J338, is commanded by Engine Control Module (ECM) J623, to change to a commanded position (upper position or lower position) comprising at least one of the commands to the positioning device to open to a hold open mode (upper position) and one of the commands to the positioning device to close to a hold close mode (mechanical stop low).

On information and belief, the ECM hardware and software perform the step of "commanding the positioning device to at least one of a hold open mode or a hold close mode."

Figure 32

40. Claim 11 of the '804 patent recites a system for controlling a positioning device of an internal combustion engine to prevent overheat conditions, the system comprising: an electric motor for actuating the positioning device with a control effort; a control effort detector coupled to said electric motor and intended to detect said control effort; and a controller coupled to said electric motor and said control effort detector, said controller including control logic

operative to command the positioning device to change to a commanded position, detect a control effort required to change to said commanded position, determine whether said control effort exceeds a threshold for a predetermined time period, and reduce said control effort when said control effort exceeds said threshold for said predetermined time period; wherein said controller further includes control logic operative to command the positioning device to close to said commanded position in a hold close mode.

41. On information and belief, the ’804 patent Accused Instrumentalities infringe claim 11 of the ’804 patent. The ’804 patent Accused Instrumentalities comprise a system for controlling a positioning device of an internal combustion engine to prevent overheat conditions (*Figure 33*), the system comprising: an electric motor for actuating the positioning device with a control effort (*Figure 34*); a control effort detector coupled to said electric motor and intended to detect said control effort (*Figure 35*); and a controller coupled to said electric motor and said control effort detector, said controller including control logic operative to command the positioning device to change to a commanded position, detect a control effort required to change to said commanded position, determine whether said control effort exceeds a threshold for a predetermined time period, and reduce said control effort when said control effort exceeds said threshold for said predetermined time period (*Figure 36*); wherein said controller further includes control logic operative to command the positioning device to close to said commanded position in a hold close mode (*Figures 36-37*).

2.3 Electronic Throttle Control (ETC) System

The electronic throttle control (ETC) system consists of the accelerator-pedal module, the engine control module (ECM), and the electronic throttle body. The electronic throttle body mainly consists of the throttle valve, the electric throttle-valve drive element, and the throttle-valve position sensor (TPS). The drive element is a DC servomotor, which acts on the throttle-valve shaft via a gear unit. The throttle-valve position sensor is a redundant sensor system that detects the position of the throttle valve. The sensors have opposite resistance curves so that the ECM can always cross check the signals to ensure the correct position of the throttle valve is always known.

The driver command is detected by a redundant sensor system in the accelerator-pedal module, and the signal is sent to the engine control module. The engine control module then determines the required throttle-valve position by performing calculations from data measured by sensors such as accelerator pedal position sensor, engine speed sensor and vehicle speed sensor. The actual throttle opening can be more or less in proportion to accelerator pedal position given different engine operating points.

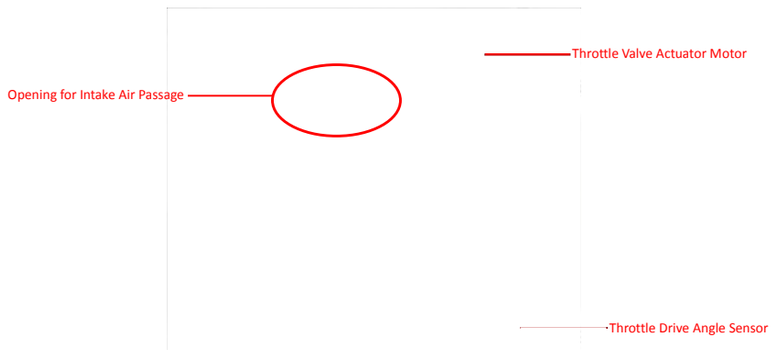

For example, as shown above the Engine Control Module (ECM) J623 controls a positioning device, the Throttle Valve Control Module J338 of an internal combustion engine (VW 3.2L & 3.6L), which comprises a system for controlling a positioning device of an internal combustion engine to prevent overheat condition.

Figure 33

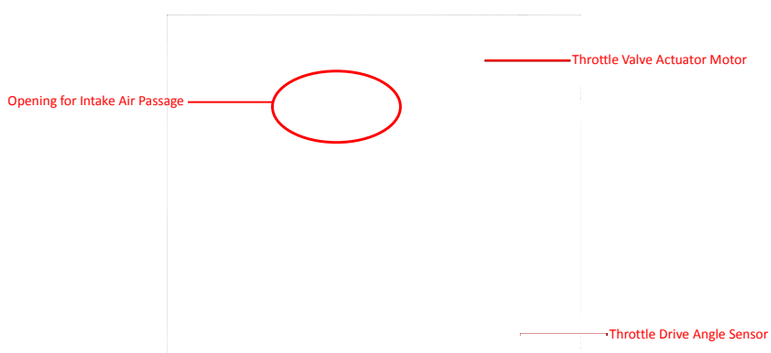

DTC / Description	Monitor Strategy Description	Malfunction Criteria and Threshold Value	Secondary Parameters with Enable Conditions	Monitoring Time Length	MIL Illumination	Component Diagnostic Procedure
P2106 Throttle Actuator Control System - Forced Limited Power	Throttle Actuator Short To Battery Plus / Short To Ground	• Internal check failed		• 0.5 s • Continuous	• 2 DCY	– Check the Throttle Valve Control Module - GX3- . Refer to ⇒ "3.6.32 Throttle Valve Control Module GX3 , Checking", page 893 .
	Throttle Actuator Open Circuit		• Duty cycle > 80.0% • Or • Deviation throttle value angles vs. throttle value set point > 4.0 – 50.0%			
	Throttle Actuator Temperature / Current Monitoring					
	Throttle Actuator Functional Check					

Whole, is not permitted unless authorised by Volkswagen AG. Volkswagen AG does not guarantee or accept any liability with respect to the correctness of information

For example, as shown above, a positioning device, the Throttle Valve Control Module J338 of an internal combustion engine (VW 3.2L & 3.6L), is actuated via a Throttle Valve Actuator Motor with control effort indicated by the amount of current required to actuate the motor.

Figure 34

DTC / Description	Monitor Strategy Description	Malfunction Criteria and Threshold Value	Secondary Parameters with Enable Conditions	Monitoring Time Length	MIL Illumination	Component Diagnostic Procedure
P2106 Throttle Actuator Control System - Forced Limited Power	Throttle Actuator Short To Battery Plus / Short To Ground	• Internal check failed		• 0.5 s • Continuous	• 2 DCY	– Check the Throttle Valve Control Module - GX3- . Refer to ⇒ "3.6.32 Throttle Valve Control Module GX3 , Checking", page 893 .
	Throttle Actuator Open Circuit		• Duty cycle > 80.0% • Or • Deviation throttle value angles vs. throttle value set point > 4.0 – 50.0%			
	Throttle Actuator Temperature / Current Monitoring					
	Throttle Actuator Functional Check					

Whole, is not permitted unless authorised by Volkswagen AG. Volkswagen AG does not guarantee or accept any liability with respect to the correctness of information

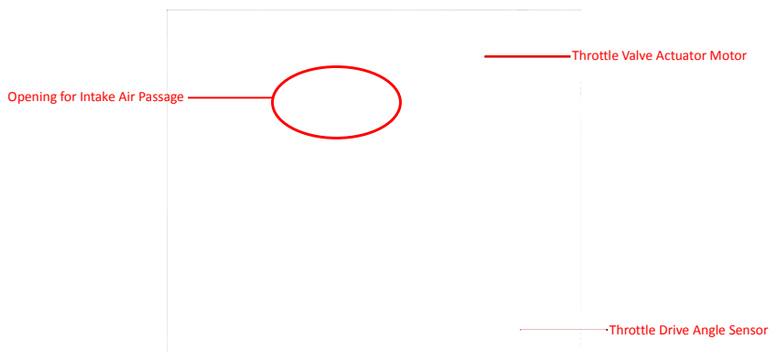

For example, as shown above, a control effort detector in the Engine Control Module (ECM) J623 is coupled to the Throttle Valve Actuator Motor and utilizes a diagnostic strategy (DTC P2106) to detect control effort indicated by the amount of current required to actuate the motor.

Figure 35

DTC / Description	Monitor Strategy Description	Malfunction Criteria and Threshold Value	Secondary Parameters with Enable Conditions	Monitoring Time Length	MIL Illumination	Component Diagnostic Procedure
P2106 Throttle Actuator Control System - Forced Limited Power	Throttle Actuator Short To Battery Plus / Short To Ground	• Internal check failed		• 0.5 s • Continuous	• 2 DCY	– Check the Throttle Valve Control Module - GX3- . Refer to ⇒ "3.6.32 Throttle Valve Control Module GX3 , Checking", page 893 .
	Throttle Actuator Open Circuit		• Duty cycle > 80.0% • Or • Deviation throttle value angles vs. throttle value set point > 4.0 – 50.0%			
	Throttle Actuator Temperature / Current Monitoring					
	Throttle Actuator Functional Check					

Volkswagen AG. Volkswagen AG does not guarantee or accept any liability with respect to the correctness of information

Touareg 2011 ►
Generic Scan Tool - Edition 09.2016

DTC / Description	Monitor Strategy Description	Malfunction Criteria and Threshold Value	Secondary Parameters with Enable Conditions	Monitoring Time Length	MIL Illumination	Component Diagnostic Procedure
	Fuel Pump Control (FPC) Over-Temperature Power Stage		• Engine speed > 80 RPM			
P0638 Throttle Actuator Control Range/ Performance Bank 1	Throttle Actuator Rationality Check Close Movement	• Time to close to reference point > 0.6 s • And • Deviation to reference point > 2.88%	• Engine speed 0 RPM • Vehicle speed 0 km/h • ECT > -20° C • IAT > -20° C • Case 1: • Ignition on • Case 2: • Engine shut-off-time > 5.0 s • Number of checks 3.0 [-]	• 5.0 s • Multiple	• 2 DCY	– Check the Throttle Valve Control Module - GX3- . Refer to = "3.6.32 Throttle Valve Control Module GX3 - Checking", page 893 .
	Throttle Actuator Signal Range Check @ Mechanical Stop Low	TPS 1 signal voltage < 0.40; > 0.80 V Or TPS 2 signal voltage < 4.20; > 4.60 V	• Engine speed 0 RPM • Vehicle speed 0 km/h • Case 1: • Ignition on • ECT -20 – 115° C • IAT -20 – 143° C • Case 2: • Engine shut-off-time > 5.0 s • ECT 5.0 – 115° C • IAT 5.0 – 143° C	• 0.3 s • Multiple		
P0641 Sensor Reference Voltage "A" Circuit/ Open	Engine Control Module (ECM): Sensor Reference Circuit A Short Circuit	• Signal voltage < 4.8; > 5.2 V		• 0.5 s • Continuous	• 2 DCY	– If a related sensor voltage code is also set, refer to that code for diagnosis. If no other related codes set, replace the Engine Control Module - J623- . Refer to appropriate repair manual.

500 Rep. Gr.ST - Generic Scan Tool

For example, as shown above, a control effort detector in the Engine Control Module (ECM) J623 is coupled to the Throttle Valve Actuator Motor and includes software-implemented control logic operative to command the positioning device to change to a commanded position (P0638), detect a control effort required to change to said commanded position (P2106), determine whether said control effort exceeds a threshold (Throttle Actuator Temperature/Current Monitoring), continuously monitor which continuously monitors the Throttle Actuator Control System, for a predetermined time period (Time to close to reference point > 0.6 s), and reduce said control effort when said control effort exceeds said threshold for said predetermined time period.

On information and belief, the ECM hardware and software "reduce[s] said control effort when said control effort exceeds said threshold for said predetermined time period."

Figure 36

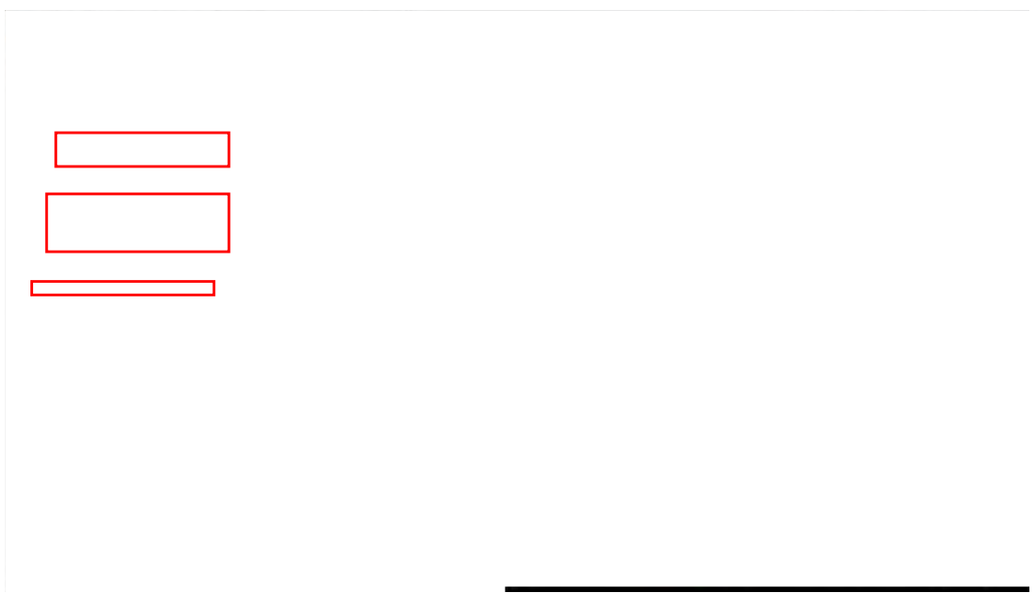

For example, as shown above (and in Figure 36), the Engine Control Module (ECM) J623 is a controller with control logic to command the positioning device, the Throttle Valve Control Module J338, to close to said commanded position in a hold close mode (P0638).

Figure 37

Based upon the totality of the foregoing evidence, and based further upon information and belief, the '804 patent Accused Instrumentalities practice a method for controlling a positioning device of an internal combustion engine, the method comprising the steps of: providing an electric motor for actuating the positioning device; commanding the positioning device to change to a commanded position; detecting a control effort required to change to said commanded position; determining whether said control effort exceeds a threshold for a predetermined time period; and reducing said control effort when said control effort exceeds said threshold for said predetermined time period; wherein commanding the positioning device to change to said commanded position comprises at least one of commanding the positioning device to open to a hold open mode and commanding the positioning device to close to a hold close mode.

COUNT VI – INFRINGEMENT OF U.S. PATENT NO. 6,347,680

42. The allegations set forth in the foregoing paragraphs 1 through 41 are incorporated into this Sixth Claim for Relief.

43. On February 19, 2001, U.S. Patent No. 6,347,680 ("the '680 patent"), entitled "Engine Output Controller," was duly and legally issued by the United States Patent and Trademark Office. A true and correct copy of the '680 patent is attached as Exhibit 6.

44. Plaintiff is the assignee and owner of the right, title and interest in and to the '680 patent, including the right to assert all causes of action arising under said patents and the right to any remedies for infringement of them.

45. Upon information and belief, Defendants have directly infringed at least claim of the '680 patent by making, using, selling, importing and/or providing and causing to be used the 2013-2018 Passat, 2012-2016 CC, 2012-2017 Touareg, 2018-2019 Atlas, and 2012-2016 Porsche Cayenne (the "'680 patent Accused Instrumentalities").

46. In particular, claim 1 of the '680 patent recites an engine output control method for a vehicle having a drive by wire engine system responsive to a desired engine speed signal, the method comprising the steps of: generating a driver demanded engine speed value corresponding to an operator input; generating a speed control system engine speed value corresponding to a predetermined speed value to permit vehicle operation at a constant speed by a speed control system; arbitrating between said driver demanded engine speed value and said speed control system engine speed value to derive a first desired engine speed value; limiting said first desired engine speed value by a vehicle speed limit value, engine speed limit value, and transmission speed limit value to generate a second desired engine speed value; and controlling said engine output as a function of said second desired engine speed value and an actual engine speed value.

47. On information and belief, the ’680 patent Accused Instrumentalities infringe at least claim 1 of the ’680 patent. The ’680 patent Accused Instrumentalities practice an engine output control method for a vehicle having a drive by wire engine system responsive to a desired engine speed signal (*Figure 38*), the method comprising the steps of: generating a driver demanded engine speed value corresponding to an operator input (*Figure 39*); generating a speed control system engine speed value corresponding to a predetermined speed value to permit vehicle operation at a constant speed by a speed control system (*Figure 40*); arbitrating between said driver demanded engine speed value and said speed control system engine speed value to derive a first desired engine speed value (*Figure 4*1); limiting said first desired engine speed value by a vehicle speed limit value, engine speed limit value, and transmission speed limit value to generate a second desired engine speed value (*Figure 42*); and controlling said engine output as a function of said second desired engine speed value and an actual engine speed value (*Figures 38-42*).

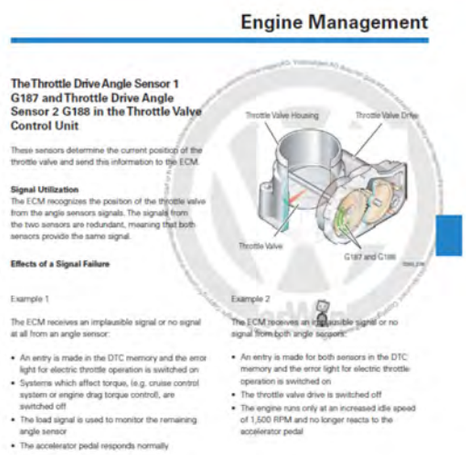

Engine Management

The Throttle Drive Angle Sensor 1 G187 and Throttle Drive Angle Sensor 2 G188 in the Throttle Valve Control Unit

These sensors determine the current position of the throttle valve and send this information to the ECM.

Signal Utilization

The ECM recognizes the position of the throttle valve from the angle sensors signals. The signals from the two sensors are redundant, meaning that both sensors provide the same signal.

Effects of a Signal Failure

Example 1

The ECM receives an implausible signal or no signal at all from an angle sensor:

- An entry is made in the DTC memory and the error light for electric throttle operation is switched on
- Systems which affect torque, (e.g. cruise control system or engine drag torque control), are switched off
- The load signal is used to monitor the remaining angle sensor
- The accelerator pedal responds normally

Example 2

The ECM receives an implausible signal or no signal from both angle sensors:

- An entry is made for both sensors in the DTC memory and the error light for electric throttle operation is switched on
- The throttle valve drive is switched off
- The engine runs only at an increased idle speed of 1,500 RPM and no longer reacts to the accelerator pedal

Throttle Valve Housing

Throttle Valve Drive

Throttle Valve

G187 and G188

The CAN data bus and the ECM (J623), TCM (J217), ABS System (J104) (controllers) practice an engine output control method.

3.6.32 Vehicle Speed Signal, Checking

General Description

The Vehicle Speed Signal or VSS measures Transmission / Transaxle output or Wheel Speed from the ABS System. The signal is broadcasted over the CAN Bus. The Engine Control Module - J623- uses this information to modify engine functions such as ignition timing, A/F ratio, transmission shift points, and to initiate diagnostic routines.

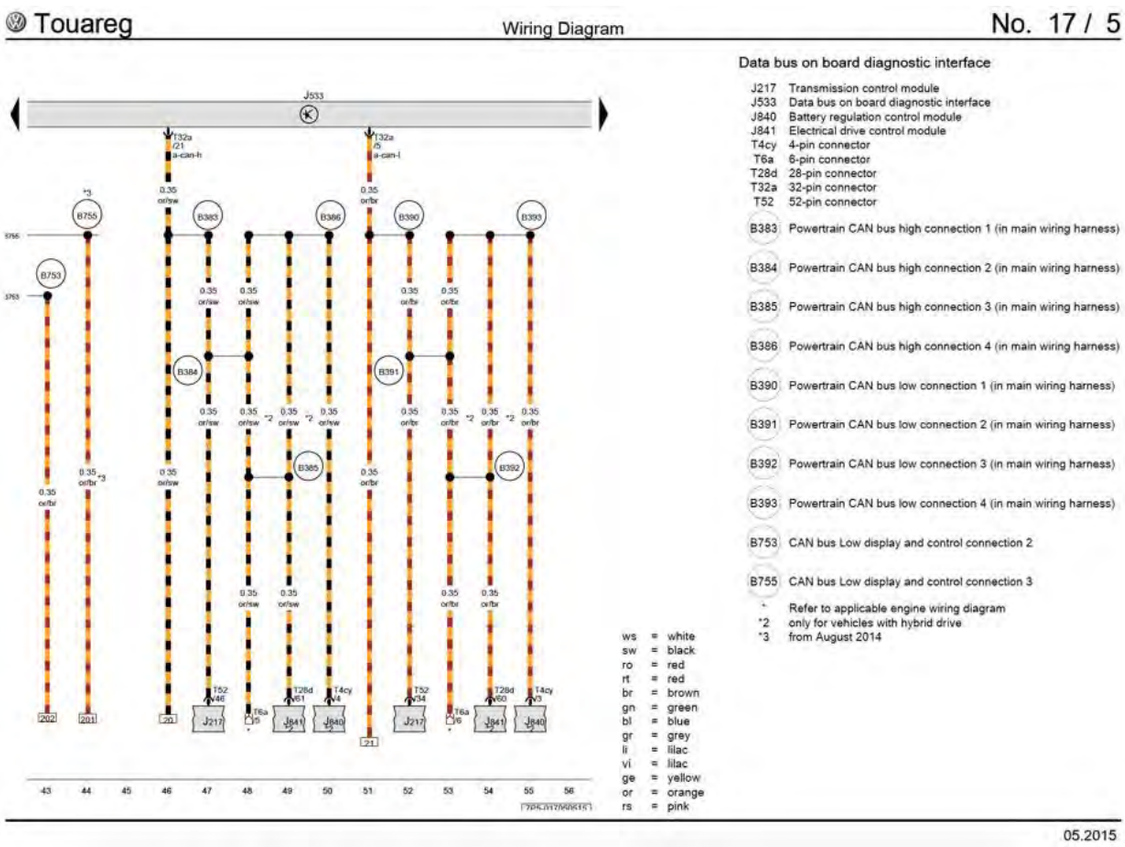

The ’680 patent Accused Instrumentalities comprise a CAN (Controller Area Network) which allows microcontrollers like the Engine Control Module (ECM) J623, Transmission Control Module (TCM), and Antilock Brake System/Electronic Stability Control (ABS/ESC) to communicate with each other.

For example, as shown above, the drive by wire system comprises the Accelerator Pedal Position Sensor 2 G185, Throttle Valve Control Module J338, and other components, and is controlled by the ECM J623.

Figure 38

2.3 Electronic Throttle Control (ETC) System

The electronic throttle control (ETC) system consists of the accelerator-pedal module, the engine control module (ECM), and the electronic throttle body. The electronic throttle body mainly consists of the throttle valve, the electric throttle-valve drive element, and the throttle-valve position sensor (TPS). The drive element is a DC servomotor, which acts on the throttle-valve shaft via a gear unit. The throttle-valve position sensor is a redundant sensor system that detects the position of the throttle valve. The sensors have opposite resistance curves so that the ECM can always cross check the signals to ensure the correct position of the throttle valve is always known.

The driver command is detected by a redundant sensor system in the accelerator-pedal module, and the signal is sent to the engine control module. The engine control module then determines the required throttle-valve position by performing calculations from data measured by sensors such as accelerator pedal position sensor, engine speed sensor and vehicle speed sensor. The actual throttle opening can be more or less in proportion to accelerator pedal position given different engine operating points.

2.4 Electronic Power Control (EPC) Warning Lamp

When the ignition is switched on, the engine control module (ECM) checks the electronic throttle control system for static sys-

12 Rep. Gr.ST - Generic Scan Tool

The ’680 patent Accused Instrumentalities comprise an ECM (J623), which generates a driver demanded engine speed value corresponding to operator input from the Accelerator Pedal Position Sensor 2 (G185).

Figure 39

2015 Volkswagen Touareg (7P5) V6-3.6L (CGRA)
Vehicle » Cruise Control » Description and Operation » Adaptive Cruise Control

ADAPTIVE CRUISE CONTROL

General Information

General Description

Adaptive Cruise Control (ACC) is a cruise control system with distance regulation that influences driving behavior with both active acceleration and deceleration.

The 2010 Touareg has an improved ACC system. The ACC with Front Assist is also known as "Stop and Go". In addition to the current ACC features, the vehicle will resume driving 2 seconds after it has stopped.

Using ACC, any desired speed between 0 km/h and 210 km/h (130.48 mph) can be maintained. In addition, ACC maintains a pre-set time distance to the vehicle ahead.

With active brake intervention, the vehicle can brake to a stop. System-specified thresholds are set and driver intervention is prompted with optical and acoustic warnings when necessary.

The driver assistance system is activated using the front button in the turn signal lever and a selection display in the instrument cluster display. ACC is operated using the multifunction steering wheel buttons or, on vehicles without multifunction steering wheel, using the front rocker switch in the windshield wiper lever. While driving, important information is shown in the instrument cluster display.

Malfunction Recognition And Malfunction Indicator

Distance Regulation Control Module (J428) is equipped with On Board Diagnostics (OBD) which assists troubleshooting.

The "Guided Fault Finding" function is to be used for troubleshooting of one of the systems described as in chapter "Vehicle Diagnosis, Testing and Information System".

Start the ACC when first using the or replacing the Distance Regulation Control Module (J428). Refer to (Automatic Distance Regulation, Initializing | See: Testing and Inspection/Automatic Distance Regulation, Initializing.

Automatic Distance Regulation, Adapting

- Distance Regulation Control Module (J428)
- Distance Regulation Control Module 2 (J850)
- Adaptive Cruise Control Button (E337) inside the turn signal switch
- Image Processing Control Module (J851). Refer to [Image Processing Control Module (J851) | See: Accessories and Optional Equipment/Collision Avoidance Module/Description and Operation/Image Processing Control Module (J851)
- Depending on equipment, for adjusting ACC, the multifunction steering wheel buttons or
- The front rocker switch on the windshield wiper lever

© 2018 ALLDATA LLC. All rights reserved. Terms and Conditions

2015 Volkswagen Touareg (7P5) V6-3.6L (CGRA)
Vehicle » Cruise Control » Service and Repair

SERVICE AND REPAIR

Overview - Adaptive Cruise Control (ACC)

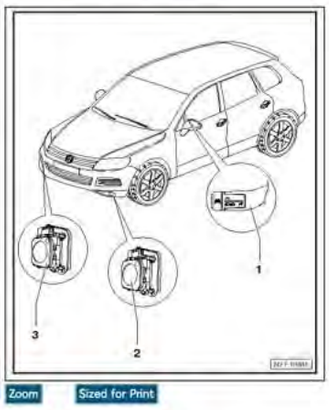

Zoom Sized for Print

1 - Adaptive Cruise Control Button (E357)

The Adaptive Cruise Control Button (E357) is a component in the turn signal switch on the steering column.

Turn signal switch on steering column, removing and installing. Refer to [Steering Column Switch Module] See: Accessories and Optional Equipment\Steering Mounted Controls Communication Module\Description and Operation

2 - Distance Regulation Control Module 2 (J850)

- Contains Adaptive Cruise Control Sensor 2
- Removing and installing. Refer to [Distance Regulation Control Module (J428), Removing and Installing] See: Cruise Control Module\Description and Operation\Distance Regulation Control Module (J428), Removing and Installing

3 - Distance Regulation Control Module (J428)

- Contains Adaptive Cruise Control Sensor (G550)
- Removing and installing. Refer to [Distance Regulation Control Module (J428)] See: Cruise Control Module\Description and Operation

© 2018 ALLDATA LLC. All rights reserved. Terms and Conditions

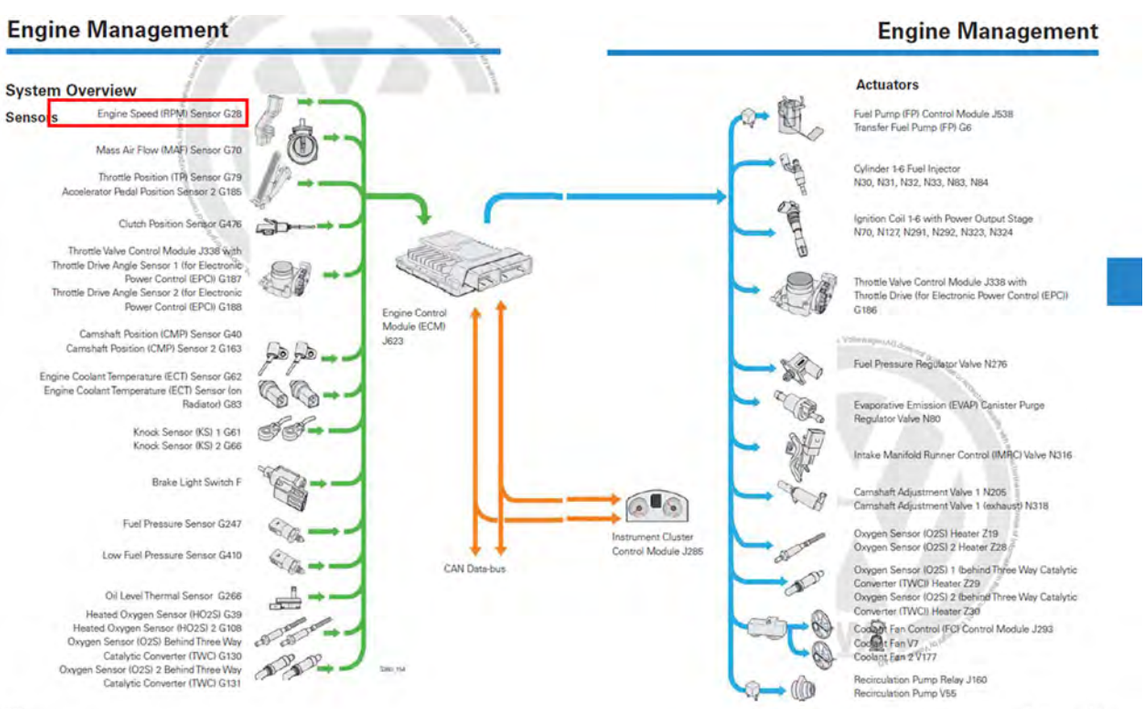

3.6.32 Vehicle Speed Signal, Checking

General Description

The Vehicle Speed Signal or VSS measures Transmission / Transaxle output or Wheel Speed from the ABS System. The signal is broadcasted over the CAN Bus. The Engine Control Module - J623- uses this information to modify engine functions such as ignition timing, A/F ratio, transmission shift points, and to initiate diagnostic routines.

2015 Volkswagen Touareg (7P5) V6-3.6L (CGRA)

Vehicle » Cruise Control » Description and Operation » General Information

GENERAL INFORMATION

General Information

Cruise control system functions are controlled by the Engine Control Module (ECM).

Cruise control is operated with 2 button blocks in the multifunction steering wheel or, on vehicles without a multifunction steering wheel, with front rocker switch in windshield washer lever.

- Perform assembly work at multifunction steering wheel.
- Perform assembly work on windshield wiper lever. Refer to [Steering Column Switch Module] See: Accessories and Optional Equipment\Steering Mounted Controls Communication Module\Description and Operation
- Cruise control system can be activated/deactivated. Refer to [Cruise Control System, Activating and Deactivating] See: Testing and Inspection\Cruise Control System, Activating and Deactivating.

Malfunction Recognition and Malfunction Indicator:

Diagnostic Trouble Code (DTCs) in conjunction with Cruise control system are transmitted via ECM and via Steering Column Electronic Systems Control Module (J527).

The "Guided Fault Finding" function is to be used for troubleshooting of one of the systems described as in chapter "Vehicle Diagnosis, Testing and Information System".

© 2018 ALLDATA LLC. All rights reserved. Terms and Conditions

For example, as shown above, the adaptive cruise control (ACC) is a cruise control system with speed regulation that influences driving behavior with both active acceleration and deceleration. Upon information and belief, using ACC, any desired speed between 0 km/hr and 210 km/hr can be maintained. System-specified thresholds are set during operation of the ACC; the ECM (J623) generates an engine speed value to maintain vehicle operation at a constant speed based on the predetermined speed value from the set/coast switch of the cruise control system.

Figure 40

2.5 Engine Control Module (ECM)

The Engine Control Module (ECM) is a generic term for any embedded system that controls one or more of the electrical systems or subsystems in a vehicle. It controls a series of actuators on an internal combustion engine to ensure that driver commands (e.g. to accelerate) are translated into appropriate engine performance. It reads values from a multitude of sensors, interprets the data, and adjusts the engine actuators accordingly. The ECM also interacts with the transmission control module (TCM), ABS/traction/stability control module and other vehicle function related control systems.

ECM controlled systems and functions (performance and emission related) will be introduced in the following chapters. These include the OBD system, controller area network (CAN), throttle control module, fuel supply, ignition, variable valve timing, exhaust-gas recirculation, secondary air injection, exhaust system, and EVAP system.

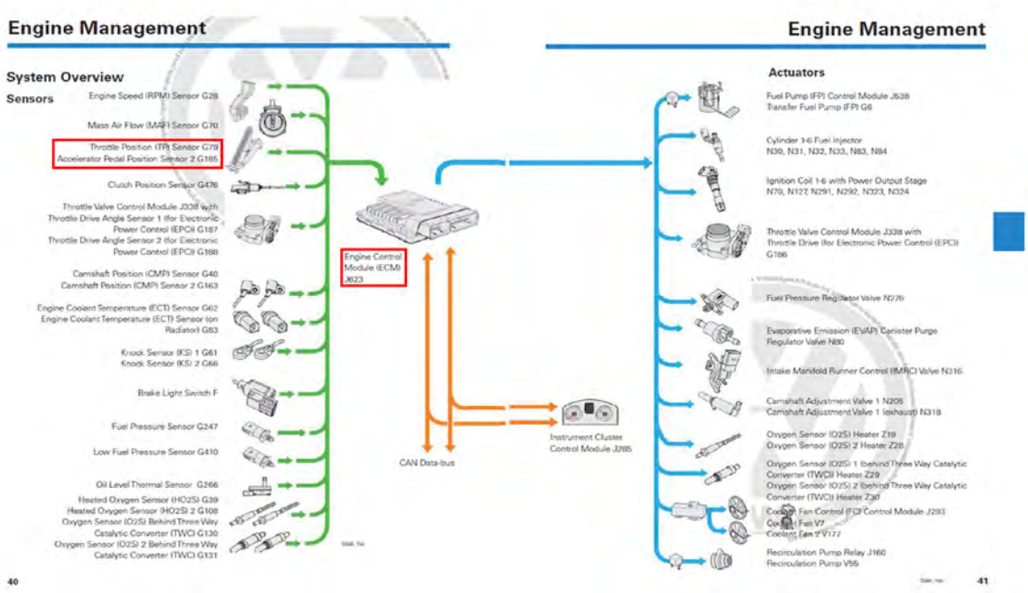

Upon information and belief, the ECM (J623) receives signals from sensors. Accelerator Pedal Position Sensor 2 (G185), which determine the driver demanded engine speed value. The speed control system engine speed value is determined by the ECM based upon the set speed of the cruise control. The engine management system (a drive by wire system) arbitrates between the driver demanded engine speed value and said speed control system engine speed value to derive a first desired engine speed value.

Figure 41

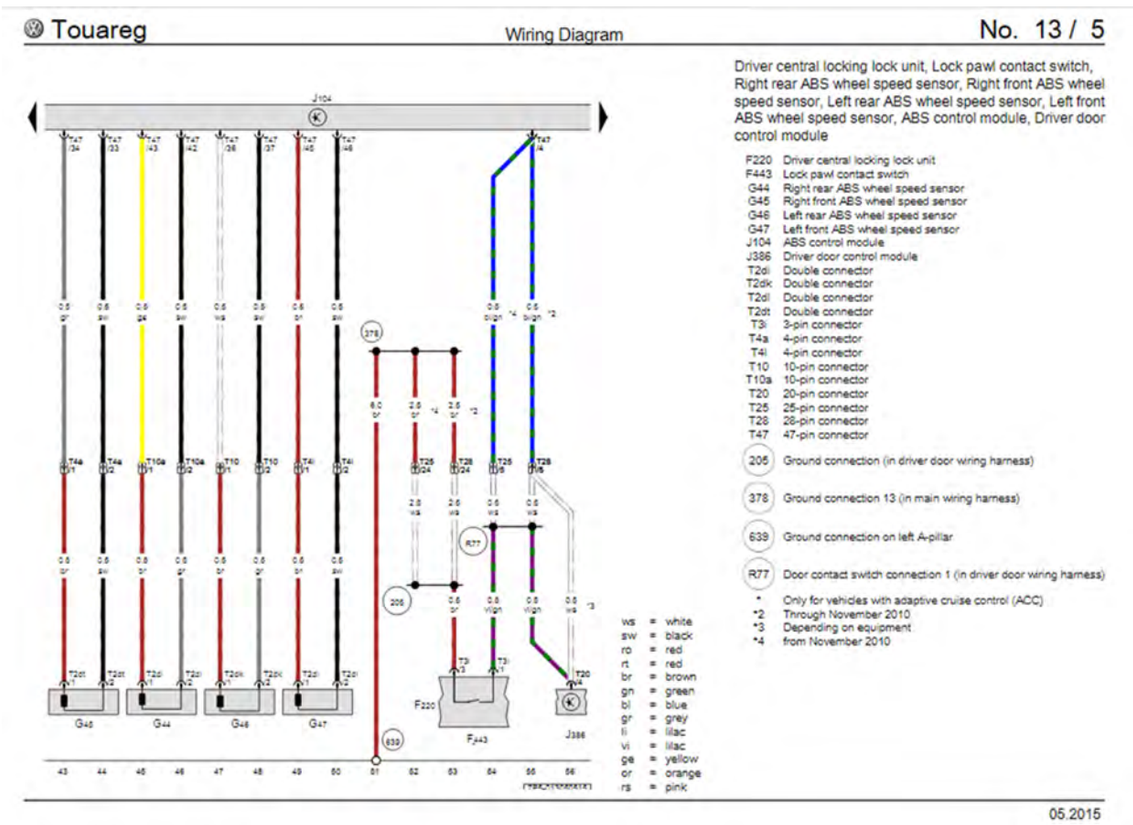

Upon information and belief, the first desired engine speed value limited by an engine speed limit value determined by the ECM based on various monitored conditions (e.g. road conditions; driving conditions).

2015 Volkswagen Touareg (7P5) V6-3.6L (CGRA)
Vehicle » Cruise Control » Description and Operation » Adaptive Cruise Control

ADAPTIVE CRUISE CONTROL

General Information

General Description

Adaptive Cruise Control (ACC) is a cruise control system with distance regulation that influences driving behavior with both active acceleration and deceleration.

The 2010 Touareg has an improved ACC system. The ACC with Front Assist is also known as "Stop and Go". In addition to the current ACC features, the vehicle will resume driving 2 seconds after it has stopped.

Using ACC, any desired speed between 0 km/h and 210 km/h (130.49 mph) can be maintained. In addition, ACC maintains a pre-set time distance to the vehicle ahead.

With active brake intervention, the vehicle can brake to a stop. System-specified thresholds are set and driver intervention is prompted with optical and acoustic warnings when necessary.

The driver assistance system is activated using the front button in the turn signal lever and a selection display in the instrument cluster display. ACC is operated using the multifunction steering wheel buttons or, on vehicles without multifunction steering wheel, using the front rocker switch in the windshield wiper lever. While driving, important information is shown in the instrument cluster display.

Malfunction Recognition And Malfunction Indicator

Distance Regulation Control Module (J428) is equipped with On Board Diagnostics (OBD) which assists troubleshooting.

The "Guided Fault Finding" function is to be used for troubleshooting of one of the systems described as in chapter "Vehicle Diagnosis, Testing and Information System".

Start the ACC when first using the or replacing the Distance Regulation Control Module (J428). Refer to [Automatic Distance Regulation, Initializing] See: Testing and Inspection/Automatic Distance Regulation, Initializing.

Automatic Distance Regulation, Adapting

- Distance Regulation Control Module (J428)
- Distance Regulation Control Module 2 (J860)
- Adaptive Cruise Control Button (E537) inside the turn signal switch
- Image Processing Control Module (J851). Refer to [Image Processing Control Module (J851)] See: Accessories and Optional Equipment/Collision Avoidance Module/Description and Operation/Image Processing Control Module (J851)
- Depending on equipment, for adjusting ACC, the multifunction steering wheel buttons or
- The front rocker switch on the windshield wiper lever.

© 2018 ALLDATA LLC. All rights reserved. Terms and Conditions

Upon information and belief, the first desired engine speed value is further limited by a transmission speed limit value based on transmission torque capacity limits which is monitored by the Transmission Control Module (J217).

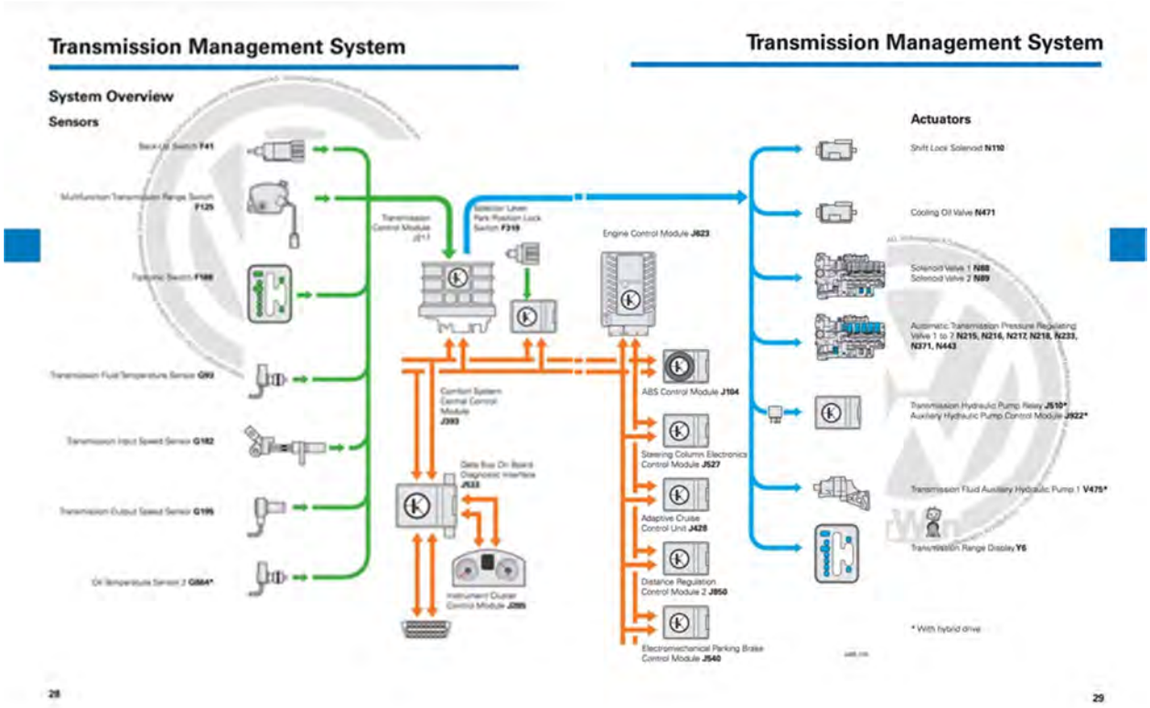

Transmission Management System

The Transmission Control Module J217

The Transmission Control Module J217 is located under the right front seat. It is connected to the gateway via the powertrain CAN - bus.

J217 receives information from the sensors inside of the transmission and actuates the solenoid valves in the valve body.

If equipped with the Transmission Fluid Auxiliary Hydraulic Pump 1 V475, the Oil Temperature Sensor 2 G664 transmits the operating temperature of the pump.

The dynamic shift program is also integrated into J217. It selects gear changes based on the operating status (aerodynamic drag and rolling resistance and driving style).

J217 under the right front seat

Upon information and belief, the first desired engine speed value is limited by a vehicle speed limit value, engine speed limit value, and transmission speed limit value to generate a second

desired engine speed value which is generated when a lower engine speed value is desired due to various system capacities or limits as shown above (e.g. transmission torque capacity below).

Introduction

Technical Data

Developer/ Manufacturer	AISIN AW CO. LTD Japan
Designation	• Automatic transmission 0C8
Transmission Features	• Electrohydraulically controlled 8-speed planetary transmission with a simple primary planetary gear set and a Ravigneaux planetary gear set • Torque converter with slip-controlled torque converter lock-up clutch • Designed for longitudinal installation in combination with a transfer case
Control System	• Hydraulic control unit (valve body) in the oil sump with external electronic control module • Dynamic Shift Program DSP with separate sports program in "position S" and "Tiptronic" mode for manual gear changes • Special feature: Starting off in 2nd gear is possible in Tiptronic mode
Torque	Depending on version, up to 737 lb/ft (1000 Nm)
Service	For fluid maintenance and intervals, see ElsaWeb
Weight	Depending on adaptation of the transmission to the engine, between 200 and 240 lb (91 and 108 kg)
Speed	Depending on engine, the top speed can be achieved in 6th, 7th or 8th gear

As stated above, the first desired engine speed value is determined via the ECM (J623).

Upon information and belief, the first desired engine speed value is limited by a vehicle speed limit value which is generated from the ABS control module (J104) based on conditions such as wheel slippage from the wheel speed sensors (J44-47) communicated via the CAN data-bus (shown above).

For example, as shown above the CAN Data bus and ECM (J623) control the drive by wire system by calculating engine output as a function of said second desired engine speed value and an actual speed value. Necessarily, the second desired speed value must be reconciled with the actual engine speed value, thereby controlling the commanded throttle position and resultant engine output.

Figure 42

Based upon the totality of the foregoing evidence, and based further upon information and belief, the ’680 patent Accused Instrumentalities practice “an engine output control method for a vehicle having a drive by wire engine system responsive to a desired engine speed signal, the method comprising the steps of: generating a driver demanded engine speed value corresponding to an operator input; generating a speed control system engine speed value corresponding to a

predetermined speed value to permit vehicle operation at a constant speed by a speed control system; arbitrating between said driver demanded engine speed value and said speed control system engine speed value to derive a first desired engine speed value; limiting said first desired engine speed value by a vehicle speed limit value, engine speed limit value, and transmission speed limit value to generate a second desired engine speed value; and controlling said engine output as a function of said second desired engine speed value and an actual engine speed value."

COUNT VII – INFRINGEMENT OF U.S. PATENT NO. 6,561,166

48. The allegations set forth in the foregoing paragraphs 1 through 47 are incorporated into this Seventh Claim for Relief.

49. On May 13, 2003, U.S. Patent No. 6,561,166 ("the '166 patent"), entitled "Purge Fuel Canister Measurement Method and System," was duly and legally issued by the United States Patent and Trademark Office. A true and correct copy of the '166 patent is attached as Exhibit 7.

50. Plaintiff is the assignee and owner of the right, title and interest in and to the '166 patent, including the right to assert all causes of action arising under said patents and the right to any remedies for infringement of them.

51. Upon information and belief, Defendants have directly infringed at least claim1 of the '166 patent by making, using, selling, importing and/or providing and causing to be used the 2012-2018 Tiguan, 2012-2018 Audi A3, 2012-2018 Audi A4, 2012-2018 Audi A5, 2012-2018 Audi A6, 2016-2018 Audi TT, 2015-2018 Audi S3, 2015-2018 VW Golf, 2012-2018 VW Golf GTI, 2015-2018 VW Golf R, 2015-2018 Golf Sportwagon, 2013-2018 Jetta GLI, 2014-2018 VW Jetta Sedan, 2014-2018 VW Passat, 2012-2017 WV CC, 2012-2018 VW Beetle, 2018 VW Atlas, 2015- 2018 Audi Q3, 2012-2018 Audi Q5, and 2017-2018 Porsche Macan with the EA888 engines (the "'166 patent Accused Instrumentalities").

52. In particular, claim 1 of the '166 patent recites a method of controlling a direct injection spark ignited internal combustion engine that is capable of operating in a stratified mode where fuel is injected during a compression stroke of the engine and a homogeneous mode

where fuels is injected during an intake stroke of the engine, the internal combustion engine having a catalytic converter and an NOx trap, comprising: measuring a first temperature of an NOx trap that is in contact with an exhaust gas exhausted from a combustion chamber while the engine is operating in the stratified mode; enabling evaporated fuel vapors to enter the combustion chamber at a flow rate while the engine is operating in the stratified mode; measuring a second temperature of the NOx trap while the engine is operating in the stratified mode; and adjusting the flow rate of the evaporated fuel vapors as a function of the second temperature when the second temperature is within a lower temperature threshold and an upper temperature threshold.

53. On information and belief, the ’166 patent Accused Instrumentalities infringe at least claim 1 of the ’166 patent. The ’166 patent Accused Instrumentalities practice a method of controlling a direct injection spark ignited internal combustion engine (*Figure 43*) that is capable of operating in a stratified mode (*Figure 44*) where fuel is injected during a compression stroke of the engine (*Figure 45*) and a homogeneous mode where fuels is injected during an intake stroke of the engine, the internal combustion engine having a catalytic converter (*Figure 46*) and an NOx trap (*Figure 47*), comprising: measuring a first temperature of an NOx trap that is in contact with an exhaust gas exhausted from a combustion chamber while the engine is operating in the stratified mode (*Figures 48*); enabling evaporated fuel vapors to enter the combustion chamber at a flow rate while the engine is operating in the stratified mode (*Figure 49*); measuring a second temperature of the NOx trap while the engine is operating in the stratified mode (*Figure 50*); and adjusting the flow rate of the evaporated fuel vapors as a function of the second temperature when the second temperature is within a lower temperature threshold and an upper temperature threshold (*Figure 51*).

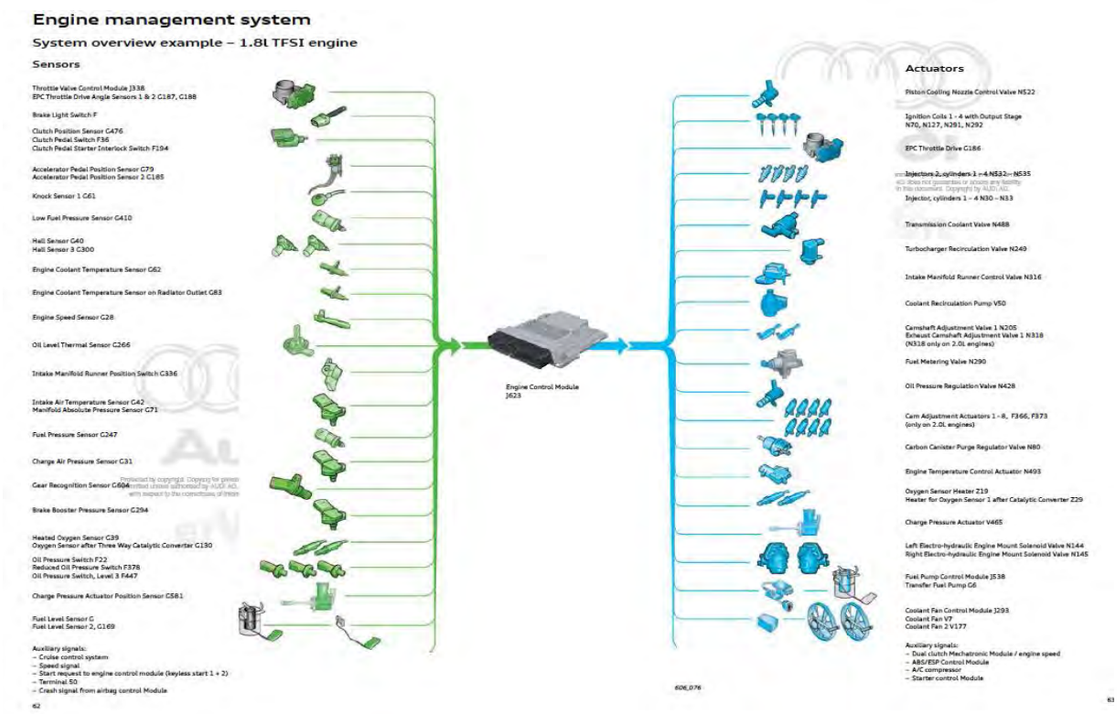

As shown above, the Engine Management System including the Engine Control Module (ECM; J623) controls the Audi 1.8L and 2.0L Third Generation EA888 Engines (direct injection spark ignited internal combustion engine). The ’166 patent Accused Instrumentalities comprise the Audi 1.8L and 2.0L Third Generation EA888 Engines.

Figure 43

Direct Injection

Injectors in directly injected (DI) engines are mounted on the cylinder head and fuel is injected directly into the engine's combustion chamber. In order to overcome the pressure in the combustion chamber during compression and power stroke, injectors often operate at a primary pressure as high as 3000 psi. At such extreme pressure level, no single fuel pump can supply the required pressure directly from the fuel tank to the injectors. Instead, a low-pressure and a high-pressure system are employed. The low-pressure system principally utilizes the same fuel systems and components for multiport injected engines. The high-pressure system consists of a high-pressure fuel pump driven directly by the camshaft, a fuel rail (high-pressure accumulator), a high-pressure sensor and, depending on the system, a pressure-control valve or a pressure limiter. The injectors are operated by the ECM to send a precise amount of fuel from the high-pressure rail directly into the combustion chamber.

The distinctive difference between direct injection and other injection methods is that direct injection offers the flexibility regarding when in the combustion cycle the fuel is added and how. MPI systems can only add fuel during induction; A DI system can add fuel whenever it needs to. For example, fuel can be added during induction to create a homogeneous charge then added again after ignition to enhance power delivery under full load conditions.

VW/Audi Fuel Stratified Injection (FSI)

The goal of a stratified-charge operation is to form an ignitable mixture near the spark plug at the instant of ignition. This means that, instead of supplying the corresponding stoichiometric fuel quantity to the amount of air in the combustion chamber, the fuel interacts only with a portion of the air before it is conveyed to the spark plug. The rest of the fresh air surrounds the stratified charge allowing an ultra-lean condition with air-fuel ratio exceeding 50:1 in some instances. As less fuel is used to "burn" more air, stratified injection helps to further reduce fuel consumption when the engine is operating in low-load conditions (e.g. highway cruising). This is created by designing the combustion chamber so that a "swirling" effect of the air-fuel charge is caused.

2.9 Ignition and Timing

Ignition

A spark ignition (SI) engine requires a spark to initiate combustion in the combustion chamber. Voltage is supplied to the spark plug where the electricity will arc across a gap at a voltage as high as 100 kilovolts. The ECM determines the precise moment to fire each spark plug using ignition logic which is pre-programmed into the ECM as a function of engine speed and load. An optimally calibrated ignition system ensures consistent and reliable ignition under all conditions. Knock or misfire as a result of incorrect ignition can lead to destruction of engine components or damage of the catalytic converter.

Timing

Shifts in the moment of ignition (ignition timing) can result in increased emissions, decreased performance and fuel economy. Whereas more spark advance improves power and fuel economy, it also raises HC and NOx emissions. Excessive spark advance can cause engine knock which is potentially destructive to engines. If the ECM detects knock from a signal sent by a knock sensor, it will delay (retard) the timing of the spark. Excessive spark retard lowers power output and produces high exhaust temperatures, which can also harm the engine. Carefully designed ignition logic provides optimum timing that best balances performance, fuel economy and emissions.

As shown above, the 1.8L and 2.0L TFSI engines are capable of operating in the stratified mode.

Figure 44

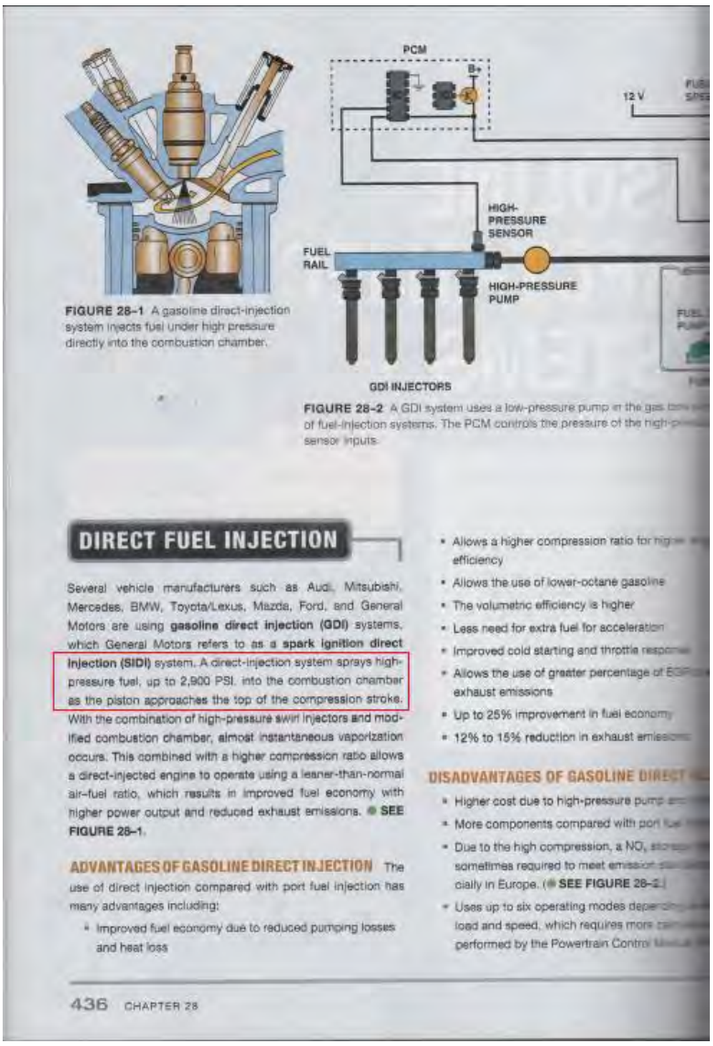

FIGURE 28–1 A gasoline direct-injection system injects fuel under high pressure directly into the combustion chamber.

FIGURE 28–2 A GDI system uses a low-pressure pump in the gas tank of fuel-injection systems. The PCM controls the pressure of the high-p sensor inputs.

DIRECT FUEL INJECTION

Several vehicle manufacturers such as Audi, Mitsubishi, Mercedes, BMW, Toyota/Lexus, Mazda, Ford, and General Motors are using **gasoline direct injection (GDI)** systems, which General Motors refers to as a **spark ignition direct injection (SIDI)** system. A direct-injection system sprays high-pressure fuel, up to 2,900 PSI, into the combustion chamber as the piston approaches the top of the compression stroke. With the combination of high-pressure swirl injectors and modified combustion chamber, almost instantaneous vaporization occurs. This combined with a higher compression ratio allows a direct-injected engine to operate using a leaner-than-normal air–fuel ratio, which results in improved fuel economy with higher power output and reduced exhaust emissions. **SEE FIGURE 28–1.**

ADVANTAGES OF GASOLINE DIRECT INJECTION The use of direct injection compared with port fuel injection has many advantages including:

- Improved fuel economy due to reduced pumping losses and heat loss
- Allows a higher compression ratio for higher efficiency
- Allows the use of lower-octane gasoline
- The volumetric efficiency is higher
- Less need for extra fuel for acceleration
- Improved cold starting and throttle response
- Allows the use of greater percentage of EGR exhaust emissions
- Up to 25% improvement in fuel economy
- 12% to 15% reduction in exhaust emissions

DISADVANTAGES OF GASOLINE DIRECT

- Higher cost due to high-pressure pump
- More components compared with port fuel
- Due to the high compression, a NO_x sometimes required to meet emission cially in Europe. (**SEE FIGURE 28–2.**)
- Uses up to six operating modes load and speed, which requires more performed by the Powertrain Control

436 CHAPTER 28

James D Halderman, *Automotive Engine Performance* 436 (5 ed. 2017)

For example, as suggested by the image above, the ’166 patent Accused Instrumentalities inject fuel during the compression stroke as is common in a Gasoline Direct Injection (GDI) systems. The Audi 1.8L & 2.0L engines are a GDI engine.

Figure 45

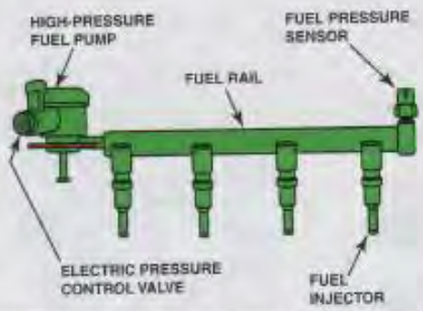

FIGURE 28–5 A gasoline direct-injection (GDI) fuel rail and pump assembly with the electric pressure control valve.

The PCM uses internal drivers to control the power feed and ground for the pressure control valve. When both PCM drivers are deactivated, the inlet valve is held open by spring pressure. This causes the high pressure fuel pump to default to low-pressure mode. The fuel from the high-pressure fuel pump flows through a line to the fuel rail and injectors. The actual operating pressure can vary from as low as 500 PSI (3,440 kPa) at idle to over 2,000 PSI (13,800 kPa) during high speed or heavy load conditions. ● **SEE FIGURE 28–5.**

NOTE: Unlike a port fuel-injection system, a gasoline direct injection system varies the fuel pressure to achieve greater fuel delivery using a very short pulse time, which is usually less than one millisecond. To summarize:

- **Port Fuel Injection = constant fuel pressure but variable injector pulse-width.**
- **GDI = almost constant injector pulse-width with varying fuel pressure.**

GASOLINE DIRECT-INJECTION FUEL INJECTORS

Each high-pressure fuel injector assembly is an electrically magnetic injector mounted in the cylinder head. In the GDI system, the PCM controls each fuel injector with 50 to 80 volts (usually 60 to 70 volts), depending on the system, which is created by a boost capacitor in the PCM. During the high-voltage boost phase, the capacitor is discharged through an injector, allowing for initial injector opening. The injector is then held open with 12 volts. The high-pressure fuel injector has a small slit or six precision-machined holes that generate the desired spray pattern. The injector also has an extended tip to allow for cooling from a water jacket in the cylinder head.

● **SEE CHART 28–1** for an overview of the differences between a port fuel-injection system and a gasoline direct-injection system.

PORT FUEL-INJECTION SYSTEM COMPARED WITH GDI SYSTEM

	PORT FUEL INJECTION	GASOLINE DIRECT INJECTION
Fuel pressure	35–60 PSI	Lift pump—50 to 60 PSI High-pressure pump—500 to 2,900 PSI
Injection pulse width at idle	1.5–3.5 ms	About 0.4 ms (400 µs)
Injector resistance	12–16 ohms	1–3 ohms
Injector voltage	6 V for low-resistance injectors, 12 V for most injectors	50–90 V
Number of injections per event	One	1–3
Engine compression ratio	8:1–11:1	11:1–13:1

CHART 28–1

A comparison chart showing the major differences between a port fuel-injection system and a gasoline direct-injection system.

MODES OF OPERATION

The two basic modes of operation include:

1. **Stratified mode.** In this mode of operation, the air-fuel mixture is richer around the spark plug than it is in the rest of the cylinder.
2. **Homogeneous mode.** In this mode of operation, the air-fuel mixture is the same throughout the cylinder.

There are variations of these modes that can be used to fine-tune the air-fuel mixture inside the cylinder. For example, Bosch, a supplier to many vehicle manufacturers, uses the following six modes of operation:

- **Homogeneous mode.** In this mode, the injector is pulsed one time to create an even air–fuel mixture in the cylinder. The injection occurs during the intake stroke. This mode is used during high-speed and/or high-torque conditions.
- **Homogeneous lean mode.** Similar to the homogeneous mode except that the overall air-fuel mixture is slightly lean for better fuel economy. The injection occurs during the intake stroke. This mode is used under steady, light load conditions.
- **Stratified mode.** In this mode of operation, the injection occurs just before the spark occurs resulting in lean combustion, reducing fuel consumption.
- **Homogeneous stratified mode.** In this mode, there are two injections of fuel:

James D Halderman, *Automotive Engine Performance* 438 (5 ed. 2017)

Direct Injection

Injectors in directly injected (DI) engines are mounted on the cylinder head and fuel is injected directly into the engine's combustion chamber. In order to overcome the pressure in the combustion chamber during compression and power stroke, injectors often operate at a primary pressure as high as 3000 psi. At such extreme pressure level, no single fuel pump can supply the required pressure directly from the fuel tank to the injectors. Instead, a low-pressure and a high-pressure system are employed. The low-pressure system principally utilizes the same fuel systems and components for multiport injected engines. The high-pressure system consists of a high-pressure fuel pump driven directly by the camshaft, a fuel rail (high-pressure accumulator), a high-pressure sensor and, depending on the system, a pressure-control valve or a pressure limiter. The injectors are operated by the ECM to send a precise amount of fuel from the high-pressure rail directly into the combustion chamber.

The distinctive difference between direct injection and other injection methods is that direct injection offers the flexibility regarding when in the combustion cycle the fuel is added and how. MPI systems can only add fuel during induction; A DI system can add fuel whenever it needs to. For example, fuel can be added during induction to create a homogeneous charge then added again after ignition to enhance power delivery under full load conditions.

VW/Audi Fuel Stratified Injection (FSI)

The goal of a stratified-charge operation is to form an ignitable mixture near the spark plug at the instant of ignition. This means that, instead of supplying the corresponding stoichiometric fuel quantity to the amount of air in the combustion chamber, the fuel interacts only with a portion of the air before it is conveyed to the spark plug. The rest of the fresh air surrounds the stratified charge allowing an ultra-lean condition with air-fuel ratio exceeding 50:1 in some instances. As less fuel is used to "burn" more air, stratified injection helps to further reduce fuel consumption when the engine is operating in low-load conditions (e.g. highway cruising). This is created by designing the combustion chamber so that a "swirling" effect of the air-fuel charge is caused.

2.9 Ignition and Timing

Ignition

A spark ignition (SI) engine requires a spark to initiate combustion in the combustion chamber. Voltage is supplied to the spark plug where the electricity will arc across a gap at a voltage as high as 100 kilovolts. The ECM determines the precise moment to fire each spark plug using ignition logic which is pre-programmed into the ECM as a function of engine speed and load. An optimally calibrated ignition system ensures consistent and reliable ignition under all conditions. Knock or misfire as a result of incorrect ignition can lead to destruction of engine components or damage of the catalytic converter.

Timing

Shifts in the moment of ignition (ignition timing) can result in increased emissions, decreased performance and fuel economy. Whereas more spark advance improves power and fuel economy, it also raises HC and NOx emissions. Excessive spark advance can cause engine knock which is potentially destructive to engines. If the ECM detects knock from a signal sent by a knock sensor, it will delay (retard) the timing of the spark. Excessive spark retard lowers power output and produces high exhaust temperatures, which can also harm the engine. Carefully designed ignition logic provides optimum timing that best balances performance, fuel economy and emissions.

For example, a homogeneous mode may be used during high load operation. As shown above, fuel is injected during an intake stroke of the GDI engine.

Figure 46

the vehicle (often underneath the rear bumper). A passenger-car exhaust system consists of the following; exhaust manifold, exhaust treatment components, sound absorption components and the system of pipes connecting these components.

Exhaust Manifold

The manifold is an important component in the exhaust system. It routes the exhaust gas out of the cylinder outlet ports into the subsequent exhaust system. The geometry of the manifold (i.e. length and cross-section of the individual pipes) has an impact on the performance characteristics, the acoustic behavior of the exhaust system, and the exhaust temperature. In some cases, the manifold is insulated with an air gap to quickly reach high exhaust temperature and to shorten the time taken by the catalytic converter to reach its operating temperature.

Emission Control

The primary emission control component is the catalytic converter, which breaks down the gaseous pollutants in the exhaust gas (CO, HC and NOx). Catalytic converters are installed as close as possible to the engine so that they can quickly reach their operating temperature and therefore be effective in urban driving. It also bears a sound-absorbing function, especially to the higher frequency portion of the engine combustion noise.

Sound Absorption

Mufflers dampen or absorb the noise produced by engine combustion. In principle, they can be installed at any position in the exhaust system. However, they are mostly located in the middle and rear sections of the exhaust system. Depending on the number of cylinders and engine output, generally 1 to 3 mufflers are used in an exhaust system. In V-engines, the left and right cylinder banks are often run separately, each being fitted with its own catalytic converters and mufflers. Although the aim of mufflers is to reduce noise in compliance with legislations, they can also help to create the sound specific to the type of vehicle.

2015 Audi A4 Quattro Sedan (8K2) L4-2.0L Turbo (CAED)

Vehicle » Engine, Cooling and Exhaust » Exhaust System » Description and Operation

DESCRIPTION AND OPERATION

Exhaust Systems

Overview

There are three important functions of the exhaust system: to reduce the pollutants in exhaust gas, muffle engine combustion noise and to discharge exhaust gas at a convenient location on the vehicle (often underneath the rear bumper). A passenger-car exhaust system consists of the following; exhaust manifold, exhaust treatment components, sound absorption components and the system of pipes connecting these components.

Exhaust Manifold

The manifold is an important component in the exhaust system. It routes the exhaust gas out of the cylinder outlet ports into the subsequent exhaust system. The geometry of the manifold (i.e. length and cross-section of the individual pipes) has an impact on the performance characteristics, the acoustic behavior of the exhaust system, and the exhaust temperature. In some cases, the manifold is insulated with an air gap to quickly reach high exhaust temperature and to shorten the time taken by the catalytic converter to reach its operating temperature.

Emission Control

The primary emission control component is the catalytic converter, which breaks down the gaseous pollutants in the exhaust gas (CO, HC and NOx). Catalytic converters are installed as close as possible to the engine so that they can quickly reach their operating temperature and therefore be effective in urban driving. It also bears a sound-absorbing function, especially to the higher frequency portion of the engine combustion noise.

Sound Absorption

Mufflers dampen or absorb the noise produced by engine combustion. In principle, they can be installed at any position in the exhaust system. However, they are mostly located in the middle and rear sections of the exhaust system. Depending on the number of cylinders and engine output, generally 1 to 3 mufflers are used in an exhaust system. In V-engines, the left and right cylinder banks are often run separately, each being fitted with its own catalytic converters and mufflers. Although the aim of mufflers is to reduce noise in compliance with legislations, they can also help to create the sound specific to the type of vehicle.

© 2018 ALLDATA LLC. All rights reserved. Terms and Conditions

The ’166 patent Accused Instrumentalities comprise a NO_x trap.

As shown above, there is a catalytic converter in the engine exhaust after treatment system.

Figure 47

DTC / Description	Monitor Strategy Description	Malfunction Criteria and Threshold Value	Secondary Parameters with Enable Conditions	Monitoring Time Length	MIL Illum.	Component Diagnostic Procedure
P0136 O2 Sensor Circuit	Oxygen Sensors rear response check	• gradient sensor voltage < 600.00 [mV/s]	general conditions: • forced close the gap stimulation not active • internal resistance O2S rear < 700.00 [Ohm] • close the gap stimulation request active • vehicle speed >= 6 [mph] • catalyst overheating protection not active • turbine overheating protection not active • O2S rear ready • O2S front ready • ECT @ cylinder head > 60 [°C] • modeled catalyst temperature 470...780 [°C] • difference between dynamic and stationary catalyst temperature -306...304 [°C] • modeled catalyst temperature once after engine start > 550 [°C] • integrated MAF, catalyst temp. conditions fulfilled >= 0.0 [g] • modeled EGT @ O2S rear <= 900 [°C] • MAF per cylinder 30.00...200.00 [kg/h] • MAF per cylinder per stroke, lower range >= 89.99 [mg/stk]	• 60-70 [s] • once / DCY	• 1 DCY	– Check the Oxygen Sensor After Three Way Catalytic Converter - G130- . Refer to ⇒ "3.6.27 Oxygen Sensor 1 After Catalytic Converter GX7 , Checking", page 1004

Reproduced by copying or printing for private or commercial purposes, in part or in whole, is not permitted unless authorized. AUDI AG does not guarantee or accept any liability with respect to the correctness of information in this document. Copyright by AUDI AG.

Figure 48

2015 Audi A4 Quattro Sedan (8K2) L4-2.0L Turbo (CAED)
Vehicle » Powertrain Management » Emission Control Systems » Evaporative Emissions System » Diagrams » Connection Diagram - EVAP System, with Tank Leak Diagnosis System, Vehicles with 4-Cylinder Engine

CONNECTION DIAGRAM - EVAP SYSTEM, WITH TANK LEAK DIAGNOSIS SYSTEM, VEHICLES WITH 4-CYLINDER ENGINE

Connection Diagram - EVAP System, with Tank Leak Diagnosis System, Vehicles with 4-Cylinder Engine

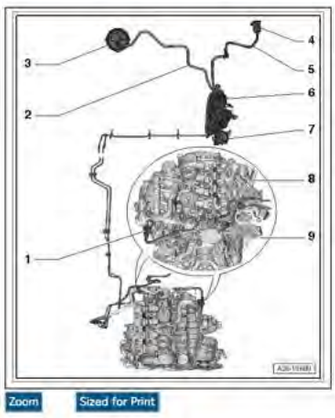

Zoom Sized for Print

1 EVAP Canister Purge Regulator Valve 1 (N80)
2 Breather Line
- From the fuel tank locking flange to the EVAP canister
- Clipped into brackets under the vehicle underbody

3 Fuel Tank **Locking Flange**
4 Air Filter
- For the Leak Detection Pump (V144)

5 Connecting Line
- From the Leak Detection Pump (V144) to the air filter
- Clipped into brackets under the vehicle underbody

6 Evaporative Emission (EVAP) Canister
- Installed location: under the luggage compartment floor
- Removing and installing. Refer to => [EVAP Canister, Removing and Installing] See: Evaporative Emission Control Canister\Service and Repair\EVAP Canister, Removing and Installing\EVAP Canister, Removing and Installing.

7 Leak Detection Pump **(V144)**
- From MY 2013 replaced with Fuel Tank Leak Detection Control Module (J909) with integrated Fuel Tank Pressure Sensor (G400)
- Installed location: on the EVAP canister under the bottom of the luggage compartment
- Check in Guided Fault Finding mode using the Vehicle Diagnostic Tester.
- Removing and installing. Refer to => [Leak Detection Pump, Removing and Installing] See: Leak Detection Pump\Service and Repair.

8 Breather Line
- From EVAP canister to EVAP Canister Purge Regulator Valve 1 (N80)
- Clipped into brackets under the vehicle underbody

9 Vacuum Line
- From the engine to the Leak Detection Pump (V144).
- Clipped into brackets under the vehicle underbody

As shown above, the NOx trap (catalyst) is in contact with an exhaust gas exhausted from a combustion chamber. The ’166 patent Accused Instrumentalities both measured and model catalyst temperature.

The ’166 patent Accused Instrumentalities comprise a method of controlling a direct injection spark ignited internal combustion engine enabling evaporated fuel vapors to enter the combustion chamber at a flow rate while the engine is operating in the stratified mode.

2015 Audi A4 Quattro Sedan (8K2) L4-2.0L Turbo (CAED)

Vehicle » A L L Diagnostic Trouble Codes (DTC) » Testing and Inspection » P Code Charts » P0444 » Engine Control Module 2015 MY

ENGINE CONTROL MODULE 2015 MY

Engine Control Module 2015 MY

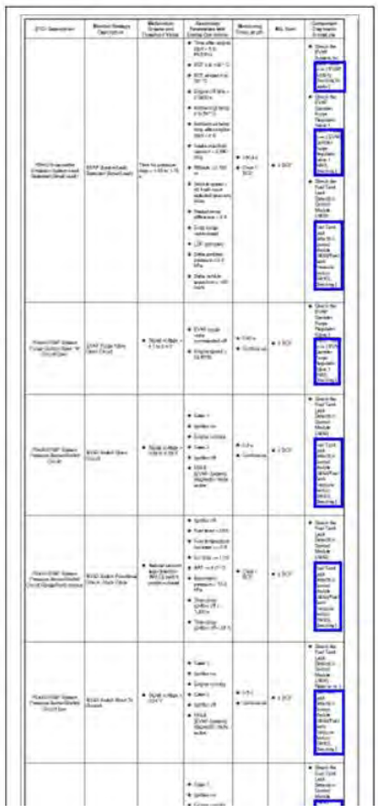

P0444 EVAP System Purge Control Valve "A" Circuit Open	EVAP Purge Valve Open Circuit	• Signal voltage > 4.7 to 5.4 V	• EVAP purge valve commanded off • Engine speed > 60 RPM	• 0.50 s • Continuous	• 2 DCY	• Check the EVAP Canister Purge Regulator Valve 1 [N80] Refer to = [EVAP Canister Purge Regulator Valve 1 [N80], Checking]

For example, as shown above, the duty cycle is between 0% and 90%.

2015 Audi A4 Quattro Sedan (8K2) L4-2.0L Turbo (CAED)
Vehicle » Powertrain Management » Emission Control Systems » Evaporative Emissions System » Diagrams » Connection Diagram - EVAP System, with Tank Leak Diagnosis System, Vehicles with 4-Cylinder Engine

CONNECTION DIAGRAM - EVAP SYSTEM, WITH TANK LEAK DIAGNOSIS SYSTEM, VEHICLES WITH 4-CYLINDER ENGINE

Connection Diagram - EVAP System, with Tank Leak Diagnosis System, Vehicles with 4-Cylinder Engine

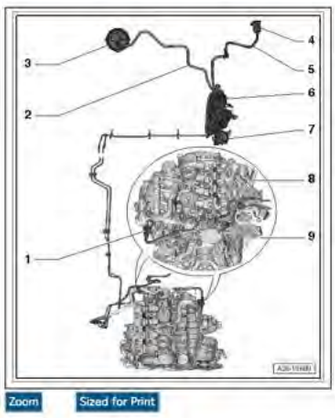

Zoom Sized for Print

1 EVAP Canister Purge Regulator Valve 1 (N80)
2 Breather Line
- From the fuel tank locking flange to the EVAP canister
- Clipped into brackets under the vehicle underbody

3 Fuel Tank **Locking Flange**
4 Air Filter
- For the Leak Detection Pump (V144)

5 Connecting Line
- From the Leak Detection Pump (V144) to the air filter
- Clipped into brackets under the vehicle underbody

6 Evaporative Emission (EVAP) Canister
- Installed location: under the luggage compartment floor
- Removing and installing. Refer to => [EVAP Canister, Removing and Installing] See: Evaporative Emission Control Canister\Service and Repair\EVAP Canister, Removing and Installing\EVAP Canister, Removing and Installing.

7 Leak Detection Pump **(V144)**
- From MY 2013 replaced with Fuel Tank Leak Detection Control Module (J909) with integrated Fuel Tank Pressure Sensor (G400)
- Installed location: on the EVAP canister under the bottom of the luggage compartment
- Check in Guided Fault Finding mode using the Vehicle Diagnostic Tester.
- Removing and installing. Refer to => [Leak Detection Pump, Removing and Installing] See: Leak Detection Pump\Service and Repair.

8 Breather Line
- From EVAP canister to EVAP Canister Purge Regulator Valve 1 (N80)
- Clipped into brackets under the vehicle underbody

9 Vacuum Line
- From the engine to the Leak Detection Pump (V144).
- Clipped into brackets under the vehicle underbody

The ’166 patent Accused Instrumentalities comprise a charcoal canister (Evaporative Emissions EVAP Canister) which contains evaporative fuel content.

Figure 49

S3, TT 2015 ►
Audi Generic Scan Tool - Edition 12.2017

DTC / Description	Monitor Strategy Description	Malfunction Criteria and Threshold Value	Secondary Parameters with Enable Conditions	Monitoring Time Length	MIL Illum.	Component Diagnostic Procedure
P0136 O2 Sensor Circuit	Oxygen Sensors rear response check	• gradient sensor voltage < 600.00 [mV/s]	general conditions: • forced close the gap stimulation not active • internal resistance O2S rear < 700.00 [Ohm] • close the gap stimulation request active • vehicle speed >= 6 [mph] • catalyst overheating protection not active • turbine overheating protection not active • O2S rear ready • O2S front ready • ECT @ cylinder head > 60 [°C] • modeled catalyst temperature 470...780 [°C] • difference between dynamic and stationary catalyst temperature -306...304 [°C] • modeled catalyst temperature once after engine start > 550 [°C] • integrated MAF, catalyst temp. conditions fulfilled >= 0.0 [g] • modeled EGT @ O2S rear <= 900 [°C] • MAF per cylinder 30.00...200.00 [kg/h] • MAF per cylinder per stroke, lower range >= 89.99 [mg/stk]	• 60-70 [s] • once / DCY	• 1 DCY	– Check the Oxygen Sensor After Three Way Catalytic Converter - G130- . Refer to ⇒ "3.6.27 Oxygen Sensor 1 After Catalytic Converter GX7 , Checking" , page 1004

76 Rep. Gr. ST - Generic Scan Tool

As shown above, the ’166 patent Accused Instrumentalities comprise a method of modeling catalyst temperature.

Figure 50

2015 Audi A4 Quattro Sedan (8K2) L4-2.0L Turbo (CAED)
Vehicle » Powertrain Management » Emission Control Systems » Evaporative Emissions System » Diagrams » Connection Diagram - EVAP System, with Tank Leak Diagnosis System, Vehicles with 4-Cylinder Engine

CONNECTION DIAGRAM - EVAP SYSTEM, WITH TANK LEAK DIAGNOSIS SYSTEM, VEHICLES WITH 4-CYLINDER ENGINE

Connection Diagram - EVAP System, with Tank Leak Diagnosis System, Vehicles with 4-Cylinder Engine

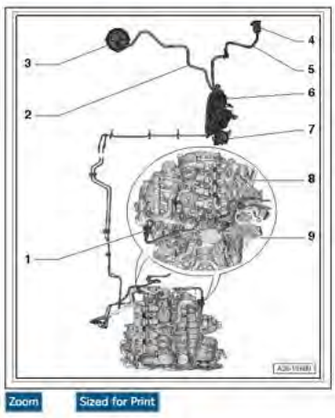

Zoom Sized for Print

1 EVAP Canister Purge Regulator Valve 1 (N80)
2 Breather Line
- From the fuel tank locking flange to the EVAP canister
- Clipped into brackets under the vehicle underbody

3 Fuel Tank **Locking Flange**
4 Air Filter
- For the Leak Detection Pump (V144)

5 Connecting Line
- From the Leak Detection Pump (V144) to the air filter
- Clipped into brackets under the vehicle underbody

6 Evaporative Emission (EVAP) Canister
- Installed location: under the luggage compartment floor
- Removing and installing. Refer to => [EVAP Canister, Removing and Installing] See: Evaporative Emission Control Canister\Service and Repair\EVAP Canister, Removing and Installing\EVAP Canister, Removing and Installing.

7 Leak Detection Pump **(V144)**
- From MY 2013 replaced with Fuel Tank Leak Detection Control Module (J909) with integrated Fuel Tank Pressure Sensor (G400)
- Installed location: on the EVAP canister under the bottom of the luggage compartment
- Check in Guided Fault Finding mode using the Vehicle Diagnostic Tester.
- Removing and installing. Refer to => [Leak Detection Pump, Removing and Installing] See: Leak Detection Pump\Service and Repair.

8 Breather Line
- From EVAP canister to EVAP Canister Purge Regulator Valve 1 (N80)
- Clipped into brackets under the vehicle underbody

9 Vacuum Line
- From the engine to the Leak Detection Pump (V144).
- Clipped into brackets under the vehicle underbody

Upon information and belief, the ECM is capable of "adjusting the flow rate of the evaporated fuel vapors as a function of the second temperature when the second temperature is within a lower temperature threshold and an upper temperature threshold."

Figure 51

Based upon the totality of the foregoing evidence, and based further upon information and belief, the '166 patent Accused Instrumentalities practice a "method of controlling a direct injection spark ignited internal combustion engine that is capable of operating in a stratified mode where fuel is injected during a compression stroke of the engine and a homogeneous mode where fuels is injected during an intake stroke of the engine, the internal combustion engine having a catalytic converter and an NOx trap, comprising: measuring a first temperature of an NOx trap that is in contact with an exhaust gas exhausted from a combustion chamber while the engine is operating in the stratified mode; enabling evaporated fuel vapors to enter the combustion

chamber at a flow rate while the engine is operating in the stratified mode; measuring a second temperature of the NOx trap while the engine is operating in the stratified mode; and adjusting the flow rate of the evaporated fuel vapors as a function of the second temperature when the second temperature is within a lower temperature threshold and an upper temperature threshold."

COUNT VIII – INFRINGEMENT OF U.S. PATENT NO. 6,988,031

54. The allegations set forth in the foregoing paragraphs 1 through 53 are incorporated into this Eighth Claim for Relief.

55. On January 17, 2006 U.S. Patent No. 6,988,031 ("the '031 patent"), entitled "System and Method for Determining Engine Stop Position," was duly and legally issued by the United States Patent and Trademark Office. A true and correct copy of the '031 patent is attached as Exhibit 8.

56. Plaintiff is the assignee and owner of the right, title and interest in and to the '031 patent, including the right to assert all causes of action arising under said patents and the right to any remedies for infringement of them.

57. Upon information and belief, Defendants have directly infringed at least claim 1 of the '031 patent by making, using, selling, importing and/or providing and causing to be used the 2015-2018 Jetta (1.4L) or other vehicles having incorporated the DTI engine (the "'031 patent Accused Instrumentalities").

58. Upon information and belief, the '031 patent Accused Instrumentalities incorporate the Theta II Engine which comprises a system for determining a stop position of an engine.

59. In particular, claim 1 of the '031 patent recites a system for determining a stop position of an engine, the system comprising: a sensor configured to generate a signal corresponding to the angle of the engine; a controller coupled to the sensor and configured to receive the signal; and an air flow control device coupled to the engine to control air intake, the

controller being configured to control the air flow control device to lower air pressure in the engine based on an engine shutdown signal.

60. On information and belief, the ’031 patent Accused Instrumentalities infringe claim 1 of the ’031 patent. The ’031 patent Accused Instrumentalities comprise a system for determining a stop position of an engine (*Figure 52*), the system comprising: a sensor configured to generate a signal corresponding to the angle of the engine (*Figure 53*); a controller coupled to the sensor and configured to receive the signal (*Figure 54*); and an air flow control device coupled to the engine to control air intake (*Figure 55*), and upon information and belief the controller being configured to control the air flow control device to lower air pressure in the engine based on an engine shutdown signal (*Figures 52-53*).

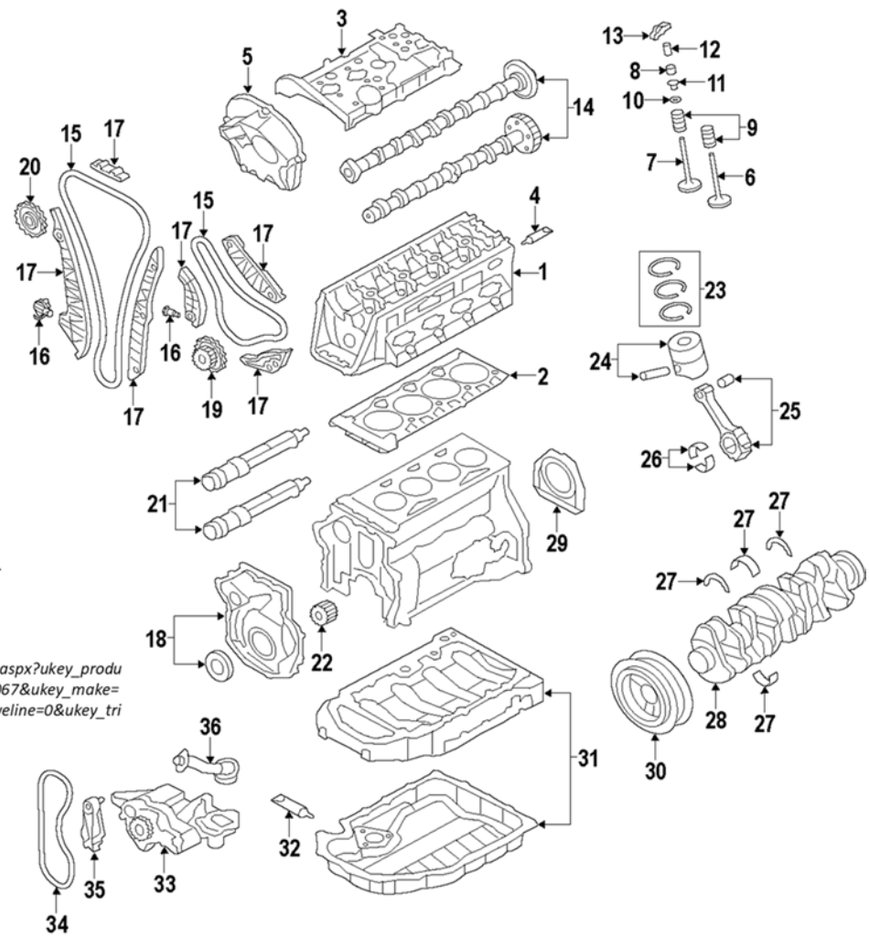

14. CAMSHAFT. EXHAUST CAMSHAFT.
14. CAMSHAFT. INTAKE CAMSHAFT.
19. CRANKSHAFT GEAR. SPROCKET.
28. CRANKSHAFT.

https://parts.vw.com/showAssembly.aspx?ukey_product=54564514&ukey_assembly=6379067&ukey_make=5808&ukey_model=89978&ukey_driveline=0&ukey_trimlevel=0&modelYear=2016

The camshaft (14 above) and crankshaft (28 above) control the piston position in an internal combustion engine.

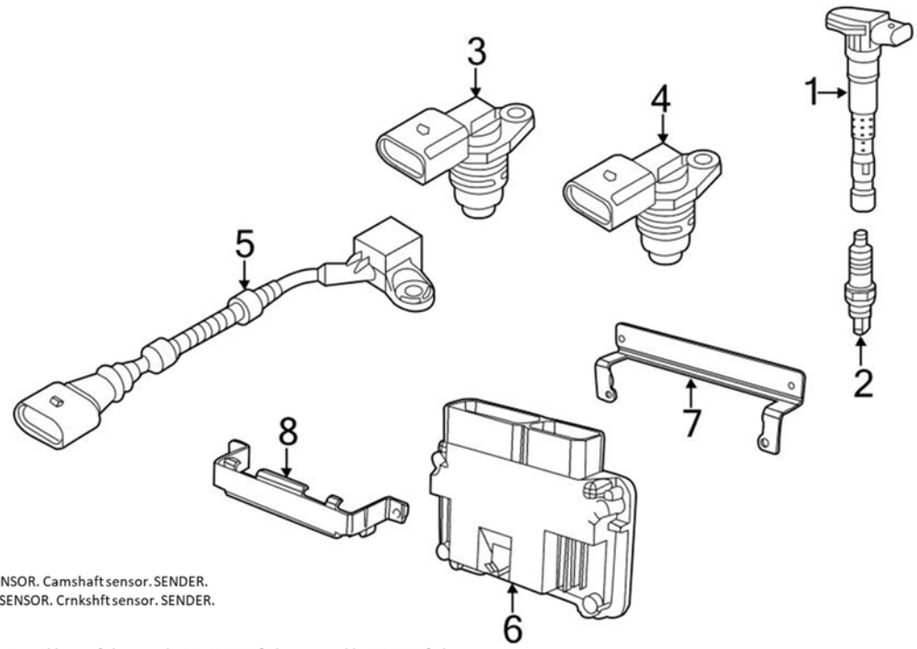

3. CAMSHAFT POSITION SENSOR. Camshaft sensor. SENDER.
4. CRANKSHAFT POSITION SENSOR. Crnkshft sensor. SENDER.
5. Knock sensor. SENSOR.

https://parts.vw.com/showAssembly.aspx?ukey_product=47994496&ukey_assembly=5990910&ukey_make=5808&ukey_model=89978&ukey_driveline=0&ukey_trimlevel=0&modelYear=2016

The camshaft position sensor (3 above) sends a signal to the ECM corresponding with the stop position of an engine.

Figure 52

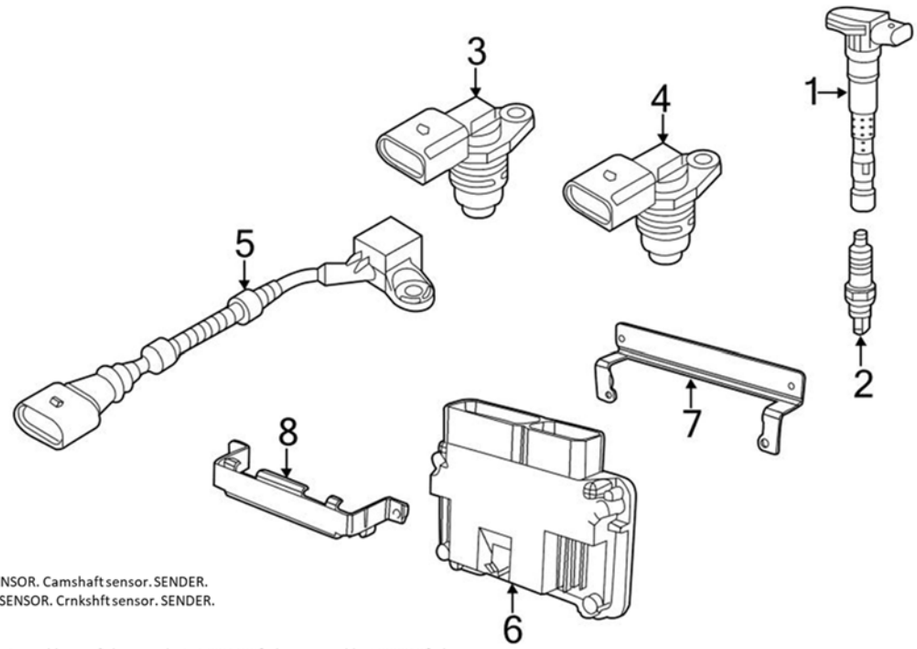

3. CAMSHAFT POSITION SENSOR. Camshaft sensor. SENDER.
4. CRANKSHAFT POSITION SENSOR. Crnkshft sensor. SENDER.
5. Knock sensor. SENSOR.

https://parts.vw.com/showAssembly.aspx?ukey_product=47994496&ukey_assembly=5990910&ukey_make=5808&ukey_model=89978&ukey_driveline=0&ukey_trimlevel=0&modelYear=2016

The ’031 patent Accused Instrumentalities comprise a Camshaft Position Sensor (3 above) which generates a signal corresponding to the angle of the engine.

Figure 53

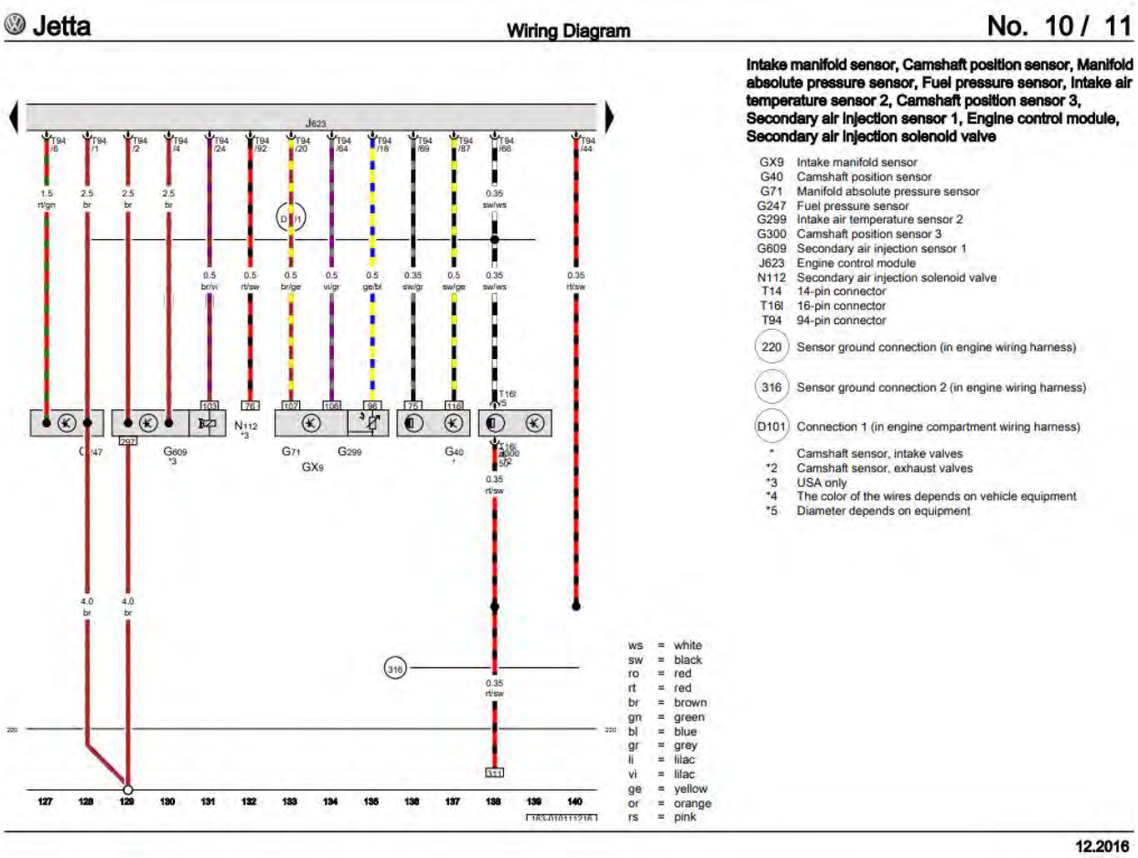

For example, the Engine Control Module (ECM; J623), a controller, is coupled to the Camshaft Position Sensors (G40; G300) and to receive the signals generated by these sensors.

Figure 54

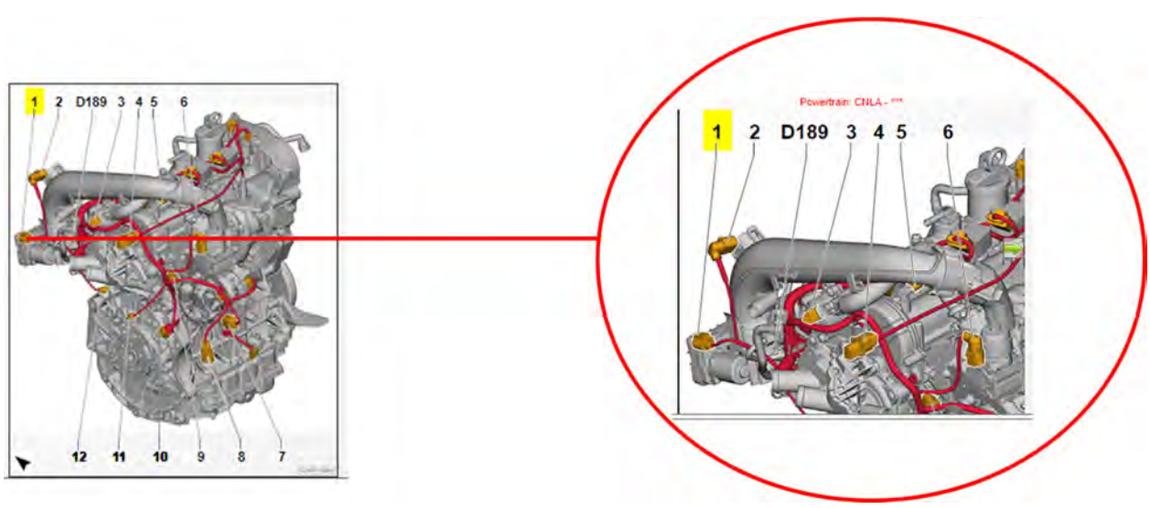

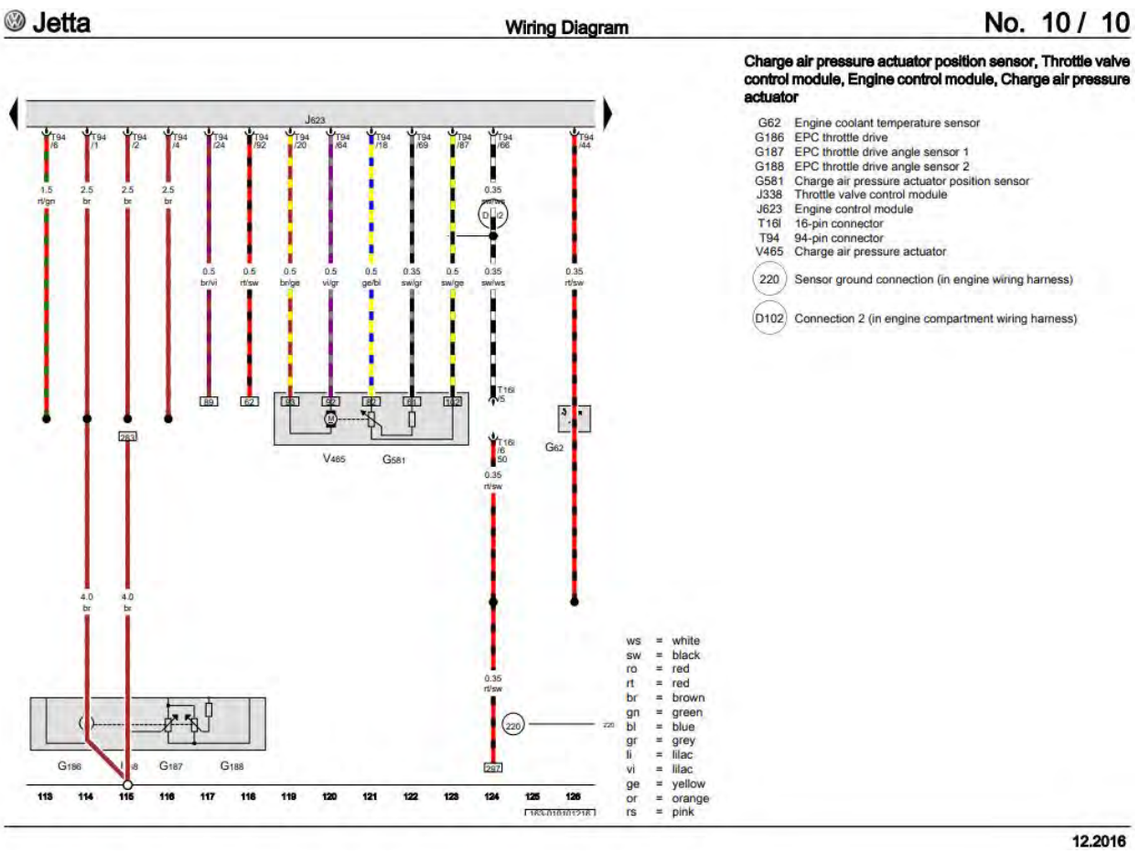

For example, in the images above the throttle valve control module (J338), EPC throttle drive (G186), and EPC throttle drive angle sensor 1 (G187) and 2 (G188) with the ECM (J623) control the air flow and are coupled to the engine to control air intake. The throttle angle sensor has functions for detecting a fully-closed throttle and estimating intake air volume by the amount of throttle opening. Shimatani, K., *Detecting a Fully-Closed Throttle by Manifold Pressure in Fuel Injection System with Idle Speed Control*, SAE Technical Paper 2014-32-0075, 2014, https://doi.org/10.4271/2014-32-0075.

Figure 55

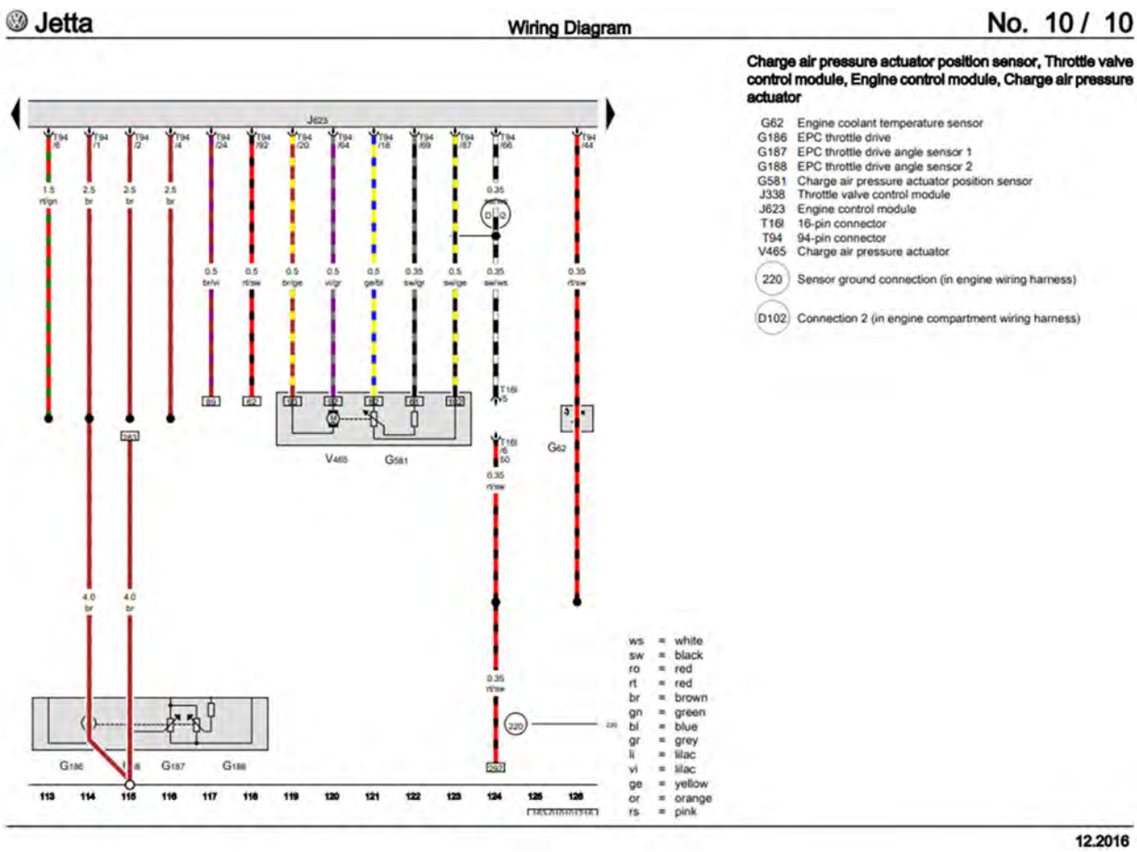

For example, the ECM (J623) is configured to control the air flow control device (throttle valve not shown here) to lower air pressure in the engine based on an engine shutdown signal.

The engine shutdown signal is communicated at the end of a drive cycle. When the engine is shut down, the throttle angle is at 0 degrees, thereby decreasing the air pressure in the engine.

Figure 56

Based upon the totality of the foregoing evidence, and based further upon information and belief, the ’031 patent Accused Instrumentalities include “a system for determining a stop position of an engine, the system comprising: a sensor configured to generate a signal corresponding to the angle of the engine; a controller coupled to the sensor and configured to receive the signal; and an air flow control device coupled to the engine to control air intake, the controller being configured to control the air flow control device to lower air pressure in the engine based on an engine shutdown signal.”

COUNT IX – INFRINGEMENT OF U.S. PATENT NO. 6,612,287

61. The allegations set forth in the foregoing paragraphs 1 through 60 are incorporated into this Ninth Claim for Relief.

62. On September 2, 2003 U.S. Patent No. 6,612,287 ("the '287 patent"), entitled "Electronic Throttle Position Feedforward System," was duly and legally issued by the United States Patent and Trademark Office. A true and correct copy of the '287 patent is attached as Exhibit 9.

63. Plaintiff is the assignee and owner of the right, title and interest in and to the '287 patent, including the right to assert all causes of action arising under said patents and the right to any remedies for infringement of them.

64. Upon information and belief, Defendants have directly infringed at least claim 1 of the '287 patent by making, using, selling, importing and/or providing and causing to be used the 2012-2018 Tiguan, 2012-2018 Audi A3, 2012-2018 Audi A4, 2012-2018 Audi A5, 2012-2018 Audi A6, 2016-2018 Audi TT, 2015-2018 Audi S3, 2015-2018 VW Golf, 2012-2018 VW Golf GTI, 2015-2018 VW Golf R, 2015-2018 Golf Sportwagon, 2013-2018 Jetta GLI, 2014-2018 VW Jetta Sedan, 2014-2018 VW Passat, 2012-2017 WV CC, 2012-2018 VW Beetle, 2018 VW Atlas, 2015- 2018 Audi Q3, 2012-2018 Audi Q5, and 2017-2018 Porsche Macan with the EA888 engines (the "'281 patent Accused Instrumentalities").

65. In particular, claim 1 of the '287 patent recites a method for controlling a positioning device of an internal combustion engine, the method comprising the steps of: providing an electronic motor for actuating said positioning device with a torque being applied to said motor over the positioning range and said torque changing sign thereby defining a torque reversal point; detecting a commanded position of said positioning device; determining whether said positioning device's command is in the region of said torque reversal point; forming a drive signal for the motor on the basis of said commanded position for said positioning device; and changing said drive signal to abruptly change the motor voltage when said commanded position is in said region of said torque reversal point.

66. On information and belief, the ’281 patent Accused Instrumentalities infringe claim 1 of the ’287 patent. The ’281 patent Accused Instrumentalities practice a method controlling a positioning (*Figure 57*) device of an internal combustion engine (*Figure 57*), the method comprising the steps of: providing an electronic motor (*Figure 57*) for actuating said positioning device with a torque being applied to said motor over the positioning range and said torque changing sign thereby defining a torque reversal point (*Figure 57*); detecting a commanded position of said positioning device (*Figure 57*); determining whether said positioning device's command is in the region of said torque reversal point (*Figure 57*); forming a drive signal for the motor on the basis of said commanded position for said positioning device (*Figure 57*); and changing said drive signal to abruptly change the motor voltage when said commanded position is in said region of said torque reversal point (*Figure 57*).

2.3 Electronic Throttle Control (ETC) System

The electronic throttle control (ETC) system consists of the accelerator-pedal module, the engine control module (ECM), and the electronic throttle body. The electronic throttle body mainly consists of the throttle valve, the electric throttle-valve drive element, and the throttle-valve position sensor (TPS). The drive element is a DC servomotor, which acts on the throttle-valve shaft via a gear unit. The throttle-valve position sensor is a redundant sensor system that detects the position of the throttle valve. The sensors have opposite resistance curves so that the ECM can always cross check the signals to ensure the correct position of the throttle valve is always known.

The driver command is detected by a redundant sensor system in the accelerator-pedal module, and the signal is sent to the engine control module. The engine control module then determines the required throttle-valve position by performing calculations from data measured by sensors such as accelerator pedal position sensor, engine speed sensor and vehicle speed sensor. The actual throttle opening can be more or less in proportion to accelerator pedal position given different engine operating points.

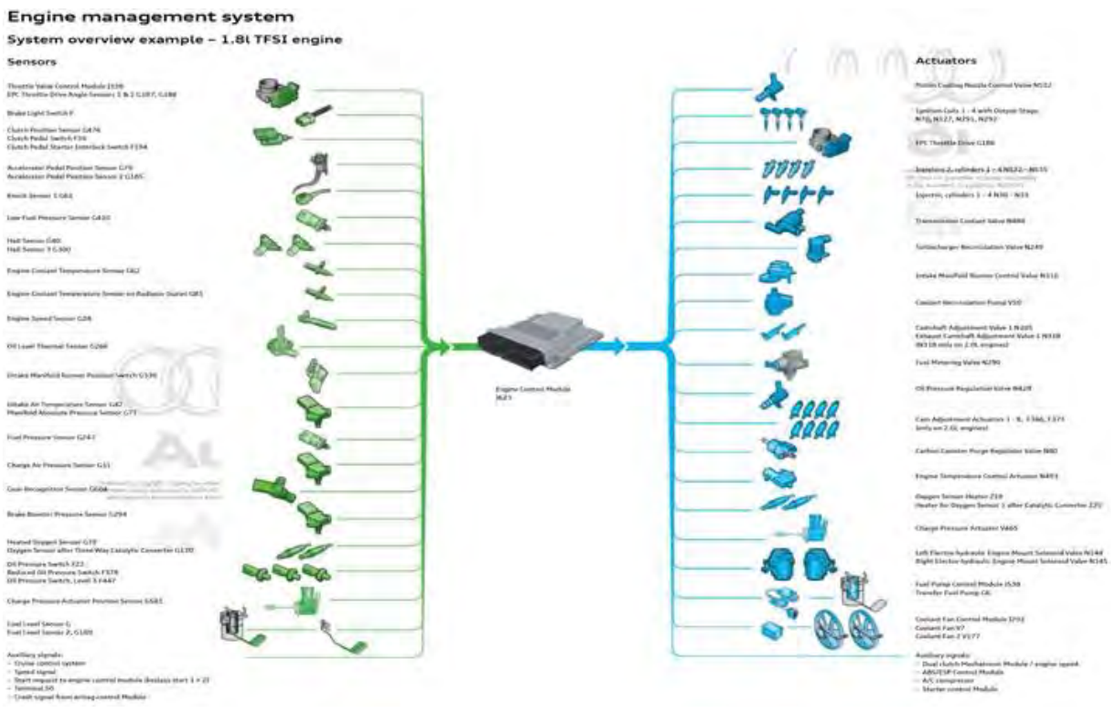

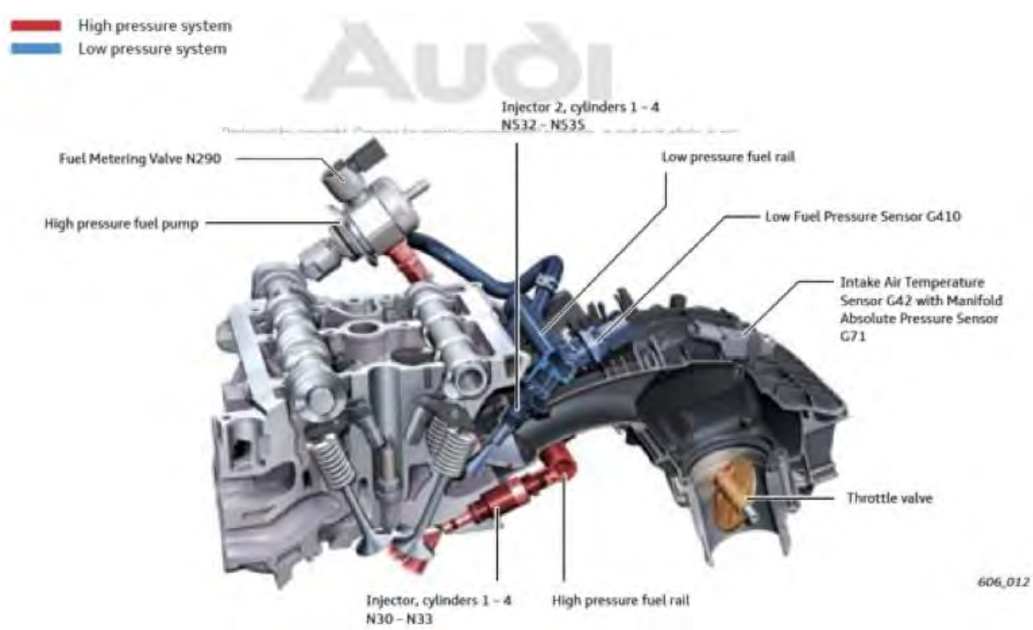

The positioning device (throttle valve) is within the Throttle Valve Control Module J338 shown above.

The Engine Control Module (ECM) controls the positioning device (throttle valve) of an internal combustion position. The positioning device (throttle valve) is within the Throttle Valve Control Module J338 shown above.

Figure 57

COUNT X – INFRINGEMENT OF U.S. PATENT NO. 7,487,761

67. The allegations set forth in the foregoing paragraphs 1 through 66 are incorporated into this Tenth Claim for Relief.

68. On February 10, 2009 U.S. Patent No. 7,487,761 ("the '761 patent"), entitled "Detection of Fuel System Problems," was duly and legally issued by the United States Patent and Trademark Office. A true and correct copy of the '761 patent is attached as Exhibit 10.

69. Plaintiff is the assignee and owner of the right, title and interest in and to the '761 patent, including the right to assert all causes of action arising under said patents and the right to any remedies for infringement of them.

70. Upon information and belief, Defendants have directly infringed at least claims 1 and 17 of the '761 patent by making, using, selling, importing and/or providing and causing to be used the 2012-2018 Tiguan, 2012-2018 Audi A3, 2012-2018 Audi A4, 2012-2018 Audi A5, 2012-2018 Audi A6, 2016-2018 Audi TT, 2015-2018 Audi S3, 2015-2018 VW Golf, 2012-2018 VW Golf GTI, 2015-2018 VW Golf R, 2015-2018 Golf Sportwagon, 2013-2018 Jetta GLI, 2014-2018 VW Jetta Sedan, 2014-2018 VW Passat, 2012-2017 WV CC, 2012-2018 VW Beetle, 2018 VW Atlas, 2015- 2018 Audi Q3, 2012-2018 Audi Q5, and 2017-2018 Porsche Macan with the EA888 engines (the "'761 patent Accused Instrumentalities").

71. In particular, claim 1 of the '761 patent recites a method for detecting failures in a fuel system for a motor vehicle, the fuel system includes a fuel pump providing fuel from a fuel tank to a fuel injector rail of an engine, a fuel pump controller is electrically connected to the fuel pump and a rail pressure sensor, the rail pressure sensor is attached to the fuel injector rail in fluid communication with fuel being provided from the fuel tank, the method comprises: monitoring an actual fuel pump parameter of the fuel pump and a fuel injector rail pressure; comparing the actual fuel pump parameter required to achieve a desired fuel injector rail pressure

to an initial fuel pump parameter to achieve the desired fuel injector rail pressure; and signaling a fuel system problem if a difference between the actual fuel pump parameter and the initial fuel pump parameter exceeds a predetermined threshold.

72. On information and belief, the ’761 patent Accused Instrumentalities infringe claim 1 of the ’761 patent. The ’761 patent Accused Instrumentalities practice a method for detecting failures in a fuel system for a motor vehicle (*Figure 58*), the fuel system includes a fuel pump providing fuel from a fuel tank to a fuel injector rail of an engine (*Figure 59*), a fuel pump controller is electrically connected to the fuel pump and a rail pressure sensor (*Figure 60*), the rail pressure sensor is attached to the fuel injector rail in fluid communication with fuel being provided from the fuel tank (*Figure 61*), the method comprises: monitoring an actual fuel pump parameter of the fuel pump and a fuel injector rail pressure (*Figure 62*); comparing the actual fuel pump parameter required to achieve a desired fuel injector rail pressure to an initial fuel pump parameter to achieve the desired fuel injector rail pressure (*Figure 63*); and signaling a fuel system problem if a difference between the actual fuel pump parameter and the initial fuel pump parameter exceeds a predetermined threshold (*Figure 64*).

DTC / Description	Monitor Strategy Description	Malfunction Criteria and Threshold Value	Secondary Parameters with Enable Conditions	Monitoring Time Length	MIL Illum.	Component Diagnostic Procedure
P0087 Fuel Rail/ System Pressure - Too Low Bank 1	Fuel System Pressure Sensor, High Pressure Side Out Of Range Low	• Deviation between reference fuel pressure setpoint and current fuel pressure > 2,999.80 kPa • Case: 1 • Deviation lambda of controller included adaption -50.00 – 50.00 % • High pressure controller output > 45 mg • Fuel pressure < 3,500.31 kPa • Case 2: • Fuel pump at max limit • Mass fuel flow setpoint < 1,389.00 mg/rev • Fuel pressure < 34,777.60 kPa	General: • Engine speed 608 – 6,816 rpm • Fuel mass setpoint 5.00 – 1,389.00 mg/rev • Time after engine start > 10.0 s • Engine warm-up not calibrated • Catalyst heating not calibrated • Full load not calibrated • Catalyst purge not calibrated • Lambda control not calibrated • Evap purge functionality diagnosis not calibrated • Fuel pressure setpoint <= 34,777.60 kPa • And • Depending on low dynamic conditions: • Fuel mass setpoint lower range > 5.00 mg/rev • For time >= 10.0 s • Fuel mass setpoint upper range < 187.17 – 229.23 mg/rev • Fuel mass setpoint gradient -1389.00...1389.00 mg/rev • For time >= 5.0 s • And • Depending on canister purge: • Canister load not calibrated [-] • Or • Evap purge valve not calibrated	• 5.0 s • Continuous	• 2 DCY	– Check the fuel pressure and delivery quantity. Refer to fuel system mechanical testing in ⇒ "3.1 Preliminary Check", page 13 and/or to appropriate repair manual. – Check the Fuel Pressure Sensor - G247- . Refer to ⇒ "3.6.17 Fuel Pressure Sensor G247, Checking", page 983 . – Check the Fuel Pressure Regulator Valve - N276- . Refer to ⇒ "3.6.16 Fuel Metering Valve N290, Checking", page 981 . – Check the Fuel Delivery Unit - GX1- / Fuel Pump Control Module - J538- . Refer to ⇒ "3.6.18 Fuel Pump Control Module J538 / Fuel Delivery Unit GX1, Checking", page 985 .

For example, as shown in the DTC chart above, the fuel system is monitored using a self-test diagnostic strategy within the ECM and when low fuel pressure is detected in two sequential driving cycles, the ECM illuminates the Malfunction Indicator Lamp (MIL).

Figure 58

Fuel system

System overview

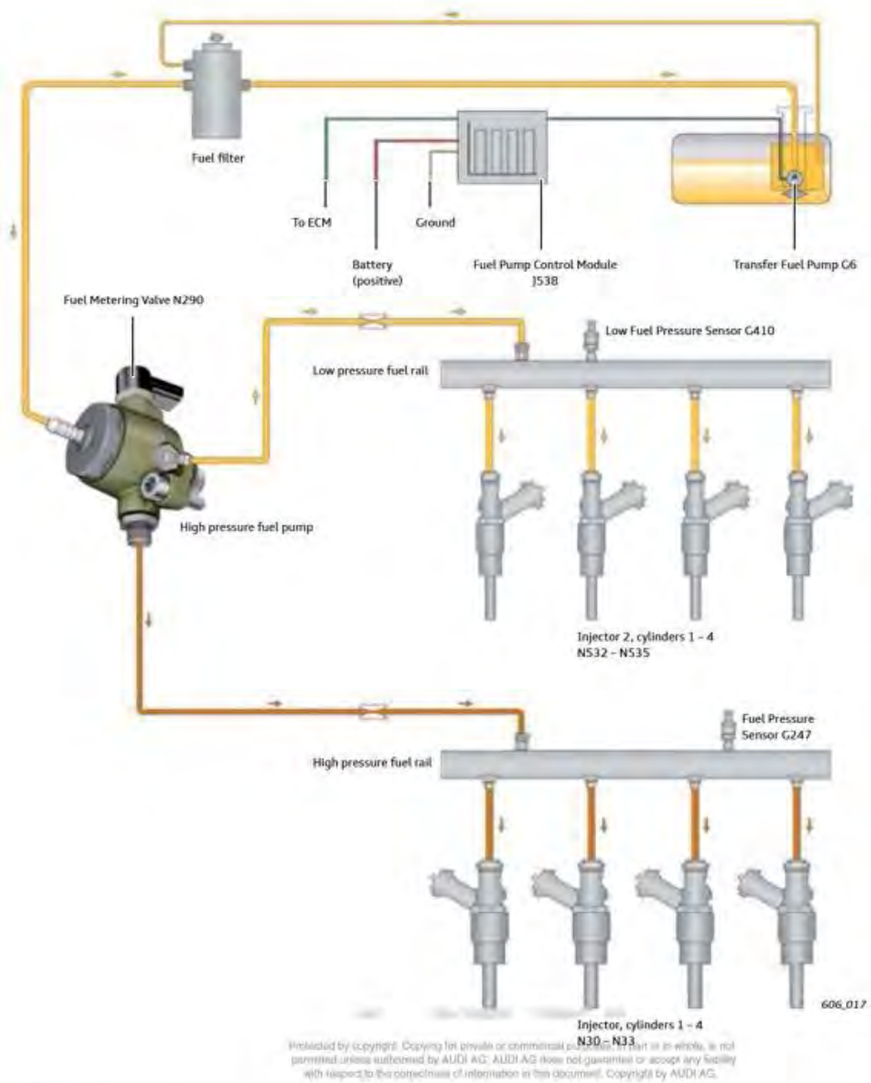

Note
Only the FSI (high pressure) system will be used on the 2015 A3 engines. The use of MPI and FSI may introduced on later Audi models.

For example, as shown in the figures above, the fuel system includes a Fuel Pump, providing fuel from a fuel tank to the fuel injector rail of an engine.

Figure 59

Fuel system

System overview

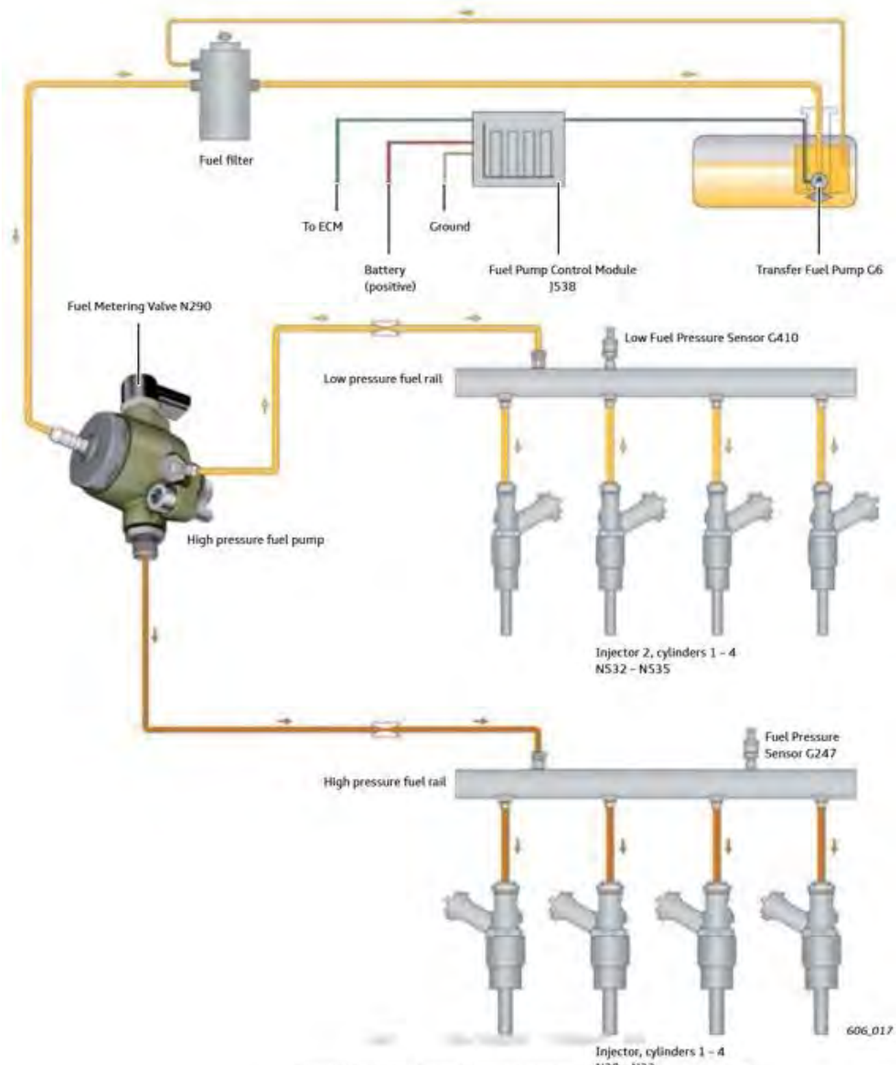

Note
Only the FSI (high pressure) system will be used on the 2015 A3 engines. The use of MPI and FSI may introduced on later Audi models.

For example, as depicted above the fuel pump controller (Powertrain Control Module (PCM)) is electrically connected to the fuel pump.

2015 Audi TT Quattro Coupe (8J3) L4-2.0L Turbo (CETA)
Vehicle » Powertrain Management » Diagrams » Electrical Diagrams » Diagram 61/15 (Tracks 183-196)

DIAGRAM 61/15 (TRACKS 183-196)

IMPORTANT NOTE:
This manufacturer uses "Track" style wiring diagrams.
For information on how to use these diagrams effectively, please refer to Diagram Information and Instructions. See: Diagrams\Diagram Information and Instructions

Camshaft position sensor, Knock sensor **1**, Fuel pressure sensor, **Intake manifold runner position sensor**, Engine control module

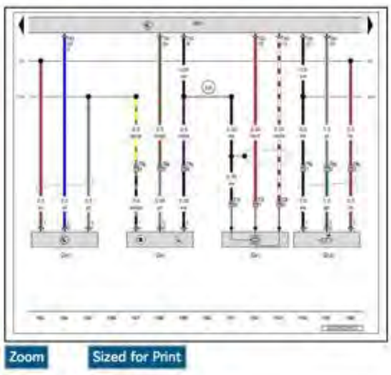

Zoom Sized for Print

ws = white
sw = black
ro = red
br = brown
gn = green
bl = blue
gr = grey
li = lilac
ge = yellow
or = orange
rs = pink

G40 - Camshaft position sensor See: Computers and Control Systems\Locations\Engine Management System
G61 - Knock sensor 1 See: Computers and Control Systems\Locations\Engine Management System
G247 - Fuel pressure sensor See: Computers and Control Systems\Locations\Engine Management System
G336 - Intake manifold runner position sensor See: Computers and Control Systems\Locations\Engine Management System
J623 - Engine control module See: Locations\Components
T3f - 3-pin connector, green
T6p - 6-pin connector, on the engine, front
T60 - 60-pin connector See: Computers and Control Systems\Engine Control Module\Locations
(220) - Sensor ground connection (in engine wiring harness)
(316) - Sensor ground connection 2 (in engine wiring harness)
(D141) - Connection 5V (in engine pre-wiring harness)
(D174) - Connection 5V (in engine pre-wiring harness) 2

Previous See: Diagram 61/14 (Tracks 169-182)

Next See: Diagram 61/16 (Tracks 197-210)

© 2018 ALLDATA LLC. All rights reserved. Terms and Conditions

For example, as depicted above, the PCM is electrically connected to the fuel (rail) pressure sensor.

Figure 60

Fuel system

System overview

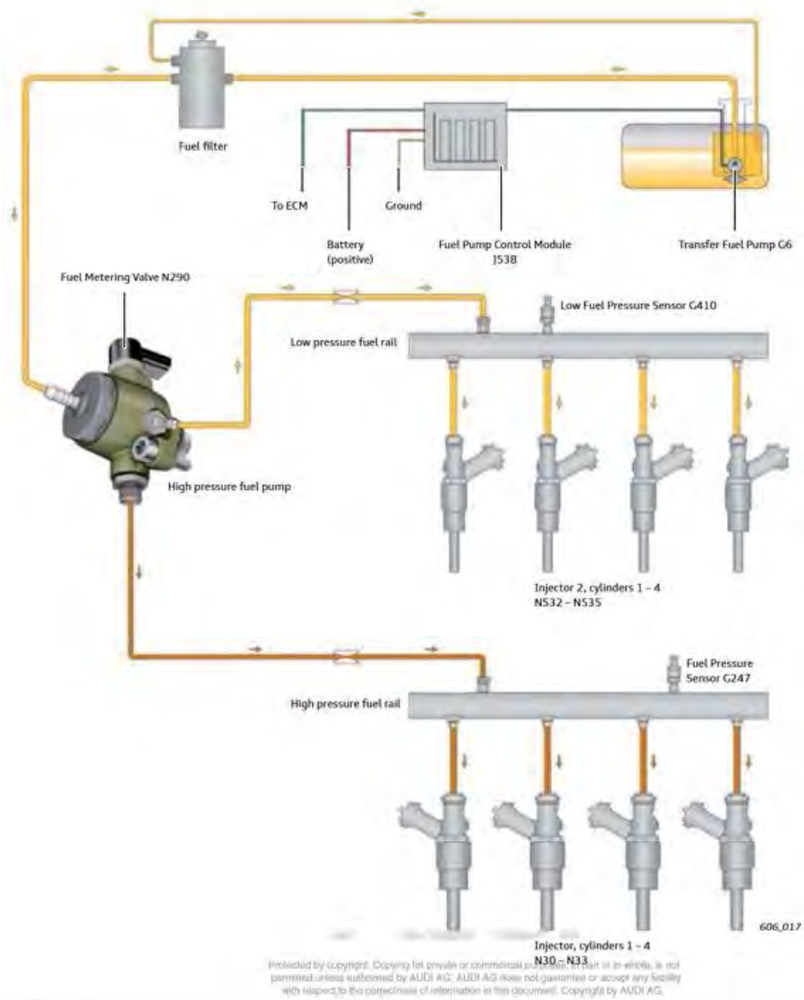

Note
Only the FSI (high pressure) system will be used on the 2015 A3 engines. The use of MPI and FSI may introduced on later Audi models.

For example, as depicted in the images above, the fuel (rail) pressure sensor is attached to the fuel (injector) rail in fluid communication with fuel being provided from the fuel tank.

Figure 61

Fuel system

System overview

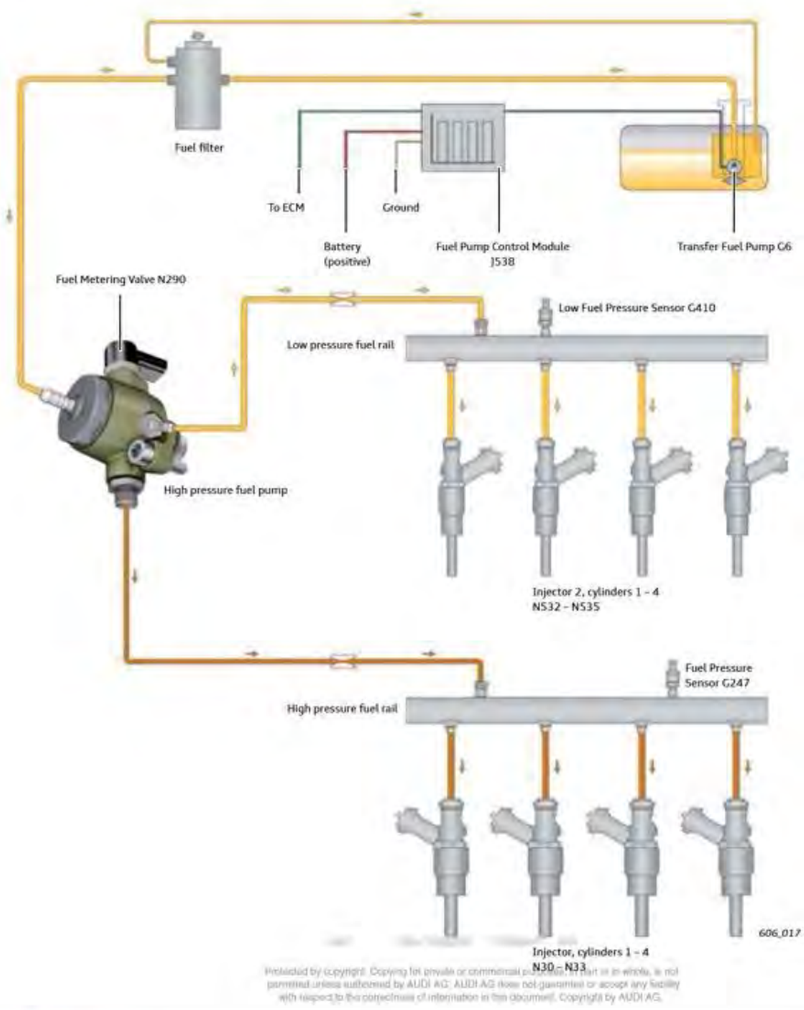

Provided by copyright. Copying for private or commercial purposes, in part or in whole, is not permitted unless authorised by AUDI AG. AUDI AG does not guarantee or accept any liability with respect to the correctness of information in this document. Copyright by AUDI AG.

Note
Only the FSI (high pressure) system will be used on the 2015 A3 engines. The use of MPI and FSI may introduced on later Audi models.

2015 Audi TT Quattro Coupe (8J3) L4-2.0L Turbo (CETA)
Vehicle » Powertrain Management » Diagrams » Electrical Diagrams » Diagram 61/13 (Tracks 155-168)

DIAGRAM 61/13 (TRACKS 155-168)

IMPORTANT NOTE:
This manufacturer uses "Track" style wiring diagrams.
For information on how to use these diagrams effectively, please refer to Diagram Information and Instructions. See: Diagrams\Diagram Information and Instructions

Engine control module, **Fuel pressure regulator valve,** Leak detection pump

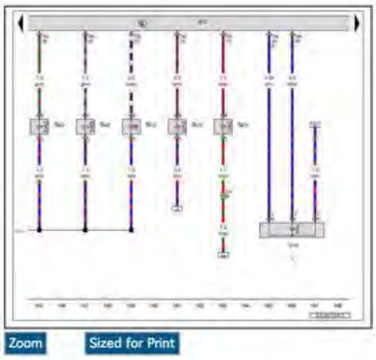

Zoom Sized for Print

ws = white
sw = black
ro = red
br = brown
gn = green
bl = blue
gr = grey
li = lilac
ge = yellow
or = orange
rs = pink

J623 - Engine control module See: Locations\Components
N112 - Secondary air injection solenoid valve See: Computers and Control Systems\Locations\3.2L Gasoline BUB, CBRA Overviews
N249 - Turbocharger recirculation valve See: Computers and Control Systems\Locations\Engine Management System
N276 - Fuel pressure regulator valve See: Computers and Control Systems\Locations\Engine Management System
N316 - Intake manifold runner control valve See: Computers and Control Systems\Locations\Engine Management System
N428 - Oil pressure regulation valve See: Computers and Control Systems\Locations\Engine Management System
T14 - 14-pin connector, in the engine compartment, left front
T60 - 60-pin connector See: Computers and Control Systems\Engine Control Module\Locations
T94 - 94-pin connector See: Computers and Control Systems\Engine Control Module\Locations
V144 - Leak detection pump See: Emission Control Systems\Evaporative Emissions System\Locations
(D102) - Connection 2 (in engine compartment wiring harness)
***** - Omitted as a running change
***2** - Only for vehicles with a fuel system diagnostic pump

Previous See: Diagram 61/12 (Tracks 141-154)

Next See: Diagram 61/14 (Tracks 169-182)

© 2018 ALLDATA LLC. All rights reserved. Terms and Conditions

DTC / Description	Monitor Strategy Description	Malfunction Criteria and Threshold Value	Secondary Parameters with Enable Conditions	Monitoring Time Length	MIL Illum.	Component Diagnostic Procedure
P0087 Fuel Rail/ System Pressure - Too Low Bank 1	Fuel System Pressure Sensor, High Pressure Side Out Of Range Low	• Deviation between reference fuel pressure setpoint and current fuel pressure > 2,999.80 kPa • Case: 1 • Deviation lambda of controller included adaption -50.00 – 50.00 % • High pressure controller output > 45 mg • Fuel pressure < 3,500.31 kPa • Case 2: • Fuel pump at max limit • Mass fuel flow setpoint < 1,389.00 mg/rev • Fuel pressure < 34,777.60 kPa	General: • Engine speed 608 – 6,816 rpm • Fuel mass setpoint 5.00 – 1,389.00 mg/rev • Time after engine start > 10.0 s • Engine warm-up not calibrated • Catalyst heating not calibrated • Full load not calibrated • Catalyst purge not calibrated • Lambda control not calibrated • Evap purge functionality diagnosis not calibrated • Fuel pressure setpoint <= 34,777.60 kPa • And • Depending on low dynamic conditions: • Fuel mass setpoint lower range > 5.00 mg/rev • For time >= 10.0 s • Fuel mass setpoint upper range < 187.17 – 229.23 mg/rev • Fuel mass setpoint gradient -1389.00...1389.00 mg/rev • For time >= 5.0 s • And • Depending on canister purge: • Canister load not calibrated [-] • Or • Evap purge valve not calibrated	• 5.0 s • Continuous	• 2 DCY	– Check the fuel pressure and delivery quantity. Refer to fuel system mechanical testing in ⇒ "3.1 Preliminary Check", page 13 and/or to appropriate repair manual. – Check the Fuel Pressure Sensor - G247- . Refer to ⇒ "3.6.17 Fuel Pressure Sensor G247, Checking", page 983 . – Check the Fuel Pressure Regulator Valve - N276- . Refer to ⇒ "3.6.16 Fuel Metering Valve N290, Checking", page 981 . – Check the Fuel Delivery Unit - GX1- / Fuel Pump Control Module - J538- . Refer to ⇒ "3.6.18 Fuel Pump Control Module J538 / Fuel Delivery Unit GX1, Checking", page 985 .

S3, TT 2015 ►
Generic Scan Tool - Edition 12.2017

DTC / Description	Monitor Strategy Description	Malfunction Criteria and Threshold Value	Secondary Parameters with Enable Conditions	Monitoring Time Length	MIL Illum.	Component Diagnostic Procedure
	Fuel Rail Pressure (FRP) rationality check low	• Deviation lambda of controller included adaption -50.00 – 50.00% • And • High pressure controller output > 45 mg • And • Deviation between fuel pressure setpoint and current fuel pressure > 2999.80 kPa • And • Fuel pressure >= 3500.31 kPa	• General: • Engine speed 608 – 6816 rpm • Fuel mass setpoint 5.00 – 1389.00 g/rev • Time after engine start > 10.0 s • Engine warm-up not calibrated • Catalyst heating not calibrated • Full load not calibrated • Catalyst purge not calibrated • Lambda control not calibrated • Evap purge functionality diagnosis not calibrated • Fuel pressure setpoint gradient <= 34777.60 kPa • And • Depending on low dynamic conditions: • Fuel mass setpoint lower range > 5.00 mg/rev • For time >= 10.0 s • Fuel mass setpoint upper range < 187.17 – 229.23 mg/rev • Fuel mass setpoint gradient -1389.00 – 1389.00 mg/rev • For time >= 5.0 s • And • Depending on canister purge: • Canister load not calibrated [-] • Or • Evap purge valve not calibrated			

622 Rep. Gr. ST – Generic Scan Tool

For example, as depicted below the fuel pump with the fuel pressure regulator valve control the fuel flow flowing into the injectors in accordance with the ECM signal. The ECM calculates the fuel amount to be injected based on actual fuel pump parameter (Deviation between reference fuel pressure setpoint and current fuel pressure > 2,999.80 kPa, which is calculated based on various engine conditions) and monitors the rail pressure sensor (fuel injector rail pressure: Fuel pressure < 3,500.31 kPa).

Figure 62

DTC / Description	Monitor Strategy Description	Malfunction Criteria and Threshold Value	Secondary Parameters with Enable Conditions	Monitoring Time Length	MIL Illum.	Component Diagnostic Procedure
P0087 Fuel Rail/ System Pressure - Too Low Bank 1	Fuel System Pressure Sensor, High Pressure Side Out Of Range Low	• Deviation between reference fuel pressure setpoint and current fuel pressure > 2,999.80 kPa • Case: 1 • Deviation lambda of controller included adaption -50.00 – 50.00 % • High pressure controller output > 45 mg • Fuel pressure < 3,500.31 kPa • Case 2: • Fuel pump at max limit • Mass fuel flow setpoint < 1,389.00 mg/rev • Fuel pressure < 34,777.60 kPa	General: • Engine speed 608 – 6,816 rpm • Fuel mass setpoint 5.00 – 1,389.00 mg/rev • Time after engine start > 10.0 s • Engine warm-up not calibrated • Catalyst heating not calibrated • Full load not calibrated • Catalyst purge not calibrated • Lambda control not calibrated • Evap purge functionality diagnosis not calibrated • Fuel pressure setpoint <= 34,777.60 kPa • And • Depending on low dynamic conditions: • Fuel mass setpoint lower range > 5.00 mg/rev • For time >= 10.0 s • Fuel mass setpoint upper range < 187.17 – 229.23 mg/rev • Fuel mass setpoint gradient -1389.00...1389.00 mg/rev • For time >= 5.0 s • And • Depending on canister purge: • Canister load not calibrated [-] • Or • Evap purge valve not calibrated	• 5.0 s • Continuous	• 2 DCY	– Check the fuel pressure and delivery quantity. Refer to fuel system mechanical testing in ⇒ "3.1 Preliminary Check", page 13 and/or to appropriate repair manual. – Check the Fuel Pressure Sensor - G247- . Refer to ⇒ "3.6.17 Fuel Pressure Sensor G247, Checking", page 983 . – Check the Fuel Pressure Regulator Valve - N276- . Refer to ⇒ "3.6.16 Fuel Metering Valve N290 , Checking", page 981 . – Check the Fuel Delivery Unit - GX1- / Fuel Pump Control Module - J538- . Refer to ⇒ "3.6.18 Fuel Pump Control Module J538 / Fuel Delivery Unit GX1, Checking", page 985 .

DTC / Description	Monitor Strategy Description	Malfunction Criteria and Threshold Value	Secondary Parameters with Enable Conditions	Monitoring Time Length	MIL Illum.	Component Diagnostic Procedure
	Fuel Rail Pressure (FRP) rationality check low	• Deviation lambda of controller included adaption -50.00 – 50.00% • And • High pressure controller output > 45 mg • And • Deviation between fuel pressure setpoint and current fuel pressure > 2999.80 kPa • And • Fuel pressure >= 3500.31 kPa	• General: • Engine speed 608 – 6816 rpm • Fuel mass setpoint 5.00 – 1389.00 g/rev • Time after engine start > 10.0 s • Engine warm-up not calibrated • Catalyst heating not calibrated • Full load not calibrated • Catalyst purge not calibrated • Lambda control not calibrated • Evap purge functionality diagnosis not calibrated • Fuel pressure setpoint gradient <= 34777.60 kPa • And • Depending on low dynamic conditions: • Fuel mass setpoint lower range > 5.00 mg/rev • For time >= 10.0 s • Fuel mass setpoint upper range < 187.17 – 229.23 mg/rev • Fuel mass setpoint gradient -1389.00 – 1389.00 mg/rev • For time >= 5.0 s • And • Depending on canister purge: • Canister load not calibrated [-] • Or • Evap purge valve not calibrated			

For example, as shown above, the actual fuel pump parameter required to achieve a desired fuel injector rail pressure (Fuel pump at max limit) is the ECM signal shown below (Deviation between reference fuel pressure setpoint and current fuel pressure > 2,999.80 kPa).

Figure 63

As depicted below a fuel system problem is signaled (DTC P0087) if there is a difference between the ECM signal (actual fuel pump parameter of: current fuel pressure) and the initial fuel pump parameter (fuel pressure setpoint) when it exceeds a predetermined threshold (> 2,999.80 kPa).

DTC / Description	Monitor Strategy Description	Malfunction Criteria and Threshold Value	Secondary Parameters with Enable Conditions	Monitoring Time Length	MIL Illum.	Component Diagnostic Procedure
P0087 Fuel Rail/ System Pressure - Too Low Bank 1	Fuel System Pressure Sensor, High Pressure Side Out Of Range Low	• Deviation between reference fuel pressure setpoint and current fuel pressure > 2,999.80 kPa • Case: 1 • Deviation lambda of controller included adaption -50.00 – 50.00 % • High pressure controller output > 45 mg • Fuel pressure < 3,500.31 kPa • Case 2: • Fuel pump at max limit • Mass fuel flow setpoint < 1,389.00 mg/rev • Fuel pressure < 34,777.60 kPa	General: • Engine speed 608 – 6,816 rpm • Fuel mass setpoint 5.00 – 1,389.00 mg/rev • Time after engine start > 10.0 s • Engine warm-up not calibrated • Catalyst heating not calibrated • Full load not calibrated • Catalyst purge not calibrated • Lambda control not calibrated • Evap purge functionality diagnosis not calibrated • Fuel pressure setpoint <= 34,777.60 kPa • And • Depending on low dynamic conditions: • Fuel mass setpoint lower range > 5.00 mg/rev • For time >= 10.0 s • Fuel mass setpoint upper range < 187.17 – 229.23 mg/rev • Fuel mass setpoint gradient -1389.00...1389.00 mg/rev • For time >= 5.0 s • And • Depending on canister purge: • Canister load not calibrated [-] • Or • Evap purge valve not calibrated	• 5.0 s • Continuous	• 2 DCY	– Check the fuel pressure and delivery quantity. Refer to fuel system mechanical testing in ⇒ "3.1 Preliminary Check", page 13 and/or to appropriate repair manual. – Check the Fuel Pressure Sensor - G247- . Refer to ⇒ "3.6.17 Fuel Pressure Sensor G247, Checking", page 983 . – Check the Fuel Pressure Regulator Valve - N276- . Refer to ⇒ "3.6.16 Fuel Metering Valve N290 , Checking", page 981 . – Check the Fuel Delivery Unit - GX1- / Fuel Pump Control Module - J538- . Refer to ⇒ "3.6.18 Fuel Pump Control Module J538 / Fuel Delivery Unit GX1, Checking", page 985 .

S3, TT 2015 ►
Generic Scan Tool - Edition 12.2017

DTC / Description	Monitor Strategy Description	Malfunction Criteria and Threshold Value	Secondary Parameters with Enable Conditions	Monitoring Time Length	MIL Illum.	Component Diagnostic Procedure
	Fuel Rail Pressure (FRP) rationality check low	• Deviation lambda of controller included adaption -50.00 – 50.00% • And • High pressure controller output > 45 mg • And • Deviation between fuel pressure setpoint and current fuel pressure > 2999.80 kPa • And • Fuel pressure >= 3500.31 kPa	• General: • Engine speed 608 – 6816 rpm • Fuel mass setpoint 5.00 – 1389.00 g/rev • Time after engine start > 10.0 s • Engine warm-up not calibrated • Catalyst heating not calibrated • Full load not calibrated • Catalyst purge not calibrated • Lambda control not calibrated • Evap purge functionality diagnosis not calibrated • Fuel pressure setpoint gradient <= 34777.60 kPa • And • Depending on low dynamic conditions: • Fuel mass setpoint lower range > 5.00 mg/rev • For time >= 10.0 s • Fuel mass setpoint upper range < 187.17 – 229.23 mg/rev • Fuel mass setpoint gradient -1389.00 – 1389.00 mg/rev • For time >= 5.0 s • And • Depending on canister purge: • Canister load not calibrated [-] • Or • Evap purge valve not calibrated			

622 Rep. Gr. ST – Generic Scan Tool

As depicted below a fuel system problem is signaled (DTC P0087) if there is a difference between the ECM signal (actual fuel pump parameter of: current fuel pressure) and the initial fuel pump parameter (fuel pressure setpoint) when it exceeds a predetermined threshold (> 2,999.80 kPa).

"Deviation between reference fuel pressure setpoint and current fuel pressure > 2,999.80 kPa"
Based upon the totality of the foregoing evidence, and based further upon information and belief, the '761 patent Accused Instrumentalities include "a method for detecting failures in a fuel system for a motor vehicle, the fuel system includes a fuel pump providing fuel from a fuel tank to a fuel injector rail of an engine, a fuel pump controller is electrically connected to the fuel

pump and a rail pressure sensor, the rail pressure sensor is attached to the fuel injector rail in fluid communication with fuel being provided from the fuel tank, the method comprises: monitoring an actual fuel pump parameter of the fuel pump and a fuel injector rail pressure; comparing the actual fuel pump parameter required to achieve a desired fuel injector rail pressure to an initial fuel pump parameter to achieve the desired fuel injector rail pressure; and signaling a fuel system problem if a difference between the actual fuel pump parameter and the initial fuel pump parameter exceeds a predetermined threshold."

Figure 64

73. Claim 17 of the '761 patent recites a device for detecting failures in a fuel system of a motor vehicle, the fuel system includes a fuel pump providing fuel from a fuel tank to a fuel injector rail of an engine, a rail pressure sensor is attached to the fuel injector rail in fluid communication with the fuel being provided from the fuel tank, the device comprises: a fuel pump controller being electrically connected to the fuel pump and the rail pressure sensor, the fuel pump controller being configured to monitor an actual fuel pump parameter of the fuel pump and an actual fuel injector rail pressure measured by the rail pressure sensor and to compare the actual fuel pump parameter required to achieve a desired fuel injector rail pressure to an initial fuel pump parameter and to signal a fuel system problem if a difference between the actual fuel pump parameter and the initial fuel pump parameter exceeds a predetermined threshold.

74. On information and belief, the '761 patent Accused Instrumentalities infringe claim 17 of the '761 patent. The '761 patent Accused Instrumentalities comprise a device for detecting failures in a fuel system of a motor vehicle (*Figure 65*), the fuel system includes a fuel pump providing fuel from a fuel tank to a fuel injector rail of an engine (*Figure 65*), a rail pressure sensor is attached to the fuel injector rail in fluid communication with the fuel being provided from the fuel tank (*Figure 66*), the device comprises: a fuel pump controller being electrically connected to the fuel pump and the rail pressure sensor (*Figure 66*), the fuel pump controller being configured to monitor an actual fuel pump parameter of the fuel pump and an

actual fuel injector rail pressure measured by the rail pressure sensor and to compare the actual fuel pump parameter required to achieve a desired fuel injector rail pressure to an initial fuel pump parameter and to signal a fuel system problem if a difference between the actual fuel pump parameter and the initial fuel pump parameter exceeds a predetermined threshold (*Figure 66*).

Fuel system

System overview

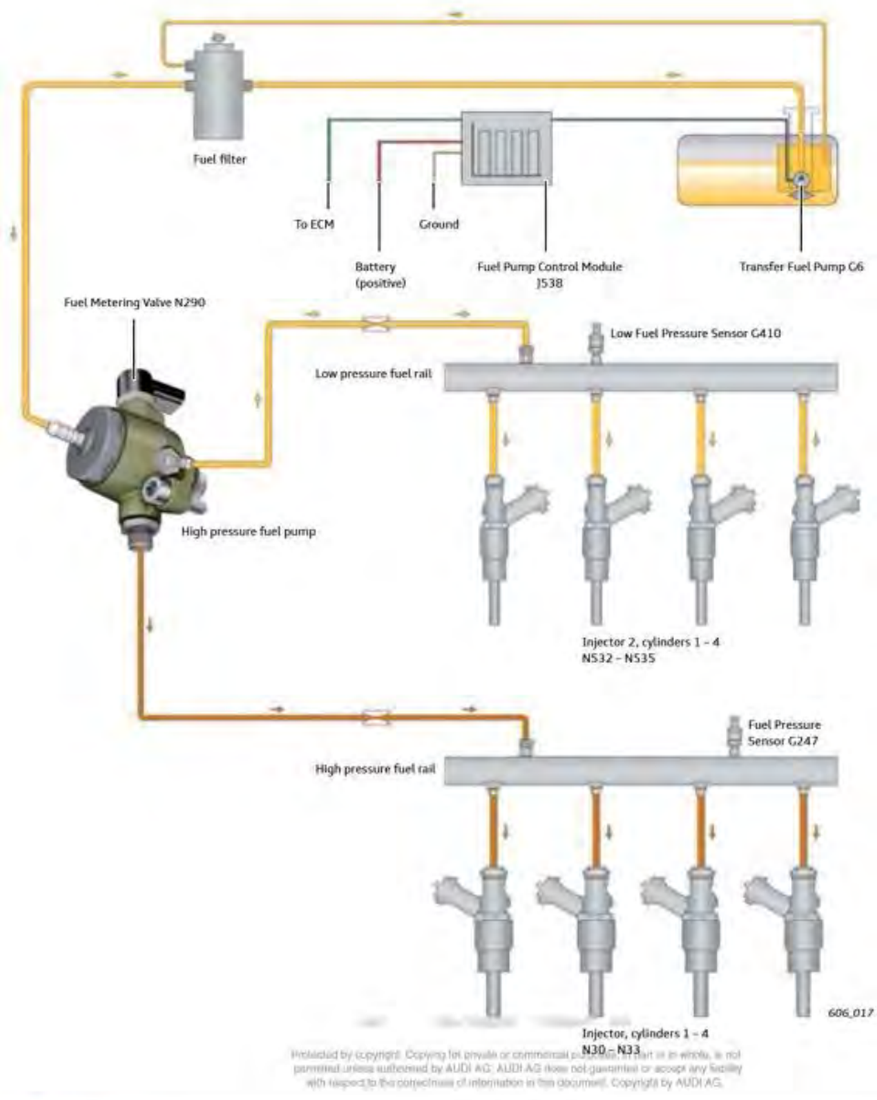

Provided by copyright. Copying for private or commercial purposes, in part or in whole, is not permitted unless authorised by AUDI AG. AUDI AG does not guarantee or accept any liability with respect to the correctness of information in this document. Copyright by AUDI AG.

Note
Only the FSI (high pressure) system will be used on the 2015 A3 engines. The use of MPI and FSI may introduced on later Audi models.

As shown above, the fuel system includes a fuel system includes a fuel pump providing fuel from a fuel tank to a fuel injector rail of an engine, a rail pressure sensor is attached to the fuel injector rail in fluid communication with the fuel being provided from the fuel tank.

Figure 65

As depicted below the fuel pump controller (Powertrain Control Module (PCM)) is electrically connected to the fuel pump and the PCM is electrically connected to the fuel (rail) pressure sensor.

As shown below in DTC P0087, the fuel pump controller, (PCM) is configured to monitor an actual fuel pump parameter (Fuel pump at max limit) and an actual fuel injector rail pressure (current fuel pressure) by the rail pressure sensor (G247) and compares the actual fuel pump parameter required to achieve a desired fuel injector rail pressure to an initial fuel pump parameter (fuel mass setpoint) and to signal a fuel system problem (DTC P0087) if a difference between the actual fuel pump parameter and the initial fuel pump parameter exceeds a predetermined threshold (deviation between fuel pressure setpoint and actual fuel pressure or mass fuel flow setpoint and actual mass fuel flow).

Based upon the totality of the foregoing evidence, and based further upon information and belief, the ’761 patent Accused Instrumentalities include “a device for detecting failures in a fuel system of a motor vehicle, the fuel system includes a fuel pump providing fuel from a fuel tank to a fuel injector rail of an engine, a rail pressure sensor is attached to the fuel injector rail in fluid communication with the fuel being provided from the fuel tank, the device comprises: a fuel pump controller being electrically connected to the fuel pump and the rail pressure sensor, the fuel pump controller being configured to monitor an actual fuel pump parameter of the fuel pump and an actual fuel injector rail pressure measured by the rail pressure sensor and to compare the actual fuel pump parameter required to achieve a desired fuel injector rail pressure to an initial fuel pump parameter and to signal a fuel system problem if a difference between the actual fuel pump parameter and the initial fuel pump parameter exceeds a predetermined threshold.”

2015 Audi TT Quattro Coupe (8J3) L4-2.0L Turbo (CETA)
Vehicle » Powertrain Management » Diagrams » Electrical Diagrams » Diagram 61/15 (Tracks 183-196)

DIAGRAM 61/15 (TRACKS 183-196)

IMPORTANT NOTE:
This manufacturer uses "Track" style wiring diagrams.
For information on how to use these diagrams effectively, please refer to Diagram Information and Instructions. See: Diagrams\Diagram Information and Instructions

Camshaft position sensor, Knock sensor **1**, Fuel pressure sensor, **Intake manifold runner position sensor,** Engine control module

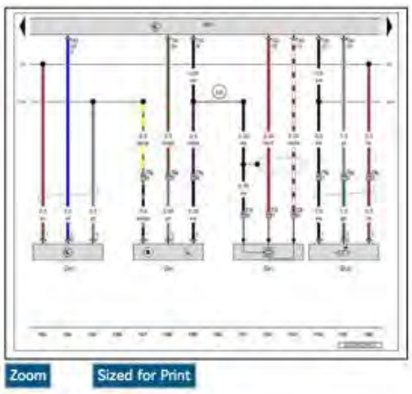

Zoom Sized for Print

ws = white
sw = black
ro = red
br = brown
gn = green
bl = blue
gr = grey
li = lilac
ge = yellow
or = orange
rs = pink

G40 - Camshaft position sensor See: Computers and Control Systems\Locations\Engine Management System
G61 - Knock sensor 1 See: Computers and Control Systems\Locations\Engine Management System
G247 - Fuel pressure sensor See: Computers and Control Systems\Locations\Engine Management System
G336 - Intake manifold runner position sensor See: Computers and Control Systems\Locations\Engine Management System
J623 - Engine control module See: Locations\Components
T3f - 3-pin connector, green
T6p - 6-pin connector, on the engine, front
T60 - 60-pin connector See: Computers and Control Systems\Engine Control Module\Locations
(220) - Sensor ground connection (in engine wiring harness)
(316) - Sensor ground connection 2 (in engine wiring harness)
(D141) - Connection 5V (in engine pre-wiring harness)
(D174) - Connection 5V (in engine pre-wiring harness) 2

Previous See: Diagram 61/14 (Tracks 169-182)

Next See: Diagram 61/16 (Tracks 197-210)

© 2018 ALLDATA LLC. All rights reserved. Terms and Conditions

2015 Audi TT Quattro Coupe (8J3) L4-2.0L Turbo (CETA)
Vehicle » Powertrain Management » Fuel Delivery and Air Induction » Fuel Pressure Regulator » Testing and Inspection » Fuel Pressure Regulator Valve (N276), Checking

FUEL PRESSURE REGULATOR VALVE (N276), CHECKING

Fuel Pressure Regulator Valve (N276), Checking

Function

The Engine Control Module (J623) regulates Fuel Pressure Regulator Valve (N276) directly at the High Pressure Fuel Pump to control the low pressure valve inside the High Pressure Fuel Pump.

Fuel system

System overview

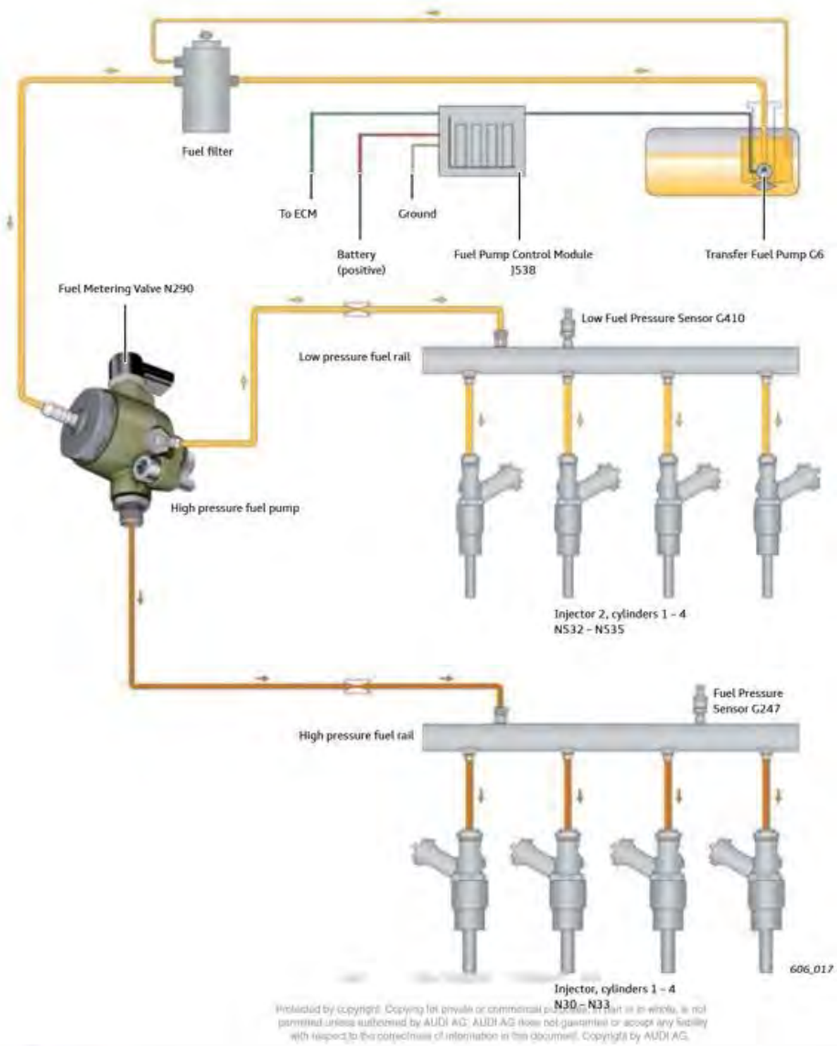

Protected by copyright. Copying for private or commercial purposes, in part or in whole, is not permitted unless authorised by AUDI AG. AUDI AG does not guarantee or accept any liability with respect to the correctness of information in this document. Copyright by AUDI AG.

Note
Only the FSI (high pressure) system will be used on the 2015 A3 engines. The use of MPI and FSI may introduced on later Audi models.

DTC / Description	Monitor Strategy Description	Malfunction Criteria and Threshold Value	Secondary Parameters with Enable Conditions	Monitoring Time Length	MIL Illum.	Component Diagnostic Procedure
P0087 Fuel Rail/ System Pressure - Too Low Bank 1	Fuel System Pressure Sensor, High Pressure Side Out Of Range Low	• Deviation between reference fuel pressure setpoint and current fuel pressure > 2,999.80 kPa • Case: 1 • Deviation lambda of controller included adaption -50.00 – 50.00 % • High pressure controller output > 45 mg • Fuel pressure < 3,500.31 kPa • Case 2: • Fuel pump at max limit • Mass fuel flow setpoint < 1,389.00 mg/rev • Fuel pressure < 34,777.60 kPa	General: • Engine speed 608 – 6,816 rpm • Fuel mass setpoint 5.00 – 1,389.00 mg/rev • Time after engine start > 10.0 s • Engine warm-up not calibrated • Catalyst heating not calibrated • Full load not calibrated • Catalyst purge not calibrated • Lambda control not calibrated • Evap purge functionality diagnosis not calibrated • Fuel pressure setpoint <= 34,777.60 kPa • And • Depending on low dynamic conditions: • Fuel mass setpoint lower range > 5.00 mg/rev • For time >= 10.0 s • Fuel mass setpoint upper range < 187.17 – 229.23 mg/rev • Fuel mass setpoint gradient -1389.00...1389.00 mg/rev • For time >= 5.0 s • And • Depending on canister purge: • Canister load not calibrated [-] • Or • Evap purge valve not calibrated	• 5.0 s • Continuous	• 2 DCY	– Check the fuel pressure and delivery quantity. Refer to fuel system mechanical testing in ⇒ "3.1 Preliminary Check", page 13 and/or to appropriate repair manual. – Check the Fuel Pressure Sensor - G247- . Refer to ⇒ "3.6.17 Fuel Pressure Sensor G247, Checking", page 983 . – Check the Fuel Pressure Regulator Valve - N276- . Refer to ⇒ "3.6.16 Fuel Metering Valve N290 , Checking", page 981 . – Check the Fuel Delivery Unit - GX1- / Fuel Pump Control Module - J538- . Refer to ⇒ "3.6.18 Fuel Pump Control Module J538 / Fuel Delivery Unit GX1, Checking", page 985 .

Figure 66

COUNT XI – INFRINGEMENT OF U.S. PATENT NO. 6,644,115

75. The allegations set forth in the foregoing paragraphs 1 through 74 are incorporated into this Eleventh Claim for Relief.

76. On November 11, 2003 U.S. Patent No. 6,644,115 ("the '115 patent"), entitled "Method and Device for Indicating Liquid Volume in a Tank," was duly and legally issued by

the United States Patent and Trademark Office. A true and correct copy of the ’115 patent is attached as Exhibit 11.

77. Plaintiff is the assignee and owner of the right, title and interest in and to the ’115 patent, including the right to assert all causes of action arising under said patents and the right to any remedies for infringement of them.

78. Upon information and belief, Defendants have directly infringed at least claims 1, 2, 3, and 7 of the ’115 patent by making, using, selling, importing and/or providing and causing to be used the 2012-2018 Tiguan, 2012-2018 Audi A3, 2012-2018 Audi A4, 2012-2018 Audi A5, 2012-2018 Audi A6, 2016-2018 Audi TT, 2015-2018 Audi S3, 2015-2018 VW Golf, 2012-2018 VW Golf GTI, 2015-2018 VW Golf R, 2015-2018 Golf Sportwagon, 2013-2018 Jetta GLI, 2014-2018 VW Jetta Sedan, 2014-2018 VW Passat, 2012-2017 WV CC, 2012-2018 VW Beetle, 2018 VW Atlas, 2015- 2018 Audi Q3, 2012-2018 Audi Q5, and 2017-2018 Porsche Macan with the EA888 engines (the “’115 patent Accused Instrumentalities”).

79. In particular, claim 1 of the ’115 patent recites a system for determining a level of a liquid present in a storage container in an automobile, the system comprising: a liquid level sensor for determining a preliminary liquid level of the liquid stored in the storage container; a vehicle speed sensor for determining the automobile's speed; a transmission gear selection sensor for determining a transmission gear position of a transmission of the automobile; and a processor for receiving input signals from the liquid level sensor, the vehicle speed sensor and the transmission gear selection sensor for modifying the preliminary liquid level to arrive at a final liquid level indication of the liquid present in the storage container when the automobile's speed is equal to zero, the automobile transmission gear is in park position, and the preliminary liquid level exceeds a predetermined threshold.

80. On information and belief, the ’115 patent Accused Instrumentalities infringe claim 1 of the ’115 patent. The ’115 patent Accused Instrumentalities comprise a system for determining a level of a liquid present in a storage container in an automobile (*Figure 67*), the system comprising: a liquid level sensor for determining a preliminary liquid level of the liquid stored in the storage container (*Figure 68*); a vehicle speed sensor for determining the automobile's speed (*Figure 69*); a transmission gear selection sensor for determining a transmission gear position of a transmission of the automobile (*Figure 70*); and a processor for receiving input signals from the liquid level sensor (*Figure 71*), the vehicle speed sensor and the transmission gear selection sensor (*Figure 71*) for modifying the preliminary liquid level to arrive at a final liquid level indication of the liquid present in the storage container when the automobile's speed is equal to zero (*Figure 71*), the automobile transmission gear is in park position, and the preliminary liquid level exceeds a predetermined threshold (*Figure 71*).

The ’115 patent Accused Instrumentalities comprise a Controller Area Network (CAN) system which sends and receives data to and from various microcontrollers in the system. For example, the Fuel Level Sensor (FLS) measures the fuel level in the fuel tank and provides information to the Powertrain Control Module (PCM) and the brake fluid level warning switch measures the brake fluid level and provides information to the anti-lock braking system (ABS) and the Electronic Stability Control System (ESC).

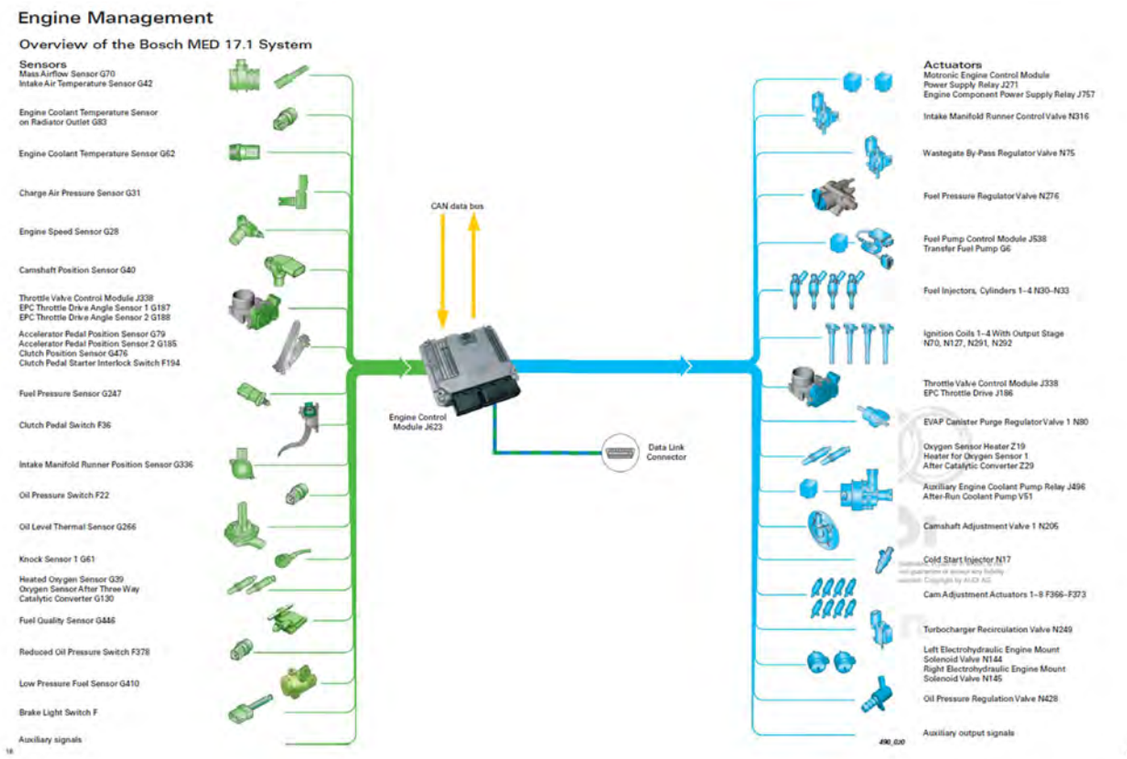

For example, the ’115 patent Accused Instrumentalities comprise a fuel system which includes a fuel level sensor for determining a level of fuel present in the fuel tank.

Fuel Delivery Module

The following components of the fuel delivery module have been modified for bioethanol fuel:

- Guide rods
- Insulation for the electrical wiring
- Fuel Level Sensor G
- Flange
- Corrugated tubes

Protected by copyright. Copying for private or commercial purposes is not permitted unless authorised by AUDI AG. AUDI AG does not guarantee or accept any liability with respect to the correctness of information in this document.

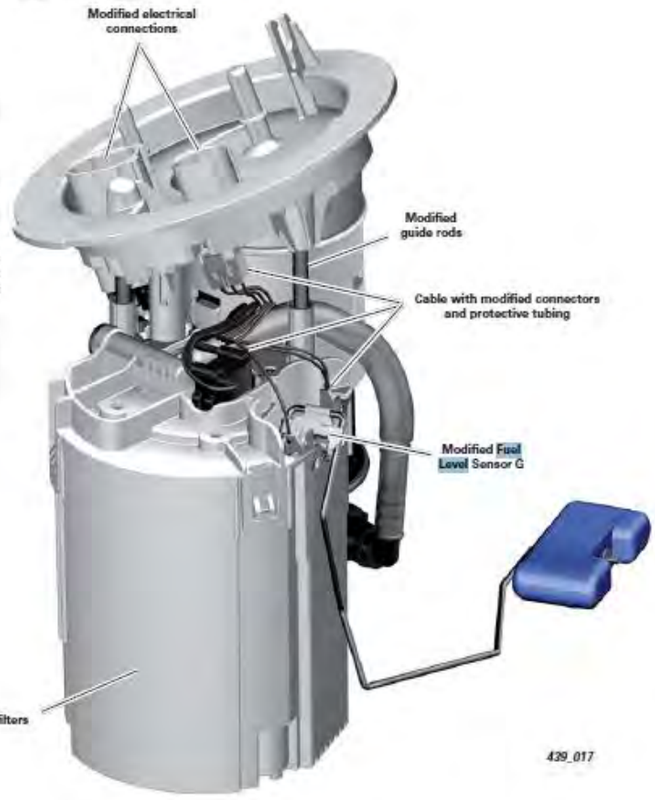

The following components of Transfer Fuel Pump G6 have also been modified for bioethanol fuel:

- Pump housing
- Pump stage
- Connector cover

12

Figure 67

Fuel Delivery Module

The following components of the fuel delivery module have been modified for bioethanol fuel:

- Guide rods
- Insulation for the electrical wiring
- Fuel Level Sensor G
- Flange
- Corrugated tubes

Protected by copyright. Copying for private or commercial purposes is not permitted unless authorised by AUDI AG. AUDI AG does not guarantee or accept any liability with respect to the correctness of information in this document.

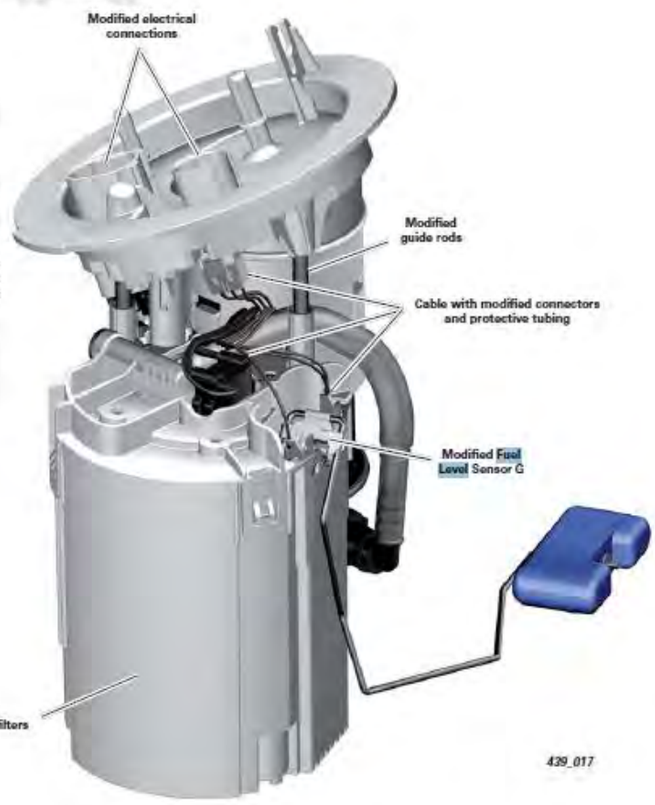

The following components of Transfer Fuel Pump G6 have also been modified for bioethanol fuel:

- Pump housing
- Pump stage
- Connector cover

12

As demonstrated in the exemplary images above, the ’115 patent Accused Instrumentalities include a Fuel Level Sensor (FLS), which is a liquid level sensor. The FLS determines the preliminary liquid level of the fuel (liquid) stored in the storage container (fuel tank).

Figure 68

1 - Right Rear ABS Wheel Speed Sensor - G44-

- ❑ Removing and installing. Refer to ⇒ "4.2 Overview - Rear Axle Speed Sensor", page 37 .
- ❑ Can be tested in "Guided Fault Finding" with the Vehicle Diagnostic Tester

2 - Left Rear ABS Wheel Speed Sensor - G46-

3 - ESP Sensor Unit - G419-

- ❑ 9 Nm
- ❑ Component location: under the left seat
- ❑ Removing and installing. Refer to ⇒ "4.5 ESP Sensor Unit G419 , Removing and Installing", page 42 .
- ❑ Combined transverse acceleration sensor G200, rotation rate sensor G202 and longitudinal acceleration sensor G251.
- ❑ Can be tested in "Guided Fault Finding" with the Vehicle Diagnostic Tester
- ❑ Observe installation instructions
- ❑ Check the arrow in the

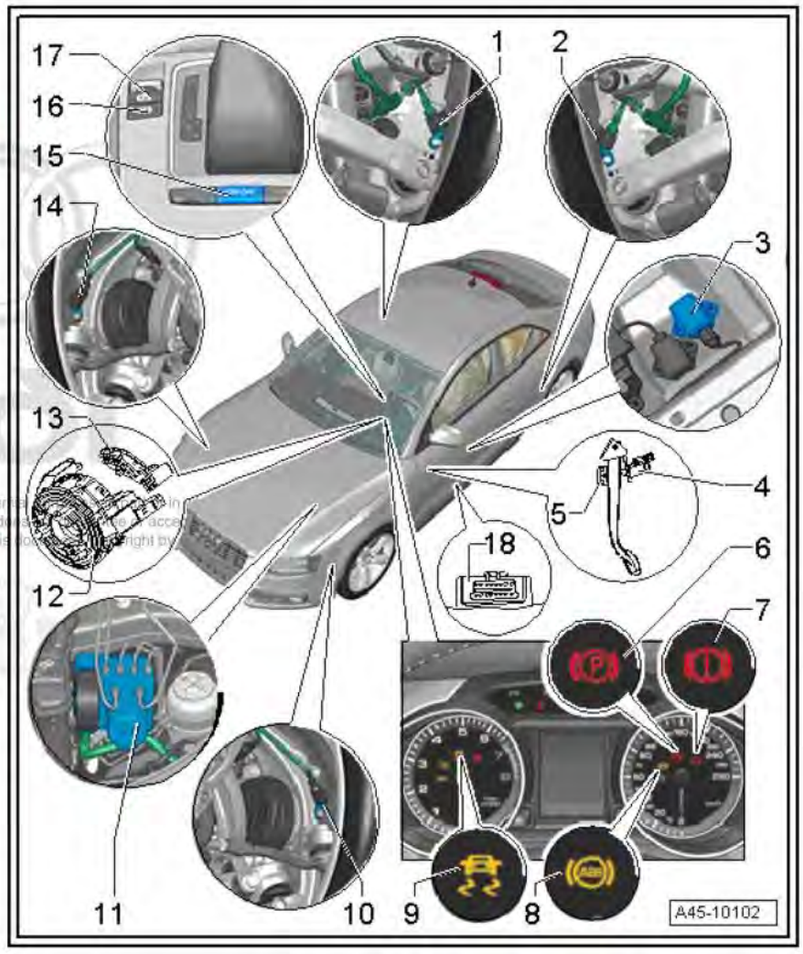

The ESC Module shares the vehicle speed information with the PCM.

3 Control Module and Hydraulic Unit

⇒ "3.1 Overview - Control Module and Hydraulic Unit", page 30

⇒ "3.2 ABS Control Module J104 / ABS Hydraulic Unit N55 , Removing and Installing", page 31

3.1 Overview - Control Module and Hydraulic Unit

1 - ABS Hydraulic Unit - N55- with ABS Control Module - J104-

- Installed location: in the front left engine compartment.
- Removing and Installing. Refer to ⇒ "3.2 ABS Control Module J104 / ABS Hydraulic Unit N55 , Removing and Installing", page 31 .
- The hydraulic control unit is comprised of the ABS hydraulic unit N55 with integrated brake pressure sensor G201 and the ABS control module J104.
- The components must not be separated from each other.
- Do not disconnect the connector before successfully completing OBD.

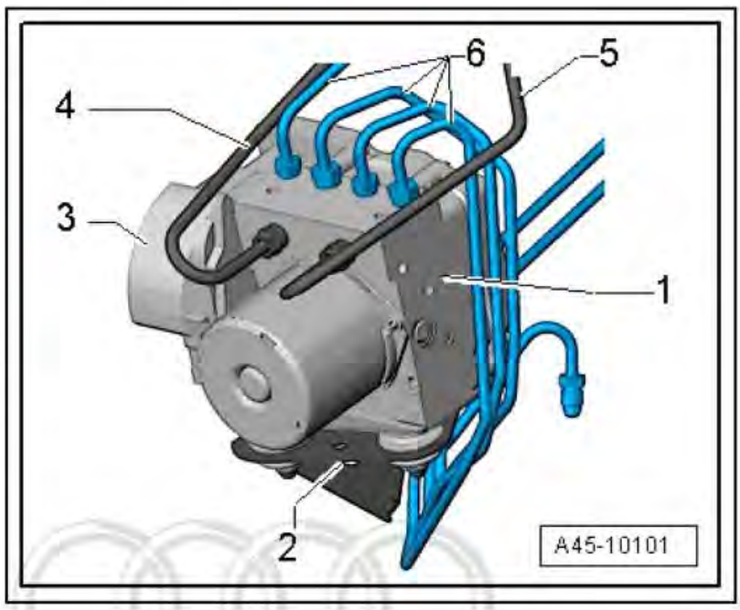

- Switch the ignition off before disconnecting the connector.
- The brake pressure sensor G201 is integrated into the ABS hydraulic unit N55 and cannot be replaced.

> ⚠ Caution
> *The ABS hydraulic unit N55 and ABS control module J104 must not be separated from each other.*

Protected by copyright. Copying for private or commercial purposes, in part or in whole, is not permitted unless authorised by AUDI AG. AUDI AG does not guarantee or accept any liability with respect to the correctness of information in this document. Copyright by AUDI AG.

The Wheel Speed Sensor (WSS) generates a signal having a waveform with a frequency proportional to the speed of the vehicle. The signal generated by the WSS informs the ABS Control Module if the vehicle is moving or not and indicates the velocity of the vehicle. Then, the ABS Control Module informs ECM of this information. The ECM uses this information to control fuel injection, ignition timing, transmission shift points and torque converter clutch scheduling. The WSS signal is also used to detect rough road conditions.

As demonstrated in the exemplary images above, the ’115 patent Accused Instrumentalities include an ABS Wheel Speed Sensor (WSS) for determining the automobile’s speed. The ABS

Wheel Speed Sensor (WSS) generates a signal having a waveform with a frequency proportional to the speed of the vehicle. The signal generated by the ABS WSS informs the ESC Module not only if the vehicle speed is low or high but also if the vehicle is or is not moving. Then, ESC Module informs the PCM of this information. The PCM uses this information to control fuel injection, ignition timing, transmission shift points and torque converter clutch scheduling. The WSS signal is also used to detect rough road conditions.

Figure 69

As demonstrated in the exemplary images below, the inhibitor switch (transmission gear selection sensor) determines the transmission gear position of the transmission of the ’115 patent Accused Instrumentalities.

Audi A4 Component Locations No. 861 / 5

1.4.1 Transmission Control Module

- Location: Transmission Control Module (TCM) -J217- is on the back end of transmission, secured directly to hydraulic control module.

The following components are integrated in Transmission Control Module (TCM) -J217- :

1 - Solenoid Valve 1 -N88-

2 - Automatic Transmission Pressure Regulating Valve 2 -N216-

3 - Automatic Transmission Pressure Regulating Valve 1 -N215-

4 - Transmission Input Speed (RPM) Sensor -G182- and Transmission Input Speed (RPM) Sensor 2 -G612-

5 - Automatic Transmission Hydraulic Pressure Sensor 1 -G193-

6 - Multi-Function Transmission Range (TR) Switch -F125-

7 - Automatic Transmission Hydraulic Pressure Sensor 2 -G194-

8 - Transmission Output Speed (RPM) Sensor -G195-

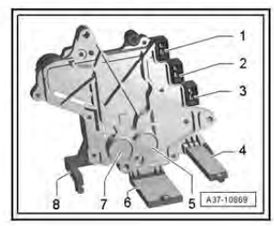

P070500	Transm.Range Sensor "A" Circ.(PRNDL Inp.) Malfunction
P070600	Transm.Range Sensor "A" Circ. Range/Performance
P070700	Transm.Range Sensor "A" Circ. Low Input
P070800	Transm.Range Sensor "A" Circ. High Input
P071000	Transm.Fluid Temp.Sensor Circ. Malfunction
P071100	Transm.Fluid Temp.Sensor Circ. Range/Performance
P071200	Transm.Fluid Temp.Sensor Circ. Low Input
P071300	Transm.Fluid Temp.Sensor Circ. High Input
P071400	Transm.Fluid Temp.Sensor Circ. Intermittent
P071500	Input Turbine/Speed Sensor "A" Circ.
P071600	Input Turbine/Speed Sensor "A"Circ. Range/Performance
P071700	Input Turbine/Speed Sensor "A"Circ. No Signal
P072000	Output Speed Sensor Circ. Malfunction
P072100	Output Speed Sensor Circ. Range/Performance
P072200	Output Speed Sensor Circ. No Signal
P072500	Engine Speed Input Ciruit
P072600	Engine Speed Inp.Circ. Range/Performance
P072700	Engine Speed Inp.Circ. No Signal
P072900	Gear 6 Incorrect Ratio
P072B00	Stuck in Reverse
P072C00	Stuck in Gear 1

Page 11 of 58 12/12/2011

Figure 70

The ECM receives input signals from the Fuel Level Sensor (liquid level sensor) and Fuel Level Sensor 2 via the Instrument Cluster Control Module through the CAN bus.

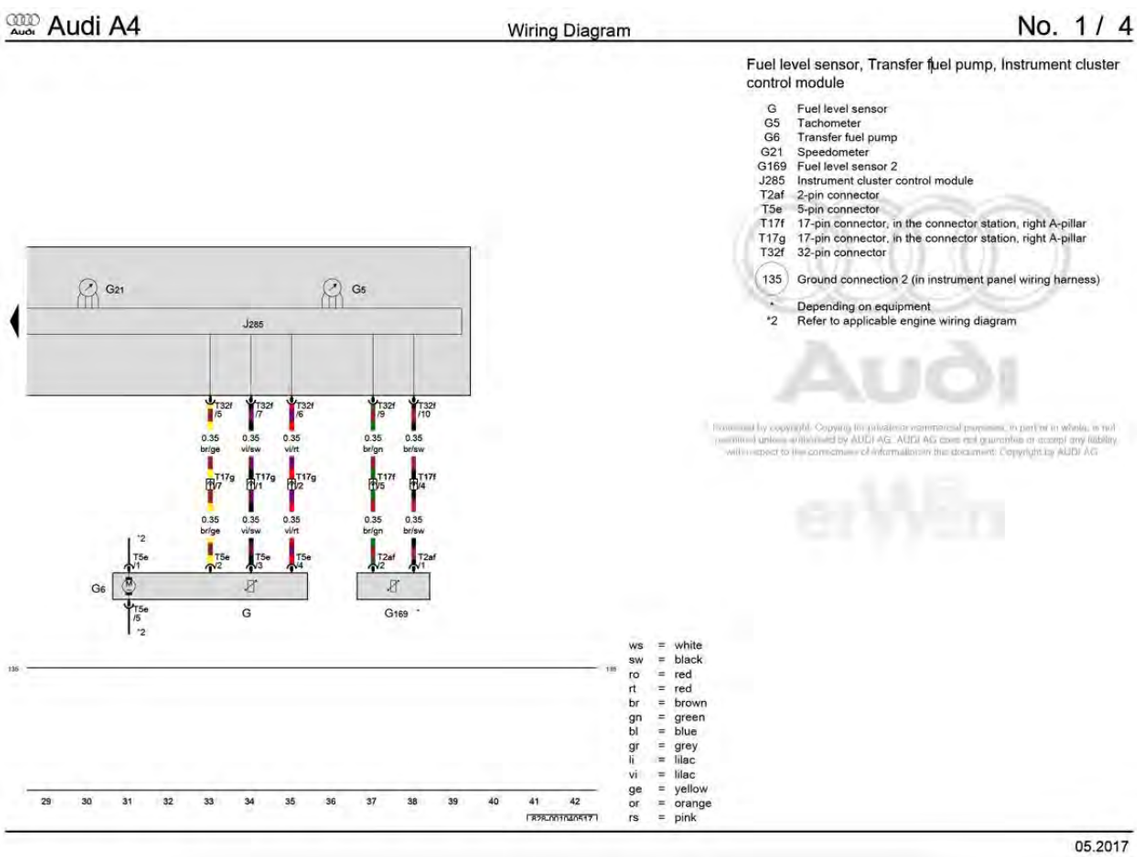

The ’115 patent Accused Instrumentalities comprise a processor for receiving input signals from the vehicle speed sensor, as exemplified by the CAN in the circuit diagram below.

1 - Right Rear ABS Wheel Speed Sensor - G44-

- ❑ Removing and installing. Refer to ⇒ "4.2 Overview - Rear Axle Speed Sensor", page 37 .
- ❑ Can be tested in "Guided Fault Finding" with the Vehicle Diagnostic Tester

2 - Left Rear ABS Wheel Speed Sensor - G46-

3 - ESP Sensor Unit - G419-

- ❑ 9 Nm
- ❑ Component location: under the left seat
- ❑ Removing and installing. Refer to ⇒ "4.5 ESP Sensor Unit G419 , Removing and Installing", page 42 .
- ❑ Combined transverse acceleration sensor G200, rotation rate sensor G202 and longitudinal acceleration sensor G251.
- ❑ Can be tested in "Guided Fault Finding" with the Vehicle Diagnostic Tester
- ❑ Observe installation instructions
- ❑ Check the arrow in the

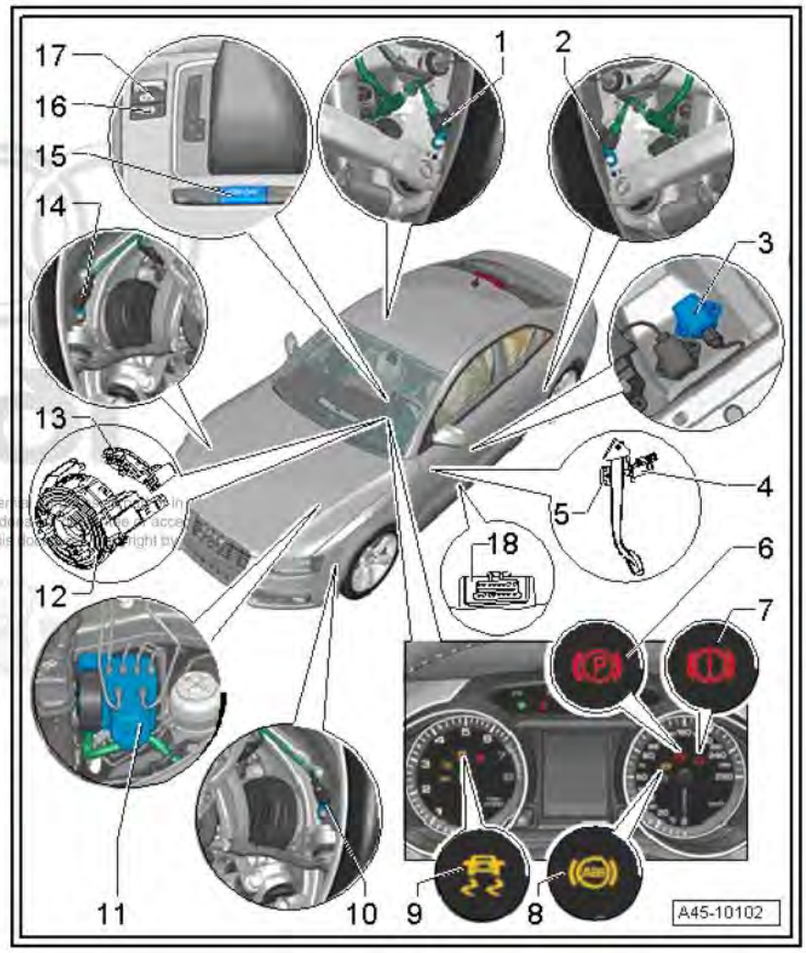

The '115 patent Accused Instrumentalities comprise a processor receiving input signals from the transmission gear selection sensor as exemplified by the figure below which demonstrates the data received from the transmission gear selection sensor.

Audi A4 Component Locations No. 861 / 5

1.4.1 Transmission Control Module

- Location: Transmission Control Module (TCM) -J217- is on the back end of transmission, secured directly to hydraulic control module.

The following components are integrated in Transmission Control Module (TCM) -J217- :

1 - Solenoid Valve 1 -N88-

2 - Automatic Transmission Pressure Regulating Valve 2 -N216-

3 - Automatic Transmission Pressure Regulating Valve 1 -N215-

4 - Transmission Input Speed (RPM) Sensor -G182- and Transmission Input Speed (RPM) Sensor 2 -G612-

5 - Automatic Transmission Hydraulic Pressure Sensor 1 -G193-

6 - Multi-Function Transmission Range (TR) Switch -F125-

7 - Automatic Transmission Hydraulic Pressure Sensor 2 -G194-

8 - Transmission Output Speed (RPM) Sensor -G195-

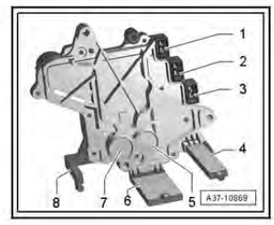

For example, as illustrated above (first picture), the Controller Area Network (CAN) systems include an ECM and other elements that collectively function as a processor for processing the data associated with the preliminary and final liquid levels communicated by the fuel level sensor, and for modifying the preliminary fuel level when the automobile's speed is zero, the automobile transmission gear is in the park position, and when the preliminary liquid level exceeds a predetermined threshold.. The fuel level sensor is in the fuel storage tank, which is the storage container.

Based upon the totality of the foregoing evidence, and based further upon information and belief, the '115 patent Accused Instrumentalities include "a system for determining a level of a liquid present in a storage container in an automobile, the system comprising: a liquid level sensor for determining a preliminary liquid level of the liquid stored in the storage container; a vehicle speed sensor for determining the automobile's speed; a transmission gear selection sensor for determining a transmission gear position of a transmission of the automobile; and a processor for receiving input signals from the liquid level sensor, the vehicle speed sensor and the transmission gear selection sensor for modifying the preliminary liquid level to arrive at a final liquid level indication of the liquid present in the storage container when the automobile's speed is equal to zero, the automobile transmission gear is in park position, and the preliminary liquid level exceeds a predetermined threshold."

Figure 71

81. Claim 2 of the '115 patent recites the system of claim 1, wherein the processor takes a plurality of liquid level readings using the liquid level sensor and then calculates an average to arrive at a preliminary liquid level.

82. On information and belief, the '115 patent Accused Instrumentalities infringe claim 2 of the '115 patent. The '115 patent Accused Instrumentalities comprise, the system of

claim 1, wherein the processor takes a plurality of liquid level readings using the liquid level sensor and then calculates an average to arrive at a preliminary liquid level (*Figure 72*).

As shown below, the PCM continuously monitors the fuel level and generates a filtered fuel level (average) fuel level.

DTC / Description	Monitor Strategy Description	Malfunction Criteria and Threshold Value	Secondary Parameters with Enable Conditions	Monitoring Time Length	MIL Illum.	Component Diagnostic Procedure
P0452 EVAP System Pressure Sensor/ Switch Circuit Low	NVLD Switch Short To Ground	• Signal voltage < 0.24 V	• Case 1: • Engine running • Case 2: • Ignition off • NVLD (EVAP-System) diagnostic mode active	• 0.5 s • Continuous	• 2 DCY	– Check the Fuel Tank Leak Detection Control Module - J909- / Fuel Tank Pressure Sensor - G400- . Refer to ⇒ "3.6.19 Fuel Tank Leak Detection Control Module J909 / Fuel Tank Pressure Sensor G400 , Checking", page 987 .
P0453 EVAP System Pressure Sensor/ Switch Circuit High	NVLD Switch Short To Battery Plus	• Signal voltage > 3.0 V	• Case 1: • Engine running • Case 2: • Ignition off • NVLD (EVAP-System) diagnostic mode active	• 0.5 s • Continuous	• 2 DCY	– Check the Fuel Tank Leak Detection Control Module - J909- / Fuel Tank Pressure Sensor - G400- . Refer to ⇒ "3.6.19 Fuel Tank Leak Detection Control Module J909 / Fuel Tank Pressure Sensor G400 , Checking", page 987 .
P0456 EVAP System Leak Detected (Very Small Leak)	EVAP System Small Leak Functional Check	• Natural vacuum leak detection (NVLD) switch position = open	• Ignition off • Fuel level < 85.10 % • Fuel temperature drop >= 6 K • For time > 1 h • AAT >= 4° C • Barometric pressure > 73.00 kPa • Diff. barometric pressure @ stop and barometric pressure @ start < 0.65 kPa • Time since ignition off > 90 [min] ; < 600 min	• 0.1 s • Once / DCY	• 2 DCY	– Check the EVAP System visually for any leaking hoses or damage to components. – Check the EVAP Canister Purge Regulator Valve 1 - N80- . Refer to ⇒ "3.6.13 EVAP Canister Purge Regulator Valve 1 N80 , Checking", page 975 . – Check the Fuel Tank Leak Detection Control Module - J909- / Fuel Tank Pressure Sensor - G400- . Refer to ⇒ "3.6.19 Fuel Tank Leak Detection Control Module J909 / Fuel Tank Pressure Sensor G400 , Checking", page 987 .

Cockpit overview

The short-term memory collects driving information from the time the ignition is switched on until it is switched off. If you continue driving within two hours after switching the ignition off, the new values are included when calculating the current trip information.

Unlike the short-term memory, the long-term memory is not erased automatically. You can select the time period for evaluating trip information yourself.

Fuel consumption

The current fuel consumption can be shown using a bar graph ⇨ *fig. 14*. The average consumption stored in the short-term memory is also displayed. If the bars are green or the gray tone on the bars changes (depending on the equipment), your vehicle is saving fuel by the following function:

– **Recuperation**: electrical energy can be stored in the vehicle battery when the vehicle is coasting or driving downhill. The bar will move toward ⇨/⇨.

Tips

The date, time of day and time and date format can be set in the Infotainment system ⇨ *page 251*.

Energy consumers

Fig. 15 Instrument cluster: energy consumers

In the **Energy consumers** view, the other equipment that is currently affecting fuel consumption is listed in the first tab (on-board computer). The display shows up to three energy consumers Ⓑ ⇨ *fig. 15*. The equipment using the most power is listed first. If more than three items using power are switched on, the equipment that is currently using the most power is displayed.

A gauge Ⓐ also shows the current total consumption of all other consumers.

Radio

Applies to: vehicles with multifunction steering wheel

▸ Press the MODE button on the multifunction steering wheel repeatedly until the Radio/Media tab is displayed.

Applies to: vehicles with multifunction steering wheel plus

▸ Press the button repeatedly until the Radio/Media tab is displayed.

▸ Press the left control button ⇨ *page 14*.

Depending on vehicle equipment, the following functions may be available in the driver information system.

– **Selecting the frequency band**: select and confirm a frequency band.

– **Selecting a station from the station list**: select and confirm a radio station.

– **Selecting a station from the presets list**: select and confirm **Presets** and then a radio station.

– **Opening a media source**: select and confirm **Switch to media**.

Additional settings

– Select: right control button > *desired entry*.

Depending on the function selected, the following additional settings may be possible:

– **"Now Playing" screen**: see ⇨ *page 229*.

Media

Requirement: a media drive must contain audio/video files ⇨ *page 231*.

Applies to: vehicles with multifunction steering wheel

▸ Press the MODE button on the multifunction steering wheel repeatedly until the Radio/Media tab is displayed.

18

On information and belief, information proving that this claim element is present is not publicly available, and only in the possession of Audi. However, in my opinion this element is highly likely present in the '115 patent Accused Instrumentalities. The source code for the ECM is necessary to further support that which has been inferred.

Figure 72

83. Claim 3 of the '115 patent recites the system of claim 1, wherein the processor monitors an ignition key position to determine when to initialize the system.

84. On information and belief, the ’115 patent Accused Instrumentalities infringe claim 3 of the ’115 patent. The ’115 patent Accused Instrumentalities comprise, the system of claim 1, wherein the processor monitors an ignition key position to determine when to initialize the system (*Figure 73*).

Driving

Starting and stopping the engine

Starting the engine

The START ENGINE STOP button switches the ignition on and starts the engine.

Fig. 97 Cockpit: START ENGINE STOP button

Starting the engine

Applies to: vehicles with manual transmission

- Press the clutch pedal all the way down and move the shift lever to the neutral position.

Applies to: vehicles with automatic transmissions

- Press the brake pedal.
- Press the START ENGINE STOP button ⇨ *fig. 97*. The engine will start.
- There may be a slight delay when starting the engine in diesel vehicles in colder temperatures. Therefore, you must continue pressing the clutch pedal (manual transmission) or the brake pedal (automatic transmission) until the engine starts. The indicator light turns on while the engine is preheating.

Switching the ignition on/off

If you would like to switch the ignition on without starting the engine, follow these steps:

- Press the START ENGINE STOP button without pressing the clutch pedal (for manual transmissions) or the brake pedal (for automatic transmissions). Vehicles without the Start/Stop system*: the needle in the tachometer moves into the **READY** position.
- To switch the ignition off, press the button again. The needle in the tachometer moves into the **OFF** position.

The prewarming runs automatically in diesel vehicles when the ignition is switched on.

Equipment that uses a lot of electricity is switched off temporarily when you start the engine.

If the engine does not start immediately, the starting procedure stops automatically after a short time. Repeat the starting procedure.

Start/Stop system*

See the information in ⇨ *page 91, Start/Stop system.*

WARNING

To reduce the risk of poisoning, never allow the engine to run in confined spaces.

Note

Avoid high engine speed, full throttle, and heavy engine load if the engine has not reached operating temperature yet. You could damage the engine.

For the sake of the environment

Do not let the engine run while parked to warm up. Begin driving immediately. This reduces unnecessary emissions.

Tips

- Some noise after starting the engine is normal and is no cause for concern.
- If you leave the vehicle with the ignition switched on, the ignition will switch off after a certain amount of time. Make sure that electrical equipment such as the exterior lights are switched off.

Starting the engine

- Bring the vehicle to a full stop.
- Press the START ENGINE STOP button ⇨ *page 89, fig. 97.*

8W6012721BA

89

As shown above, the PCM initializes when the ignition is turned on.

Figure 73

85. Claim 7 of the ’115 patent recites the system of claim 1, wherein the processor monitors the vehicle's speed.

86. On information and belief, the ’115 patent Accused Instrumentalities infringe claim 3 of the ’115 patent. The ’115 patent Accused Instrumentalities comprise, the system of claim 1, wherein the processor monitors the vehicle's speed (*Figure 74*).

Audi A4 2008 ➤ , Audi A5 Cabriolet 2009 ➤ , Audi A5 Coupé 2008 ➤
Brake System - Edition 03.2017

1 - Right Rear ABS Wheel Speed Sensor - G44-
- ❑ Removing and installing. Refer to ⇒ "4.2 Overview - Rear Axle Speed Sensor", page 37 .
- ❑ Can be tested in "Guided Fault Finding" with the Vehicle Diagnostic Tester

2 - Left Rear ABS Wheel Speed Sensor - G46-

3 - ESP Sensor Unit - G419-
- ❑ 9 Nm
- ❑ Component location: under the left seat
- ❑ Removing and installing. Refer to ⇒ "4.5 ESP Sensor Unit G419 , Removing and Installing", page 42 .
- ❑ Combined transverse acceleration sensor G200, rotation rate sensor G202 and longitudinal acceleration sensor G251.
- ❑ Can be tested in "Guided Fault Finding" with the Vehicle Diagnostic Tester
- ❑ Observe installation instructions
- ❑ Check the arrow in the

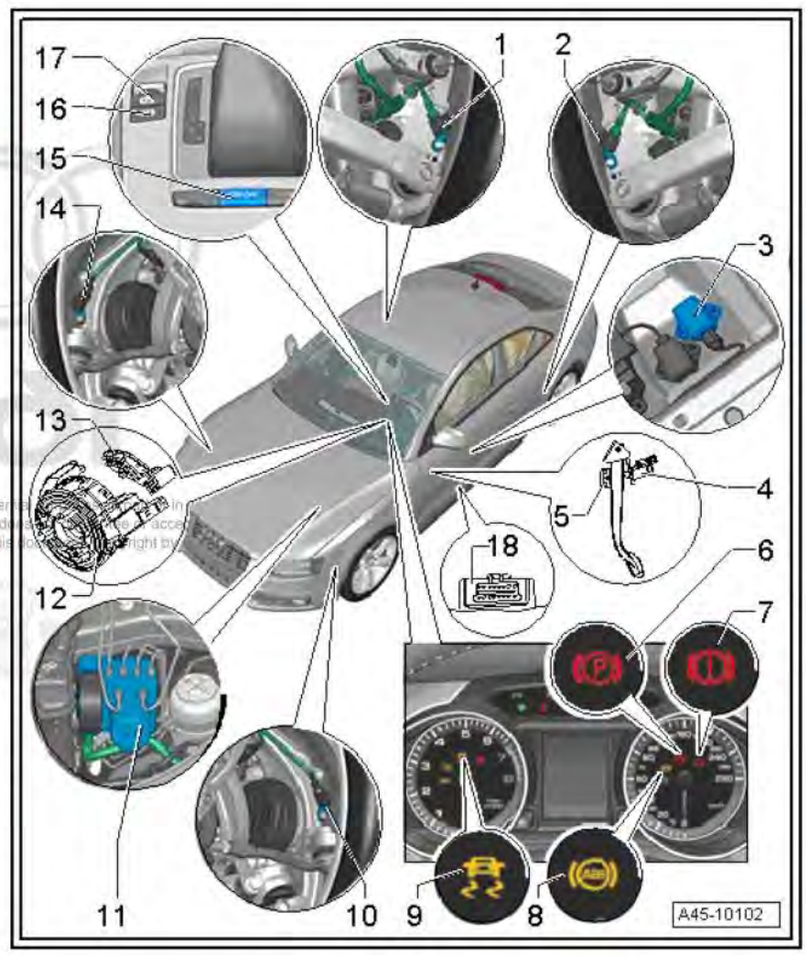

As shown above, the ’115 patent Accused Instrumentalities include an ABS Wheel Speed Sensor (WSS) for determining the automobile’s speed. The ABS Wheel Speed Sensor (WSS) generates a signal having a waveform with a frequency proportional to the speed of the vehicle. The signal generated by the ABS WSS informs the ESC Module not only if the vehicle speed is low or high but also if the vehicle is or is not moving. Then, ESC Module informs the PCM of this

information. The PCM uses this information to control fuel injection, ignition timing, transmission shift points and torque converter clutch scheduling. The WSS signal is also used to detect rough road conditions.

Figure 74

COUNT XII – INFRINGEMENT OF U.S. PATENT NO. 6,581,574

87. The allegations set forth in the foregoing paragraphs 1 through 86 are incorporated into this Twelfth Claim for Relief.

88. On June 24, 2014 U.S. Patent No. 6,581,574 ("the '574 patent"), entitled "Method for Controlling Fuel Rail Pressure," was duly and legally issued by the United States Patent and Trademark Office. A true and correct copy of the '574 patent is attached as Exhibit 12.

89. Plaintiff is the assignee and owner of the right, title and interest in and to the '574 patent, including the right to assert all causes of action arising under said patents and the right to any remedies for infringement of them.

90. Upon information and belief, Defendants have directly infringed at least claims 1 and 7 of the '574 patent by making, using, selling, importing and/or providing and causing to be used the 2015-2018 Jetta (1.4L) or other vehicles having incorporated the DTI engine (the "'574 patent Accused Instrumentalities").

91. In particular, claim 1 of the '574 patent recites a method of controlling the fuel pressure within a fuel delivery system having a fuel pump which delivers fuel to a fuel rail of an internal combustion engine comprising: providing a set-point fuel pressure; providing the estimated average fuel flow through the system; generating a feed forward control signal based upon the set-point fuel pressure and the average fuel flow; measuring the fuel rail pressure with a fuel pressure sensor; filtering the output of the fuel pressure sensor to filter out pulses due to the opening and closing of the fuel injectors; comparing the fuel rail pressure to the set-point fuel pressure and generating an error signal based upon the difference between the fuel rail pressure

and the set-point fuel pressure; and modifying the feed forward control signal based upon the error signal thereby generating a motor controller signal and sending the motor control signal to the fuel pump motor.

92. On information and belief, the ’574 patent Accused Instrumentalities infringe claim 1 of the ’574 patent. The ’574 patent Accused Instrumentalities practice a method of controlling (*Figure 75*) the fuel pressure within a fuel delivery system having a fuel pump which delivers fuel to a fuel rail of an internal combustion engine (*Figure 75*) comprising: providing a set-point fuel pressure (*Figure 75*); providing the estimated average fuel flow through the system (*Figure 76*); generating a feed forward control signal based upon the set-point fuel pressure and the average fuel flow (*Figure 77*); measuring the fuel rail pressure with a fuel pressure sensor (*Figure 78*); filtering the output of the fuel pressure sensor to filter out pulses due to the opening and closing of the fuel injectors (*Figure 79*); comparing the fuel rail pressure to the set-point fuel pressure and generating an error signal based upon the difference between the fuel rail pressure and the set-point fuel pressure (*Figure 80*); and modifying the feed forward control signal based upon the error signal thereby generating a motor controller signal and sending the motor control signal to the fuel pump motor (*Figure 81*).

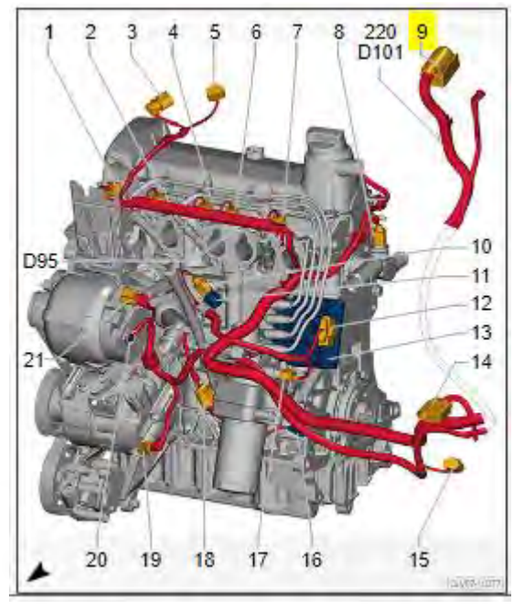

For example, the 1.4LTSI engine is an internal combustion engine.

As demonstrated in the exemplary images above (9) and below, the ’574 patent Accused Instrumentalities comprise an Engine Control Module (ECM; 9; J623) and Powertrain CAN bus (B383, B390) which practice a method of controlling the fuel delivery system in conjunction with a fuel rail pressure sensor (1).

Jetta Wiring Diagram No. 99 / 14

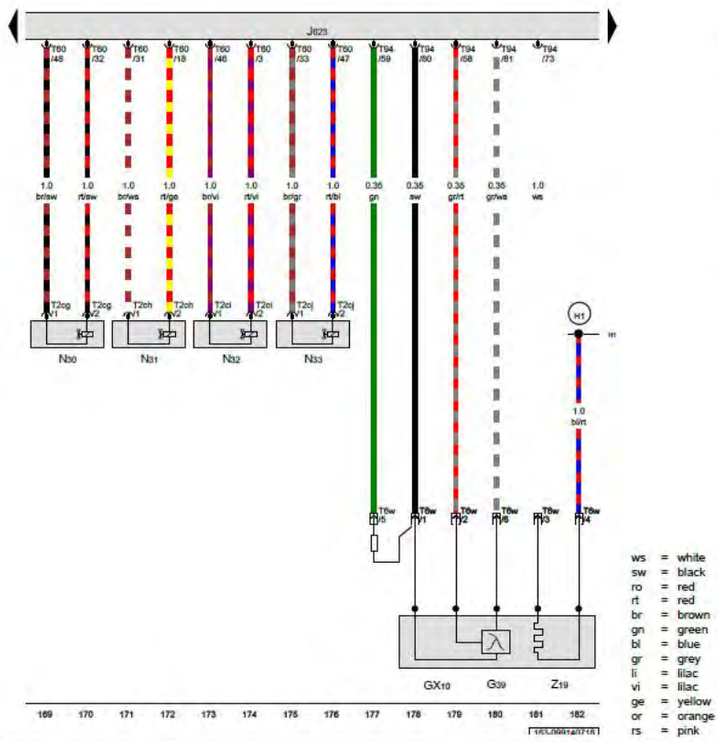

Oxygen sensor 1 before catalytic converter, Heated oxygen sensor, Engine control module, Cylinder 1 fuel injector, Cylinder 2 fuel injector, Cylinder 3 fuel injector, Cylinder 4 fuel injector

GX10	Oxygen sensor 1 before catalytic converter
G39	Heated oxygen sensor
J623	Engine control module
N30	Cylinder 1 fuel injector
N31	Cylinder 2 fuel injector
N32	Cylinder 3 fuel injector
N33	Cylinder 4 fuel injector
T2cg	2-pin connector
T2ch	2-pin connector
T2ci	2-pin connector
T2cj	2-pin connector
T6w	6-pin connector, in the engine compartment, rear
T60	60-pin connector
T94	94-pin connector
Z19	Oxygen sensor heater
H1	Positive connection (in oxygen sensor wiring harness)

ws	=	white
sw	=	black
ro	=	red
rt	=	red
br	=	brown
gn	=	green
bl	=	blue
gr	=	grey
li	=	lilac
vi	=	lilac
ge	=	yellow
or	=	orange
rs	=	pink

07.2016

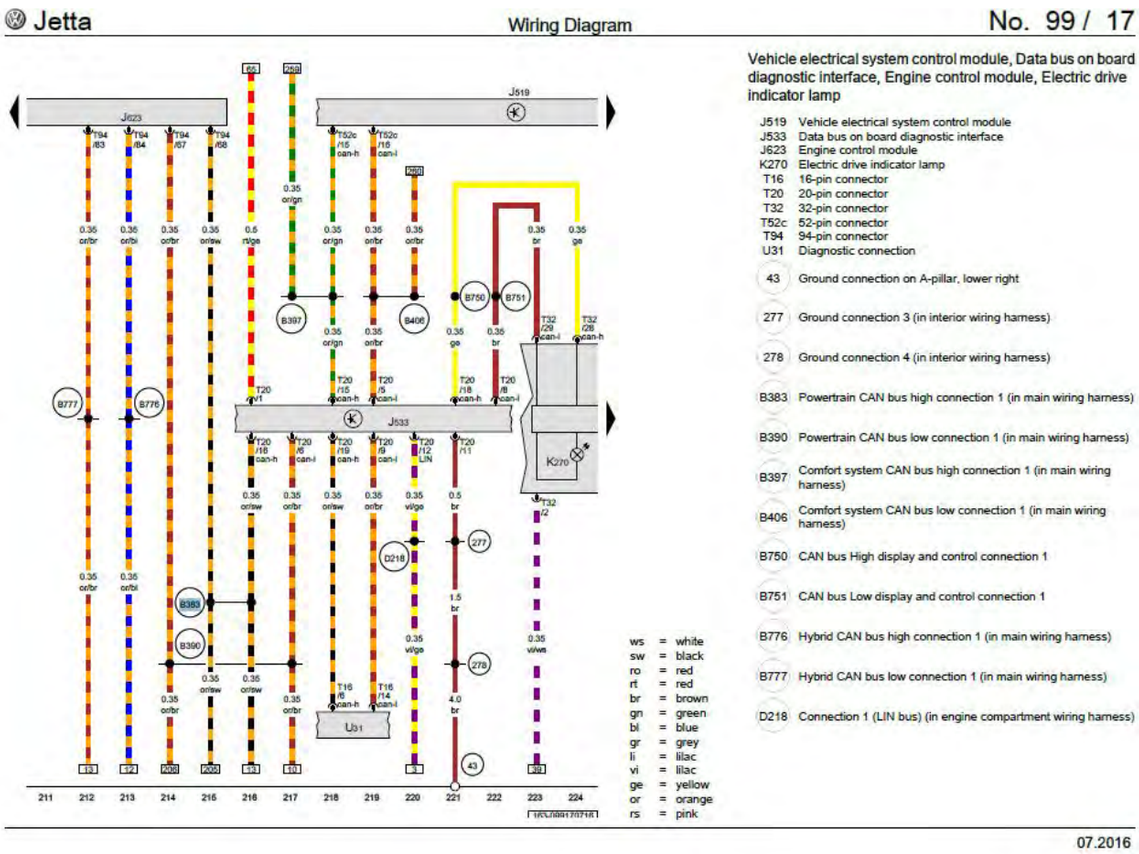

The Fuel Pressure regulator valve (8; N276) controls the pressure of the fuel flow directly into the fuel rail and therefore, to the fuel injectors in accordance with the ECM signal based on engine conditions.

2016 Volkswagen Jetta Sedan (163) L4-1.4L Turbo (CZTA)

Vehicle » Powertrain Management » Fuel Delivery and Air Induction » Fuel Pressure Regulator » Testing and Inspection

TESTING AND INSPECTION

Fuel Pressure Regulator Valve (N276), Checking

General Description

The Engine Control Module (J623) regulates the Fuel Pressure Regulator Valve (N276) directly at the High Pressure Fuel Pump to control the low pressure valve inside the High Pressure Fuel Pump.

Source: ALLDATA Pro

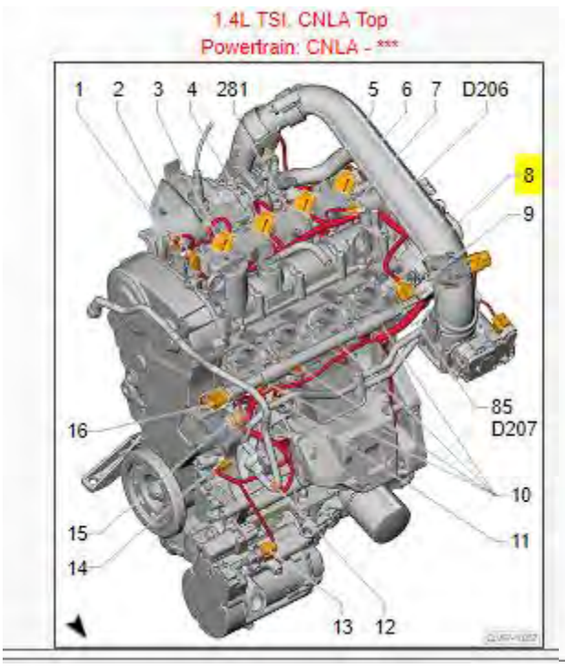

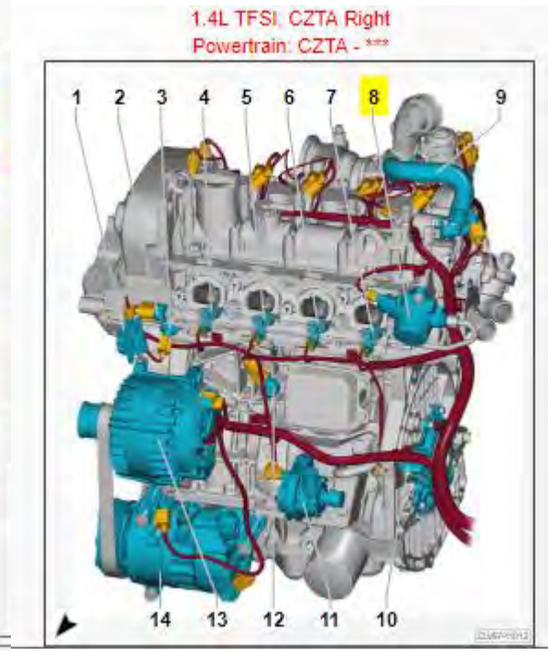

Jetta Wiring Diagram No. 99 / 13

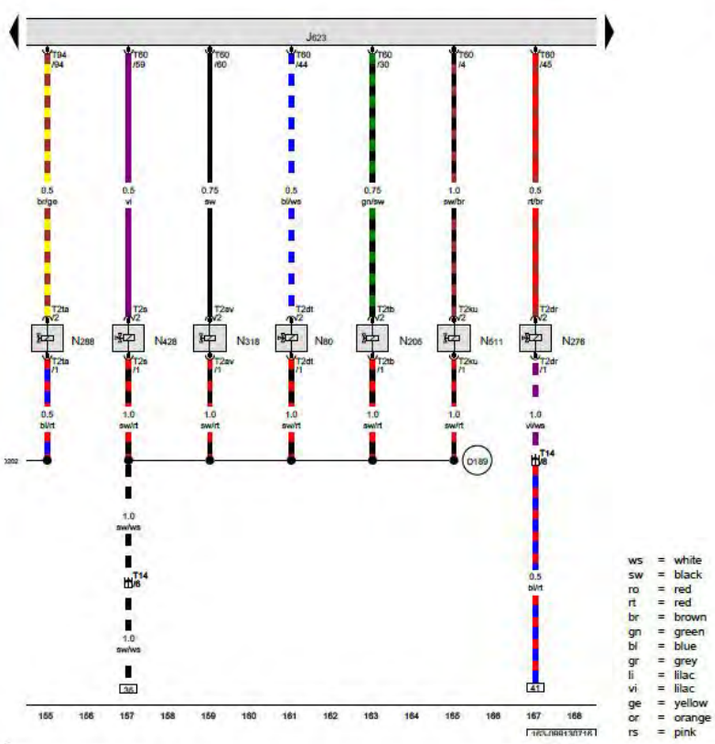

Engine control module, EVAP canister purge regulator valve 1, Camshaft adjustment valve 1, Fuel pressure regulator valve, Exhaust camshaft adjustment valve 1, Oil pressure regulation valve, Decoupler pressure actuator

J623	Engine control module
N80	EVAP canister purge regulator valve 1
N205	Camshaft adjustment valve 1
N276	Fuel pressure regulator valve
N288	Tank switch-off valve
N318	Exhaust camshaft adjustment valve 1
N428	Oil pressure regulation valve
N511	Decoupler pressure actuator
T2av	2-pin connector
T2dr	2-pin connector
T2dt	2-pin connector
T2ku	2-pin connector
T2s	2-pin connector
T2ta	2-pin connector
T2tb	2-pin connector
T14	14-pin connector
T60	60-pin connector
T94	94-pin connector
D189	Connection 87a (in engine pre-wiring harness)
D202	Connection 6 (87a) (in engine compartment wiring harness)

ws = white
sw = black
ro = red
rt = red
br = brown
gn = green
bl = blue
gr = grey
li = lilac
vi = lilac
ge = yellow
or = orange
rs = pink

07.2016

The ’574 patent Accused Instrumentalities comprise a Fuel delivery unit (6; GX1) and Fuel Pump Control Module (7; J538), which controls a fuel pump delivering fuel to a High-Pressure Fuel Pump, connected to a fuel rail of an internal combustion engine.

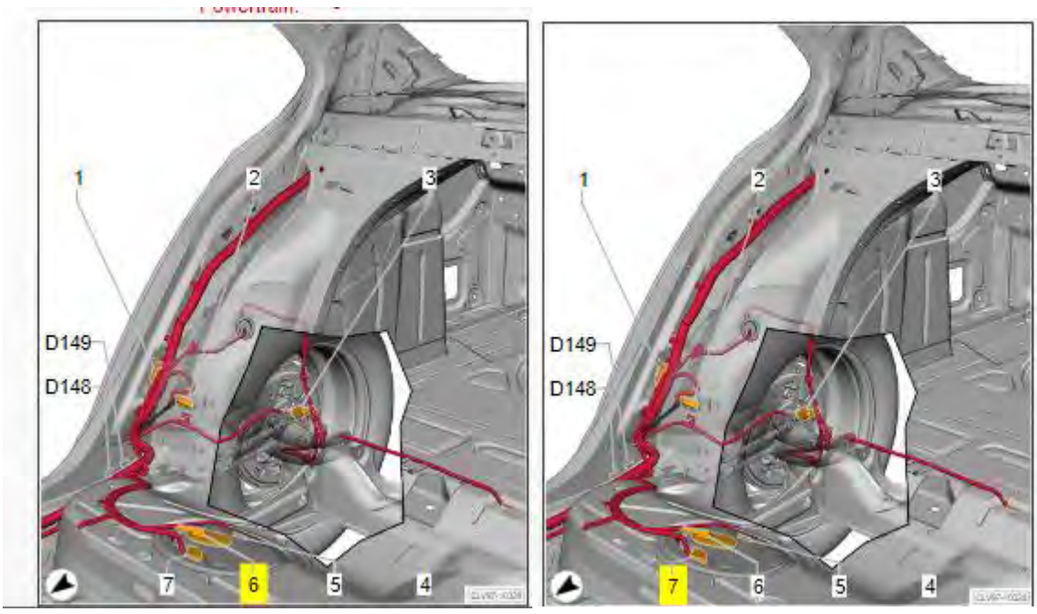

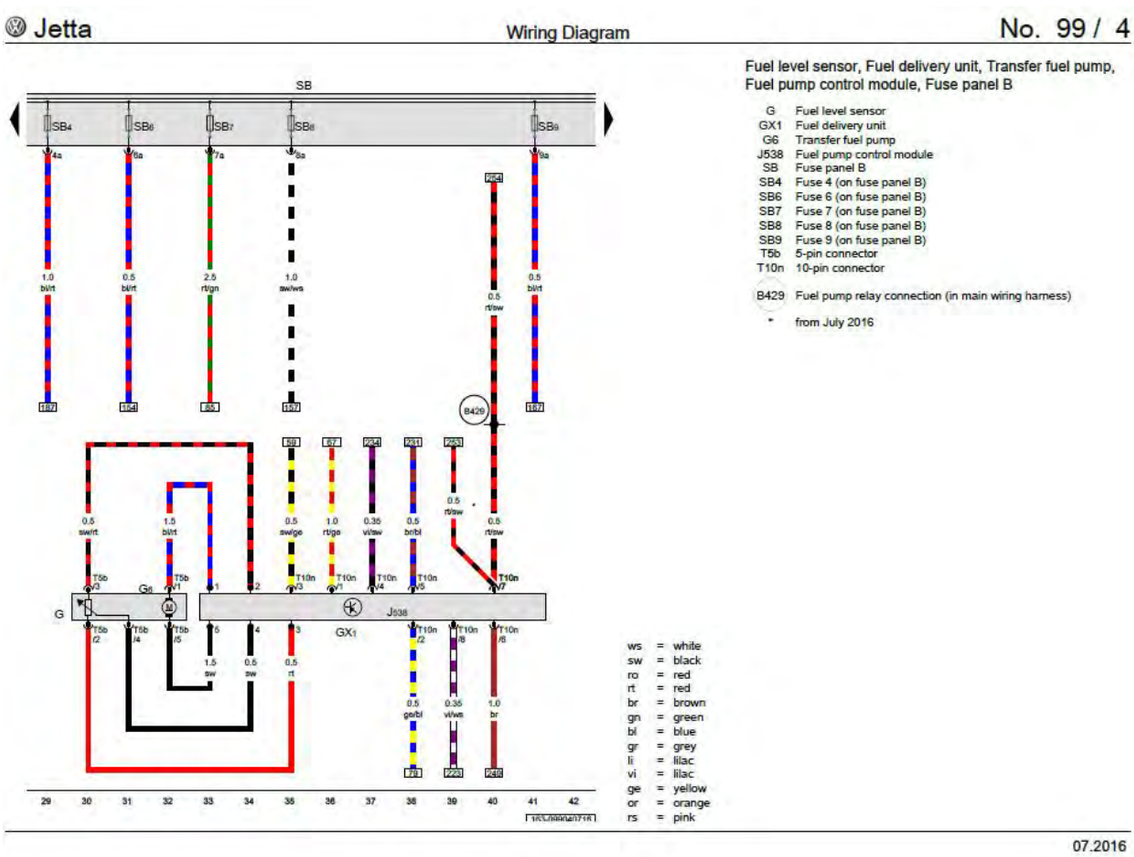

2016 Volkswagen Jetta Sedan (163) L4-1.4L Turbo (CZTA)

Vehicle » Powertrain Management » Fuel Delivery and Air Induction » Fuel Pump » Testing and Inspection » Fuel Delivery Unit (GX1)/Fuel Pump Control Module (J538), Checking

FUEL DELIVERY UNIT (GX1)/FUEL PUMP CONTROL MODULE (J538), CHECKING

Fuel Delivery Unit (GX1)/Fuel Pump Control Module (J538), Checking

General Description

The Engine Control Module (J623) tells the Fuel Pump Control Module (J538) the demand needed for fuel volume and pressure and activates the Transfer Fuel Pump (G6). The Transfer Fuel Pump (G6) transfers fuel to the rest of the fuel system, where it is monitored by the Engine Control Module (J623) through sensors, and controlled through regulators and/or metering valves.

Source: ALLDATA Pro

http://212.62.78.144/iwire/i-wire_data.html?eslpUrl=MEX5R0106099

For example, the fuel pump (13) shown below, delivers fuel to a fuel rail (shown below) of a fuel delivery system.

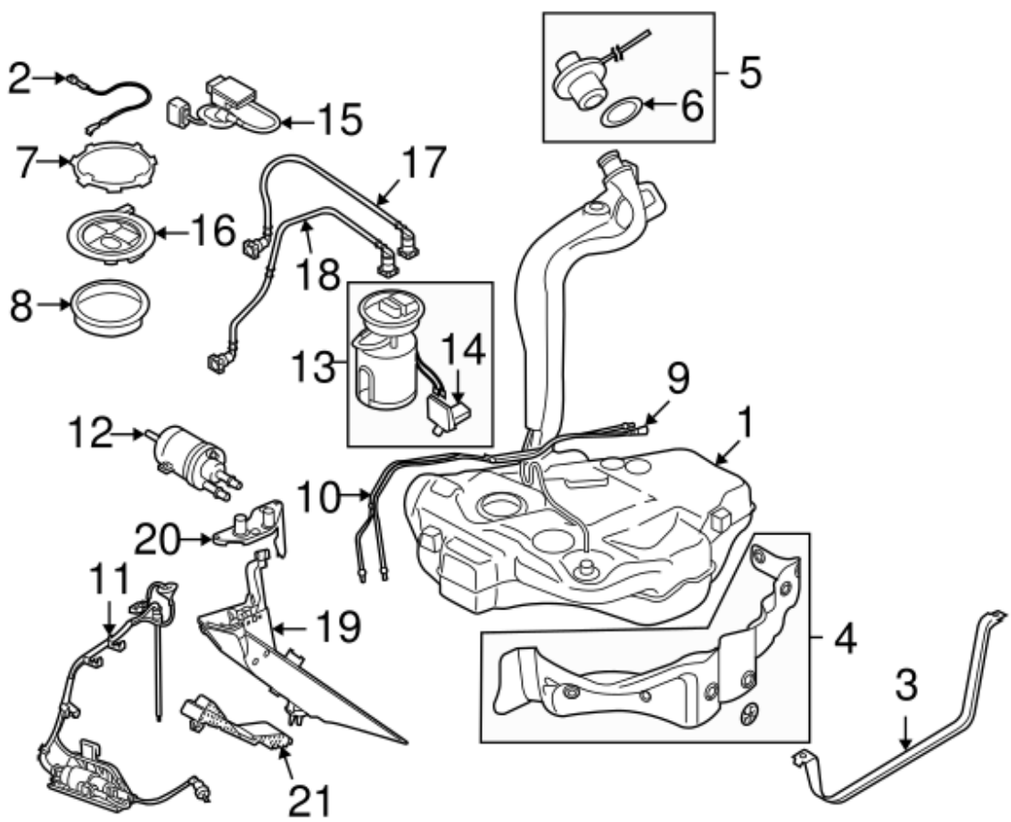

https://www.worldoemparts.com/world-vw-parts/oem-parts/volkswagen-fuel-pump-assembly-seal-1j0919133b/?c=YT12b2xrc3dhZ2Vu

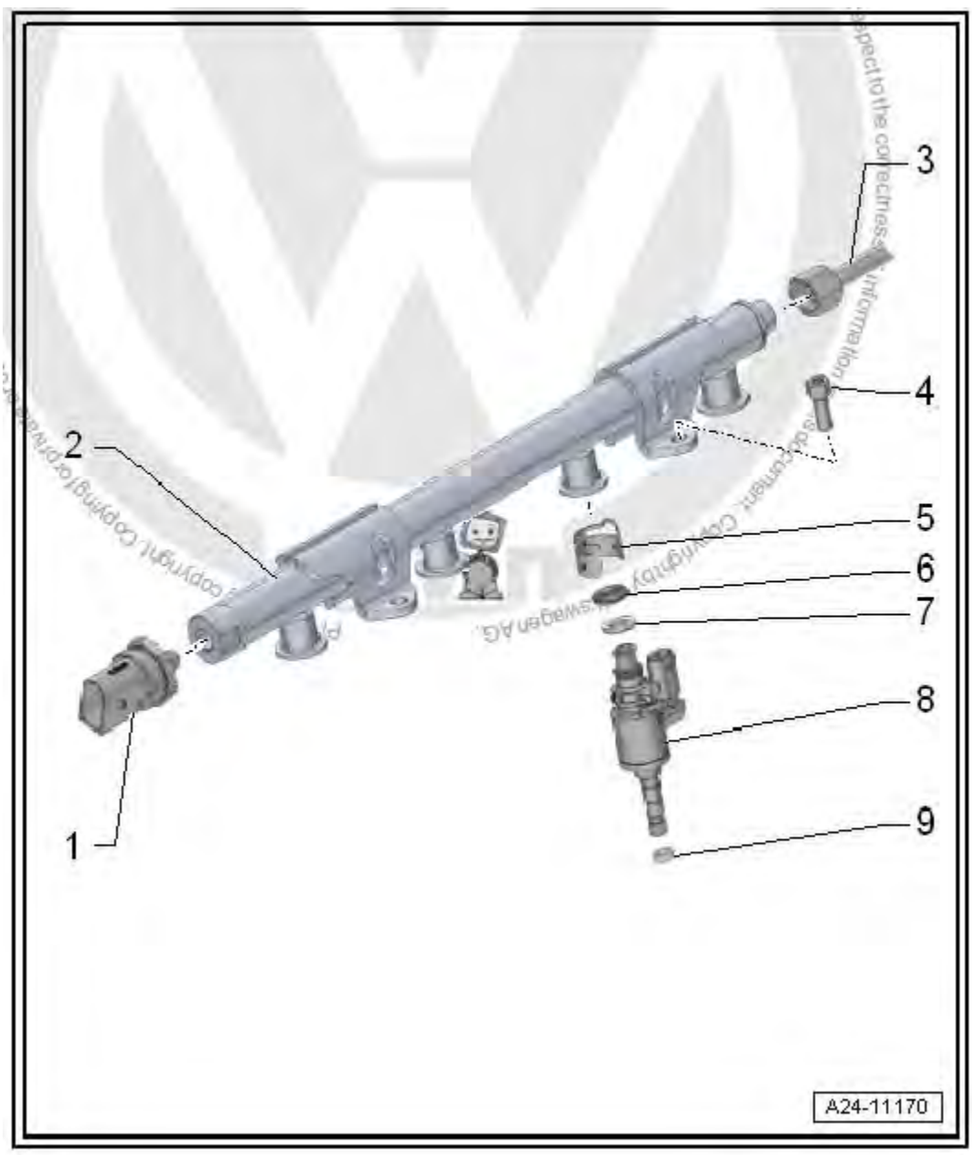

Jetta 2011 ➤, Jetta 2015 ➤ 4-Cylinder Direct Injection (1.4L Engine, 4V, EA 211, Turbocharger, Hybrid) - Edition 12.2017

Upon information and belief, the fuel (rail) pressure sensor (1), shown immediately above, measures the fuel pressure in the delivery pipe. The fuel (rail) pressure sensor converts the pressure to a voltage signal. The ECM (J623 shown above) uses this signal to control the correct fuel rail pressure and adjusts the fuel pressure regulator valve (8; N276), shown above, if the target or set-point fuel pressure calculated by the ECM and the actual pressure measured by the rail pressure sensor are different (the difference being used to derive an error signal which is used for controlling the fuel pump motor.

Figure 75

The average fuel flow is calculated by the ECM and based upon injector pulse width and fuel pressure of the fuel rail (2) shown above.

Figure 76

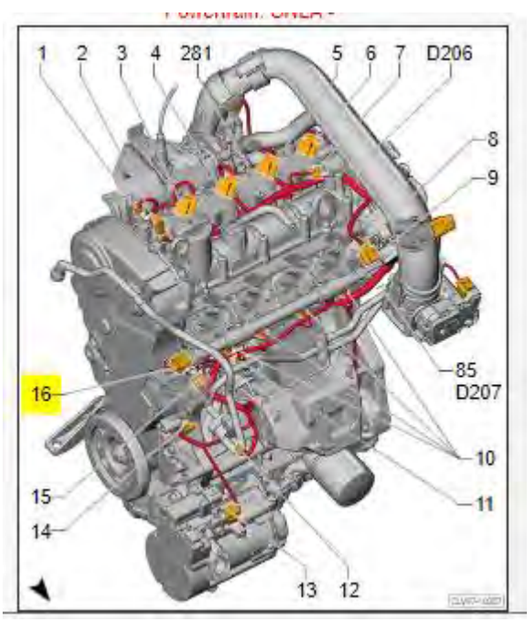

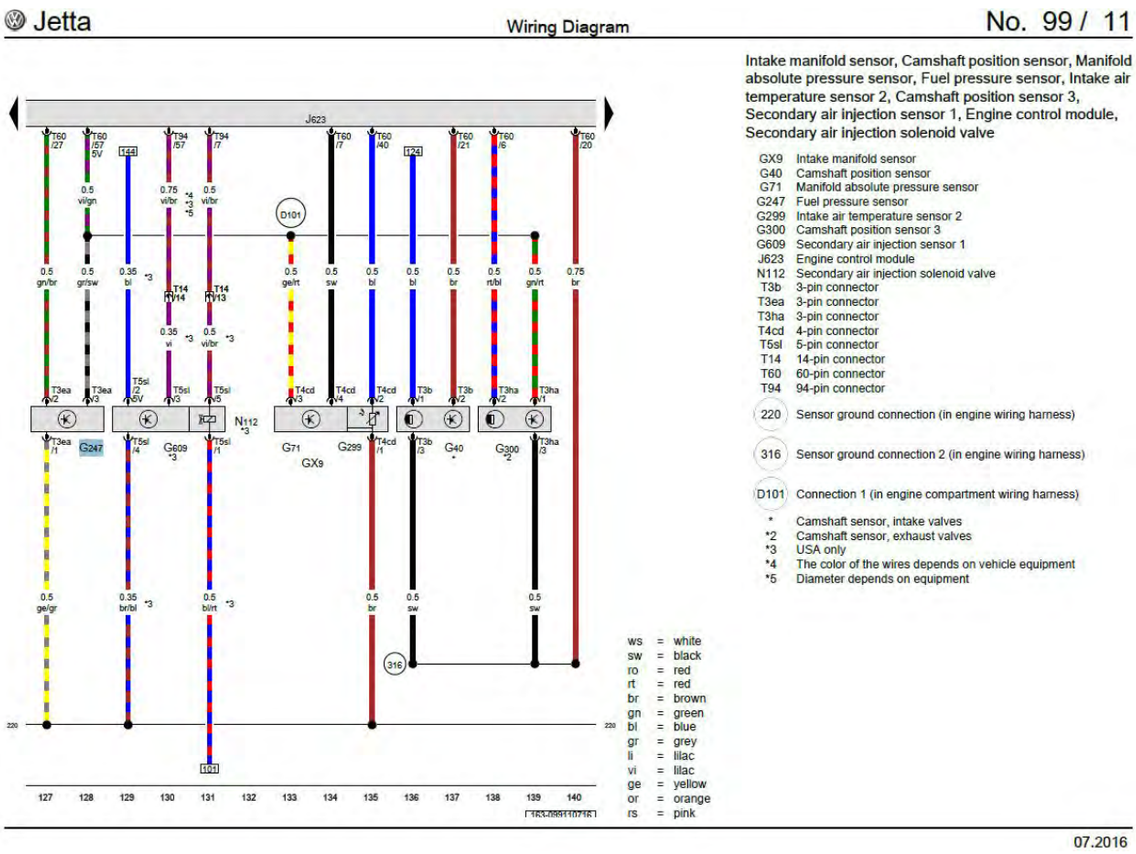

Upon information and belief, the ’574 patent Accused Instrumentalities generate a feed forward control signal via the ECM (J623) based upon the set-point fuel pressure (target pressure) and the average fuel flow (embodied in the average efficiency curve of fuel consumption). The feed forward signal is generated by the ECM/PCM software.

Figure 77

The ’574 patent Accused Instrumentalities practice a method of measuring the fuel rail pressure with a fuel rail pressure sensor pictured below (1).

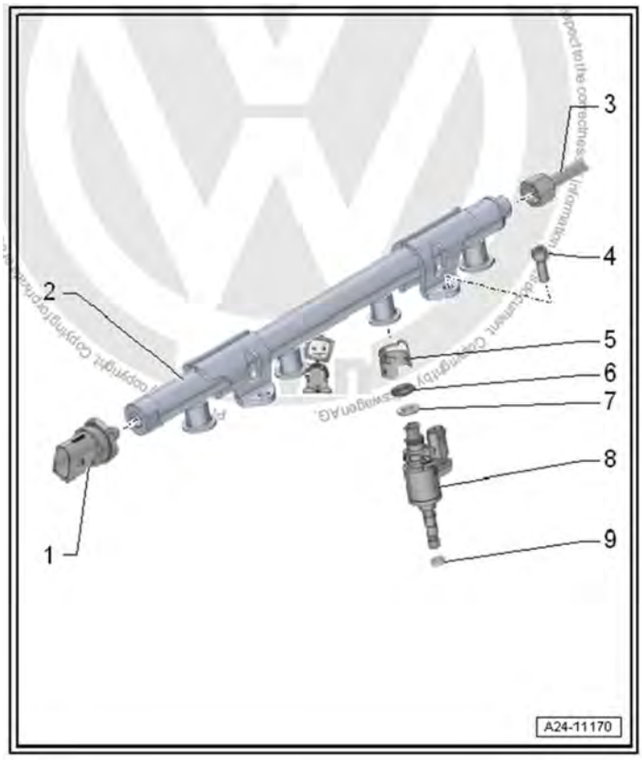

Figure 78

Upon information and belief, the ECM (J623) filters the output of the fuel rail pressure sensor (1 above); thereby it also filters out the pulses detected from the fuel rail pressure sensor to thereby filter the output of the fuel rail pressure sensor (1) in such a manner as to filter out pulses due to the opening and closing of the fuel injectors.

The ECM compares the fuel rail (actual) pressure to the set-point (target) fuel pressure and generates an error signal (Fault Code) P119A/004506 - Fuel Pressure Sensor (G247): Malfunction based upon the difference between the fuel rail pressure sensor output and the set-point fuel pressure calculated by the ECM.

Possible Causes

- Faulty Fuel Pressure Sensor (G247)
- Wiring and/or Connector(s) from/to Fuel Pressure Sensor (G247)
- Faulty HPFP
- Faulty (leaking) fuel injector

http://wiki.ross-tech.com/wiki/index.php/P119A/004506

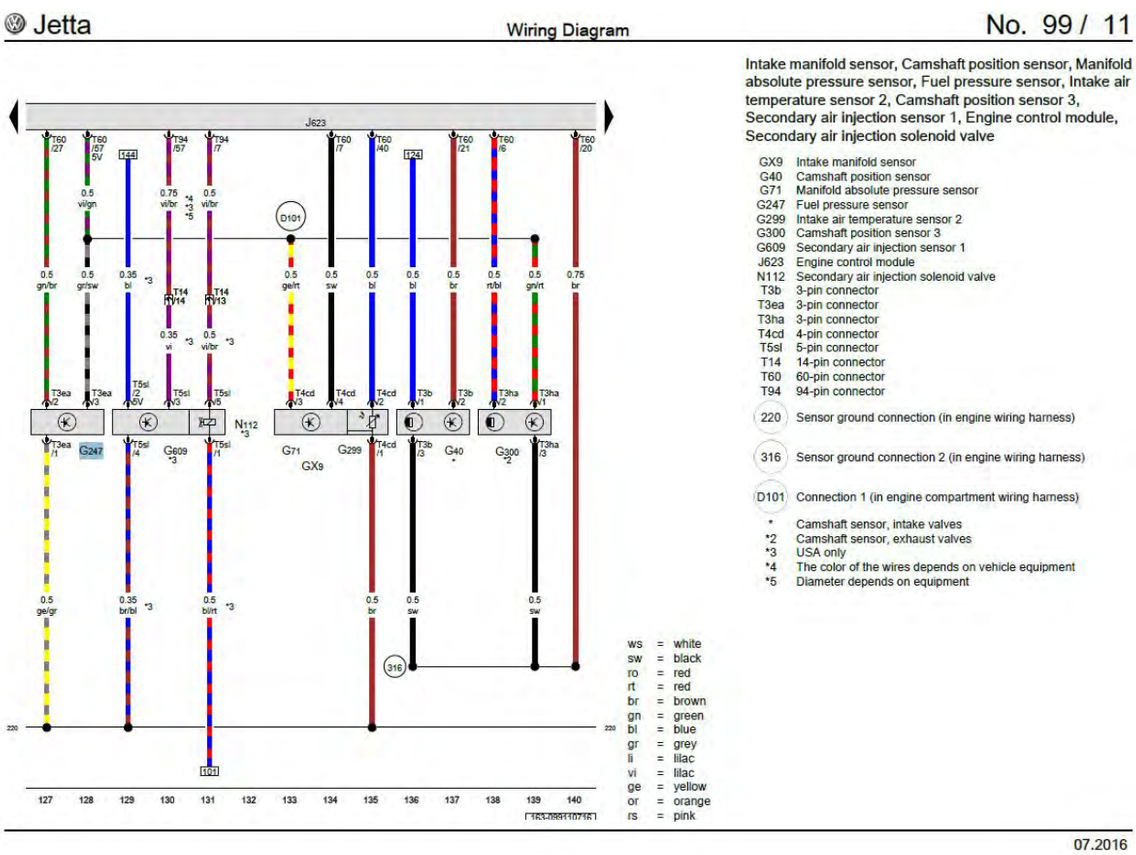

The raw output from the fuel pressure regulator valve (N276 (below)) reflects the pressure pulses of the fuel injectors, which are filtered by the ECM.

http://wiki.ross-tech.com/wiki/index.php/P119A/004506

Possible Causes

- Faulty Fuel Pressure Sensor (G247)
- Wiring and/or Connector(s) from/to Fuel Pressure Sensor (G247)
- Faulty HPFP
- Faulty (leaking) fuel injector

http://wiki.ross-tech.com/wiki/index.php/P119A/004506

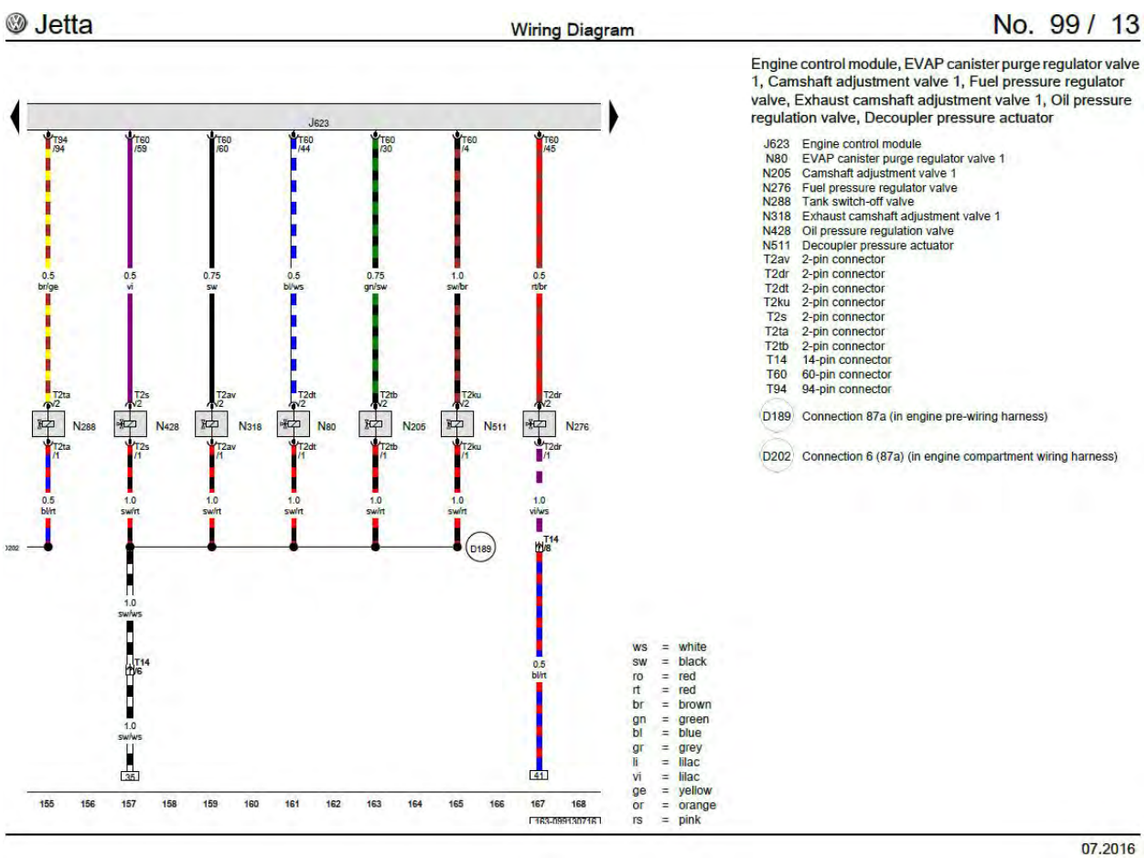

Figure 79

Ross-Tech

Diagnostic Software for European Automobiles

Ross-Tech, LLC
881 Sumneytown Pike
Lansdale PA 19446, USA
Tel: +1 267 638 2300
Fax: +1 215 893 3816

Shop Info F.A.Q. Download/Update Manual Upgrades Literature Search: Search Go

P119A/004506

Contents [hide]

1 P119A/004506 - Fuel Pressure Sensor (G247) : Malfunction
1.1 Possible Symptoms
1.2 Possible Causes
1.3 Possible Solutions
1.4 Special Notes

Categories
- Main Page
- Diagnostic Procedures
- Common Procedures
- Fault Codes
- Retrofitting
- Immobilizer

Meta
- Log in

P119A/004506 - Fuel Pressure Sensor (G247) : Malfunction

Possible Symptoms
- Malfunction Indicator Light (MIL) active
- Reduced fuel economy and engine performance

Possible Causes
- Faulty Fuel Pressure Sensor (G247)
- Wiring and/or Connector(s) from/to Fuel Pressure Sensor (G247)
- Faulty HPFP
- Faulty (leaking) fuel injector

Possible Solutions
- Replace Fuel Pressure Sensor (G247)
- Check Wiring and/or Connector(s) from/to Fuel Pressure Sensor (G247)
- Replace HPFP
- Check fuel injectors for leak-down

Special Notes
- The Fuel Pressure Regulator Valve (N276) or Fuel Metering valve (N290) on the HPFP can fail.
  - (N276) *Fuel Pressure Regulating Valve* resistance should be approximately 1 to 5 Ω
  - (N290) *Fuel Metering valve* resistance should be approximately 0.8 to 5 Ω
- If found with a TFSI engine and 16555/P0171/000369 - Fuel Trim; Bank 1: System Too Lean is also flagged, this could be caused by a failed rear main seal.
  - TFSI - Oil leak - TFSI - Oil leak - Not a VCDS related question? or is it?

Category: Fault Codes

Unless otherwise noted, all content on this site is Copyright © 2000-2010 by Ross-Tech LLC. All rights reserved
"VCDS" is a Registered Trademark of Ross-Tech, LLC.
Ross-Tech is not affiliated with the Volkswagen Group in any way.

http://wiki.ross-tech.com/wiki/index.php/P119A/004506

Figure 80

As demonstrated in the exemplary images below, the ’574 patent Accused Instrumentalities modify a feed forward control signal via the ECM (J623) and /or CAN Bus when the fuel (rail) pressure sensor (G247) detects a fuel pressure different from the set-point fuel pressure and communicates that difference (error signal) to the ECM which in turn generates a control signal based upon that error signal to the fuel pump motor.

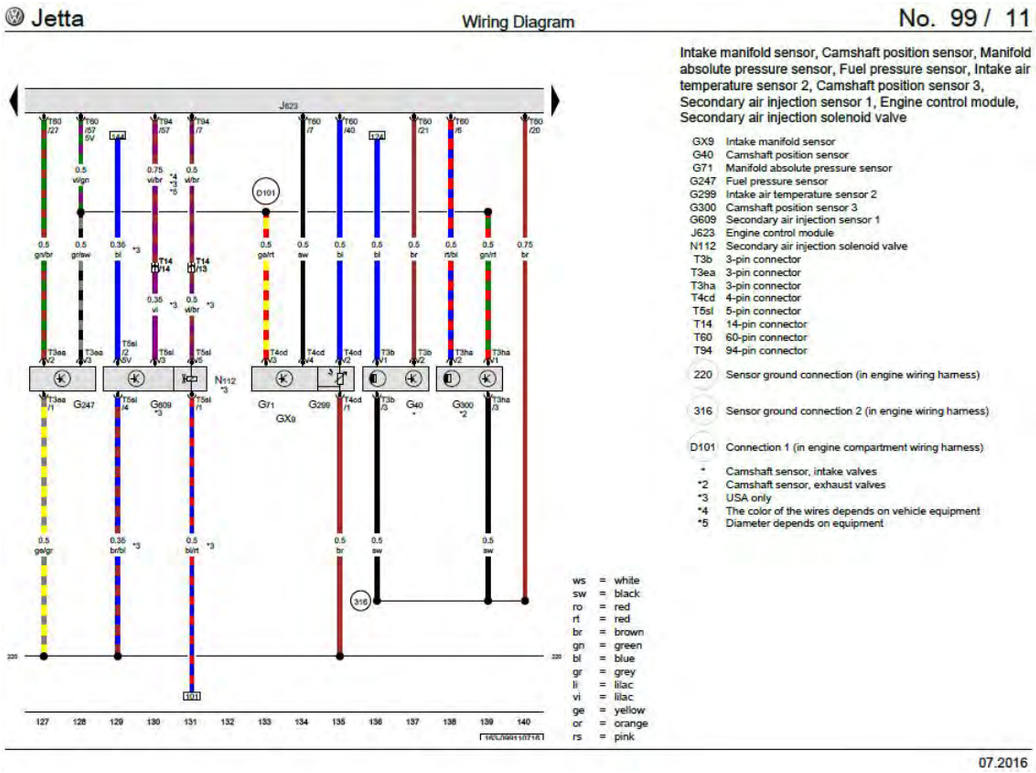

The fuel (rail) pressure sensor (2) installed on the fuel cylinder (fuel rail) and the fuel pressure regulator valve (N276) deliver the modified feed forward control signal based upon the error signal (received from the ECM (J623)) thereby generating a motor controller signal and sending the motor control signal to the fuel pump motor controlled by the fuel pump motor control module (J538). This is accomplished via the fuel delivery unit (GX1) with the fuel pump control module (J538) controlling the fuel pump (G5).

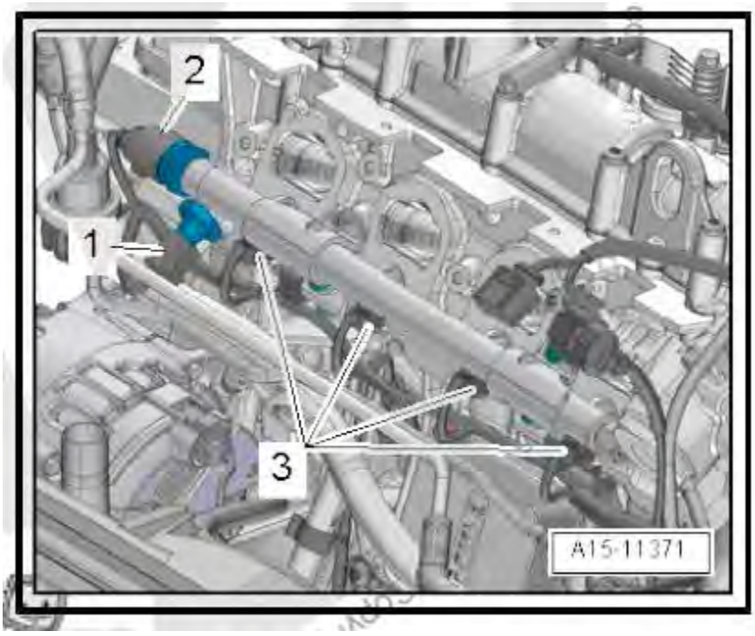

Jetta Wiring Diagram No. 99 / 13

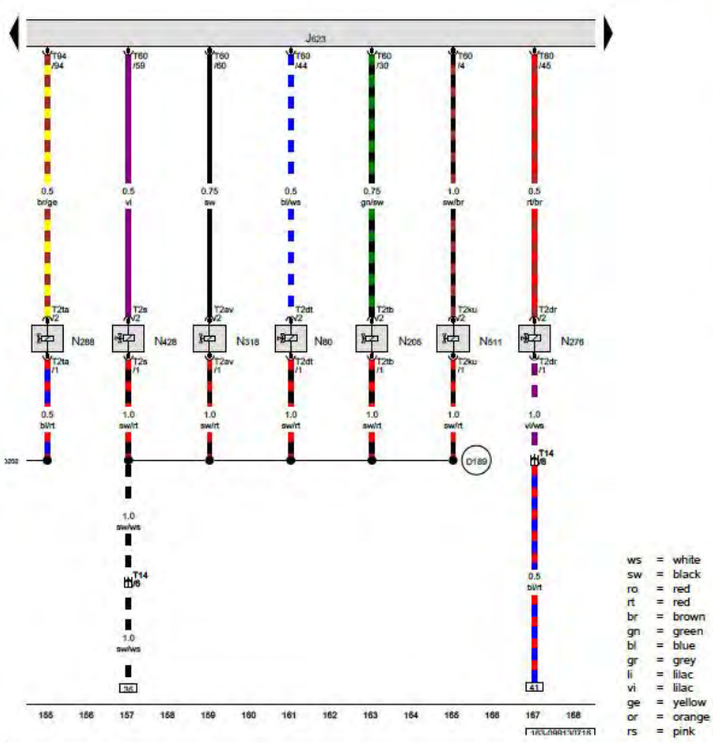

Engine control module, EVAP canister purge regulator valve 1, Camshaft adjustment valve 1, Fuel pressure regulator valve, Exhaust camshaft adjustment valve 1, Oil pressure regulation valve, Decoupler pressure actuator

J623	Engine control module
N80	EVAP canister purge regulator valve 1
N205	Camshaft adjustment valve 1
N276	Fuel pressure regulator valve
N288	Tank switch-off valve
N318	Exhaust camshaft adjustment valve 1
N428	Oil pressure regulation valve
N511	Decoupler pressure actuator
T2av	2-pin connector
T2dr	2-pin connector
T2dt	2-pin connector
T2ku	2-pin connector
T2s	2-pin connector
T2ta	2-pin connector
T2tb	2-pin connector
T14	14-pin connector
T60	60-pin connector
T94	94-pin connector
D189	Connection 87a (in engine pre-wiring harness)
D202	Connection 6 (87a) (in engine compartment wiring harness)

ws	=	white
sw	=	black
ro	=	red
rt	=	red
br	=	brown
gn	=	green
bl	=	blue
gr	=	grey
li	=	lilac
vi	=	lilac
ge	=	yellow
or	=	orange
rs	=	pink

07.2016

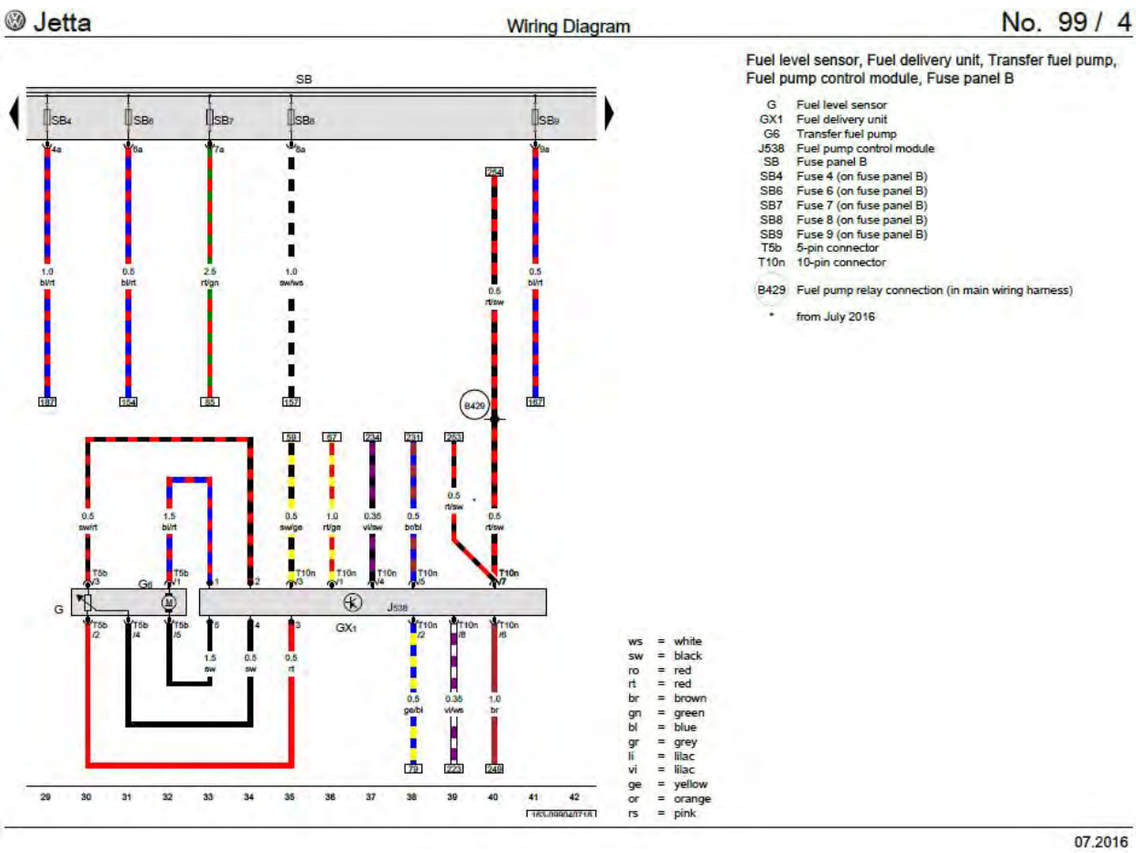

Based upon the totality of the foregoing evidence, and based further upon information and belief, the ’574 patent Accused Instrumentalities practice “a method of controlling the fuel pressure within a fuel delivery system having a fuel pump which delivers fuel to a fuel rail of an internal combustion engine comprising: providing a set-point fuel pressure; providing the estimated average fuel flow through the system; generating a feed forward control signal based upon the set-point fuel pressure and the average fuel flow; measuring the fuel rail pressure with a fuel pressure sensor; filtering the output of the fuel pressure sensor to filter out pulses due to the opening and closing of the fuel injectors; comparing the fuel rail pressure to the set-point fuel pressure and generating an error signal based upon the difference between the fuel rail pressure and the set-point fuel pressure; and modifying the feed forward control signal based upon the error signal thereby generating a motor controller signal and sending the motor control signal to the fuel pump motor.”

Figure 81

93. Claim 7 of the ’574 patent recites a fuel delivery system comprising: a fuel rail adapted to deliver fuel to fuel injectors of an automotive vehicle, a fuel pump adapted to deliver fuel to said fuel rail, a fuel pressure sensor adapted to measure the fuel rail pressure, a low-pass filter adapted to filter the output of said fuel pressure sensor to filter out pulses due to the opening and closing of the fuel injectors, and a fuel pump motor controller having: a feed

forward controller adapted to provide a feed forward signal having fuel pump motor control parameters based upon a set-point fuel pressure and the average fuel flow through said system; a first summing junction adapted to compare the fuel rail pressure to the set-point fuel pressure and to generate an error value based upon the difference between the fuel rail pressure and the set-point fuel pressure; a feed back controller adapted to receive the error value and to generate a feed back control signal; a second summing junction adapted to receive the feed back control signal from said feed back controller and the feed forward control signal from the feed forward controller and to modify the fuel pump motor control parameters of the feed forward control signal based upon the feed back control signal to generate a motor controller signal; and a fuel pump motor controller driver adapted to receive the motor controller signal and to control the speed of said fuel pump based upon the motor controller signal.

94. On information and belief, the ’574 patent Accused Instrumentalities infringe claim 7 of the ’574 patent. The ’574 patent Accused Instrumentalities comprise a fuel delivery system (*Figure 82*) comprising: a fuel rail adapted to deliver fuel to fuel injectors of an automotive vehicle (*Figure 83*), a fuel pump adapted to deliver fuel to said fuel rail, a fuel pressure sensor adapted to measure the fuel rail pressure (*Figures 84-85*), a low-pass filter adapted to filter the output of said fuel pressure sensor to filter out pulses due to the opening and closing of the fuel injectors (*Figure 86*), and a fuel pump motor controller (*Figure 87*) having: a feed forward controller adapted to provide a feed forward signal having fuel pump motor control parameters based upon a set-point fuel pressure and the average fuel flow through said system (*Figure 88*); a first summing junction adapted to compare the fuel rail pressure to the set-point fuel pressure and to generate an error value based upon the difference between the fuel rail pressure and the set-point fuel pressure (*Figure 89*); a feed back controller adapted to receive the error value and to generate a feed back control signal (*Figure 90*); a second summing junction

adapted to receive the feed back control signal from said feed back controller and the feed forward control signal from the feed forward controller and to modify the fuel pump motor control parameters of the feed forward control signal based upon the feed back control signal to generate a motor controller signal (*Figure 91*); and a fuel pump motor controller driver adapted to receive the motor controller signal and to control the speed of said fuel pump based upon the motor controller signal (*Figure 92*).

The ’574 patent Accused Instrumentalities comprise a fuel delivery system.

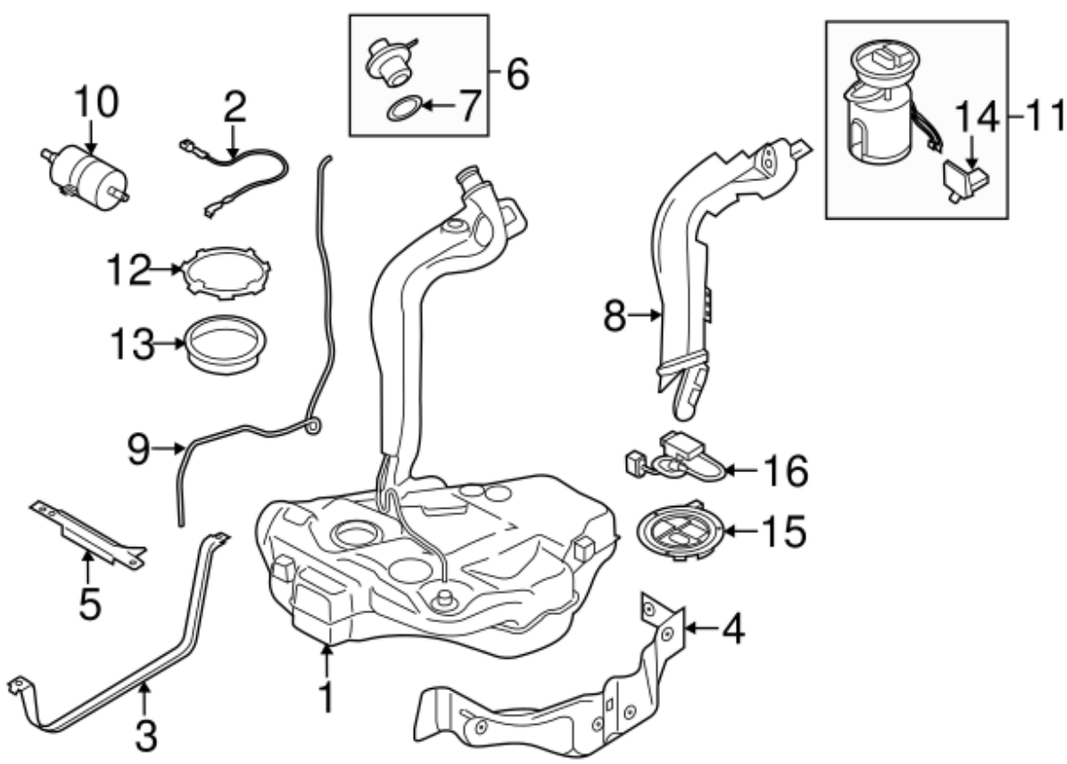

Figure 82

The ’574 patent Accused Instrumentalities comprise a fuel delivery pipe (rail) adapted to deliver fuel to fuel injectors (8) of an automotive vehicle. *See below*.

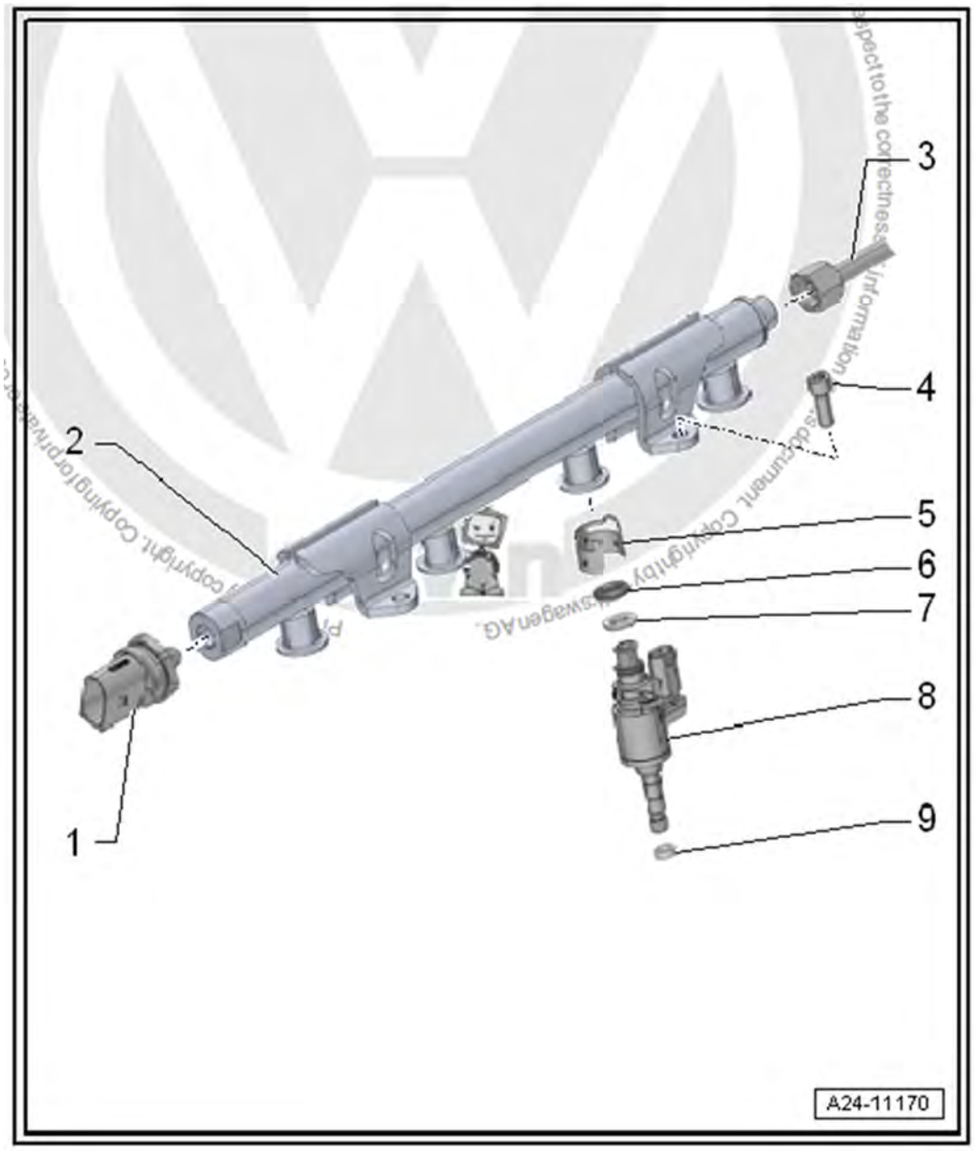

Figure 83

The ’574 patent Accused Instrumentalities comprise a fuel pump (8) adapted to deliver fuel to said fuel rail (2). *See below*.

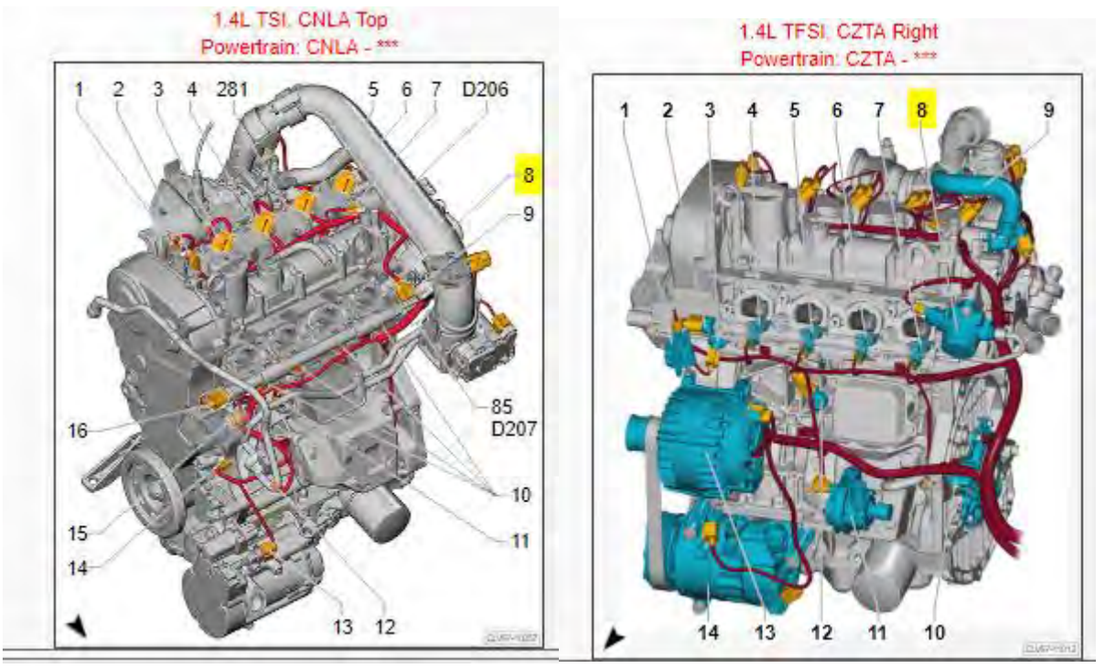

Figure 84

The ’574 patent Accused Instrumentalities comprise a fuel pressure sensor (1; G247) adapted to measure the fuel rail pressure. *See below*.

Jetta Wiring Diagram No. 99 / 11

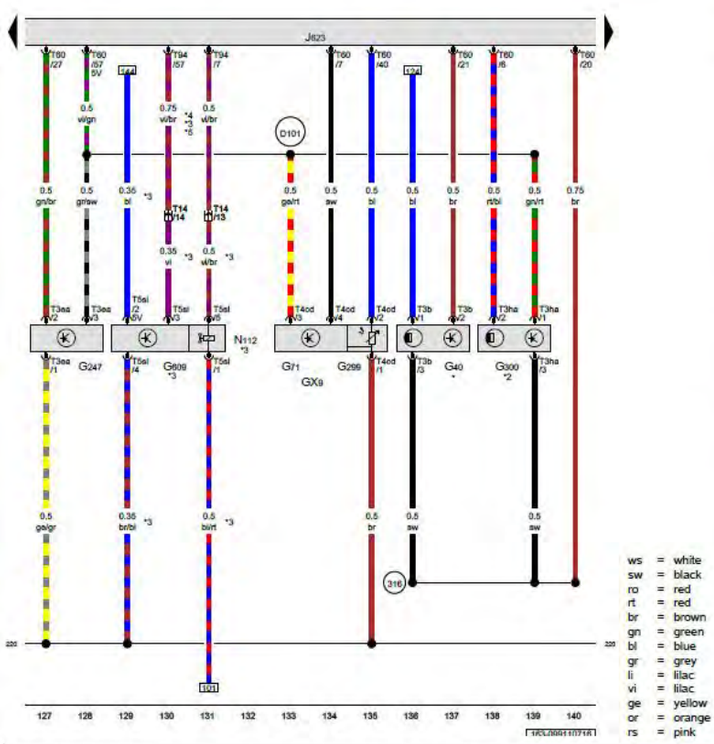

Intake manifold sensor, Camshaft position sensor, Manifold absolute pressure sensor, Fuel pressure sensor, Intake air temperature sensor 2, Camshaft position sensor 3, Secondary air injection sensor 1, Engine control module, Secondary air injection solenoid valve

GX9	Intake manifold sensor
G40	Camshaft position sensor
G71	Manifold absolute pressure sensor
G247	Fuel pressure sensor
G299	Intake air temperature sensor 2
G300	Camshaft position sensor 3
G609	Secondary air injection sensor 1
J623	Engine control module
N112	Secondary air injection solenoid valve
T3b	3-pin connector
T3ea	3-pin connector
T3ha	3-pin connector
T4cd	4-pin connector
T5sl	5-pin connector
T14	14-pin connector
T60	60-pin connector
T94	94-pin connector
220	Sensor ground connection (in engine wiring harness)
316	Sensor ground connection 2 (in engine wiring harness)
D101	Connection 1 (in engine compartment wiring harness)
*	Camshaft sensor, intake valves
*2	Camshaft sensor, exhaust valves
*3	USA only
*4	The color of the wires depends on vehicle equipment
*5	Diameter depends on equipment

ws	=	white
sw	=	black
ro	=	red
rt	=	red
br	=	brown
gn	=	green
bl	=	blue
gr	=	grey
li	=	lilac
vi	=	lilac
ge	=	yellow
or	=	orange
rs	=	pink

07.2016

Figure 85

The ’574 patent Accused Instrumentalities comprise a low-pass filter adapted to filter the output of said fuel pressure sensor to filter out pulses due to the opening and closing of the fuel injectors.

Upon information and belief, the ECM (J623) filters the output of the fuel rail pressure sensor (1 below); thereby it also filters out the pulses detected from the fuel rail pressure sensor to thereby filter the output of the fuel rail pressure sensor (1) in such a manner as to filter out pulses due to the opening and closing of the fuel injectors.

Figure 86

The ’574 patent Accused Instrumentalities comprise a fuel pump motor controller (J538). *See below*.

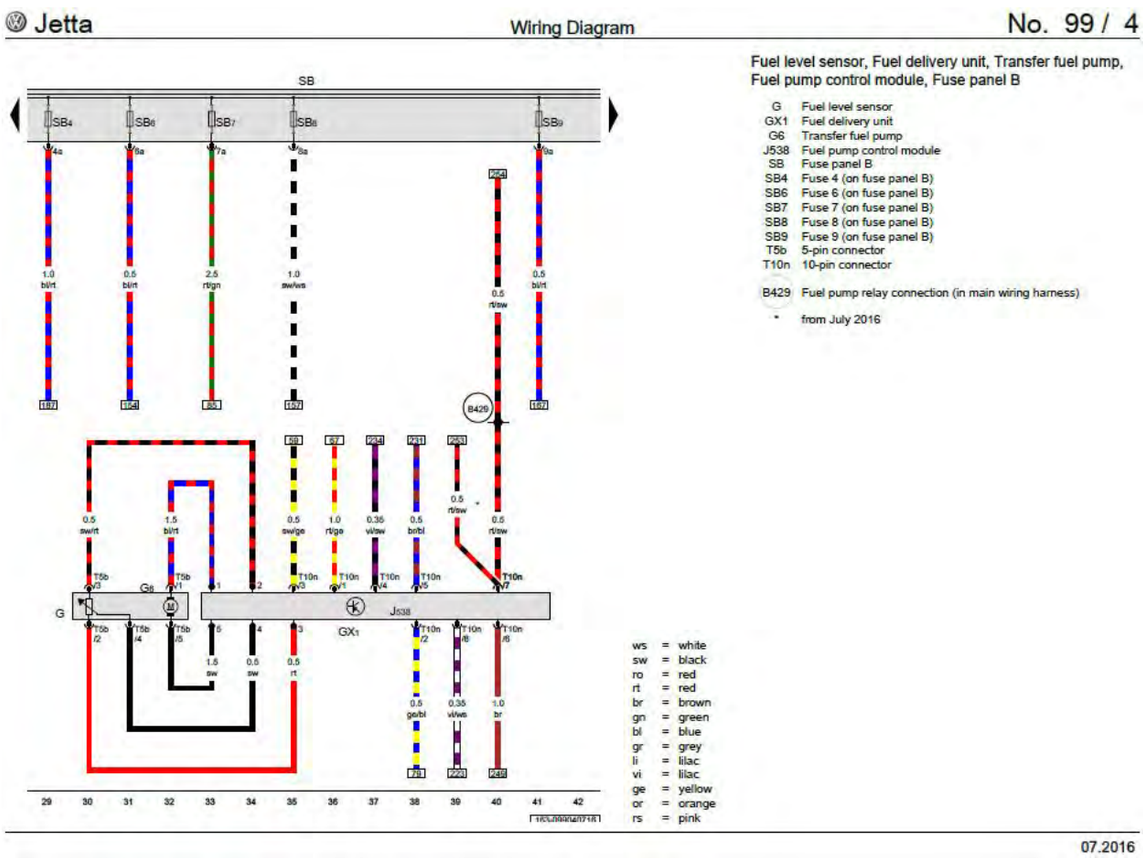

Figure 87

The ’574 patent Accused Instrumentalities comprise a feed forward controller adapted to provide a feed forward signal having fuel pump motor control parameters based upon a set-point fuel pressure and the average fuel flow through said system.

For example, the Engine Control Module (J623) and Fuel pump control module (J538) are feed forward controllers adapted to provide a feed forward signal having fuel pump motor control parameters based upon a set-point fuel pressure and the aver fuel flow through said system. *See below*.

For example, the Fuel gauge sending unit (14) shown immediately below, sends fuel data to the ECM, which calculates the estimated average fuel flow through the system.

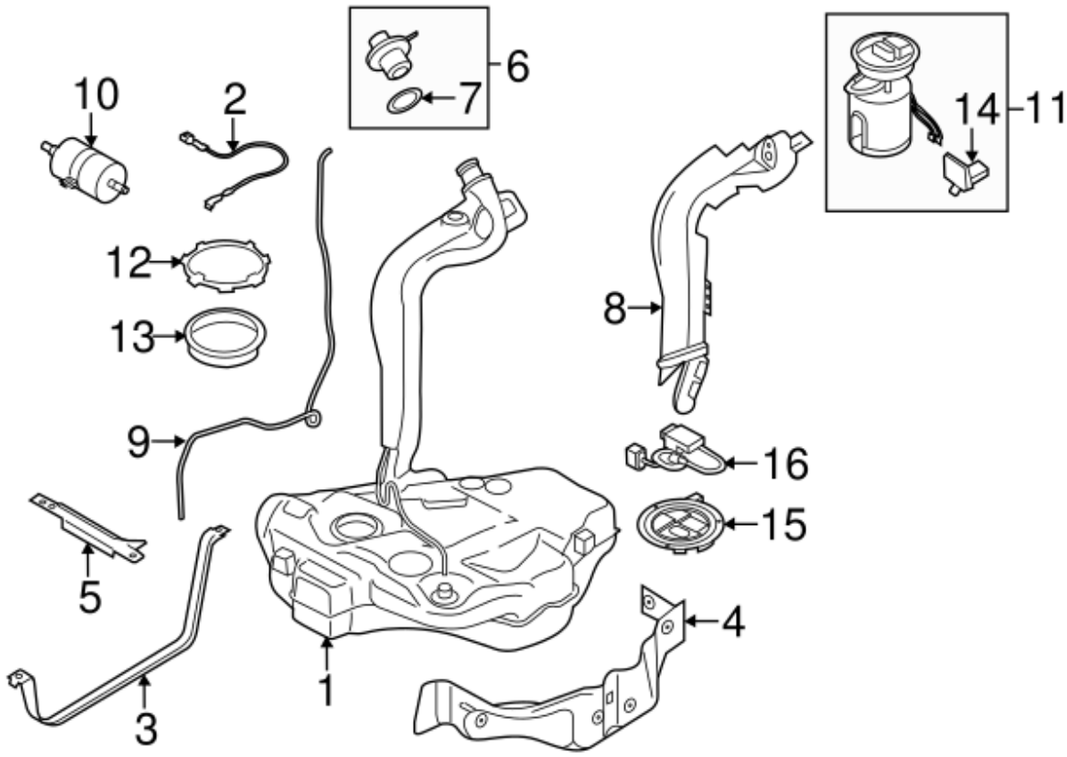
10
2
6
7
14
11
12
13
8
9
16
15
5
4
1
3

Jetta Wiring Diagram No. 99 / 11

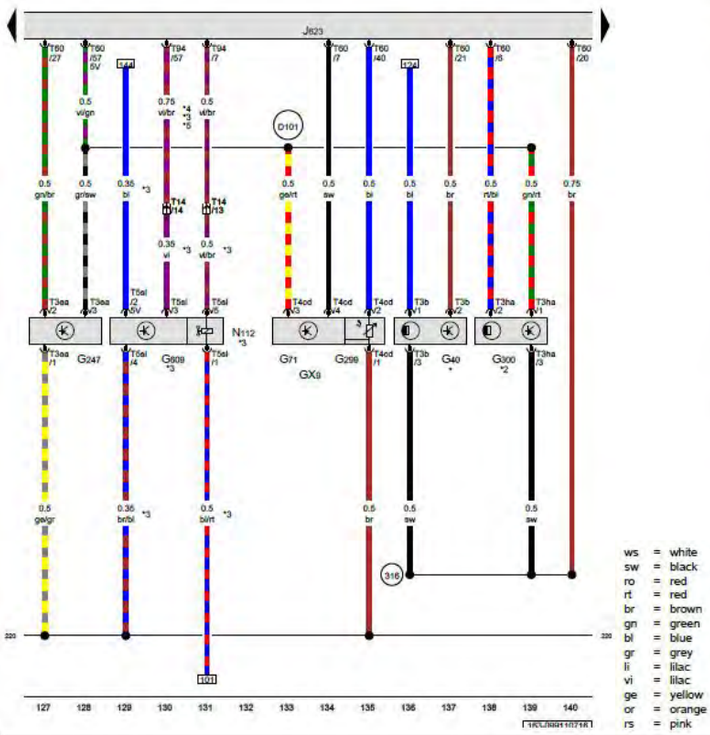

Intake manifold sensor, Camshaft position sensor, Manifold absolute pressure sensor, Fuel pressure sensor, Intake air temperature sensor 2, Camshaft position sensor 3, Secondary air injection sensor 1, Engine control module, Secondary air injection solenoid valve

GX9	Intake manifold sensor
G40	Camshaft position sensor
G71	Manifold absolute pressure sensor
G247	Fuel pressure sensor
G299	Intake air temperature sensor 2
G300	Camshaft position sensor 3
G609	Secondary air injection sensor 1
J623	Engine control module
N112	Secondary air injection solenoid valve
T3b	3-pin connector
T3ea	3-pin connector
T3ha	3-pin connector
T4cd	4-pin connector
T5sl	5-pin connector
T14	14-pin connector
T60	60-pin connector
T94	94-pin connector
220	Sensor ground connection (in engine wiring harness)
316	Sensor ground connection 2 (in engine wiring harness)
D101	Connection 1 (in engine compartment wiring harness)
*	Camshaft sensor, intake valves
*2	Camshaft sensor, exhaust valves
*3	USA only
*4	The color of the wires depends on vehicle equipment
*5	Diameter depends on equipment

07.2016

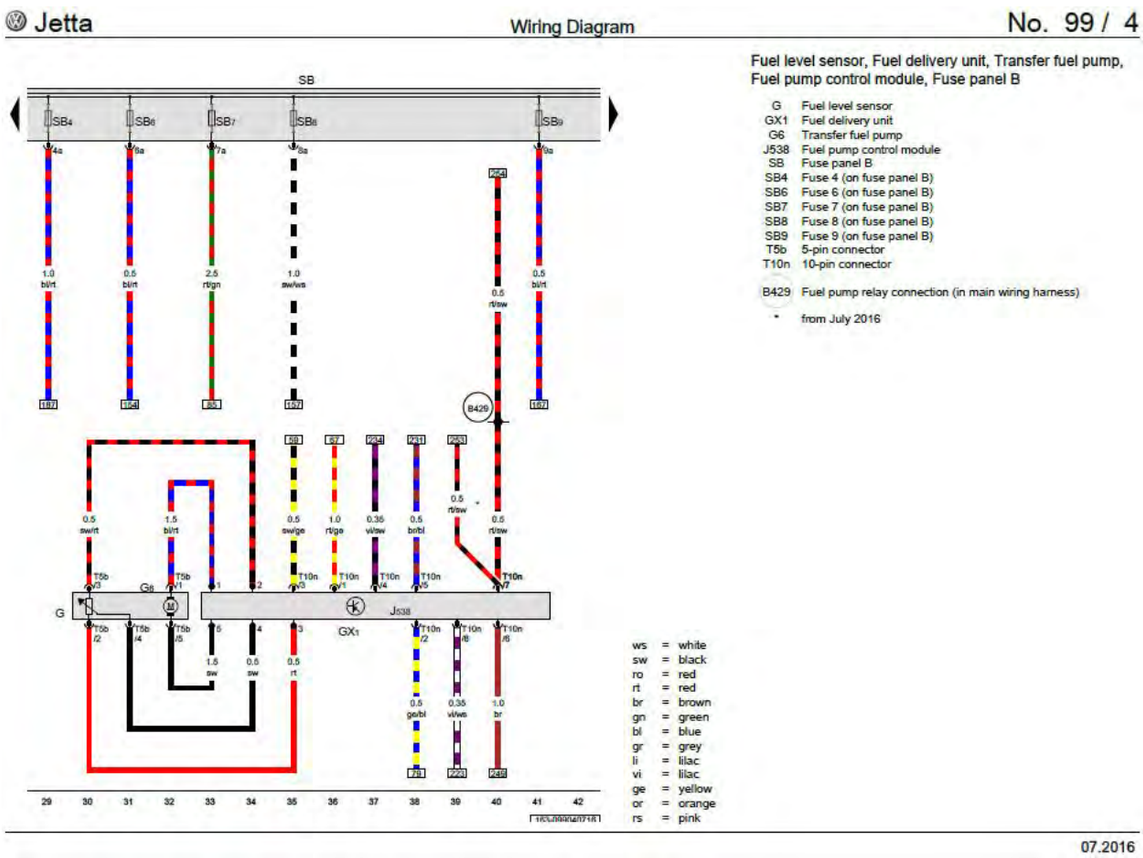

Figure 88

The ’574 patent Accused Instrumentalities comprise a first summing junction adapted to compare the fuel rail pressure to the set-point fuel pressure and to generate an error value based upon the difference between the fuel rail pressure and the set-point fuel pressure.

As shown immediately below, the fuel (rail) pressure sensor (1) generates a signal corresponding to the fuel rail pressure. The fuel rail pressure generated by the fuel (rail) pressure sensor is compared to the set point fuel (rail) pressure (calculated and generated by the ECM). When the fuel rail pressure and the set-point fuel pressure differ, an error value is generated based upon the difference.

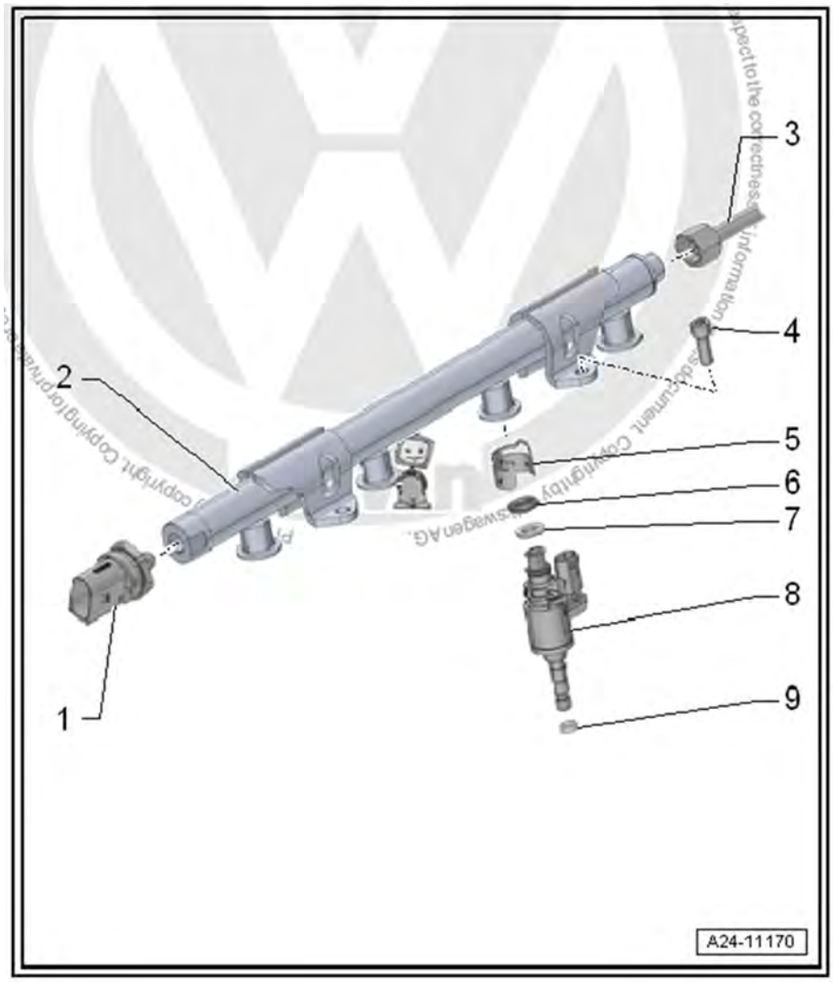

Figure 89

The ’574 patent Accused Instrumentalities comprise a feed back controller adapted to receive the error value and to generate a feed back control signal.

For example, the ECM (J623) is a feed back controller) adapted to receive the error value and generate a feed back control signal.

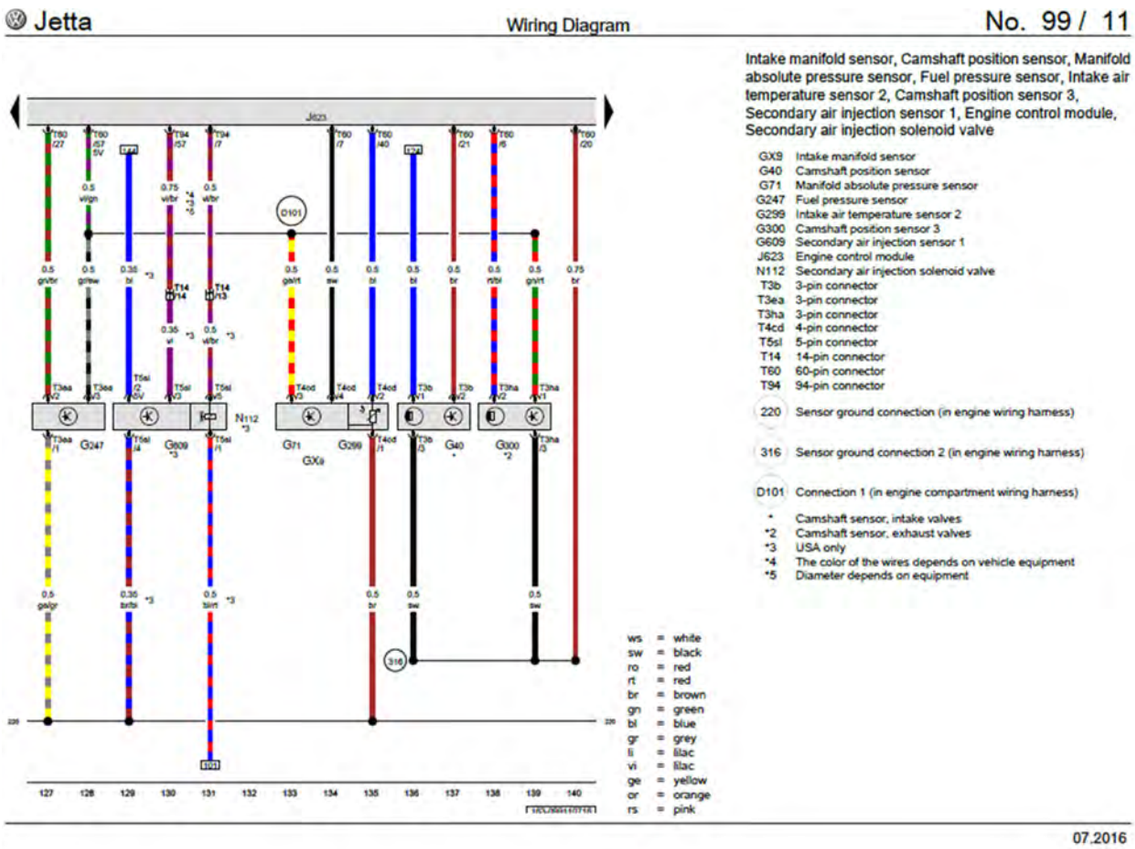

Figure 90

The ’574 patent Accused Instrumentalities comprise a second summing junction adapted to receive the feed back control signal from said feed back controller and the feed forward control signal from the feed forward controller and to modify the fuel pump motor control parameters of the feed forward control signal based upon the feed back control signal to generate a motor controller signal.

For example, the ECM (J623) shown below is a feed back controller and a feed forward controller.

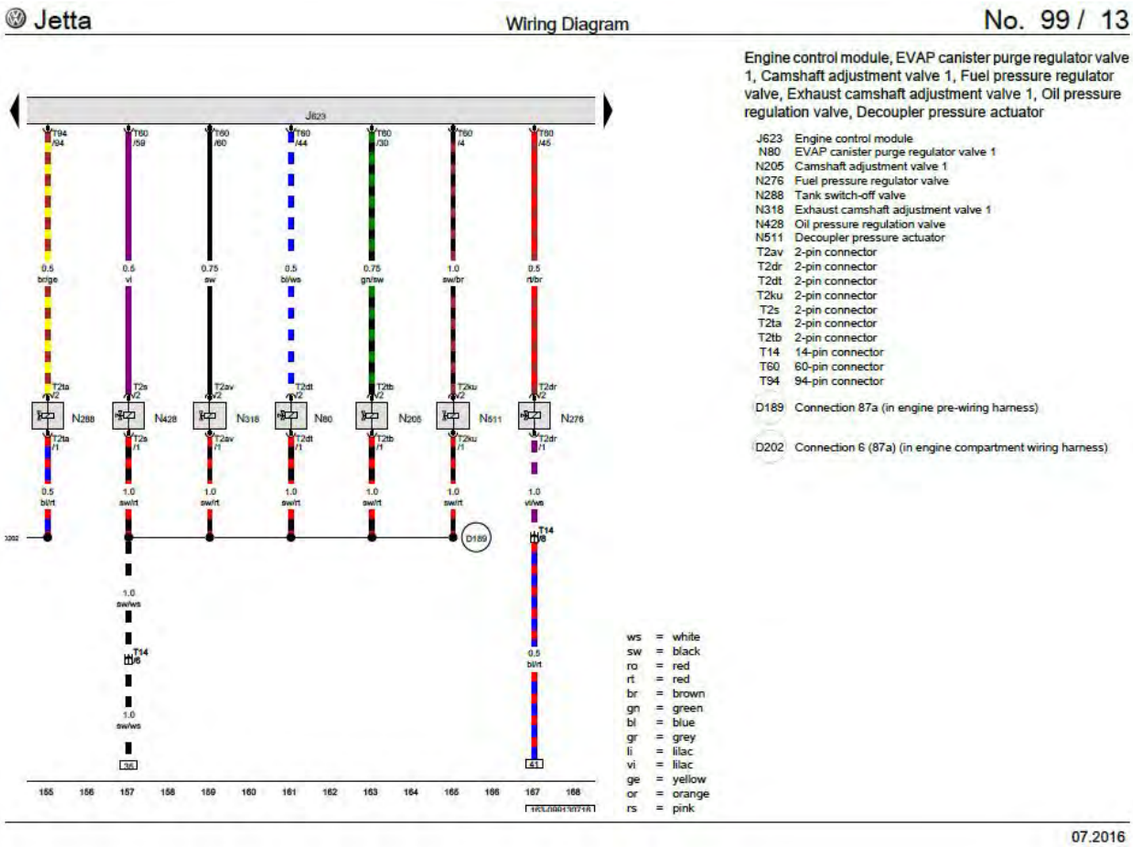

For example, as shown below, the fuel pump control module (J538) is a feed forward controller and a feed back controller which modifies the fuel pump motor control parameters of the feed forward control signal based upon the feed back control signal to generate a motor controller signal.

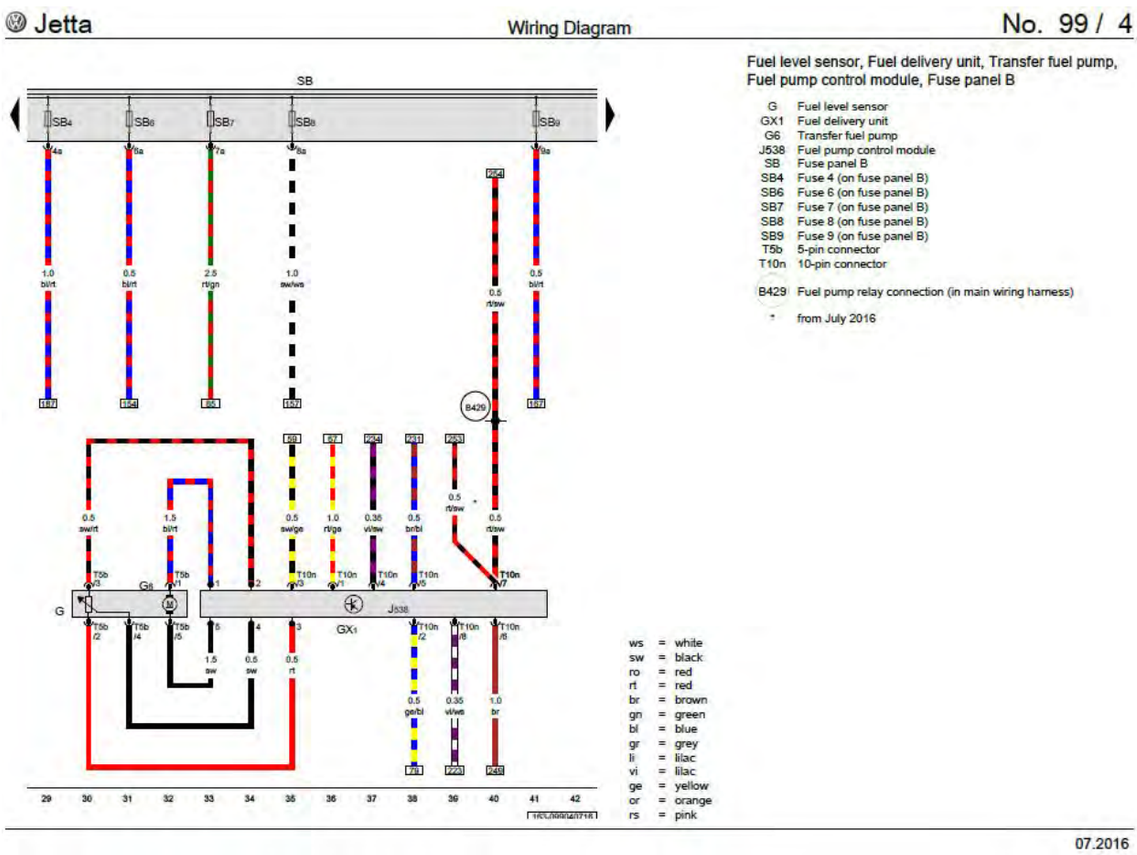

The fuel (rail) pressure sensor (2) installed on the fuel cylinder (fuel rail) and the fuel pressure regulator valve (N276) deliver the modified feed forward control signal based upon the error signal (received from the ECM (J623)) thereby generating a motor controller signal and sending the motor control signal to the fuel pump motor controlled by the fuel pump motor control module (J538). This is accomplished via the fuel delivery unit (GX1) with the fuel pump (G6) with the fuel pump control module (J538).

Figure 91

he ’574 patent Accused Instrumentalities comprise a fuel pump motor controller driver adapted to receive the motor controller signal and to control the speed of said fuel pump based upon the motor controller signal.

For example, the fuel pump motor controller (J538) (shown below) driver is adapted to receive the motor controller signal (from the ECM (J623) shown above) and to control the speed of said fuel pump based on the motor control signal.

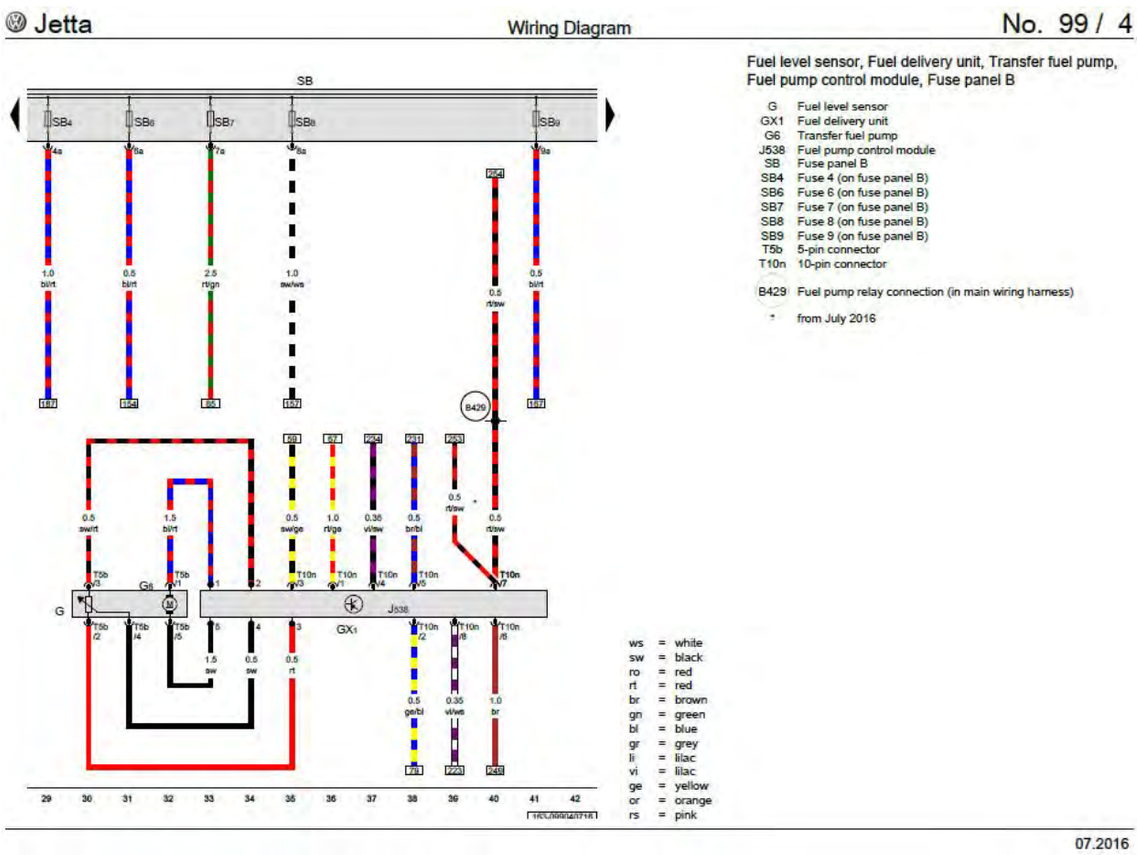

Based upon the totality of the foregoing evidence, and based further upon information and belief, the ’574 patent Accused Instrumentalities include a fuel delivery system comprising: a fuel rail adapted to deliver fuel to fuel injectors of an automotive vehicle, a fuel pump adapted to deliver fuel to said fuel rail, a fuel pressure sensor adapted to measure the fuel rail pressure, a low-pass filter adapted to filter the output of said fuel pressure sensor to filter out pulses due to the opening and closing of the fuel injectors, and a fuel pump motor controller having: a feed forward controller adapted to provide a feed forward signal having fuel pump motor control parameters based upon a set-point fuel pressure and the average fuel flow through said system; a first summing junction adapted to compare the fuel rail pressure to the set-point fuel pressure and to generate an error value based upon the difference between the fuel rail pressure and the set-point fuel pressure; a feed back controller adapted to receive the error value and to generate a feed back control signal; a second summing junction adapted to receive the feed back control signal from said feed back controller and the feed forward control signal from the feed forward controller and to modify the fuel pump motor control parameters of the feed forward control signal based upon the feed back control signal to generate a motor controller signal; and a fuel pump motor controller driver adapted to receive the motor controller signal and to control the speed of said fuel pump based upon the motor controller signal.

Figure 92

COUNT XIII – INFRINGEMENT OF U.S. PATENT NO. 6,609,497

95. The allegations set forth in the foregoing paragraphs 1 through 94 are incorporated into this Thirteenth Claim for Relief.

96. On August 26, 2003, U.S. Patent No. 6,609,497 ("the '497 patent"), entitled "Method for Determining MBT Timing in an Internal Combustion Engine," was duly and legally issued by the United States Patent and Trademark Office. A true and correct copy of the '497 patent is attached as Exhibit 13.

97. Plaintiff is the assignee and owner of the right, title and interest in and to the '497 patent, including the right to assert all causes of action arising under said patents and the right to any remedies for infringement of them.

98. Upon information and belief, Defendants have directly infringed at least claim 1 of the '497 patent by making, using, selling, importing and/or providing and causing to be used the 2012-2018 Tiguan, 2012-2018 Audi A3, 2012-2018 Audi A4, 2012-2018 Audi A5, 2012-2018 Audi A6, 2016-2018 Audi TT, 2015-2018 Audi S3, 2015-2018 VW Golf, 2012-2018 VW Golf GTI, 2015-2018 VW Golf R, 2015-2018 Golf Sportwagon, 2013-2018 Jetta GLI, 2014-2018 VW Jetta Sedan, 2014-2018 VW Passat, 2012-2017 WV CC, 2012-2018 VW Beetle, 2018 VW Atlas, 2015- 2018 Audi Q3, 2012-2018 Audi Q5, and 2017-2018 Porsche Macan with the EA888 engines (the "'497 patent Accused Instrumentalities").

99. In particular, claim 1 of the '497 patent recites a method of controlling an internal combustion engine, said engine having at least one cylinder, said method comprising the steps of: measuring the combustion pressure in said at least one cylinder at at least two discrete times during a combustion cycle; calculating a net combustion pressure change in said at least one cylinder based on said measured combustion pressures; calculating the second derivative of said net combustion pressure change; calculating the maximum acceleration point of said net

combustion pressure change from said second derivative of said net combustion pressure change; and varying the spark timing of said engine until said maximum acceleration point is aligned with top dead center to achieve maximum braking torque spark timing.

100. On information and belief, the ’497 patent Accused Instrumentalities infringe claim 1 of the ’497 patent. The ’497 patent Accused Instrumentalities practice a method of controlling an internal combustion engine (*Figure 93*), said engine having at least one cylinder (*Figure 93*), said method comprising the steps of: measuring the combustion pressure in said at least one cylinder at at least two discrete times during a combustion cycle (*Figure 94*); calculating a net combustion pressure change in said at least one cylinder based on said measured combustion pressures (*Figure 95*) calculating the second derivative of said net combustion pressure change *(Figure 96*); calculating the maximum acceleration point of said net combustion pressure change from said second derivative of said net combustion pressure change (*Figure 97*); and varying the spark timing of said engine until said maximum acceleration point is aligned with top dead center to achieve maximum braking torque spark timing (*Figure 98*).

eSelf-Study Program 920243

The Audi 1.8L and 2.0L Third Generation EA888 Engines

Audi Academy

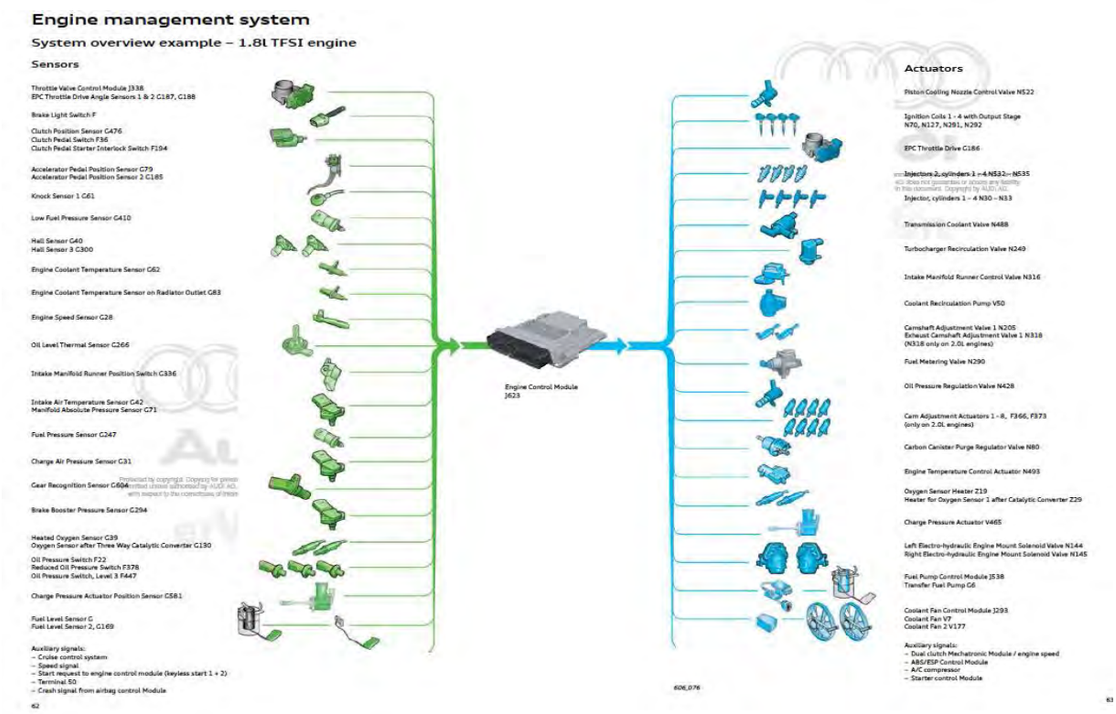

As shown above, the Engine Management System including the Engine Control Module (ECM; J623) controls the Audi 1.8L and 2.0L Third Generation EA888 Engines (internal combustion engine). The ’497 patent Accused Instrumentalities comprise the Audi 1.8L and 2.0L Third Generation EA888 Engines.

Figure 93

The ’497 patent Accused Instrumentalities comprise a method of controlling an internal combustion engine, said engine having at least one cylinder, wherein said method comprises measuring the combustion pressure in said at least one cylinder at least at two discrete times during a combustion cycle. As shown below, DTC P03AF, Cylinder 3 Pressure Too High, utilizes the Knock Control Function to detect Knock Activity (cylinder pressure) at two discrete times during a combustion cycle; it detects (measures) knock in both the main knock window and the pre-knock window (two discrete times).

As shown below, the engine control system comprises the knock sensor. The PCM calculates cylinder combustion pressure as derived from the knock sensor input.

Engine Management

- Electronic engine management system with EPC
- Combined direct and port injection systems*
- Adaptive O_2 sensor control
- Mapped ignition with high voltage ignition coils
- Cylinder-selective adaptive knock control

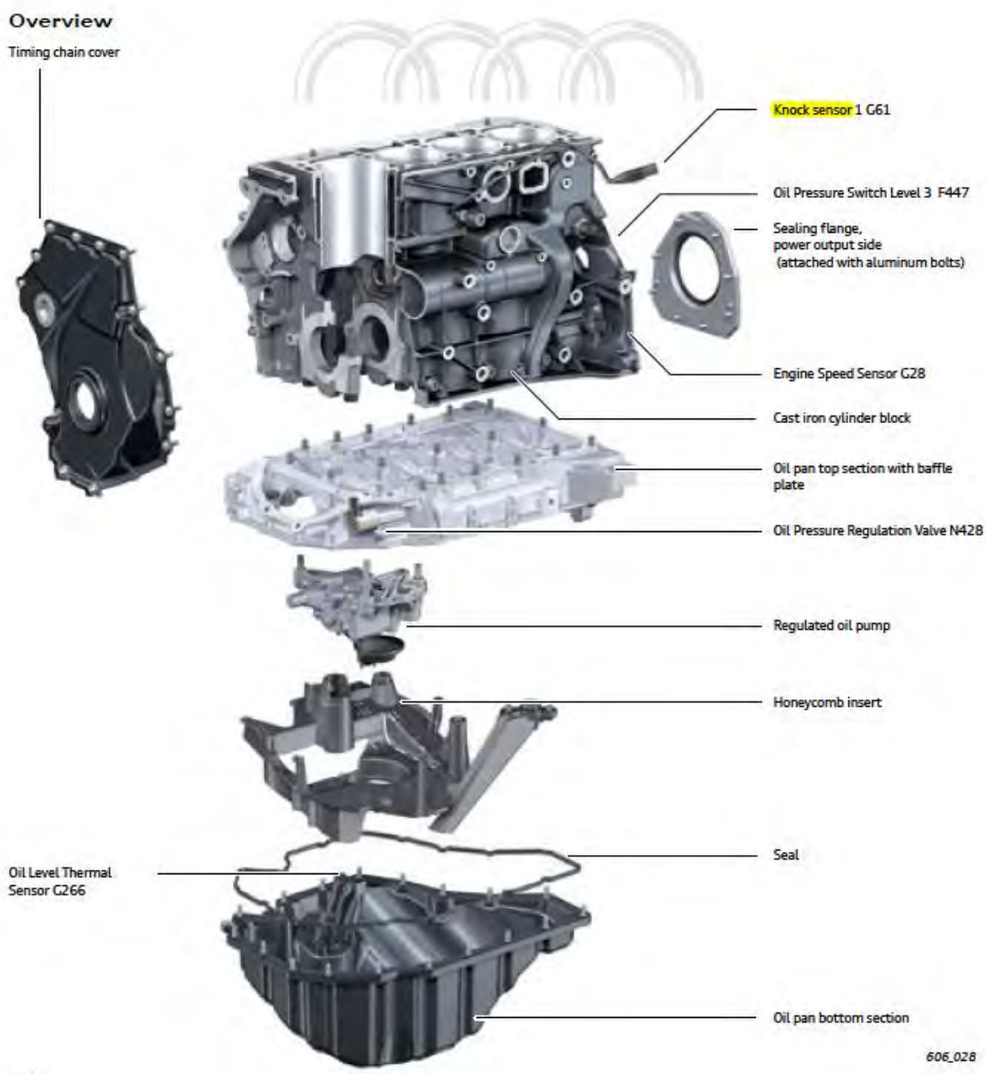
Overview
Timing chain cover
Knock sensor 1 G61
Oil Pressure Switch Level 3 F447
Sealing flange,
power output side
(attached with aluminum bolts)
Engine Speed Sensor G28
Cast iron cylinder block
Oil pan top section with baffle plate
Oil Pressure Regulation Valve N428
Regulated oil pump
Honeycomb insert
Seal
Oil Level Thermal Sensor G266
Oil pan bottom section
606_028

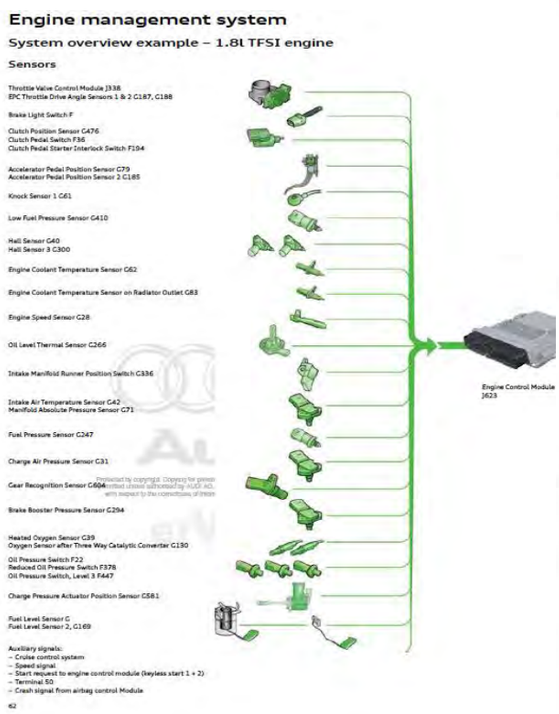

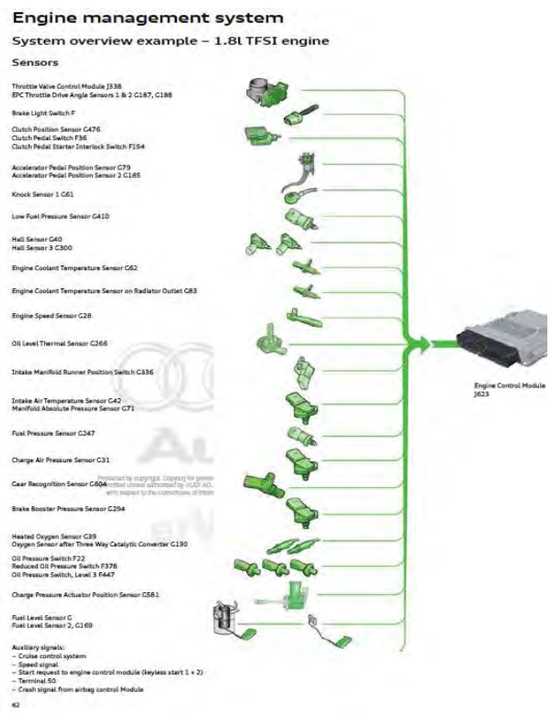

eSelf-Study Program 920243

As shown below, DTC P03AF corresponds to a condition where Cylinder 3 pressure is too high (implying that at least combustion pressure in Cylinder 3 is measured). The PCM calculates combustion pressure derived from the knock sensor input.

2014 Volkswagen Passat Sedan (A32) L4-1.8L Turbo (CPKA)

Vehicle » A L L Diagnostic Trouble Codes (DTC) » Testing and Inspection » P Code Charts » P03AF » Engine Control Module, 2015 MY

ENGINE CONTROL MODULE, 2015 MY

Engine Control Module, 2015 MY

DTC / Description	Monitor Strategy Description	Malfunction Criteria and Threshold Value	Secondary Parameters with Enable Conditions	Monitoring Time Length	MIL Illumination	Component Diagnostic Procedure
		Case 2: Ratio between normalised engine roughness and misfire detection threshold <= n.a. [-] Or Case 3: Ratio between filtered engine roughness and misfire detection threshold <= n.a. [-] Or Ratio between normalised engine roughness and misfire detection threshold <= n.a. [-]				
P03AF Cylinder 3 Pressure Too High	Knock Control Function Check	Slow detection: Ratio between knock sensor and knock threshold in main knock window > 2.0 to 3.0 [-] For time >= 9,000.0 to 11,700.0° CRK Or Ratio between knock sensor and	Engine running ECT @ cylinder block > 60° C Engine speed 1,216 to 6,400 RPM Engine load n.a. % Mass air flow > 403.0 to 501.0 mg/stk	900.0° CRK Continuous	2 DCY	Check the Knock Sensor 1 (G61) . Refer to ⇒ [Knock Sensor 1 (G61), Checking].

P03AF Cylinder 3 Pressure Too High	Knock Control Function Check	Slow detection: Ratio between knock sensor and knock threshold in main knock window > 2.0 to 3.0 [-] For time >= 9,000.0 to 11,700.0° CRK Or Ratio between knock sensor and noise level in pre knock window > 3.50 to 5.0 [-] For time >= 5,760.0 to 6,840.0° CRK Or	Engine running ECT @ cylinder block > 60° C Engine speed 1,216 to 6,400 RPM Engine load n.a. % Mass air flow > 403.0 to 501.0 mg/stk Dynamic engine speed not active Delay time n.a.	900.0° CRK Continuously	2 DCY	Check the Knock Sensor 1 (G61) . Refer to ⇒ Knock Sensor 1 (G61), Checking .

Zoom Sized for Print

DTC / Description	Monitor Strategy Description	Malfunction Criteria and Threshold Value	Secondary Parameters with Enable Conditions	Monitoring Time Length	MIL illumination	Component Diagnostic Procedure
		Ratio between knock sensor and noise level in pre knock window > 3.50 to 5.0 [-] Ratio between knock sensor and knock threshold in main knock window > 2.0 to 3.0 [-] For time >= 12,960.0 to 16,740.0° CRK Or Torque limitation factor < 0.90 [-]				
		Fast detection: Ratio between knock sensor and knock threshold in main knock window > 1.50 to 2.50 [-] For time >= 540.0° CRK Or Ratio between knock sensor and noise level in pre knock window > 2.75 to 4.50 [-] For time >= 360.0° CRK Case 1: Ratio between filtered engine roughness and misfire detection threshold <= 0.41 to 0.59 [-] Or	Engine running ECT @ cylinder block > 60° C Engine speed 1,216 to 6,400 RPM Engine load n.a. % Mass air flow > 403.0 to 501.0 mg/stk Misfire detection active Dynamic engine speed not active Delay time n.a.			

Zoom Sized for Print

		CRK Or Ratio between knock sensor and noise level in pre knock window > 2.75 to 4.50 [-] For time >= 360.0° CRK Case 1: Ratio between filtered engine roughness and misfire detection threshold <= 0.41 to 0.59 [-] Or	1,216 to 6,400 RPM Engine load n.a. % Mass air flow > 403.0 to 501.0 mg/stk Misfire detection active Dynamic engine speed not active Delay time n.a.			

Zoom Sized for Print

DTC / Description	Monitor Strategy Description	Malfunction Criteria and Threshold Value	Secondary Parameters with Enable Conditions	Monitoring Time Length	MIL Illumination	Component Diagnostic Procedure
		Case 2: Ratio between normalised engine roughness and misfire detection threshold <= n.a. [-] Or Case 3: Ratio between filtered engine roughness and misfire detection threshold <= n.a. [-] Or Ratio between normalised engine roughness and misfire detection threshold <= n.a. [-]				
P0389 Cylinder 4 Pressure Too High	Knock Control Function Check	Slow detection: Ratio between knock sensor and knock threshold in main knock window > 2.0 to 3.0 [-] For time >= 9,000.0 to 11,700.0° CRK Or Ratio between knock sensor and noise level in pre knock window > 3.50 to 5.0 [-] For time >= 5,760.0 to 6,840.0° CRK Or	Engine running ECT @ cylinder block > 60° C Engine speed 1,216 to 6,400 RPM Engine load n.a. % Mass air flow > 403.0 to 501.0 mg/stk Dynamic engine speed not active Delay time n.a.	900.0° CRK Continuous	2 DCY	Check the Knock Sensor 1 (G61) Refer to ⇒ [Knock Sensor 1 (G61): Checking].

Zoom Sized for Print

ALLDATA

The ECM/PCM detects cylinder pressure as demonstrated by the Diagnostic Trouble Code (DTC) shown above. Based upon information and belief, the cylinder pressure is measured at least at two discrete times during a combustion cycle.

Figure 94

As shown below, DTC P03AF corresponds to a condition where Cylinder 3 pressure is too high (implying that at least combustion pressure in Cylinder 3 is measured). The PCM calculates combustion pressure derived from the knock sensor input. Additionally, the PCM calculates the cylinder pressure (combustion pressure) at two discrete times in both the main knock window and the pre-knock window, the net pressure (difference between second and first discrete combustion pressure measurements) is calculated.

2014 Volkswagen Passat Sedan (A32) L4-1.8L Turbo (CPKA)

Vehicle » A L L Diagnostic Trouble Codes (DTC) » Testing and Inspection » P Code Charts » P03AF » Engine Control Module, 2015 MY

ENGINE CONTROL MODULE, 2015 MY

Engine Control Module, 2015 MY

DTC / Description	Monitor Strategy Description	Malfunction Criteria and Threshold Value	Secondary Parameters with Enable Conditions	Monitoring Time Length	MIL Illumination	Component Diagnostic Procedure
		Case 2: Ratio between normalised engine roughness and misfire detection threshold <= n.a. [-] Or Case 3: Ratio between filtered engine roughness and misfire detection threshold <= n.a. [-] Or Ratio between normalised engine roughness and misfire detection threshold <= n.a. [-]				
P03AF Cylinder 3 Pressure Too High	Knock Control Function Check	Slow detection: Ratio between knock sensor and knock threshold in main knock window > 2.0 to 3.0 [-] For time >= 9,000.0 to 11,700.0° CRK Or Ratio between knock sensor and	Engine running ECT @ cylinder block > 60° C Engine speed 1,216 to 6,400 RPM Engine load n.a. % Mass air flow > 403.0 to 501.0 mg/stk	900.0° CRK Continuous	2 DCY	Check the Knock Sensor 1 (G61) . Refer to ⇒ [Knock Sensor 1 (G61), Checking].

P03AF Cylinder 3 Pressure Too High	Knock Control Function Check	Slow detection: Ratio between knock sensor and knock threshold in main knock window > 2.0 to 3.0 [-] For time >= 9,000.0 to 11,700.0° CRK Or Ratio between knock sensor and noise level in pre knock window > 3.50 to 5.0 [-] For time >= 5,760.0 to 6,840.0° CRK Or	Engine running ECT @ cylinder block > 60° C Engine speed 1,216 to 6,400 RPM Engine load n.a. % Mass air flow > 403.0 to 501.0 mg/stk Dynamic engine speed not active Delay time n.a.	900.0° CRK Continuously	2 DCY	Check the Knock Sensor 1 (G61) . Refer to ⇒ Knock Sensor 1 (G61), Checking .

Zoom Sized for Print

DTC / Description	Monitor Strategy Description	Malfunction Criteria and Threshold Value	Secondary Parameters with Enable Conditions	Monitoring Time Length	MIL illumination	Component Diagnostic Procedure
		Ratio between knock sensor and noise level in pre knock window > 3.50 to 5.0 [-] Ratio between knock sensor and knock threshold in main knock window > 2.0 to 3.0 [-] For time >= 12,960.0 to 16,740.0° CRK Or Torque limitation factor < 0.90 [-]				
		Fast detection: Ratio between knock sensor and knock threshold in main knock window > 1.50 to 2.50 [-] For time >= 540.0° CRK Or Ratio between knock sensor and noise level in pre knock window > 2.75 to 4.50 [-] For time >= 360.0° CRK Case 1: Ratio between filtered engine roughness and misfire detection threshold <= 0.41 to 0.59 [-] Or	Engine running ECT @ cylinder block > 60° C Engine speed 1,216 to 6,400 RPM Engine load n.a. % Mass air flow > 403.0 to 501.0 mg/stk Misfire detection active Dynamic engine speed not active Delay time n.a.			

Zoom Sized for Print

		CRK Or Ratio between knock sensor and noise level in pre knock window > 2.75 to 4.50 [-] For time >= 360.0° CRK Case 1: Ratio between filtered engine roughness and misfire detection threshold <= 0.41 to 0.59 [-] Or	1,216 to 6,400 RPM Engine load n.a. % Mass air flow > 403.0 to 501.0 mg/stk Misfire detection active Dynamic engine speed not active Delay time n.a.			

Zoom Sized for Print

DTC / Description	Monitor Strategy Description	Malfunction Criteria and Threshold Value	Secondary Parameters with Enable Conditions	Monitoring Time Length	MIL Illumination	Component Diagnostic Procedure
		Case 2: Ratio between normalised engine roughness and misfire detection threshold <= n.a. [-] Or Case 3: Ratio between filtered engine roughness and misfire detection threshold <= n.a. [-] Or Ratio between normalised engine roughness and misfire detection threshold <= n.a. [-]				
P0389 Cylinder 4 Pressure Too High	Knock Control Function Check	Slow detection: Ratio between knock sensor and knock threshold in main knock window > 2.0 to 3.0 [-] For time >= 9,000.0 to 11,700.0° CRK Or Ratio between knock sensor and noise level in pre knock window > 3.50 to 5.0 [-] For time >= 5,760.0 to 6,840.0° CRK Or	Engine running ECT @ cylinder block > 60° C Engine speed 1,216 to 6,400 RPM Engine load n.a. % Mass air flow > 403.0 to 501.0 mg/stk Dynamic engine speed not active Delay time n.a.	900.0° CRK Continuous	2 DCY	Check the Knock Sensor 1 (G61) : Refer to ⇒ [Knock Sensor 1 (G61): Checking].

Zoom Sized for Print

ALLDATA

The ECM/PCM detects cylinder pressure as demonstrated by the Diagnostic Trouble Code (DTC) shown above. Based upon information and belief, the ECM/PCM calculates a net combustion pressure change based on measured combustion pressures in service of achieving maximum brake torque (MBT).

Figure 95

The ’497 patent Accused Instrumentalities practice a method of controlling an internal combustion engine, said engine having at least one cylinder, wherein said method comprises calculating the second derivative of said net combustion pressure change.

2014 Volkswagen Passat Sedan (A32) L4-1.8L Turbo (CPKA)

Vehicle » A L L Diagnostic Trouble Codes (DTC) » Testing and Inspection » P Code Charts » P03AF » Engine Control Module, 2015 MY

ENGINE CONTROL MODULE, 2015 MY

Engine Control Module, 2015 MY

DTC / Description	Monitor Strategy Description	Malfunction Criteria and Threshold Value	Secondary Parameters with Enable Conditions	Monitoring Time Length	MIL Illumination	Component Diagnostic Procedure
		Case 2: Ratio between normalised engine roughness and misfire detection threshold <= n.a. [-] Or Case 3: Ratio between filtered engine roughness and misfire detection threshold <= n.a. [-] Or Ratio between normalised engine roughness and misfire detection threshold <= n.a. [-]				
P03AF Cylinder 3 Pressure Too High	Knock Control Function Check	Slow detection: Ratio between knock sensor and knock threshold in main knock window > 2.0 to 3.0 [-] For time >= 9,000.0 to 11,700.0° CRK Or Ratio between knock sensor and	Engine running ECT @ cylinder block > 60° C Engine speed 1,216 to 6,400 RPM Engine load n.a. % Mass air flow > 403.0 to 501.0 mg/stk	900.0° CRK Continuous	2 DCY	Check the Knock Sensor 1 (G61) . Refer to ⇒ [Knock Sensor 1 (G61), Checking].

P03AF Cylinder 3 Pressure Too High	Knock Control Function Check	Slow detection: Ratio between knock sensor and knock threshold in main knock window > 2.0 to 3.0 [-] For time >= 9,000.0 to 11,700.0° CRK Or Ratio between knock sensor and noise level in pre knock window > 3.50 to 5.0 [-] For time >= 5,760.0 to 6,840.0° CRK Or	Engine running ECT @ cylinder block > 60° C Engine speed 1,216 to 6,400 RPM Engine load n.a. % Mass air flow > 403.0 to 501.0 mg/stk Dynamic engine speed not active Delay time n.a.	900.0° CRK Continuous	2 DCY	Check the Knock Sensor 1 (G61) . Refer to ⇒ Knock Sensor 1 (G61), Checking .

Zoom Sized for Print

DTC / Description	Monitor Strategy Description	Malfunction Criteria and Threshold Value	Secondary Parameters with Enable Conditions	Monitoring Time Length	MIL illumination	Component Diagnostic Procedure
		Ratio between knock sensor and noise level in pre knock window > 3.50 to 5.0 [-] Ratio between knock sensor and knock threshold in main knock window > 2.0 to 3.0 [-] For time >= 12,960.0 to 16,740.0° CRK Or Torque limitation factor < 0.90 [-]				
		Fast detection: Ratio between knock sensor and knock threshold in main knock window > 1.50 to 2.50 [-] For time >= 540.0° CRK Or Ratio between knock sensor and noise level in pre knock window > 2.75 to 4.50 [-] For time >= 360.0° CRK Case 1: Ratio between filtered engine roughness and misfire detection threshold <= 0.41 to 0.59 [-] Or	Engine running ECT @ cylinder block > 60° C Engine speed 1,216 to 6,400 RPM Engine load n.a. % Mass air flow > 403.0 to 501.0 mg/stk Misfire detection active Dynamic engine speed not active Delay time n.a.			

Zoom Sized for Print

		CRK Or Ratio between knock sensor and noise level in pre knock window > 2.75 to 4.50 [-] For time >= 360.0° CRK Case 1: Ratio between filtered engine roughness and misfire detection threshold <= 0.41 to 0.59 [-] Or	1,216 to 6,400 RPM Engine load n.a. % Mass air flow > 403.0 to 501.0 mg/stk Misfire detection active Dynamic engine speed not active Delay time n.a.			

Zoom Sized for Print

DTC / Description	Monitor Strategy Description	Malfunction Criteria and Threshold Value	Secondary Parameters with Enable Conditions	Monitoring Time Length	MIL Illumination	Component Diagnostic Procedure
		Case 2: Ratio between normalised engine roughness and misfire detection threshold <= n.a. [-] Or Case 3: Ratio between filtered engine roughness and misfire detection threshold <= n.a. [-] Or Ratio between normalised engine roughness and misfire detection threshold <= n.a. [-]				
P0389 Cylinder 4 Pressure Too High	Knock Control Function Check	Slow detection: Ratio between knock sensor and knock threshold in main knock window > 2.0 to 3.0 [-] For time >= 9,000.0 to 11,700.0° CRK Or Ratio between knock sensor and noise level in pre knock window > 3.50 to 5.0 [-] For time >= 5,760.0 to 6,840.0° CRK Or	Engine running ECT @ cylinder block > 60° C Engine speed 1,216 to 6,400 RPM Engine load n.a. % Mass air flow > 403.0 to 501.0 mg/stk Dynamic engine speed not active Delay time n.a.	900.0° CRK Continuous	2 DCY	Check the Knock Sensor 1 (G61) : Refer to ⇒ [Knock Sensor 1 (G61): Checking].

Zoom Sized for Print

ALLDATA

The ECM/PCM has the ability to detect cylinder pressure at two discrete times as demonstrated by the Diagnostic Trouble Code (DTC) shown above. Based upon information and belief, the ECM/PCM calculates a second derivative of said net combustion pressure change.

Figure 96

The ’497 patent Accused Instrumentalities comprise a method of controlling an internal combustion engine, said engine having at least one cylinder, wherein said method comprises calculating the maximum acceleration point of said net combustion pressure change from said second derivative of said net combustion pressure change.

2014 Volkswagen Passat Sedan (A32) L4-1.8L Turbo (CPKA)

Vehicle » A L L Diagnostic Trouble Codes (DTC) » Testing and Inspection » P Code Charts » P03AF » Engine Control Module, 2015 MY

ENGINE CONTROL MODULE, 2015 MY

Engine Control Module, 2015 MY

DTC / Description	Monitor Strategy Description	Malfunction Criteria and Threshold Value	Secondary Parameters with Enable Conditions	Monitoring Time Length	MIL Illumination	Component Diagnostic Procedure
		Case 2: Ratio between normalised engine roughness and misfire detection threshold <= n.a. [-] Or Case 3: Ratio between filtered engine roughness and misfire detection threshold <= n.a. [-] Or Ratio between normalised engine roughness and misfire detection threshold <= n.a. [-]				
P03AF Cylinder 3 Pressure Too High	Knock Control Function Check	Slow detection: Ratio between knock sensor and knock threshold in main knock window > 2.0 to 3.0 [-] For time >= 9,000.0 to 11,700.0° CRK Or Ratio between knock sensor and	Engine running ECT @ cylinder block > 60° C Engine speed 1,216 to 6,400 RPM Engine load n.a. % Mass air flow > 403.0 to 501.0 mg/stk	900.0° CRK Continuous	2 DCY	Check the Knock Sensor 1 (G61) . Refer to ⇒ [Knock Sensor 1 (G61), Checking].

P03AF Cylinder 3 Pressure Too High	Knock Control Function Check	Slow detection: Ratio between knock sensor and knock threshold in main knock window > 2.0 to 3.0 [-] For time >= 9,000.0 to 11,700.0° CRK Or Ratio between knock sensor and noise level in pre knock window > 3.50 to 5.0 [-] For time >= 5,760.0 to 6,840.0° CRK Or	Engine running ECT @ cylinder block > 60° C Engine speed 1,216 to 6,400 RPM Engine load n.a. % Mass air flow > 403.0 to 501.0 mg/stk Dynamic engine speed not active Delay time n.a.	900.0° CRK Continuously	2 DCY	Check the Knock Sensor 1 (G61) . Refer to ⇒ Knock Sensor 1 (G61), Checking .

Zoom Sized for Print

DTC / Description	Monitor Strategy Description	Malfunction Criteria and Threshold Value	Secondary Parameters with Enable Conditions	Monitoring Time Length	MIL illumination	Component Diagnostic Procedure
		Ratio between knock sensor and noise level in pre knock window > 3.50 to 5.0 [-] Ratio between knock sensor and knock threshold in main knock window > 2.0 to 3.0 [-] For time >= 12,960.0 to 16,740.0° CRK Or Torque limitation factor < 0.90 [-]				
		Fast detection: Ratio between knock sensor and knock threshold in main knock window > 1.50 to 2.50 [-] For time >= 540.0° CRK Or Ratio between knock sensor and noise level in pre knock window > 2.75 to 4.50 [-] For time >= 360.0° CRK Case 1: Ratio between filtered engine roughness and misfire detection threshold <= 0.41 to 0.59 [-] Or	Engine running ECT @ cylinder block > 60° C Engine speed 1,216 to 6,400 RPM Engine load n.a. % Mass air flow > 403.0 to 501.0 mg/stk Misfire detection active Dynamic engine speed not active Delay time n.a.			

Zoom Sized for Print

		CRK Or Ratio between knock sensor and noise level in pre knock window > 2.75 to 4.50 [-] For time >= 360.0° CRK Case 1: Ratio between filtered engine roughness and misfire detection threshold <= 0.41 to 0.59 [-] Or	1,216 to 6,400 RPM Engine load n.a. % Mass air flow > 403.0 to 501.0 mg/stk Misfire detection active Dynamic engine speed not active Delay time n.a.			

Zoom Sized for Print

DTC / Description	Monitor Strategy Description	Malfunction Criteria and Threshold Value	Secondary Parameters with Enable Conditions	Monitoring Time Length	MIL Illumination	Component Diagnostic Procedure
		Case 2: Ratio between normalised engine roughness and misfire detection threshold <= n.a. [-] Or Case 3: Ratio between filtered engine roughness and misfire detection threshold <= n.a. [-] Or Ratio between normalised engine roughness and misfire detection threshold <= n.a. [-]				
P0389 Cylinder 4 Pressure Too High	Knock Control Function Check	Slow detection: Ratio between knock sensor and knock threshold in main knock window > 2.0 to 3.0 [-] For time >= 9,000.0 to 11,700.0° CRK Or Ratio between knock sensor and noise level in pre knock window > 3.50 to 5.0 [-] For time >= 5,760.0 to 6,840.0° CRK Or	Engine running ECT @ cylinder block > 60° C Engine speed 1,216 to 6,400 RPM Engine load n.a. % Mass air flow > 403.0 to 501.0 mg/stk Dynamic engine speed not active Delay time n.a.	900.0° CRK Continuous	2 DCY	Check the Knock Sensor 1 (G61) : Refer to ⇒ [Knock Sensor 1 (G61): Checking].

Zoom Sized for Print

ALLDATA

The ECM/PCM has the ability to detect cylinder pressure at two discrete times as demonstrated by the Diagnostic Trouble Code (DTC) shown above. Based upon information and belief, the ECM/PCM calculates a maximum acceleration point of a net combustion pressure change from said second derivative of said net combustion pressure change.

Figure 97

The ’497 patent Accused Instrumentalities comprise a method of controlling an internal combustion engine, said engine having at least one cylinder, wherein said method comprises varying the spark timing of said engine until said maximum acceleration point is aligned with top dead center to achieve maximum braking torque spark timing.

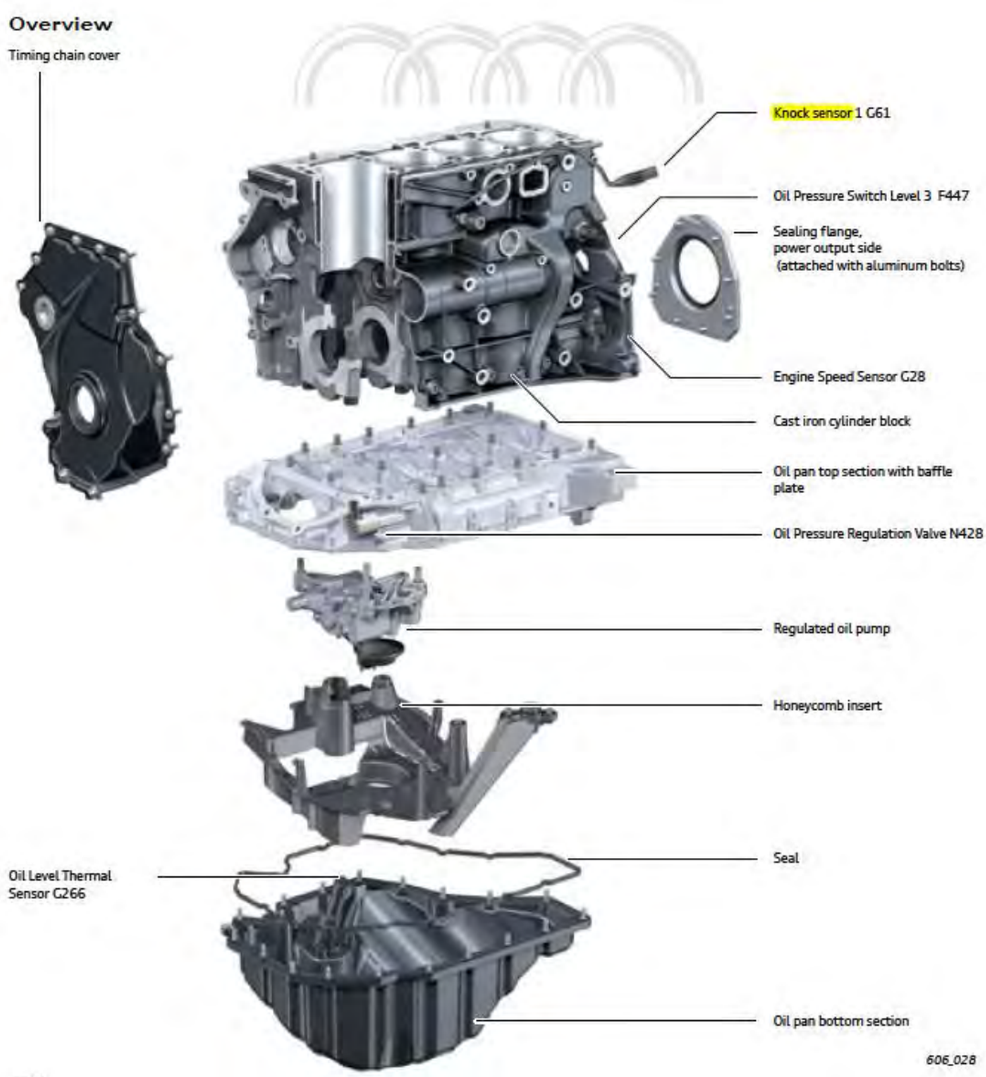

The ECM has the ability to retard ignition timing (vary spark timing) based on knock detection as this has been the state of the art for quite some time. Based upon information and belief, the ECM varies the spark timing of the engine until the maximum acceleration point is aligned with top dead center to achieve maximum braking torque spark timing.

Figure 98

Based upon the totality of the foregoing evidence, and based further upon information and belief, the ’497 patent Accused Instrumentalities practice “a method of controlling an internal combustion engine, said engine having at least one cylinder, said method comprising the steps of: measuring the combustion pressure in said at least one cylinder at at least two discrete times during a combustion cycle; calculating a net combustion pressure change in said at least one cylinder based on said measured combustion pressures; calculating the second derivative of said net combustion pressure change; calculating the maximum acceleration point of said net combustion pressure change from said second derivative of said net combustion pressure change;

and varying the spark timing of said engine until said maximum acceleration point is aligned with top dead center to achieve maximum braking torque spark timing."

COUNT XIV – INVIIIFRINGEMENT OF U.S. PATENT NO. 6,571,157

101. The allegations set forth in the foregoing paragraphs 1 through 100 are incorporated into this Fourteenth Claim for Relief.

102. On May 23, 2003, U.S. Patent No. 6,571,157 ("the '157 patent"), entitled "Oil Pressure Diagnostic Strategy for a Hybrid Electric Vehicle," was duly and legally issued by the United States Patent and Trademark Office. A true and correct copy of the '157 patent is attached as Exhibit 14.

103. Plaintiff is the assignee and owner of the right, title and interest in and to the '157 patent, including the right to assert all causes of action arising under said patents and the right to any remedies for infringement of them.

104. Upon information and belief, Defendants have directly infringed at least claims 1 and 14 of the '157 patent by making, using, selling, importing and/or providing and causing to be used the 2013-2017 Volkswagen Jetta Hybrid and 2016-2018 Audi A3 Sportback e-tron (the "'157 patent Accused Instrumentalities").

105. In particular, claim 1 of the '157 patent recites a diagnostic system for controlling an engine low oil pressure indicator in a hybrid electric vehicle, comprising: a powertrain having an engine and an electric traction motor; an oil pressure sensor/sending unit mechanically connected to the engine; an engine speed sensor/sending unit mechanically connected to the engine; a controller having connections to the oil pressure sensor and engine speed sensor; a low oil pressure indicator electrically connected to the controller; a mode selector having modes for "off" and "run/start"; and the controller configured to prevent activation of the low oil pressure indicator when the mode selector is in the "run/start" mode and the engine is not running.

106. On information and belief, the ’157 patent Accused Instrumentalities infringe claim 1 of the ’157 patent. The ’157 patent Accused Instrumentalities comprise a diagnostic system for controlling an engine low oil pressure indicator in a hybrid electric vehicle (*Figure 99*), comprising: a powertrain having an engine and an electric traction motor (*Figure 100*); an oil pressure sensor/sending unit mechanically connected to the engine (*Figure 101*); an engine speed sensor/sending unit mechanically connected to the engine (*Figure 102*); a controller having connections to the oil pressure sensor and engine speed sensor (*Figure 103*); a low oil pressure indicator electrically connected to the controller (*Figure 104*); a mode selector having modes for “off” and “run/start” (*Figure 105*); and the controller configured to prevent activation of the low oil pressure indicator when the mode selector is in the “run/start” mode and the engine is not running (*Figure 106*).

As demonstrated in the exemplary images below, the ’157 patent Accused Instrumentalities comprise a data bus diagnostic interface, which controls an engine low oil pressure indicator via the CAN data Bus, Engine Control Module (ECM), and dash panel.

Audi eTron dashboard engine oil pressure indicator example from the owner’s manual

Audi A3 Wiring Diagram No. 4 / 14

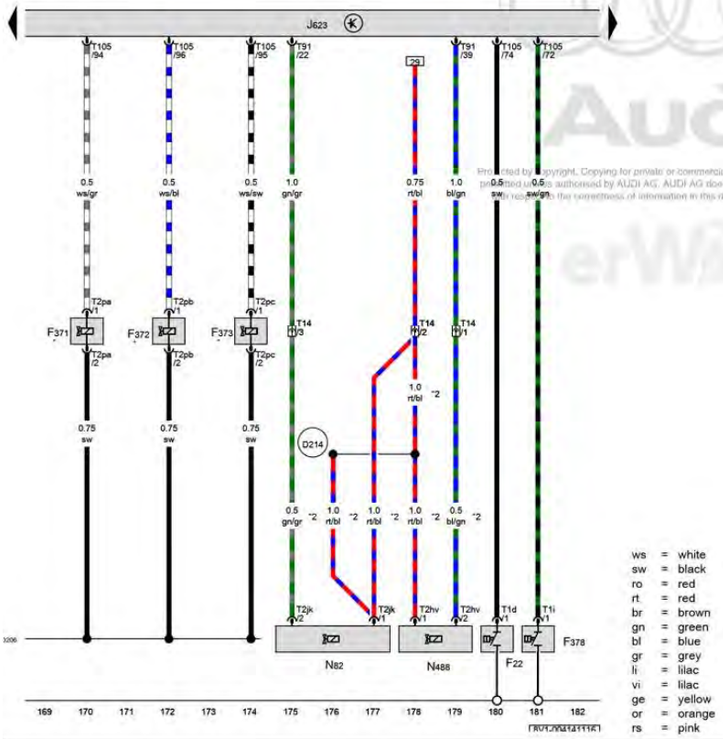

Oil pressure switch, Cam adjustment actuator 6, Cam adjustment actuator 7, Cam adjustment actuator 8, Reduced oil pressure switch, Engine control module, Coolant shut-off valve, Transmission coolant valve

F22	Oil pressure switch
F371	Cam adjustment actuator 6
F372	Cam adjustment actuator 7
F373	Cam adjustment actuator 8
F378	Reduced oil pressure switch
J623	Engine control module
N82	Coolant shut-off valve
N488	Transmission coolant valve
T1d	1-pin connector
T1i	1-pin connector
T2hv	2-pin connector
T2jk	2-pin connector
T2pa	2-pin connector
T2pb	2-pin connector
T2pc	2-pin connector
T14	14-pin connector
T91	91-pin connector
T105	105-pin connector
D206	Connection 87a (in engine pre-wiring harness) 4
D214	Connection 8 (87a) (in engine compartment wiring harness)
*	Only for vehicles without US equipment
*2	Depending on equipment

ws	=	white
sw	=	black
ro	=	red
rt	=	red
br	=	brown
gn	=	green
bl	=	blue
gr	=	grey
li	=	lilac
vi	=	lilac
ge	=	yellow
or	=	orange
rs	=	pink

11.2016

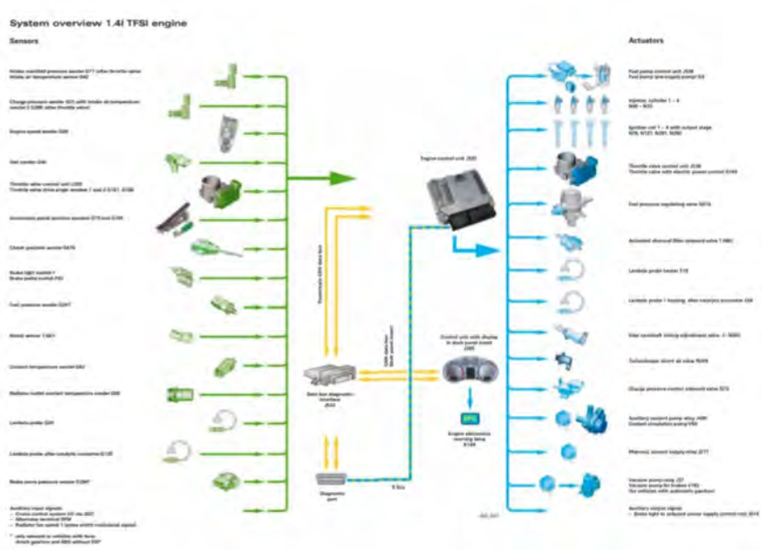

4 Oil Filter/Oil Pressure Switch

⇒ "4.1 Overview - Oil Filter/Oil Pressure Switch", page 309

⇒ "4.3 Oil Pressure Switch F1 / Reduced Oil Pressure Switch F378 , Removing and Installing", page 312

⇒ "4.2 Oil Pressure Switch F22 , Removing and Installing", page 310

⇒ "4.4 Oil Pressure Regulation Valve N428 , Removing and Installing", page 314

⇒ "4.5 Oil Pressure, Checking", page 314

4.1 Overview - Oil Filter/Oil Pressure Switch

1 - Oil Filter

- ❑ See note. Refer to ⇒ page 284 .
- ❑ Removing and installing. Refer to ⇒ Maintenance ; Booklet 821 .
- ❑ Secure loosened oil filter threaded connection. Refer to ⇒ Fig. ""Retainer Threaded Connection for the Oil Filter"" , page 310 .

2 - Oil Pressure Switch

- ❑ 20 Nm

♦ 1.2L TFSI (without oil pressure regulation): Oil Pressure Switch - F1-

♦ 1.4L TFSI (with oil pressure regulation): Reduced Oil Pressure Switch - F378-

- ❑ Switching pressure: 0.3 to 0.6 bar (4.351 to 8.702 psi)
- ❑ Green insulation
- ❑ Check in Guided Fault Finding. Refer to Vehicle Diagnostic Tester .
- ❑ Removing and installing. Refer to ⇒ "4.3 Oil Pressure Switch F1 / Reduced Oil Pressure Switch F378 , Removing and Installing", page 312 .

3 - Seal

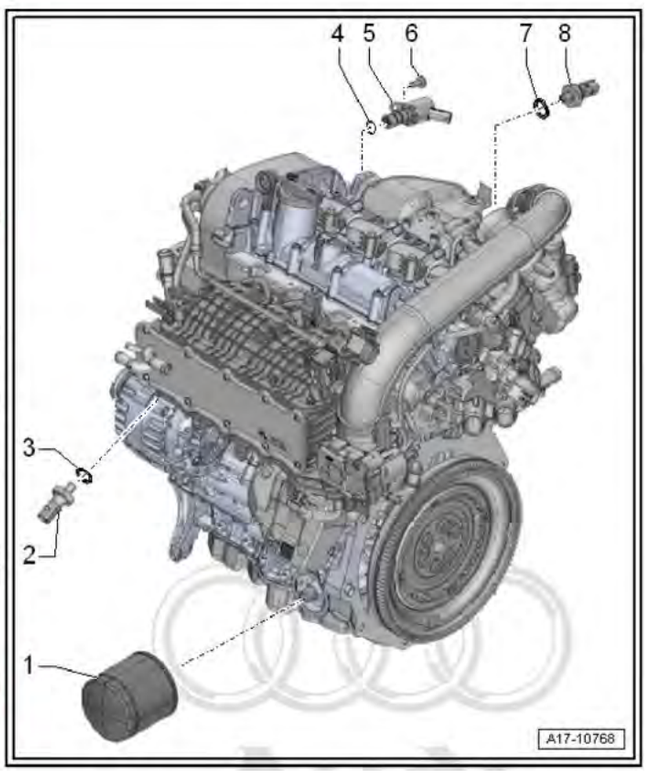

Internal combustion engine

The A3 Sportback e-tron uses the EA211 series 1.4l engine. Because the transmission is 2.26 in (57.5 mm) longer to accommodate the e-machine, the engine is mounted further to the right than in the standard A3 Sportback.

The main bearings, the connecting rod big end bearings and the piston rings of this engine have special coatings. In addition, piston backlash has been adapted and the cylinder liners are plasma-coated.

The Audi A3 Sportback e-tron can be driven in electric-only mode. This can result in periods of time during which the internal combustion engine is not in use.

During electric-only driving, the internal combustion engine can start in order to heat up the catalytic converter.

To ensure wear-free starting of the internal combustion engine after electric-only operation, clutch K0 closes and the e-machine turns the engine over until sufficient oil pressure is obtained.

In the U.S. market, the engine is also equipped with secondary air injection.

Figure 99

As demonstrated in the exemplary images below, the ’157 patent Accused Instrumentalities comprise an electric traction motor (Electro-drive Drive Motor V141).

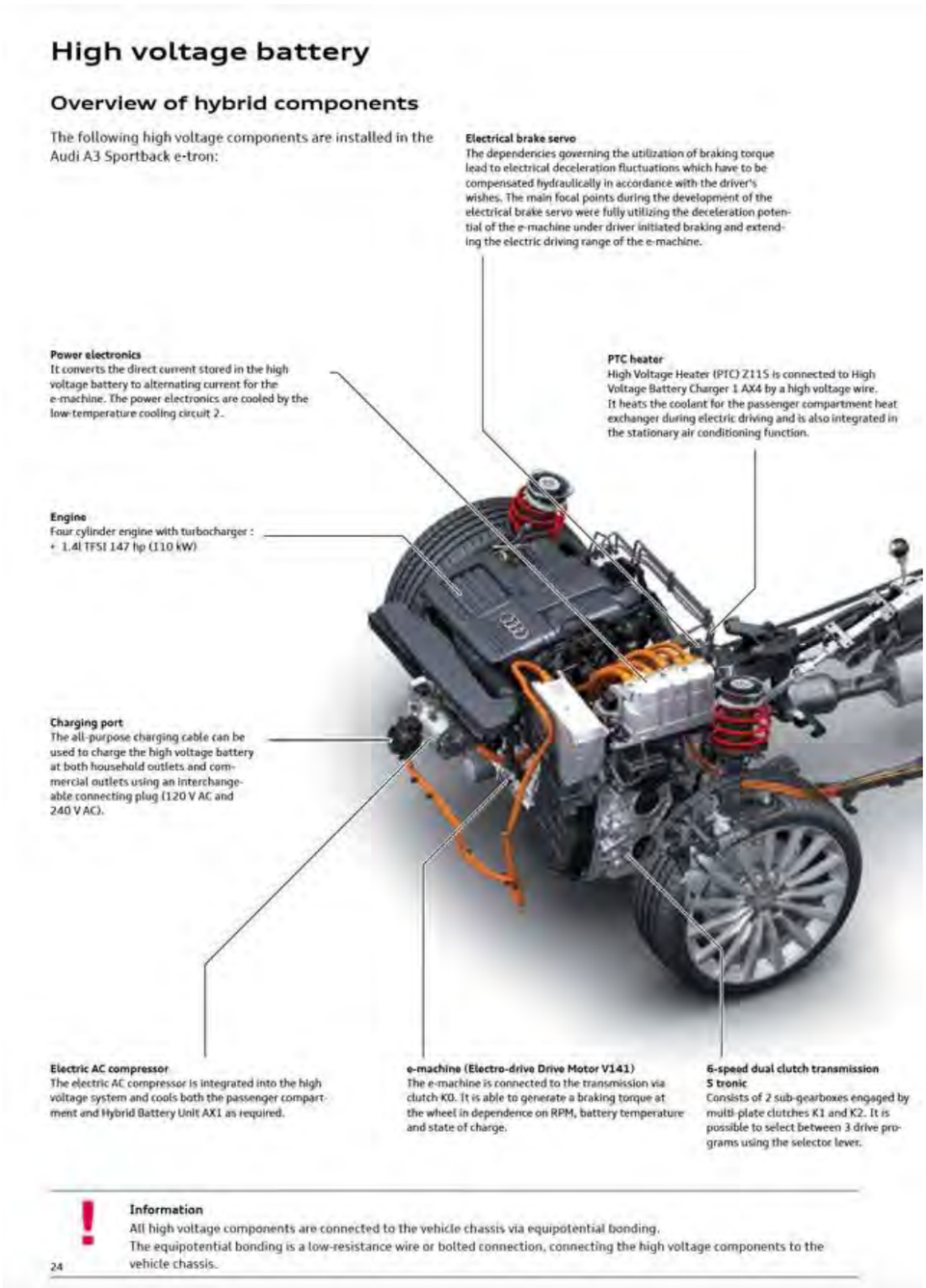

Figure 100

As demonstrated in the exemplary images below, the ’157 patent Accused Instrumentalities comprise an oil pressure sensor/sending unit (# 2) mechanically connected to the engine.

4 Oil Filter/Oil Pressure Switch

⇒ "4.1 Overview - Oil Filter/Oil Pressure Switch", page 309

⇒ "4.3 Oil Pressure Switch F1 / Reduced Oil Pressure Switch F378 , Removing and Installing", page 312

⇒ "4.2 Oil Pressure Switch F22 , Removing and Installing", page 310

⇒ "4.4 Oil Pressure Regulation Valve N428 , Removing and Installing", page 314

⇒ "4.5 Oil Pressure, Checking", page 314

4.1 Overview - Oil Filter/Oil Pressure Switch

1 - Oil Filter
- ❑ See note. Refer to ⇒ page 284 .
- ❑ Removing and installing. Refer to ⇒ Maintenance ; Booklet 821 .
- ❑ Secure loosened oil filter threaded connection. Refer to ⇒ Fig. ""Retainer Threaded Connection for the Oil Filter"" , page 310 .

2 - Oil Pressure Switch
- ❑ 20 Nm
- ♦ 1.2L TFSI (without oil pressure regulation): Oil Pressure Switch - F1-
- ♦ 1.4L TFSI (with oil pressure regulation): Reduced Oil Pressure Switch - F378-
  - ❑ Switching pressure: 0.3 to 0.6 bar (4.351 to 8.702 psi)
  - ❑ Green insulation
  - ❑ Check in Guided Fault Finding. Refer to Vehicle Diagnostic Tester .
  - ❑ Removing and installing. Refer to ⇒ "4.3 Oil Pressure Switch F1 / Reduced Oil Pressure Switch F378 , Removing and Installing", page 312 .

3 - Seal

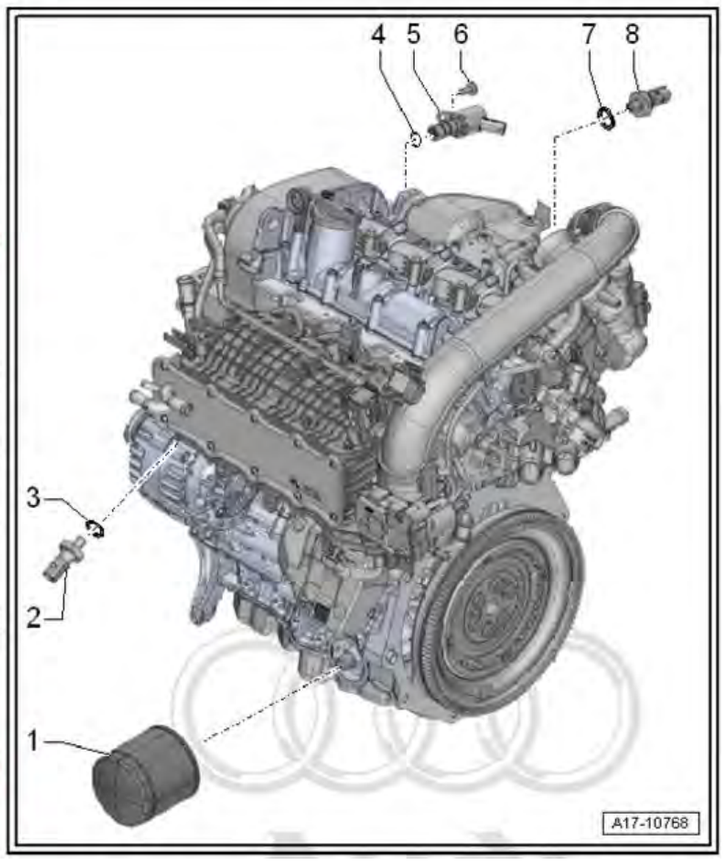

Figure 101

As demonstrated in the exemplary images below, the '157 patent Accused Instrumentalities comprise an engine speed sensor/sending unit (G28) mechanically connected to the engine.

1.1 Overview - Ignition System

1 - Bolt
- 20 Nm
- The tightening specifications affect function of the knock sensor

2 - Knock Sensor 1 - G61-
- Removing and installing. Refer to ⇒ "1.4 Knock Sensor 1 G61 , Removing and Installing", page 543 .

3 - Spark Plug
- Tightening specification. Refer to ⇒ Maintenance ; Booklet 821 .
- Remove and install with the Spark Plug Removal Tool - 3122B- . Refer to ⇒ Maintenance ; Booklet 821 .
- Replacement interval. Refer to ⇒ Maintenance Intervals; Rep. Gr. 03 .

4 - Ignition Coil with Power Output Stage
- Ignition Coil 1 with Power Output Stage - N70-
- Ignition Coil 2 with Power Output Stage - N127-
- Ignition Coil 3 with Power Output Stage - N291-
- Ignition Coil 4 with Power Output Stage - N292-
- Removing and installing. Refer to ⇒ "1.3 Ignition Coils with Power Output Stages, Removing and Installing", page 541 .

5 - Bolt
- 8 Nm

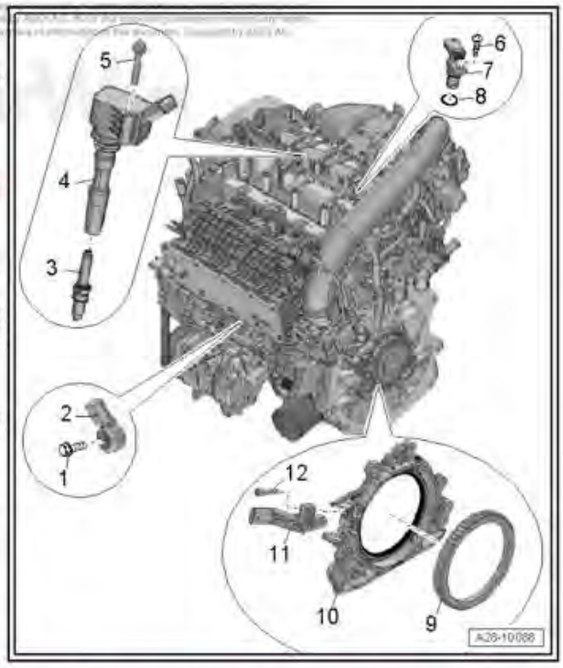

6 - Bolt
- 8 Nm

7 - Camshaft Position Sensor - G40-
- Removing and installing. Refer to ⇒ "1.5 Camshaft Position Sensor, Removing and Installing", page 544 .
- Engine codes CPTA, CZEA, CWLA, CSSA, CUKB, CXUA: also Camshaft Position Sensor 2 - G163-

8 - O-ring
- Replace if damaged

9 - Sensor Wheel
- For the Engine Speed Sensor - G28-
- Unit with sealing flange on the transmission side

10 - Transmission Side Sealing Flange
- Removing and installing. Refer to ⇒ "2.3 Sealing Flange, Removing and Installing, Transmission Side", page 111 .

11 - Engine Speed Sensor - G28-
- Removing and installing. Refer to ⇒ "1.6 Engine Speed Sensor G28 , Removing and Installing", page 547 .

12 - Bolt
- 4.5 Nm

Figure 102

The ’157 patent Accused Instrumentalities comprise a Controller Area Network (CAN), the ECM and have connections to the oil pressure sensor and the engine speed sensor via the ECM.

As implied in the exemplary image immediately below, the oil pressure sender is connected to the ECM (J623).

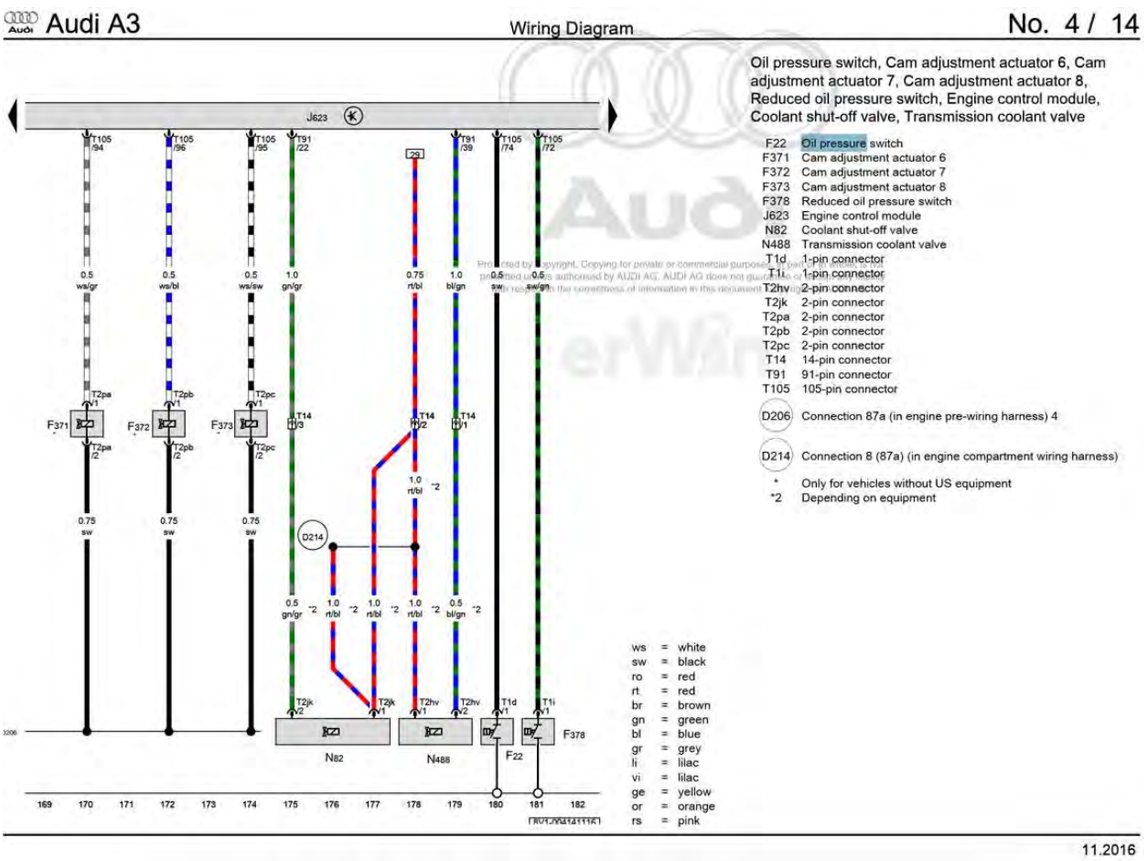

As implied in the exemplary image immediately below, the engine speed sensor is connected to the PCM which receives and evaluates signals and send those signals out on the Controller Area Network (CAN data bus).

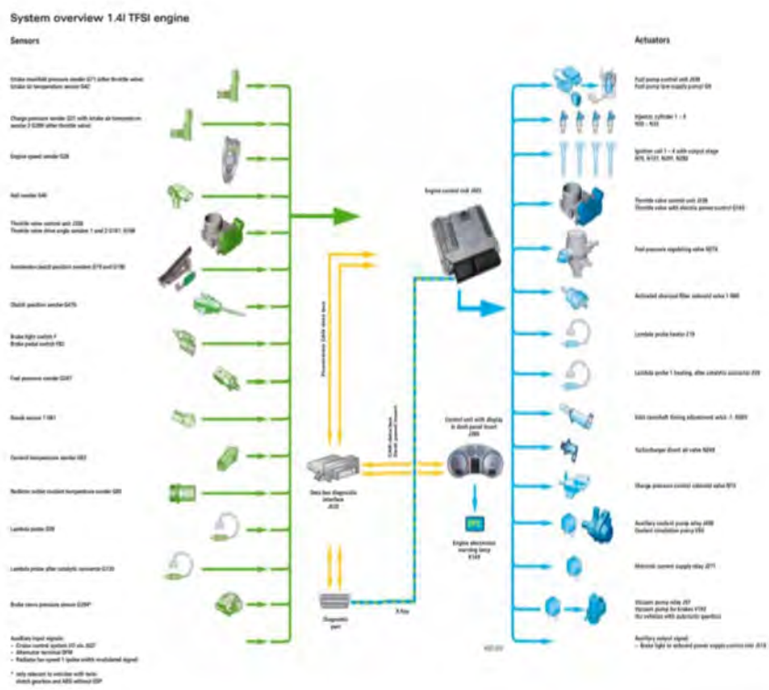

Figure 103

The ’157 patent Accused Instrumentalities comprise the CAN data bus, which is a controller electrically connected to the low oil pressure indicator in the dash panel via the ECM, as shown in the exemplary images below.

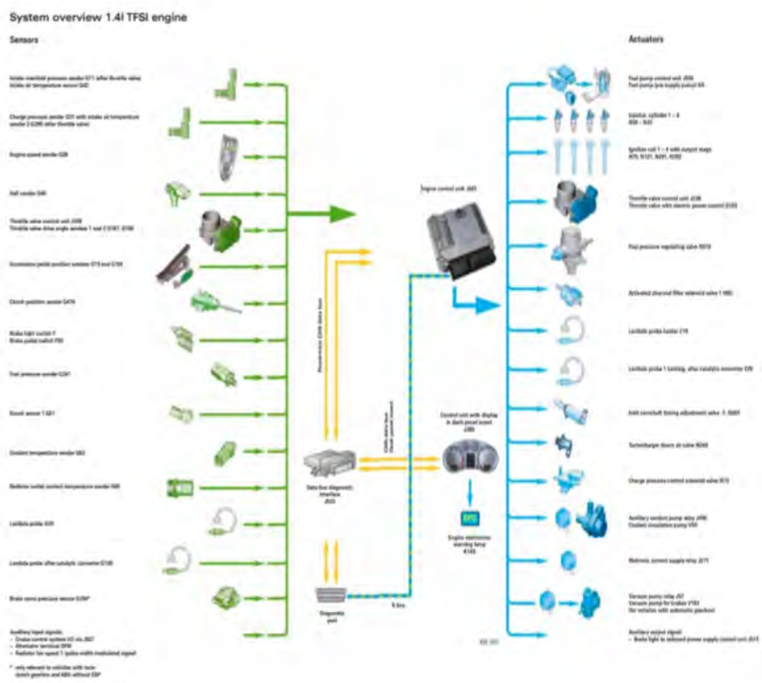

Figure 104

The '157 patent Accused Instrumentalities comprise a mode selector having modes for "off" and "run/start.

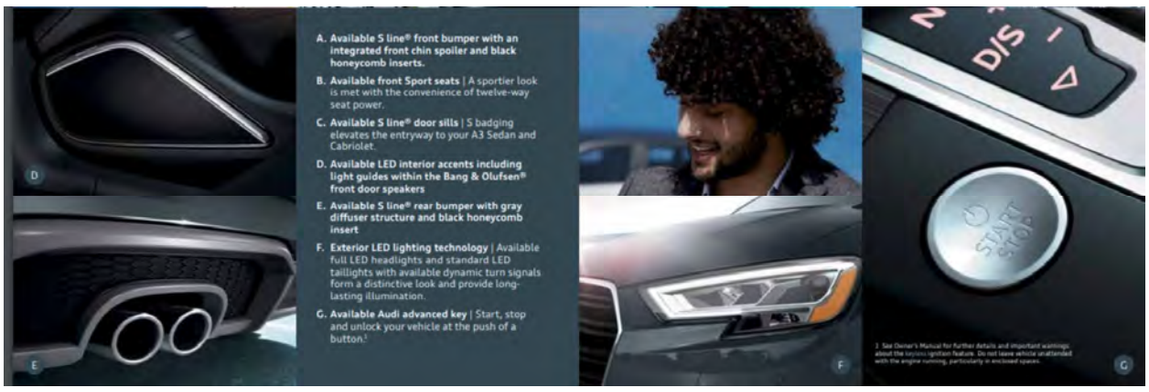

Audi A3 Owner's Manual

Figure 105

As demonstrated in the exemplary images below, the '157 patent Accused Instrumentalities comprise the Hybrid Manager software in the ECM J623 that prevents activation of the low oil pressure indicator when the vehicle comes to a stop (engine auto stop when vehicle in run/start mode) or during electric motor only driving.

Hybrid manager

The software of Engine Control Module J623 has been extended to include the hybrid manager function.

- Operating strategy.
- Torque distribution to Electro-drive Drive Motor V141 and the internal combustion engine.
- High voltage coordinator.
- Recuperation under braking and acceleration.
- Control of the coolant circuits.

The following hybrid-specific functions of the vehicle are controlled by the hybrid manager.

- Control of hybrid displays.
- Power meter.
- Display in dash panel insert.
- MMI energy flow diagrams.
- e-tron statistics.

Internal combustion engine

The A3 Sportback e-tron uses the EA211 series 1.4l engine. Because the transmission is 2.26 in (57.5 mm) longer to accommodate the e-machine, the engine is mounted further to the right than in the standard A3 Sportback.

The main bearings, the connecting rod big end bearings and the piston rings of this engine have special coatings. In addition, piston backlash has been adapted and the cylinder liners are plasma-coated.

The Audi A3 Sportback e-tron can be driven in electric-only mode. This can result in periods of time during which the internal combustion engine is not in use.

During electric-only driving, the internal combustion engine can start in order to heat up the catalytic converter.

To ensure wear-free starting of the internal combustion engine after electric-only operation, clutch K0 closes and the e-machine turns the engine over until sufficient oil pressure is obtained.

In the U.S. market, the engine is also equipped with secondary air injection.

Engine start

The internal combustion engine is started by the e-machine. Unlike the Q5 hybrid quattro, there is no 12V starter motor. Engine Control Module J623 sends a start message to DSG Transmission Mechatronic Module J743. Clutch K0 is closed and connects the e-machine rotor to the internal combustion engine's crankshaft. The rotor brings the engine's crankshaft up to starting speed. J623 then enables the ignition and fuel injection and the engine starts.

If it is necessary for the internal combustion engine to start when the vehicle is running in electric-only mode, the torque from the e-machine is increased by the amount necessary to start the internal combustion engine when the clutch closes. This prevents judder. After starting, clutch K0 is opened and the internal combustion engine runs at no load. After the speed of the internal combustion engine has been adapted to that of the e-machine, clutch K0 is closed again.

Audi A3 Owner's Manual

Figure 106

107. Claim 14 of the '157 patent recites the diagnostic system of claim 1, wherein the low oil pressure indicator comprises a lamp.

108. On information and belief, the '157 patent Accused Instrumentalities infringe claim 14 of the '157 patent. The '157 patent Accused Instrumentalities comprise the diagnostic system of claim 1, wherein the low oil pressure indicator comprises a lamp (*Figure 107*).

As shown below, the '157 patent Accused Instrumentalities comprise a lamp to indicate low oil pressure.

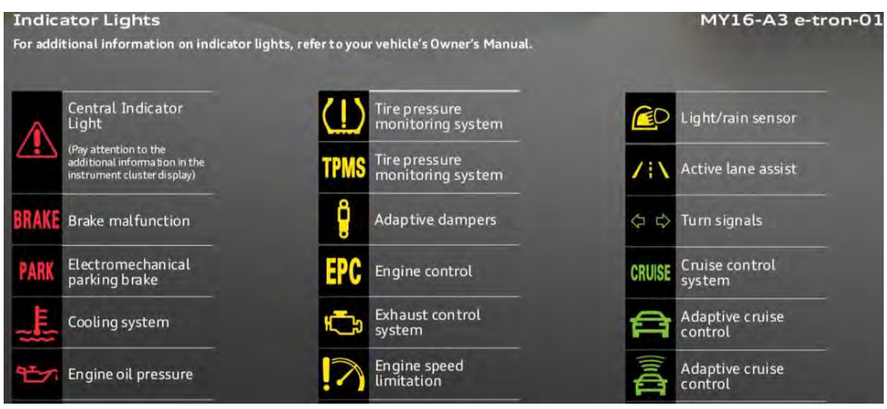

Figure 107

COUNT XV – INFRINGEMENT OF U.S. PATENT NO. 6,736,122

109. The allegations set forth in the foregoing paragraphs 1 through 108 are incorporated into this Fifteenth Claim for Relief.

110. On May 18, 2004, U.S. Patent No. 6,736,122 ("the '122 patent"), entitled "Motor Vehicle Engine Synchronization," was duly and legally issued by the United States Patent and Trademark Office. A true and correct copy of the '122 patent is attached as Exhibit 15.

111. Plaintiff is the assignee and owner of the right, title and interest in and to the '122 patent, including the right to assert all causes of action arising under said patents and the right to any remedies for infringement of them.

112. Upon information and belief, Defendants have directly infringed at least claim 1 of the '122 patent by making, using, selling, importing and/or providing and causing to be used the 2012-2018 Tiguan, 2012-2018 Audi A3, 2012-2018 Audi A4, 2012-2018 Audi A5, 2012-2018 Audi A6, 2016-2018 Audi TT, 2015-2018 Audi S3, 2015-2018 VW Golf, 2012-2018 VW Golf GTI, 2015-2018 VW Golf R, 2015-2018 Golf Sportwagon, 2013-2018 Jetta GLI, 2014-2018 VW Jetta Sedan, 2014-2018 VW Passat, 2012-2017 WV CC, 2012-2018 VW Beetle, 2018 VW Atlas, 2015- 2018 Audi Q3, 2012-2018 Audi Q5, and 2017-2018 Porsche Macan with the EA888 (the "'122 patent Accused Instrumentalities").

113. In particular, claim 1 of the '122 patent recites an internal combustion engine, comprising a number of cylinders, the or each cylinder containing a four-stroke reciprocating piston, an exhaust conduit, one or more engine operating condition sensors including an exhaust gas sensor in the exhaust conduit for measuring the composition of the exhaust gas, a fuel injection system, and an engine management system for controlling the operation of the engine including the fuel injection system and the air/fuel ratio for at least one cylinder, wherein the engine management system contains engine operation data, the engine operation data being related to expected engine operation with engine fueling on the correct stroke and/or engine fueling on an incorrect stroke, and the engine management system is arranged to: a) receive from said sensor(s) respective signal(s); b) oscillate the air/fuel ratio between a relatively rich level

and a relatively lean level, the exhaust gas composition varying depending on the air/fuel ratio; c) reverse the direction of change of the air/fuel ratio when the exhaust gas composition is sensed as being indicative of rich engine operation or lean engine operation; d) determine the temporal characteristics of the oscillation in the air/fuel ratio; and e) determine whether or not the engine is being fueled on the correct stroke by comparing said temporal characteristics with said relevant engine operation data.

114. On information and belief, the ’122 patent Accused Instrumentalities infringe claim 1 of the ’122 patent. The ’122 patent Accused Instrumentalities comprise an internal combustion engine (*Figure 108*), comprising a number of cylinders (*Figure 108*), the or each cylinder containing a four-stroke reciprocating piston (*Figure 108*), an exhaust conduit (*Figure 109*), one or more engine operating condition sensors including an exhaust gas sensor in the exhaust conduit for measuring the composition of the exhaust gas (*Figure 110*), a fuel injection system (*Figures 110-111*), and an engine management system for controlling the operation of the engine including the fuel injection system and the air/fuel ratio for at least one cylinder (*Figure 112*), wherein the engine management system contains engine operation data, the engine operation data being related to expected engine operation with engine fueling on the correct stroke and/or engine fueling on an incorrect stroke (*Figure 112*), and the engine management system (*Figure 112*) is arranged to: a) receive from said sensor(s) respective signal(s) (*Figure 113*); b) oscillate the air/fuel ratio between a relatively rich level and a relatively lean level, the exhaust gas composition varying depending on the air/fuel ratio (*Figure 114*); c) reverse the direction of change of the air/fuel ratio when the exhaust gas composition is sensed as being indicative of rich engine operation or lean engine operation (*Figure 115*); d) determine the temporal characteristics of the oscillation in the air/fuel ratio (*Figure 115*); and e) determine

whether or not the engine is being fueled on the correct stroke by comparing said temporal characteristics with said relevant engine operation data (*Figure 115*).

The ’122 patent Accused Instrumentalities comprise an internal combustion engine, comprising a number of cylinders, the or each cylinder containing a four-stroke reciprocating piston.

The all-new 2018 Volkswagen Tiguan—the second-generation of the vehicle—is powered by the latest version of the EA888 four-cylinder engine, the 2.0L TSI EA888 Gen3 B-Cycle (Budack-cycle, earlier post), coupled with an 8-speed automatic. This is the only engine/transmission combination available in the Tiguan in the US. 4Motion with Active Control all-wheel drive system is optional. The core element of the new engine is a new combustion process combining short intake events with a high compression ratio.

http://www.greencarcongress.com/2017/06/20170627-tiguan.html

Figure 108

As depicted below, the integrated exhaust manifold is part of the exhaust conduit.

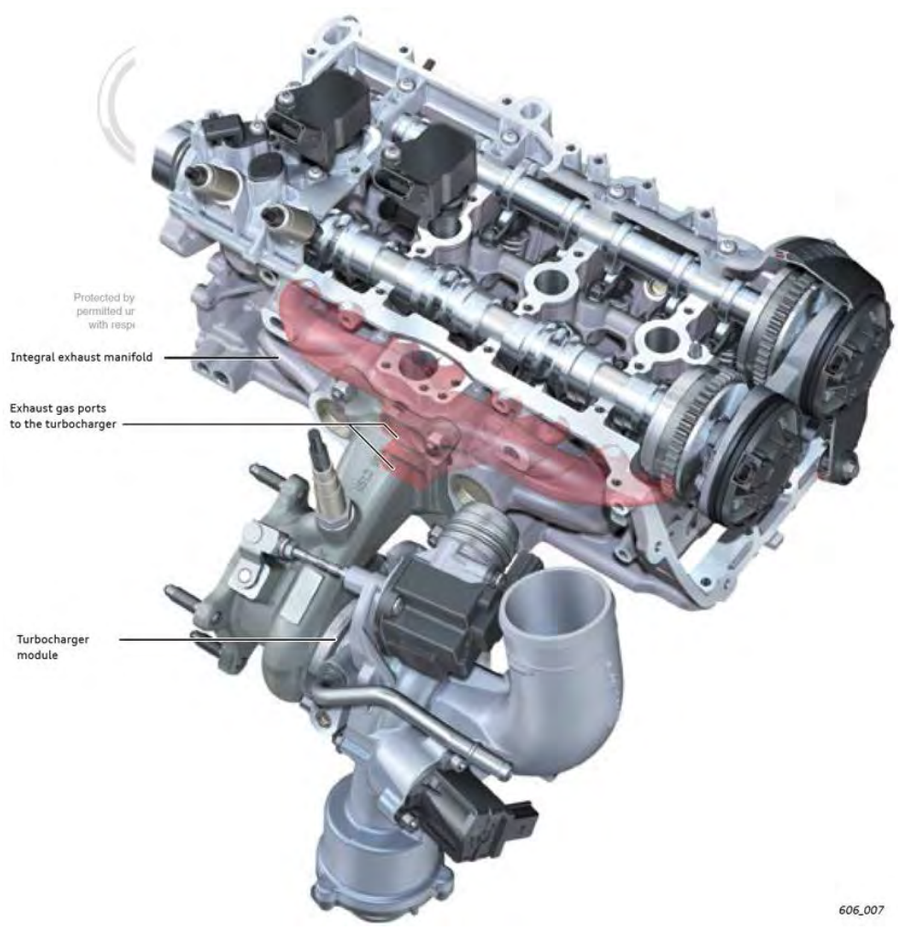

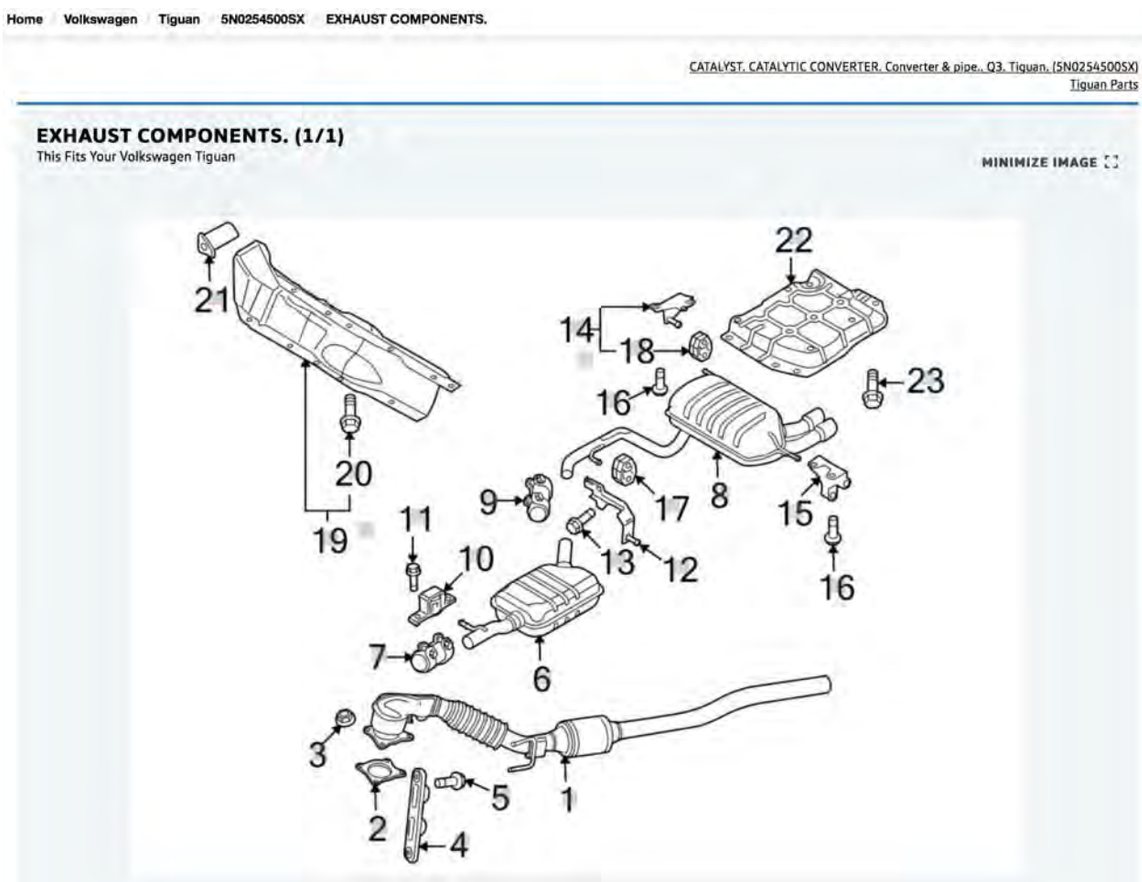

https://parts.vw.com/a/Volkswagen__Tiguan/48838109__5962725/EXHAUST-COMPONENTS/9245245.html

Figure 109

As shown below, the oxygen sensor is an exhaust gas sensor in the exhaust conduit for measuring the composition of the exhaust gas.

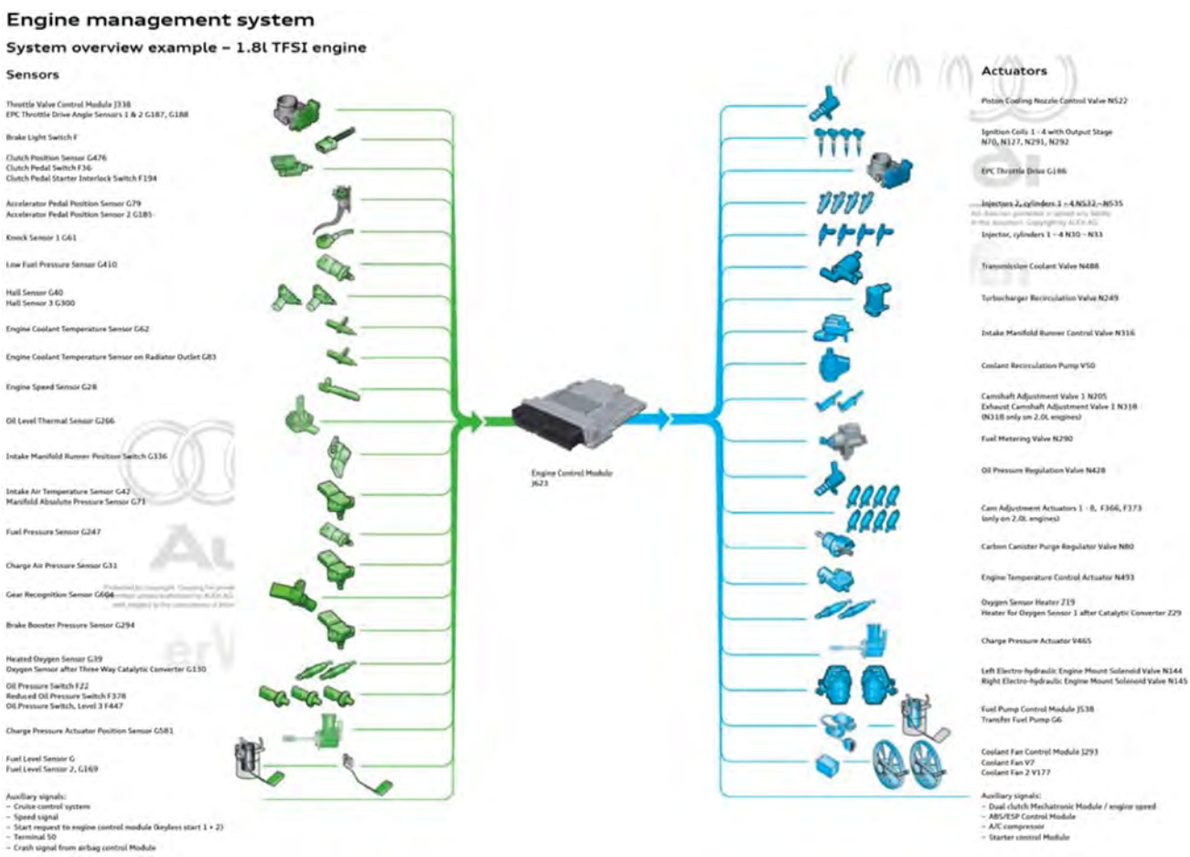

Figure 110

As shown below, the Multiport Fuel Injection System (MFI) is a fuel injection system.

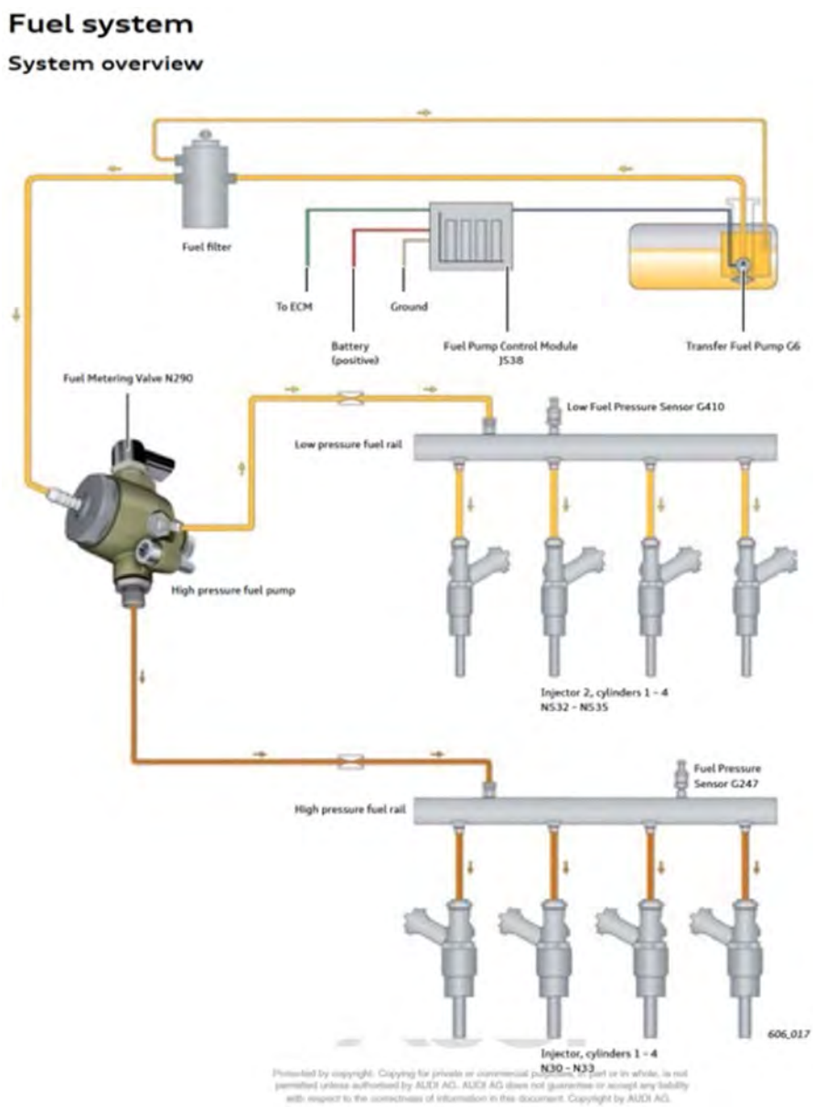

Figure 111

As shown below, the Engine Control Module (ECM) is an engine management system for controlling the operation of the engine including the fuel injection system and the air/fuel ratio for at least one cylinder. The PCM monitors and determines the air/fuel mixture. The sensors provide engine operation data to the engine management system. The engine operation data related to expected engine operation (whether or not proper combustion of the engine is achieved or not) with engine fueling on the correct stroke (i.e. combustion) and/or engine fueling (fuel injection time) on an incorrect stoke (monitored proper combustion) by the Engine Control Module (ECM).

Upon information and belief, information related to the terms “fueling on the correct stroke” or “fueling on an incorrect stroke” is not publicly available, and only in the possession of Volkswagen. However, in my opinion this element is highly likely present in the ’122 patent

Accused Instrumentalities. This information is highly likely to be contained in the software from the ECM.

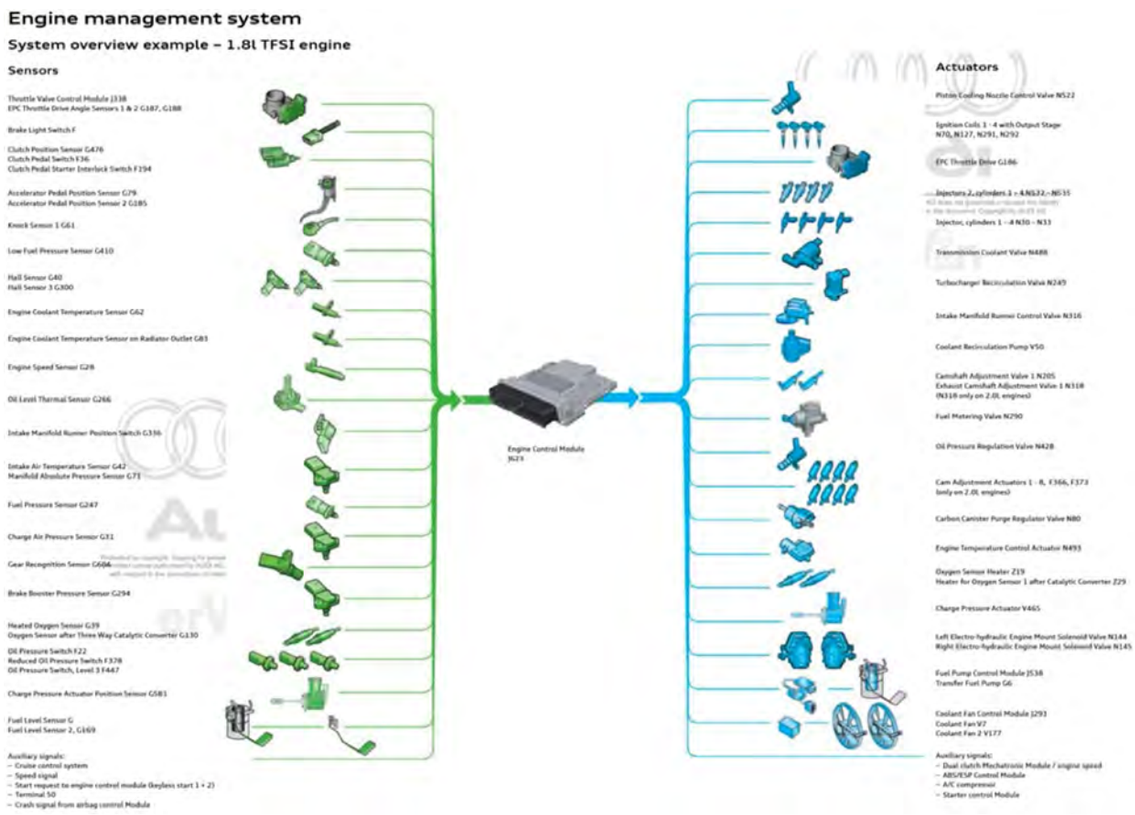

Figure 112

The ’122 patent Accused Instrumentalities comprise an engine management system is arranged to receive from said sensor(s) respective signal(s).

For example, as shown below, the ECM receives signals from the sensors.

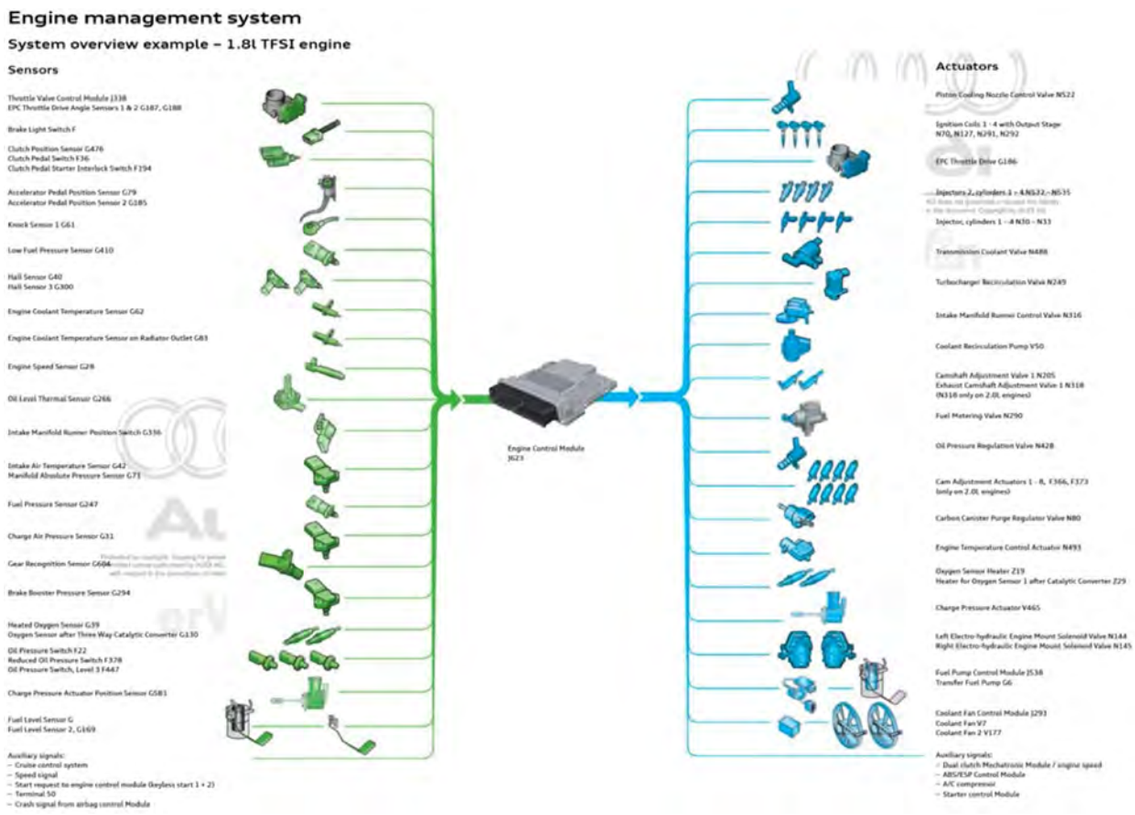

Figure 113

For example, as shown below, the engine management system oscillates the air/fuel ratio (the PCM increases or decrease fuel injection duration) depending on the air/fuel ratio (measured by the oxygen sensor in the exhaust stream) as measured by the exhaust gas oxygen sensors (8 & 9).

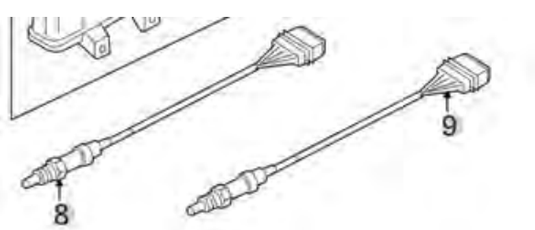

Figure 114

As exemplified below, the PCM reverses the direction of change of the air/fuel ration (from rich to lean, or lean to rich) when the exhaust gas composition sensed (measured by the oxygen sensor in the exhaust stream) as being indicative of rich engine operation or lean engine operation (detects a wide range of air fuel ratios; closed-loop fuel control operation changes direction between rich and lean). When this occurs at too slow of a rate from rich to lean, the PCM sets DTC P0139. The temporal characteristics (the measured amplitude versus the

amplitude of a slow sensor) of the oscillation in the air/fuel ratio (oscillates between rich and lean). The PCM monitors the switch rate frequency of the exhaust gas oxygen sensors between rich and lean and vice versa and is capable of determining when the frequency is not correct.

2015 Volkswagen Tiguan 4Motion (5N2) L4-2.0L Turbo (CCTA)

Vehicle » A L L Diagnostic Trouble Codes (DTC) » Testing and Inspection » P Code Charts » P0139 » Engine Control Module, 2015 MY

ENGINE CONTROL MODULE, 2015 MY

Engine Control Module, 2015 MY

DTC / Description	Monitor Strategy Description	Malfunction Criteria and Threshold Value	Secondary Parameters with Enable Conditions	Monitoring Time Length	MIL Illumination	Component Diagnostic Procedure
			For time > 10.0 Sec General : Engine running Dew point exceeded Lambda set value > 0.995			
P0139 O2 Sensor Circuit Slow Response Bank 1 Sensor 2	O2 Sensor Circuit Slow Response Bank 1 Sensor 2	EWMA filtered transient time at fuel cutoff > 0.0 s In voltage range of 201 - 401 mV Number of checks, >= 3	Rich voltage enable > = 547.9 mV Lean voltage < = 201.2 mV Fuel cutoff active O2S rear ready Modeled exhaust gas temp > 400 °C Front HO2S sensor lambda signal > 2.00 V	100.0 s	1 DCY	Check the Oxygen Sensor 1 After Catalytic Converter (GX7) . Refer to ⇒ 1 Oxygen Sensor 1 After Catalytic Converter (GX7), Checking I.

Upon information and belief, a determination whether or not the engine is being fueled on the correct stroke is determined by the ECM and the MFI wherein temporal characteristics (shown above) are compared with relevant engine operation data (shown above).

Based upon the totality of the foregoing evidence, and based further upon information and belief, the ’122 patent Accused Instrumentalities include “an internal combustion engine, comprising a number of cylinders, the or each cylinder containing a four-stroke reciprocating piston, an exhaust conduit, one or more engine operating condition sensors including an exhaust gas sensor in the exhaust conduit for measuring the composition of the exhaust gas, a fuel injection system, and an engine management system for controlling the operation of the engine including the fuel injection system and the air/fuel ratio for at least one cylinder, wherein the engine management system contains engine operation data, the engine operation data being related to expected engine operation with engine fueling on the correct stroke and/or engine fueling on an incorrect stroke, and the engine management system is arranged to: a) receive from said sensor(s) respective signal(s); b) oscillate the air/fuel ratio between a relatively rich level and a relatively lean level, the exhaust gas composition varying depending on the air/fuel ratio; c) reverse the direction of change of the air/fuel ratio when the exhaust gas composition is sensed as being indicative of rich engine operation or lean engine operation; d) determine the temporal characteristics of the oscillation in the air/fuel ratio; and e) determine whether or not the engine is being fueled on the

correct stroke by comparing said temporal characteristics with said relevant engine operation data."

Figure 115

COUNT XVI – INFRINGEMENT OF U.S. PATENT NO. 6,757,149

115. The allegations set forth in the foregoing paragraphs 1 through 114 are incorporated into this Sixteenth Claim for Relief.

116. On Jun. 29, 2004, U.S. Patent No. 6,757,149 ("the '149 patent"), entitled "Method for Controlling Fuel Injector Valve Solenoid Current," was duly and legally issued by the United States Patent and Trademark Office. A true and correct copy of the '149 patent is attached as Exhibit 16.

117. Michigan Motor is the assignee and owner of the right, title and interests in and to the '149 patent, including the right to assert all causes of action arising under said patents and the right to any remedies for infringement of them.

118. Upon information and belief, Defendants have directly infringed at least claim 1 of the '149 patent by making, using, selling, importing and/or providing and causing to be used at least the 2013-2017 Volkswagen Jetta Hybrid and 2016-2018 Audi A3 e-tron Sportback (the "'149 patent Accused Instrumentalities").

119. In particular, claim 1 of the '149 patent recites a method of controlling a fuel injector valve solenoid comprising: generating a set-point signal to model a desired current profile flowing through the valve solenoid; providing a current controller adapted to regulate the current flowing through the valve solenoid; and regulating the current flowing through the valve solenoid such that the current flowing through the valve solenoid closely matches the set point signal.

120. On information and belief, the ’149 patent Accused Instrumentalities infringe claim 1 of the ’149 patent. The ’149 patent Accused Instrumentalities practice a method of controlling a fuel injector valve solenoid (*Figure 116*) comprising: generating a set-point signal to model a desired current profile flowing through the valve solenoid (*Figure 117*); providing a current controller adapted to regulate the current flowing through the valve solenoid (*Figure 117*); and regulating the current flowing through the valve solenoid such that the current flowing through the valve solenoid closely matches the set point signal (*Figure 117*).

For example, as shown below, the Engine Control Module (ECM) are microcontrollers which practice a method of controlling a fuel injector valve solenoid.

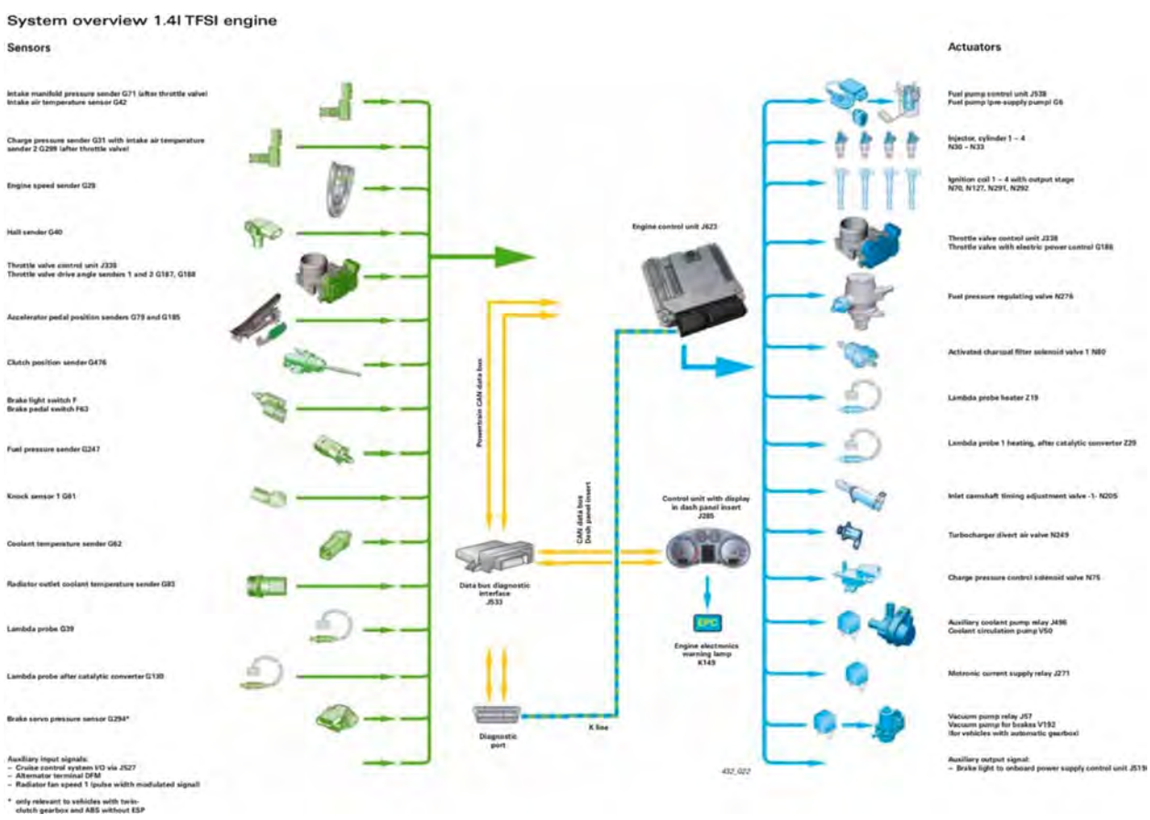

Audi 1.4L TFSI SSP 432

Figure 116

For example, as shown below, a set point signal is generated by the ECM to model a desired current profile flowing through the valve solenoid with a peak of up to 12 amperes and a holding current of 2.6 amperes.

The solenoid injectors are opened by the engine control unit with a voltage of 65V. Electrical current peaks of up to 12 amperes can occur. The holding current is approx. 2.6 amperes.
The injectors are attached to the base of the intake manifold, in which the fuel distributor is also integrated.

Audi 1.4L TFSI SSP 432

Upon information and belief a current controller associated with the ECM and the valve solenoid regulates the current flowing through the valve solenoid such that the current flowing through the valve solenoid closely matches the set point signal.

Figure 117

COUNT XVII – INFRINGEMENT OF U.S. PATENT NO. 7,116,081

121. The allegations set forth in the foregoing paragraphs 1 through 120 are incorporated into this Seventeenth Claim for Relief.

122. On Oct. 3, 2006, U.S. Patent No. 7,116,081 ("the '081 patent"), entitled "Thermal Protection Scheme for High Output Vehicle Alternator," was duly and legally issued by the United States Patent and Trademark Office. A true and correct copy of the '081 patent is attached as Exhibit 17.

123. Michigan Motor is the assignee and owner of the right, title and interests in and to the '081 patent, including the right to assert all causes of action arising under said patents and the right to any remedies for infringement of them.

124. Upon information and belief, Defendants have directly infringed at least claim 1 of the ’081 patent by making, using, selling, importing and/or providing and causing to be used the 2013-2017 Volkswagen Jetta Hybrid and 2016-2018 Audi A3 e-tron Sportback (the “’081 patent Accused Instrumentalities”).

125. In particular, claim 1 of the ’081 patent recites a thermal protection system for a high output vehicle alternator, said system comprising: a duty cycle control system; an alternator having a temperature limit and at least one rotor speed limit, said alternator operably connected to said duty cycle control system; a field current supply to said alternator; an alternator rotor speed sensor in communication with said duty cycle control system for determining an alternator rotor speed; and an alternator temperature sensor in communication with said duty cycle control system, for determining an alternator temperature, wherein said duty cycle control system regulates said field current supply to said alternator based on said alternator rotor speed and said alternator temperature in order to maintain said alternator temperature below said temperature limit and prevent excess heat from being generated.

126. On information and belief, the ’081 patent Accused Instrumentalities infringe claim 1 of the ’081 patent. The ’081 patent Accused Instrumentalities comprise a thermal protection system for a high output vehicle alternator (*Figure 118-119*), said system comprising: a duty cycle control system (*Figure 120*); an alternator having a temperature limit and at least one rotor speed limit, said alternator operably connected to said duty cycle control system (*Figure 121*); a field current supply to said alternator (*Figure 122*); an alternator rotor speed sensor in communication with said duty cycle control system for determining an alternator rotor speed (*Figure 123*); and an alternator temperature sensor in communication with said duty cycle control system, for determining an alternator temperature, wherein said duty cycle control system regulates said field current supply to said alternator based on said alternator rotor speed and said

alternator temperature in order to maintain said alternator temperature below said temperature limit and prevent excess heat from being generated (*Figure 123*).

The drive motor serves as a high output alternator during regeneration in generator mode.

There exists a Drive Motor Temperature Sensor G712 and Drive Motor Rotor Position Sensor G713 and DTCs P0A2B, P0A2C and P0A2D that show a monitoring of an alternator thermal protection system.

Overview

Power transmission is provided by the front wheel drive, six-speed 0DD S tronic (DSG) transmission.

The integrated Electro-drive Drive Motor V141 (e-machine) is a permanently excited synchronous machine that develops up to 102 hp (75 kW) of power. It is capable of delivering approximately 243 lb ft (330 Nm) of torque to the transmission. V141 provides electric-only drive-away from standstill and electric-only driving as well as starting the internal combustion engine via clutch K0. (see page 10).

If necessary, in Boost mode, the (e-machine) and internal combustion engine are connected via clutch K0 and deliver the maximum system power to the transmission.

In generator mode, V141 is driven by the internal combustion engine using the vehicle's propulsion energy (recuperation) or through the closed K0 clutch. The electric drive motor supplies power to the entire vehicle.

Clutches K1 and K2 (see page 16, page 17) transfer the entire power generated by both drives to sub-gearboxes 1 and 2.

All 3 of clutches K0, K1 and K2 are wet-type clutches and are controlled by the DSG Transmission Mechatronic Module J743.

The transmission has only one ATF supply. Approximately 7.3 qt (7 l) of ATF supply both the transmission hydraulics and the sub-gearbox. Both sub-transmissions form the manual transmission of the transmission.

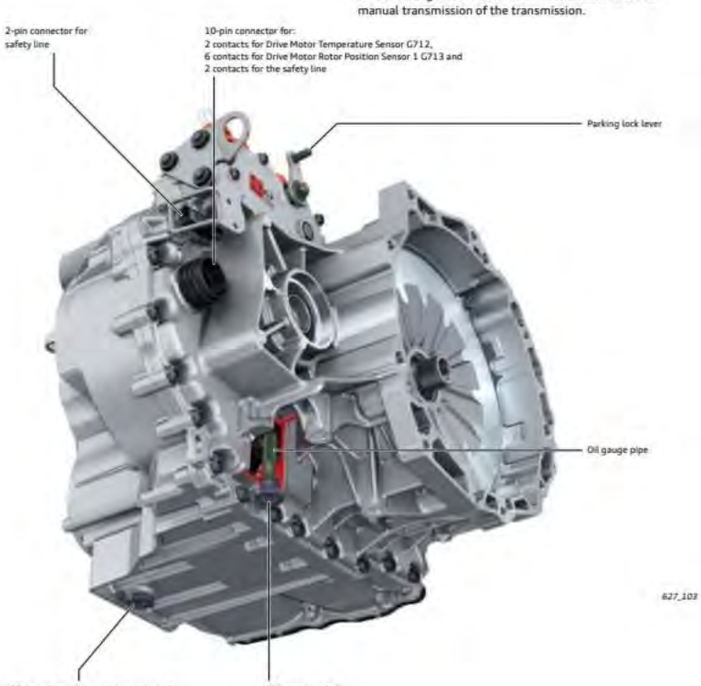

12

Figure 118

P0A2B	Drive Motor "A" Temperature Sensor Circuit Range/ Performance	• Stator temperature - average rating from IGBT-phase temperatures > 23 – 50 K • Stator temperature jump to high > 12 K	• Engine off time > 6.0 hr • System state drive	• Debounce time = 2,500.0 ms	• 2 DCY • Once / DCY
P0A2C	Drive Motor "A" Temperature Sensor Circuit Low	• Stator temperature too high > + 196° C		• Debounce time = 800.0 ms	• 2 DCY • Continuous
P0A2D	Drive Motor "A" Temperature Sensor Circuit High	• Stator temperature too low < -50° C		• Debounce time = 800.0 ms	• 2 DCY • Continuous
P0A3F	Drive Motor "A" Position Sensor Circuit	• Internal fault detected true none		• Continuous	• 0 DCY • Continuous
		• Difference between current and previous calculated Position sensor angle is greater than > 48.4°		• Continuous	
		• Difference between Position sensor frequency and from angle calculated frequency is greater than > 200 Hz		• Debounce time = 50.0 ms	

Figure 119

The DTC P0A3F implies a duty cycle control system in its reference to frequency. The captured code from a live vehicle shows duty cycle control for battery charging.

P0A2B	Drive Motor "A" Temperature Sensor Circuit Range/ Performance	• Stator temperature - average rating from IGBT-phase temperatures > 23 – 50 K • Stator temperature jump to high > 12 K	• Engine off time > 6.0 hr • System state drive	• Debounce time = 2,500.0 ms	• 2 DCY • Once / DCY
P0A2C	Drive Motor "A" Temperature Sensor Circuit Low	• Stator temperature too high > + 196° C		• Debounce time = 800.0 ms	• 2 DCY • Continuous
P0A2D	Drive Motor "A" Temperature Sensor Circuit High	• Stator temperature too low < -50° C		• Debounce time = 800.0 ms	• 2 DCY • Continuous
P0A3F	Drive Motor "A" Position Sensor Circuit	• Internal fault detected true none		• Continuous	• 0 DCY • Continuous
		• Difference between current and previous calculated Position sensor angle is greater than > 48.4°		• Continuous	
		• Difference between Position sensor frequency and from angle calculated frequency is greater than > 200 Hz		• Debounce time = 50.0 ms	

C6 Batt. Chrg.

Block

Code:

```
;SW:5QE-915-682-AF   HW:5QE-915-682-AF ---  Batt. Chrg.
;Component:OBC KOSTAL    H31 4013, Coding:115068223000
;EV_OBCSinglPhaseKLOMQB12P,001001,EV_OBCSinglPhaseKLOMQB12P.rod
;Thursday,02,August,2018,08:21:18:50490
;VCDS Version: Release 18.2.1 (x64)  Data version: 20180518 DS287.1
;VCID: 116A6A14C0AC40CCB8-8044

Group,Description,Actual
IDE00019,Voltage terminal 30,13.0, V
IDE00030,Status of actuator test,not active,
IDE00322,Status of basic setting,was not yet started,
IDE00323,Security Access: Number of invalid keys,0,
IDE00637,Intermediate circuit voltage,403.4, V
IDE00767,No. of unscheduled ECU resets,00,
IDE02486,Data logger triggering,not active,
IDE06805,Status of voltage freedom,High voltage power off not recognized,
IDE06954,HV charge current: act. value,9, A
IDE06955-ENG114223,HV charge current: spec. value-Charger_HV_current_commanded_value,8.8, A
IDE07975,Remote control for charge function of H-V battery,not activated,
IDE08421-IDE05431,Power outlet A for battery charging-Locking for H-V charge plug,locked,
IDE08421-MAS07220,Power outlet A for battery charging-Status connect. recognition,present,
IDE08421-MAS07221,Power outlet A for battery charging-Connector locking requirement,00000000 ,
IDE08421-MAS07222,Power outlet A for battery charging-Connector unlocking requirement,00000000 ,
IDE08421-MAS07223,Power outlet A for battery charging-Max. current of charge connector,20, A
IDE08421-MAS07565,Power outlet A for battery charging-Activation charge cover lock charge socket A,not requested,
IDE08421-MAS07567,Power outlet A for battery charging-Status charge cover lock charge socket A,not locked,
IDE08421-MAS10983,Power outlet A for battery charging-Activation charge cover unlock charge socket A,not requested,
IDE08421-MAS12565,Power outlet A for battery charging-Charge socket temperature sensor AC,27.0, °C
IDE08421-MAS12566,Power outlet A for battery charging-Charge sensor temperature sensor DC,0.0, °C
IDE08422-IDE05431,Power outlet B for battery charging-Locking for H-V charge plug,not locked,
IDE08422-MAS07220,Power outlet B for battery charging-Status connect. recognition,Not Present,
```

C6 Batt. Chrg.

Block

Code:

```
IDE08422-MAS07220,Power outlet B for battery charging-Status connect. recognition,Not Present,
IDE08422-MAS07221,Power outlet B for battery charging-Connector locking requirement,00000000 ,
IDE08422-MAS07222,Power outlet B for battery charging-Connector unlocking requirement,00000000 ,
IDE08422-MAS07223,Power outlet B for battery charging-Max. current of charge connector,0, A
IDE08422-MAS07224,Power outlet B for battery charging-Temp. of charge socket,27.0, °C
IDE08422-MAS07566,Power outlet B for battery charging-Activation charge cover lock charge socket B,not requested,
IDE08422-MAS07568,Power outlet B for battery charging-Status: chg. cover lock. device: chg. socket B,not locked,
IDE08423-MAS02949,Control signal for power outlet A for battery charging-Frequency,1000, Hz
IDE08423-MAS02952,Control signal for power outlet A for battery charging-Control voltage,5759, mV
IDE08423-MAS03873,Control signal for power outlet A for battery charging-Duty cycle,33.5, %
IDE08423-MAS04136,Control signal for power outlet A for battery charging-Current,20.2, A
IDE08423-MAS07262,Control signal for power outlet A for battery charging-Signal recognized,00000001 ,
IDE08424-MAS02949,Control signal for power outlet B for battery charging-Frequency,0, Hz
IDE08424-MAS02952,Control signal for power outlet B for battery charging-Control voltage,0, mV
IDE08424-MAS03873,Control signal for power outlet B for battery charging-Duty cycle,0.0, %
IDE08424-MAS04136,Control signal for power outlet B for battery charging-Current,0.0, A
IDE08424-MAS07262,Control signal for power outlet B for battery charging-Signal recognized,00000000 ,
IDE08425-MAS07225,Indicator lamps for power outlet A for battery charging-Status: indicator light 1,OFF,
IDE08425-MAS07226,Indicator lamps for power outlet A for battery charging-Status: indicator light 2,Blinking,
IDE08425-MAS07227,Indicator lamps for power outlet A for battery charging-Status: indicator light 3,OFF,
IDE08425-MAS07228,Indicator lamps for power outlet A for battery charging-Intensity: indicator light 1,100, %
IDE08425-MAS07229,Indicator lamps for power outlet A for battery charging-Intensity: indicator light 2,100, %
IDE08425-MAS07230,Indicator lamps for power outlet A for battery charging-Intensity: indicator light 3,100, %
IDE08425-MAS07231,Indicator lamps for power outlet A for battery charging-Period duration: indicator light 1,2000, ms
IDE08425-MAS07232,Indicator lamps for power outlet A for battery charging-Period duration: indicator light 2,2000, ms
IDE08425-MAS07233,Indicator lamps for power outlet A for battery charging-Period duration: indicator light 3,2000, ms
IDE08425-MAS07582,Indicator lamps for power outlet A for battery charging-Intensity: activation 4,0, %
IDE08425-MAS07590,Indicator lamps for power outlet A for battery charging-Period duration: activation 4,0, ms
IDE08425-MAS13012,Indicator lamps for power outlet A for battery charging-Status: indicator light 4,OFF,
IDE08426-MAS07225,Indicator lamps for power outlet B for battery charging-Status: indicator light 1,OFF,
IDE08426-MAS07226,Indicator lamps for power outlet B for battery charging-Status: indicator light 2,OFF,
IDE08426-MAS07227,Indicator lamps for power outlet B for battery charging-Status: indicator light 3,OFF,
```

C6 Batt. Chrg.

Block

Code:

```
IDE08426-MAS07227,Indicator lamps for power outlet B for battery charging-Status: indicator light 3,OFF,
IDE08426-MAS07228,Indicator lamps for power outlet B for battery charging-Intensity: indicator light 1,100, %
IDE08426-MAS07229,Indicator lamps for power outlet B for battery charging-Intensity: indicator light 2,100, %
IDE08426-MAS07230,Indicator lamps for power outlet B for battery charging-Intensity: indicator light 3,100, %
IDE08426-MAS07231,Indicator lamps for power outlet B for battery charging-Period duration: indicator light 1,2000, ms
IDE08426-MAS07232,Indicator lamps for power outlet B for battery charging-Period duration: indicator light 2,2000, ms
IDE08426-MAS07233,Indicator lamps for power outlet B for battery charging-Period duration: indicator light 3,2000, ms
IDE08426-MAS07582,Indicator lamps for power outlet B for battery charging-Intensity: activation 4,0, %
IDE08426-MAS07590,Indicator lamps for power outlet B for battery charging-Period duration: activation 4,0, ms
IDE08426-MAS13012,Indicator lamps for power outlet B for battery charging-Status: indicator light 4,OFF,
IDE08427-MAS07237,Statistics of power outlet A for battery charging-No. of connections,1485,
IDE08427-MAS07238,Statistics of power outlet A for battery charging-No. of lockings,1824,
IDE08428-MAS07237,Statistics of power outlet B for battery charging-No. of connections,0,
IDE08428-MAS07238,Statistics of power outlet B for battery charging-No. of lockings,0,
IDE08430,Cause of cancellation of charge procedure,not active,
IDE08431,Remaining time for charge procedure,40, min
IDE08432-MAS02158,Button for battery charging-Actuation condition,not activated,
IDE08432-MAS04737,Button for battery charging-Indicator lamp,On,
IDE08505-MAS07220,Power outlet for quick charging of HV battery-Status connect. recognition,present,
IDE08638-MAS04721,SOC limits: set by customer-Minimum charge level,1, %
IDE08638-MAS04722,SOC limits: set by customer-Maximum charge level,0, %
IDE08639,max. loading power,3300, W
IDE08640,Spec. mode: load mgmnt.,AC main charge,
IDE08649-IDE06971,Ready to charge-Operational readiness in H-V system,active,
IDE08649-MAS07214,Ready to charge-Status charge readiness: engine,ready for operation,
IDE08649-MAS07215,Ready to charge-Status charge readiness charge mngmt.,ready for operation,
IDE08657-MAS01424,Current at DC charg. stat.-max.value,0, A
IDE08657-MAS07236,Current at DC charg. stat.-Act.val.,0, A
IDE08658-MAS01424,Voltage at DC charg. stat.-max.value,0, V
IDE08658-MAS07236,Voltage at DC charg. stat.-Act.val.,0, V
IDE08659-MAS07237,Statistic of DC charger for battery charging-No. of connections,0,
IDE08659-MAS07238,Statistic of DC charger for battery charging-No. of lockings,0,
```

C6 Batt. Chrg.

Block

Code:

```
IDE08659-MAS07238,Statistic of DC charger for battery charging-No. of lockings,0,
IDE08659-MAS07239,Statistic of DC charger for battery charging-No. of charging process.,0,
IDE08677-MAS07258,Load mode-Stat.: charge mode,AC main charge,
IDE08677-MAS07259,Load mode-Chg. type,Imm. charg.,
IDE08717,Status mains voltage,present,
IDE08718-MAS06699,Chademo version-Vehicle,0,
IDE08718-MAS07395,Chademo version-Chg. statn.,0,
IDE08719-IDE08720,Values from battery mgmt system-Current condition of battery mgmt. system,External Charging,
IDE08719-MAS01420,Values from battery mgmt system-Limit for charge current,N/A---,
IDE08719-MAS04059,Values from battery mgmt system-Battery temperature,30.0, °C
IDE08719-MAS07289,Values from battery mgmt system-A/C requirement,Med. cooling reqmnt.,
IDE08719-MAS07396,Values from battery mgmt system-Act. voltage HV battery,N/A---,
IDE08719-MAS07397,Values from battery mgmt system-Act. current HV battery,N/A---,
IDE08719-MAS07407,Values from battery mgmt system-Max. battery charging voltage,N/A---,
IDE08751-MAS02158,Load button-Actuation condition,not activated,
IDE08751-MAS04737,Load button-Indicator lamp,OFF,
IDE08751-MAS07596,Load button-Locating illum. charge button,OFF,
IDE08938,Chrgr cooling reqrmnt,Med. cooling reqmnt.,
IDE08985,AC line current: actual val,15.0, A
IDE08986,AC line voltage: actual val,226, V
IDE09039,HV charger - current output voltage,368, V
IDE09057,HV batte charge state,74.5, %
IDE11570-ENG30068,Activation periods of charging cover locking-raw_value_in_develop_by_ODXauthor,00,
IDE11571-ENG30068,Voltage terminal 30 battery data module-raw_value_in_develop_by_ODXauthor,A3,
MAS00464-MAS00106,Standard - ambient data 1-Year,2000,
MAS00464-MAS00107,Standard - ambient data 1-Month,1,
MAS00464-MAS00108,Standard - ambient data 1-Day,2,
MAS00464-MAS00109,Standard - ambient data 1-Hours,0,
MAS00464-MAS00110,Standard - ambient data 1-Minutes,2,
MAS00464-MAS00111,Standard - ambient data 1-Seconds,40,
MAS00464-MAS00468,Standard - ambient data 1-Unlearning counter,147,
MAS00464-MAS00711,Standard - ambient data 1-Odometer reading,30904, km
```

C6 Batt. Chrg.

Block

Code:

```
MAS00464-MAS00711,Standard - ambient data 1-Odometer reading,30904, km
MAS06335-ENG30068,Voltage low voltage side DCDC - converter-raw_value_in_develop_by_ODXauthor,B4,
MAS07392-MAS07393,Control signal DC charge-Control signal 1,00000000 ,
MAS07392-MAS07394,Control signal DC charge-Control signal 2,00000001 ,
MAS07396-ENG30068,Act. voltage HV battery-raw_value_in_develop_by_ODXauthor,05 D5,
MAS07407-ENG30068,Max. battery charging voltage-raw_value_in_develop_by_ODXauthor,01 90,
MAS07558,Spec. op. condition charge unit,AC main charge,
MAS07559,Act.. op. condition charge unit,AC main charge,
MAS07563,Function limitation charging due to temp. charge socket,not active,
MAS07564,Function limitation charging due to temp. charge unit,not active,
MAS12397-ENG30068,Number of lockings: charge cover A-raw_value_in_develop_by_ODXauthor,14 70,
ENG125865,AC_maximum_input_current_value,16.0, A
ENG125867,AC_network_frequency,50.0, Hz
ENG125873,charger_coolant_temperature,40, °C
ENG123145-ENG123175,Charging_Connector_Locking_Parameter-delocking_request_time_CAN,0, ms
ENG123145-ENG123173,Charging_Connector_Locking_Parameter-delocking_time_lag,0, ms
ENG123145-ENG123174,Charging_Connector_Locking_Parameter-locking_delay_time,0, ms
ENG123145-ENG123176,Charging_Connector_Locking_Parameter-locking_time_lag,0, ms
ENG123142,charging_process_request,AC_Charging_Request,
ENG123144,charging_status,Charging,
ENG125862,current_voltage_protection,not active,
ENG123148,ekk_air_condition_current,0.0, A
ENG125863,error_status_battery_charger,not active,
ENG126556,gate_driver_voltage_DCDC,15.9, V
ENG126555,gate_driver_voltage_PFC,15.9, V
ENG126544,high_voltage_activation_request,requested,
ENG123143,max_HV_DC_voltage_obc,394, V
ENG123146,permission_to_charge_lm,00000000 ,
ENG125870,power_efficiency,95.0, %
ENG125869,power_loss_battery_charger,140, W
ENG123147,ptc_heater_current,0.0, A
ENG07647,temperature_battery_charger_PFC_coil,50, °C
```

```
ENG07647,temperature_battery_charger_PFC_coil,50, °C
ENG125871,temperature_battery_charger_system_board,61, °C
ENG125872,temperature_DCDC_coil,45, °C
ENG125876,temperature_DCDC_powerline,51, °C
ENG125864,warning_status_battery_charger,no warning,

Elapsed Time: 00:07
```

https://forums.ross-tech.com/showthread.php?15151-2017-Audi-A3-1-4-TFSI-E-TRON-CUKB-(Germany)/page3

Upon information and belief, the element "duty cycle control system" is present in the '081 patent Accused Instrumentalities. As shown above, duty cycle control is used in charging the battery and is referenced in the DTC. This information is contained in the C6 Battery Charging Module software and hardware architecture.

Figure 120

As shown below, the ’081 patent Accused Instrumentalities comprise a method for an alternator (Electro-drive Drive Motor V141 in generator mode) having a temperature limit (Drive Motor Temperature Sensor G712) and at least one rotor speed limit (Drive Motor Rotor Position Sensor G713) connected to a duty cycle control system (Electro Drive Control Module J841) that uses pulse width modulated signals. Temperature limits are detailed in the Diagnostic Trouble Codes (DTCs P02AC & P02AD) also shown below.

Drive Motor Inverter A37

The drive motor inverter A37 is both a DC/AC converter and an AC/DC converter.

Electro-drive Drive Motor V141 (e-machine) as motor

In electric driving mode A37 converts the AC voltage of the Hybrid Battery Unit AX1 to a 3-phase AC voltage. The voltage is converted by pulse width modulation. There are six transistors in A37. Two for each of the three phases, U, V, and W. Each phase has a separate transistor for positive and negative.

When activated, the corresponding potential is connected. The transistors are activated by Electric Drive Control Module J841 using pulse width modulated signals. RPM is regulated by changing the frequency, and the torque of V141 by changing the activation times of the individual pulse widths.

Electro-drive Drive Motor V141 in generator mode

If V141 is running in generator mode A37 converts the generated 3-phase AC voltage to a 352 V DC voltage. The high voltage system is supplied with the generated DC voltage and the 12-volt electrical system is supplied through Voltage Converter A19.

33

Overview

Power transmission is provided by the front wheel drive, six-speed 0DD S tronic (DSG) transmission.

The integrated Electro-drive Drive Motor V141 (e-machine) is a permanently excited synchronous machine that develops up to 102 hp (75 kW) of power. It is capable of delivering approximately 243 lb ft (330 Nm) of torque to the transmission. V141 provides electric-only drive-away from standstill and electric-only driving as well as starting the internal combustion engine via clutch K0. (see page 10).

If necessary, in Boost mode, the (e-machine) and internal combustion engine are connected via clutch K0 and deliver the maximum system power to the transmission.

In generator mode, V141 is driven by the internal combustion engine using the vehicle's propulsion energy (recuperation) or through the closed K0 clutch. The electric drive motor supplies power to the entire vehicle.

Clutches K1 and K2 (see page 16, page 17) transfer the entire power generated by both drives to sub-gearboxes 1 and 2.

All 3 of clutches K0, K1 and K2 are wet-type clutches and are controlled by the DSG Transmission Mechatronic Module J743.

The transmission has only one ATF supply. Approximately 7.3 qt (7 l) of ATF supply both the transmission hydraulics and the sub-gearbox. Both sub-transmissions form the manual transmission of the transmission.

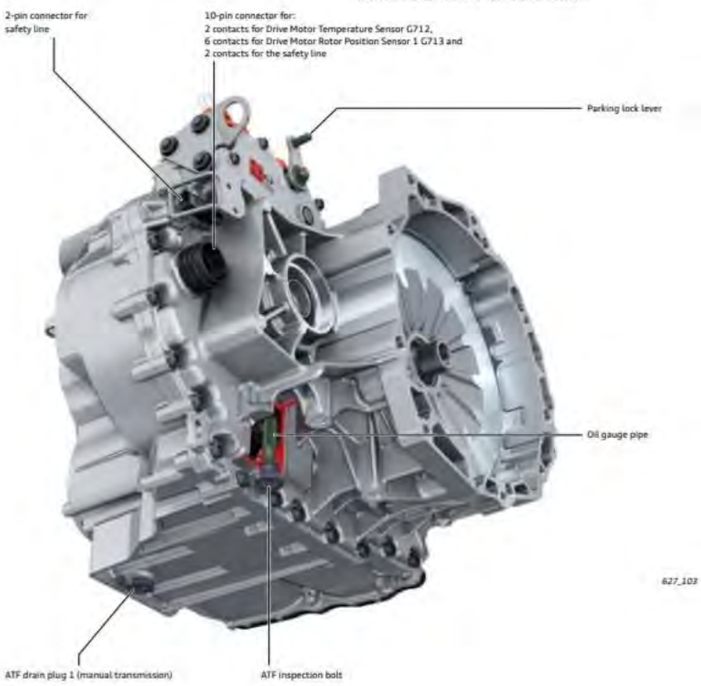

P0A2B	Drive Motor "A" Temperature Sensor Circuit Range/ Performance	• Stator temperature - average rating from IGBT-phase temperatures > 23 – 50 K • Stator temperature jump to high > 12 K	• Engine off time > 6.0 hr • System state drive	• Debounce time = 2,500.0 ms	• 2 DCY • Once / DCY
P0A2C	Drive Motor "A" Temperature Sensor Circuit Low	• Stator temperature too high > + 196° C		• Debounce time = 800.0 ms	• 2 DCY • Continuous
P0A2D	Drive Motor "A" Temperature Sensor Circuit High	• Stator temperature too low < -50° C		• Debounce time = 800.0 ms	• 2 DCY • Continuous
P0A3F	Drive Motor "A" Position Sensor Circuit	• Internal fault detected true none		• Continuous	• 0 DCY • Continuous
		• Difference between current and previous calculated Position sensor angle is greater than > 48.4°		• Continuous	
		• Difference between Position sensor frequency and from angle calculated frequency is greater than > 200 Hz		• Debounce time = 50.0 ms	

Figure 121

As shown below, the 3-phase power cable supplies the "field" current to the SMG (alternator).

Upon information and belief, the Electro Drive Motor V141 in generator mode (alternator) Drive Motor Rotor Position Sensor G713 (rotor speed sensor) is in communication with the Electric Drive Control Module J841 which supplies the field current to the Electro Drive Motor V141 when running in generator mode.

Drive Motor Inverter A37

The drive motor inverter A37 is both a DC/AC converter and an AC/DC converter.

Electro-drive Drive Motor V141 (e-machine) as motor

In electric driving mode A37 converts the AC voltage of the Hybrid Battery Unit AX1 to a 3-phase AC voltage. The voltage is converted by pulse width modulation. There are six transistors in A37. Two for each of the three phases, U, V, and W. Each phase has a separate transistor for positive and negative.

When activated, the corresponding potential is connected. The transistors are activated by Electric Drive Control Module J841 using pulse width modulated signals. RPM is regulated by changing the frequency, and the torque of V141 by changing the activation times of the individual pulse widths.

Electro-drive Drive Motor V141 in generator mode

If V141 is running in generator mode A37 converts the generated 3-phase AC voltage to a 352 V DC voltage. The high voltage system is supplied with the generated DC voltage and the 12-volt electrical system is supplied through Voltage Converter A19.

Figure 122

As shown below, the Electro Drive Motor V141 in generator mode (alternator) Drive Motor Rotor Position Sensor G713 (rotor speed sensor) is in communication with the Electric Drive Control Module J841 (duty cycle control system) for determining the Electro Drive Motor V141 (alternator rotor) speed.

Moreover, as exemplified below, the ’081 patent Accused Instrumentalities comprise a method for an alternator temperature sensor (Drive Motor Temperature Sensor G712) in communication with said duty cycle control system (Electro Drive Control Module J841), for determining an alternator temperature, wherein said duty cycle control system regulates said field current supply to said alternator (Electro-drive Drive Motor V141 in generator mode) based on said alternator temperature in order to maintain said alternator temperature below said temperature limit and prevent excess heat from being generated. The temperature limits for said alternator are detailed in the Diagnostic Trouble Codes (DTCs P02AC & P02AD) shown above.

Drive Motor Inverter A37

The drive motor inverter A37 is both a DC/AC converter and an AC/DC converter.

Electro-drive Drive Motor V141 (e-machine) as motor

In electric driving mode A37 converts the AC voltage of the Hybrid Battery Unit AX1 to a 3-phase AC voltage. The voltage is converted by pulse width modulation. There are six transistors in A37. Two for each of the three phases, U, V, and W. Each phase has a separate transistor for positive and negative.

When activated, the corresponding potential is connected. The transistors are activated by Electric Drive Control Module J841 using pulse width modulated signals. RPM is regulated by changing the frequency, and the torque of V141 by changing the activation times of the individual pulse widths.

Electro-drive Drive Motor V141 in generator mode

If V141 is running in generator mode A37 converts the generated 3-phase AC voltage to a 352 V DC voltage. The high voltage system is supplied with the generated DC voltage and the 12-volt electrical system is supplied through Voltage Converter A19.

33

Overview

Power transmission is provided by the front wheel drive, six-speed 0DD S tronic (DSG) transmission.

The integrated Electro-drive Drive Motor V141 (e-machine) is a permanently excited synchronous machine that develops up to 102 hp (75 kW) of power. It is capable of delivering approximately 243 lb ft (330 Nm) of torque to the transmission. V141 provides electric-only drive-away from standstill and electric-only driving as well as starting the internal combustion engine via clutch K0. (see page 10).

If necessary, in Boost mode, the (e-machine) and internal combustion engine are connected via clutch K0 and deliver the maximum system power to the transmission.

In generator mode, V141 is driven by the internal combustion engine using the vehicle's propulsion energy (recuperation) or through the closed K0 clutch. The electric drive motor supplies power to the entire vehicle.

Clutches K1 and K2 (see page 16, page 17) transfer the entire power generated by both drives to sub-gearboxes 1 and 2.

All 3 of clutches K0, K1 and K2 are wet-type clutches and are controlled by the DSG Transmission Mechatronic Module J743.

The transmission has only one ATF supply. Approximately 7.3 qt (7 l) of ATF supply both the transmission hydraulics and the sub-gearbox. Both sub-transmissions form the manual transmission of the transmission.

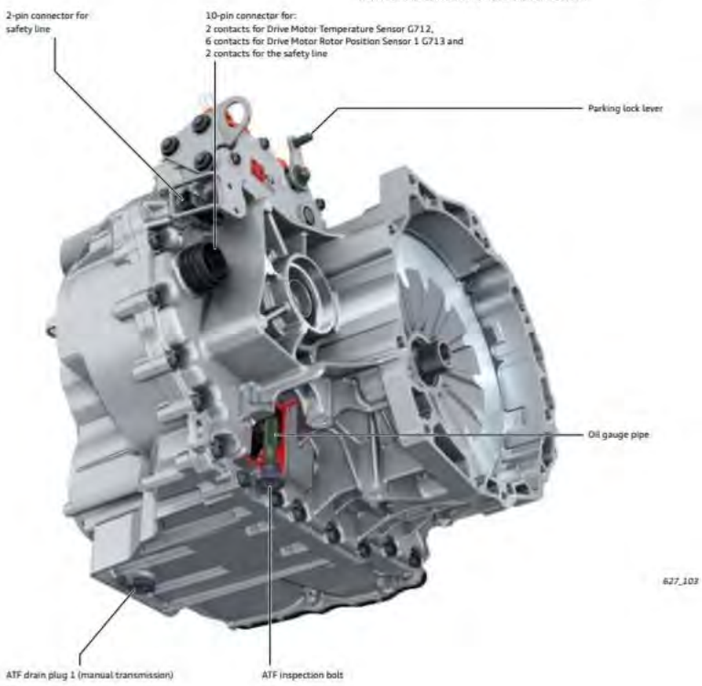

12

Figure 123

COUNT XVIII – INFRINGEMENT OF U.S. PATENT NO. 8,909,482

127. The allegations set forth in the foregoing paragraphs 1 through 126 are incorporated into this Eighteenth Claim for Relief.

128. On Dec. 9, 2014, U.S. Patent No. 8,909,482 ("the '482 patent"), entitled "Device for Measuring Power Consumption and Performance Relative to the Environment of a Power-Consuming Unit," was duly and legally issued by the United States Patent and Trademark Office. A true and correct copy of the '482 patent is attached as Exhibit 18.

129. Michigan Motor is the assignee and owner of the right, title and interests in and to the ’482 patent, including the right to assert all causes of action arising under said patents and the right to any remedies for infringement of them.

130. Upon information and belief, Defendants have directly infringed at least claim 1 of the ’482 patent by making, using, selling, importing and/or providing and causing to be used the 2013-2017 Volkswagen Jetta Hybrid and 2016-2018 Audi A3 Sportback e-tron (the “’482 patent Accused Instrumentalities”).

131. In particular, claim 1 of the ’482 patent recites a device for measuring power consumption and performance with respect to the environment of a power-consuming unit comprising a data introduction module, which receives at least one power consumption value, measured by a measurement apparatus of the power-consuming unit; an input device for inputting waste production data; a display screen; and a computer with a processor and a memory device having therein a plurality of instructions that, when executed by the processor, cause the processor to (a) receive the at least one power consumption value from the data introduction module, (b) receive the waste production data, (c) calculate an ecological parameter based on the at least one power consumption value and the waste production data, and (d) operate the display screen to display the calculated ecological parameter, wherein the calculated ecological parameter is an adjusted mean of the sum of the deviations of the at least one power consumption value with respect to a reference value corresponding to the at least one power consumption value.

132. On information and belief, the ’482 patent Accused Instrumentalities infringe claim 1 of the ’081 patent. The ’482 patent Accused Instrumentalities comprise a device for measuring power consumption and performance with respect to the environment of a power-consuming unit (*Figure 124*) comprising a data introduction module, which receives at least one

power consumption value, measured by a measurement apparatus of the power-consuming unit; an input device for inputting waste production data; a display screen; and a computer with a processor and a memory device having therein a plurality of instructions that, when executed by the processor, cause the processor to (a) receive the at least one power consumption value from the data introduction module, (*Figure 125*) (b) receive the waste production data (*Figures 125-126*), (c) calculate an ecological parameter based on the at least one power consumption value and the waste production data, and (*Figure 127*) (d) operate the display screen to display the calculated ecological parameter (*Figure 127*), wherein the calculated ecological parameter is an adjusted mean of the sum of the deviations of the at least one power consumption value with respect to a reference value corresponding to the at least one power consumption value (*Figure 127*).

As shown below, the Power Meter shows the power requested by the driver (device for measuring power consumption and performance). The indicator also shows power consumption and performance with respect to the environment (operation in Eco range) of the power consuming unit.

Also, exemplified below, the electric power meter shows the power available from the electric drive motor (device for measuring power consumption and performance). The electric power meter allows the driver to depress the accelerator pedal only so far that the output of 20 kW [motor] is not exceeded (shows power consumption and performance with respect to the environment). This allows the driver to prevent an unwanted start of the combustion engine.

Power meter

The power meter shows the power requested by the driver. If the indicator remains in the Eco range, then the vehicle is being moved efficiently and it is possible to drive electrically.

Electric power meter

The electric power meter shows the power available from the electric drive motor. The electric power meter allows the driver to depress the accelerator pedal only so far that the output of 20 kW is not exceeded. This allows the driver to prevent an unwanted start of the combustion engine.

Figure 124

As shown below, the engine control unit (ECU) J623 comprises a data introduction module, which receives at least one power consumption value (load requirements), measured by a measurement apparatus (hybrid CAN BUS and Powertrain CAN BUS) of the power-consuming unit (drivetrain) (shown above).

Upon information and belief, the operating strategy for the electric drive motor and combustion engine functions is integrated into the engine control unit (ECU) J623. The operating strategy automatically selects the optimal operating state for the drive train and thereby avoids operating ranges of the combustion engine with a low level of efficiency (The ECU is capable of identifying and inputting waste production data). Where only a low torque or power output is required, the engine is switched off.

High voltage system control

The operating strategy for the electric drive motor and combustion engine functions is integrated into the engine control unit J623. The operating strategy automatically selects the optimal operating state for the drive train and thereby avoids operating ranges of the combustion engine with a low level of efficiency. Where only a low torque or power output is required, the engine is switched off.

The engine control unit is connected to the high-voltage battery and the power electronics by the hybrid CAN bus. The state of the high-voltage components is sent to the engine control unit, which controls the electrical ready-to-drive mode. All other information which is required for electric driving or charging the high-voltage battery, such as the load requirements, air conditioning requirements, temperature, etc. are exchanged via the hybrid CAN bus and the powertrain CAN bus.

Figure 125

Upon information and belief, the operating strategy for the electric drive motor and combustion engine functions is integrated into the data introduction module of the engine control unit (ECU) J623 (the ECU practices is a computer with a processor and a memory device having therein a plurality of instructions). The operating strategy (plurality of instructions) automatically selects the optimal operating state for the drive train and thereby avoids operating ranges of the combustion engine with a low level of efficiency (power consumption value) - where only a low torque or power output is required, the engine is switched off. The ECU J623 receives input from the heated Oxygen Sensor G130 which is an indication of engine operating efficiency, or inefficiency, as in waste production, because it is located after the catalytic converter.

System overview 1.4l TFSI engine

Sensors

Intake manifold pressure sender G71 (after throttle valve)
Intake air temperature sensor G42

Charge pressure sender G31 with intake air temperature sender 2 G299 (after throttle valve)

Engine speed sender G28

Hall sender G40

Throttle valve control unit J338
Throttle valve drive angle senders 1 and 2 G187, G188

Accelerator pedal position sendes G79 and G185

Clutch position sender G476

Brake light switch F
Brake pedal switch F63

Fuel pressure sender G247

Knock sensor 1 G61

Coolant temperature sender G62

Radiator outlet coolant temperature sender G83

Lambda probe G39

Lambda probe after catalytic converter G130

Brake servo pressure sensor G294*

Auxiliary input signals:
- Cruise control system I/O via J527
- Alternator terminal DFM
- Radiator fan speed 1 (pulse width modulated signal)

* only relevent to vehicles with twin-clutch gearbox and ABS without ESP

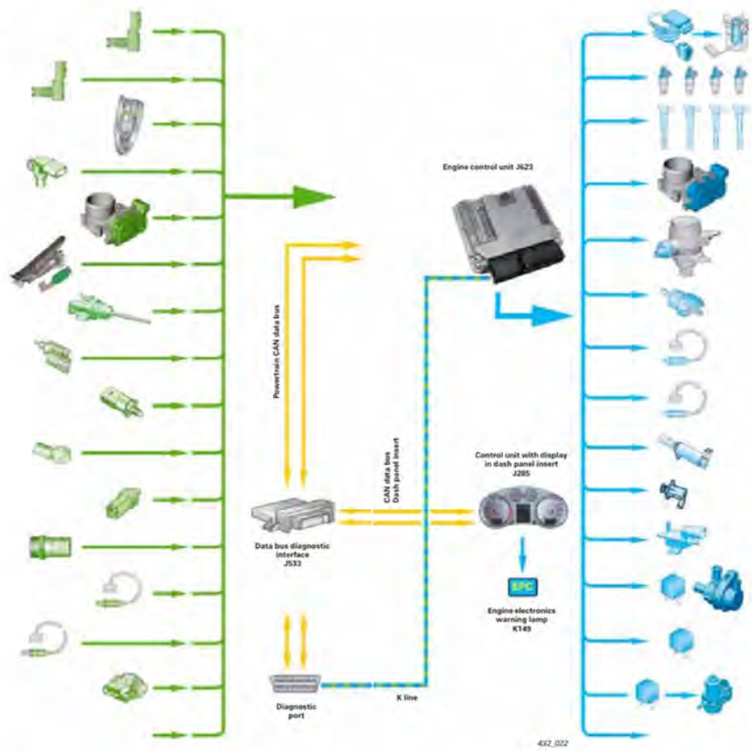

Actuators

Fuel pump control unit J538
Fuel pump (pre-supply pump) G6

Injector, cylinder 1 – 4
N30 – N33

Ignition coil 1 – 4 with output stage
N70, N127, N291, N292

Throttle valve control unit J338
Throttle valve with electric power control G186

Fuel pressure regulating valve N276

Activated charcoal filter solenoid valve 1 N80

Lambda probe heater Z19

Lambda probe 1 heating, after catalytic converter Z29

Inlet camshaft timing adjustment valve -1- N205

Turbocharger divert air valve N249

Charge pressure control solenoid valve N75

Auxiliary coolant pump relay J496
Coolant circulation pump V50

Motronic current supply relay J271

Vacuum pump relay J57
Vacuum pump for brakes V192
(for vehicles with automatic gearbox)

Auxiliary output signal:
- Brake light to onboard power supply control unit J519

48 49

7 Heated Oxygen Sensor

➤ "7.1 Overview - Heated Oxygen Sensor", page 294

➤ "7.2 Heated Oxygen Sensor, Removing and Installing", page 296

7.1 Overview - Heated Oxygen Sensor

Note

- *Coat the new heated oxygen sensors with an assembly paste. This paste must not get into the slots of the heated oxygen sensor body.*
- *Only the threads on a used heated oxygen sensor may be coated with hot bolt paste. This paste must not get into the slots of the heated oxygen sensor body. Hot bolt paste: Refer to the Parts Catalog.*
- *The oxygen sensor wire must always be attached at the same location when installing. Do not let the wire connection come in contact with the exhaust pipe.*

1 - Bracket
- ❑ To plenum chamber
- ❑ Coupling point for the Oxygen Sensor 1 before Catalytic Converter - GX10-

2 - Oxygen Sensor 1 Before Catalytic Converter - GX10-
- ❑ 55 Nm
- ❑ Consists of:

  Heated Oxygen Sensor - G39-

  Oxygen Sensor Heater - Z19-
- ❑ Removing and Installing. Refer to ➤ "7.2.2 Oxygen Sensor 1 before Catalytic Converter GX10 , Removing and Installing", page 296 .

3 - Connector
- ❑ For the Oxygen Sensor 1 before Catalytic Converter - GX10-

4 - Oxygen Sensor 1 after Catalytic Converter - GX7-
- ❑ 55 Nm
- ❑ Consists of:

  Oxygen Sensor after Catalytic Converter - G130-

  Heater for Oxygen Sensor 2 after Catalytic Converter - Z30-

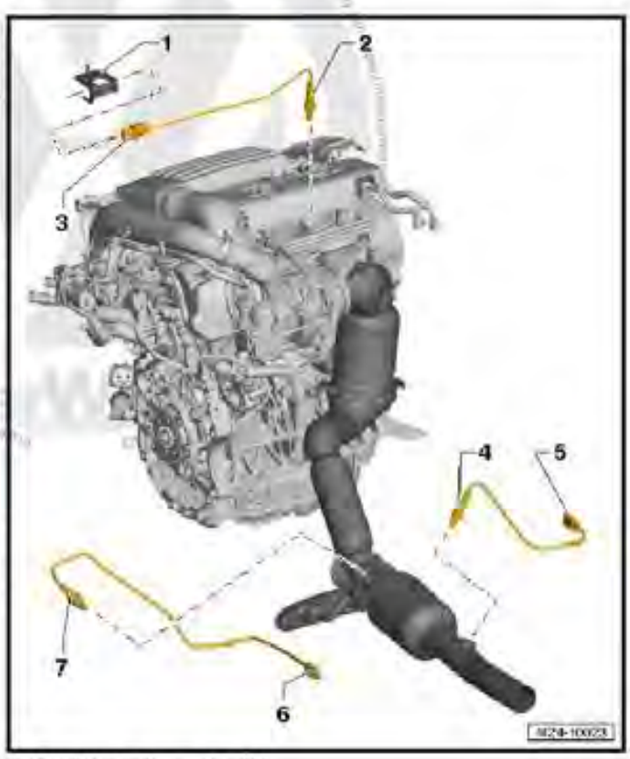

Jetta 2011, Jetta 2015, 4-Cylinder Direct Injection (1.4L Engine, 4V, EA 211, Turbocharger Hybrid) Edition 12.2017

Repair Manual
Jetta 2011 ➤
Jetta 2015 ➤

4-Cylinder Direct Injection (1.4L Engine, 4V, EA 211, Turbocharger, Hybrid)									
Engine ID	CNL A	CRJA							

Edition 12.2017

Figure 126

The ECU J623 receives input from the heated Oxygen Sensor G130 which is an indication of engine operating efficiency, or inefficiency, and thus constitutes waste production data, because the heated Oxygen Sensor G130 is located after the catalytic converter. The ECU J623 calculates an ecological parameter (a particular mode of economic driving that results in the maximum operating efficiency and thus, minimal environmental impact) based on the at least one power consumption value (low level of engine efficiency) and the waste production data (oxygen sensor output).

High voltage system control

The operating strategy for the electric drive motor and combustion engine functions is integrated into the engine control unit J623. The operating strategy automatically selects the optimal operating state for the drive train and thereby avoids operating ranges of the combustion engine with a low level of efficiency. Where only a low torque or power output is required, the engine is switched off.

The engine control unit is connected to the high-voltage battery and the power electronics by the hybrid CAN bus. The state of the high-voltage components is sent to the engine control unit, which controls the electrical ready-to-drive mode. All other information which is required for electric driving or charging the high-voltage battery, such as the load requirements, air conditioning requirements, temperature, etc. are exchanged via the hybrid CAN bus and the powertrain CAN bus.

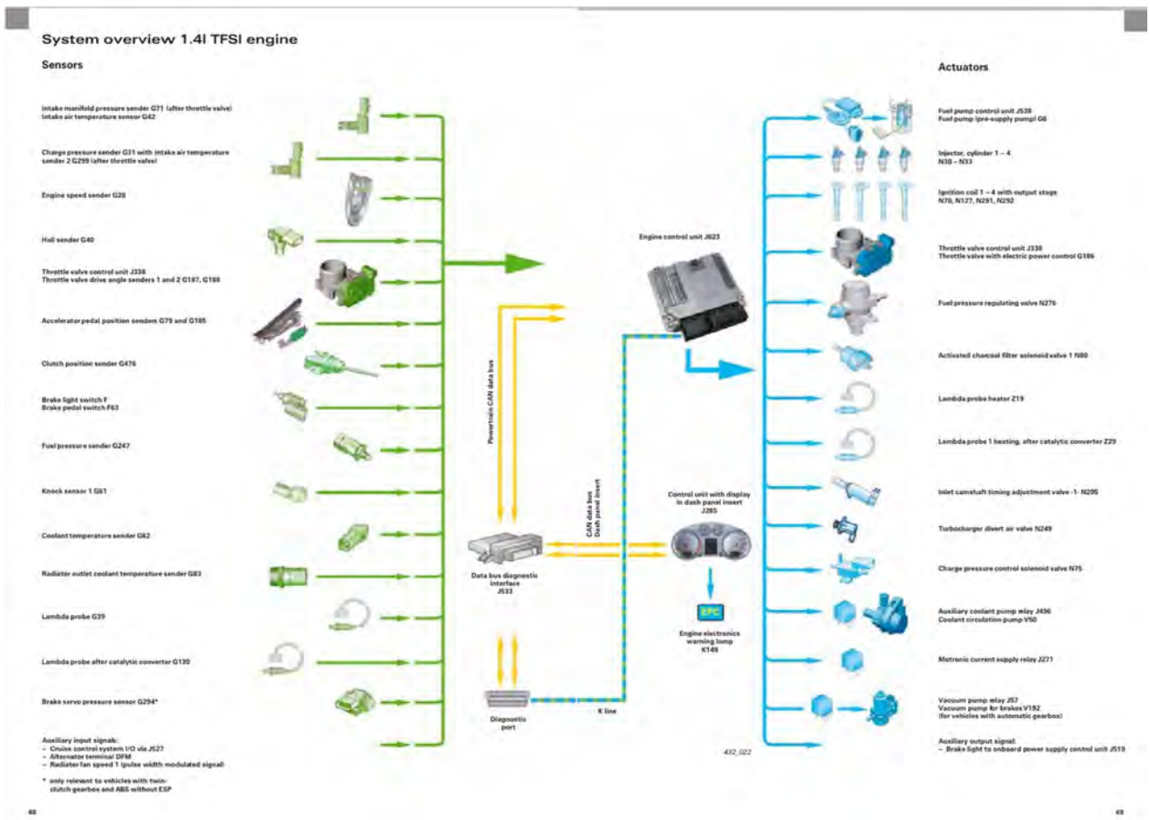
System overview 1.4l TFSI engine
Sensors
Intake manifold pressure sender G71 (after throttle valve)
Intake air temperature sensor G42
Charge pressure sender G31 with intake air temperature sender 2 G299 (after throttle valve)
Engine speed sender G28
Hall sender G40
Throttle valve control unit J338
Throttle valve drive angle senders 1 and 2 G187, G188
Accelerator pedal position senders G79 and G185
Clutch position sender G476
Brake light switch F
Brake pedal switch F63
Fuel pressure sender G247
Knock sensor 1 G61
Coolant temperature sender G62
Radiator outlet coolant temperature sender G83
Lambda probe G39
Lambda probe after catalytic convertor G130
Brake servo pressure sensor G294*
Auxiliary input signals:
– Cruise control system I/O via J527
– Alternator terminal DFM
– Radiator fan speed 1 (pulse width modulated signal)
* only relevant to vehicles with twin-clutch gearbox and ABS without ESP
Powertrain CAN data bus
Data bus diagnostic interface J533
CAN data bus Dash panel insert
Diagnostic port
K line
Engine control unit J623
Control unit with display in dash panel insert J285
EPC
Engine electronics warning lamp K149
432_022
Actuators
Fuel pump control unit J538
Fuel pump (pre-supply pump) G6
Injector, cylinder 1 – 4
N30 – N33
Ignition coil 1 – 4 with output stage
N70, N127, N291, N292
Throttle valve control unit J338
Throttle valve with electric power control G186
Fuel pressure regulating valve N276
Activated charcoal filter solenoid valve 1 N80
Lambda probe heater Z19
Lambda probe 1 heating, after catalytic converter Z29
Inlet camshaft timing adjustment valve -1- N205
Turbocharger divert air valve N249
Charge pressure control solenoid valve N75
Auxiliary coolant pump relay J496
Coolant circulation pump V50
Motronic current supply relay J271
Vacuum pump relay J57
Vacuum pump for brakes V192
(for vehicles with automatic gearbox)
Auxiliary output signal:
– Brake light to onboard power supply control unit J519

Power meter

The power meter shows the power requested by the driver. If the indicator remains in the Eco range, then the vehicle is being moved efficiently and it is possible to drive electrically.

Electric power meter

The electric power meter shows the power available from the electric drive motor. The electric power meter allows the driver to depress the accelerator pedal only so far that the output of 20 kW is not exceeded. This allows the driver to prevent an unwanted start of the combustion engine.

Jetta 2011 ➤ , Jetta 2015 ➤
4-Cylinder Direct Injection (1.4L Engine, 4V, EA 211, Turbocharger, Hybrid) - Edition 12.2017

7 Heated Oxygen Sensor

➤ "7.1 Overview - Heated Oxygen Sensor", page 294

➤ "7.2 Heated Oxygen Sensor, Removing and Installing", page 296

7.1 Overview - Heated Oxygen Sensor

Note

- *Coat the new heated oxygen sensors with an assembly paste. This paste must not get into the slots of the heated oxygen sensor body.*
- *Only the threads on a used heated oxygen sensor may be coated with hot bolt paste. This paste must not get into the slots of the heated oxygen sensor body. Hot bolt paste: Refer to the Parts Catalog.*
- *The oxygen sensor wire must always be attached at the same location when installing. Do not let the wire connection come in contact with the exhaust pipe.*

1 - Bracket
- ❑ To plenum chamber
- ❑ Coupling point for the Oxygen Sensor 1 before Catalytic Converter - GX10-

2 - Oxygen Sensor 1 Before Catalytic Converter - GX10-
- ❑ 55 Nm
- ❑ Consists of:

  Heated Oxygen Sensor - G39-

  Oxygen Sensor Heater - Z19-
- ❑ Removing and installing, Refer to ➤ "7.2.2 Oxygen Sensor 1 before Catalytic Converter GX10 , Removing and Installing", page 296 .

3 - Connector
- ❑ For the Oxygen Sensor 1 before Catalytic Converter - GX10-

4 - Oxygen Sensor 1 after Catalytic Converter - GX7-
- ❑ 55 Nm
- ❑ Consists of:

  Oxygen Sensor after Catalytic Converter - G130-

  Heater for Oxygen Sensor 2 after Catalytic Converter - Z30-

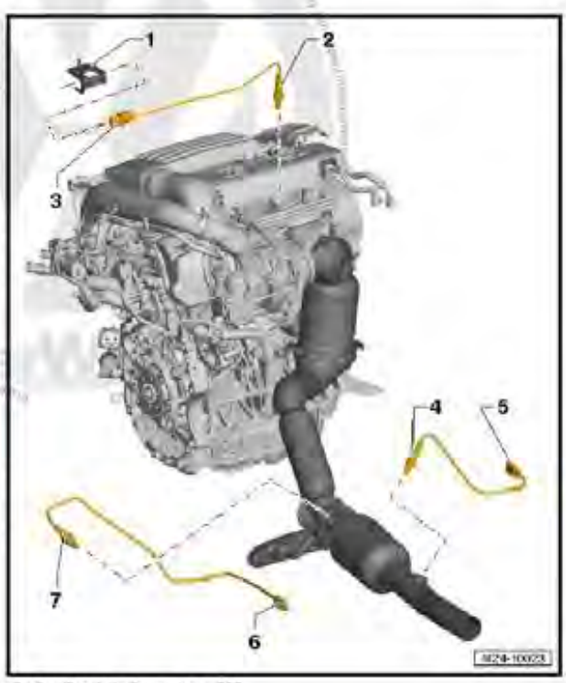

Upon information and belief, the ’482 patent Accused Instrumentalities calculate the ecological parameter is an adjusted mean of the sum of the deviations of the at least one power consumption value (low level of engine efficiency) with respect to a reference value corresponding to the at least one power consumption value.

Based upon the totality of the foregoing evidence, and based further upon information and belief, the ’482 patent Accused Instrumentalities include “a device for measuring power consumption and performance with respect to the environment of a power-consuming unit comprising a data introduction module, which receives at least one power consumption value, measured by a

measurement apparatus of the power-consuming unit; an input device for inputting waste production data; a display screen; and a computer with a processor and a memory device having therein a plurality of instructions that, when executed by the processor, cause the processor to (a) receive the at least one power consumption value from the data introduction module, (b) receive the waste production data, (c) calculate an ecological parameter based on the at least one power consumption value and the waste production data, and (d) operate the display screen to display the calculated ecological parameter, wherein the calculated ecological parameter is an adjusted mean of the sum of the deviations of the at least one power consumption value with respect to a reference value corresponding to the at least one power consumption value."

Figure 127

COUNT XIX – INFRINGEMENT OF U.S. PATENT NO. 6,557,540

133. The allegations set forth in the foregoing paragraphs 1 through 132 are incorporated into this Nineteenth Claim for Relief.

134. On May 6, 2003, U.S. Patent No. 6,557,540 ("the '540 patent"), entitled "Method of Calculating a Valve Timing Command for an Engine," was duly and legally issued by the United States Patent and Trademark Office. A true and correct copy of the '540 patent is attached as Exhibit 19.

135. Michigan Motor is the assignee and owner of the right, title and interests in and to the '540 patent, including the right to assert all causes of action arising under said patents and the right to any remedies for infringement of them.

136. Upon information and belief, Defendants have directly infringed at least claims 1, 7, 11, and 14 of the '540 patent by making, using, selling, importing and/or providing and causing to be used the 2011-2015 Volkswagen Jetta (2.0L) direct injection engine (the "'540 patent Accused Instrumentalities").

137. In particular, claim 1 of the '540 patent recites a method for calculating a valve timing command for an engine of a vehicle, comprising: obtaining an engine performance command; receiving an environmental conditions signal; determining a valve feedforward term based on the engine performance command and the environmental conditions signal; receiving

an engine performance feedback; calculating a valve feedback term based on the engine performance command and the engine performance feedback; and calculating a valve timing command based on the valve feedforward term and the valve feedback term.

138. On information and belief, the ’540 patent Accused Instrumentalities infringe claim 1 of the ’540 patent. The ’540 patent Accused Instrumentalities practice a method for calculating a valve timing command for an engine of a vehicle, comprising (*Figure 128*): obtaining an engine performance command (*Figure 129*); receiving an environmental conditions signal (*Figure 130*); determining a valve feedforward term based on the engine performance command and the environmental conditions signal (*Figure 131*); receiving an engine performance feedback (*Figure 132*); calculating a valve feedback term based on the engine performance command and the engine performance feedback (*Figure 133*); and calculating a valve timing command based on the valve feedforward term and the valve feedback term (*Figure 134*).

As depicted below the Engine Control Module (ECM) calculates valve timing for an engine of a vehicle.

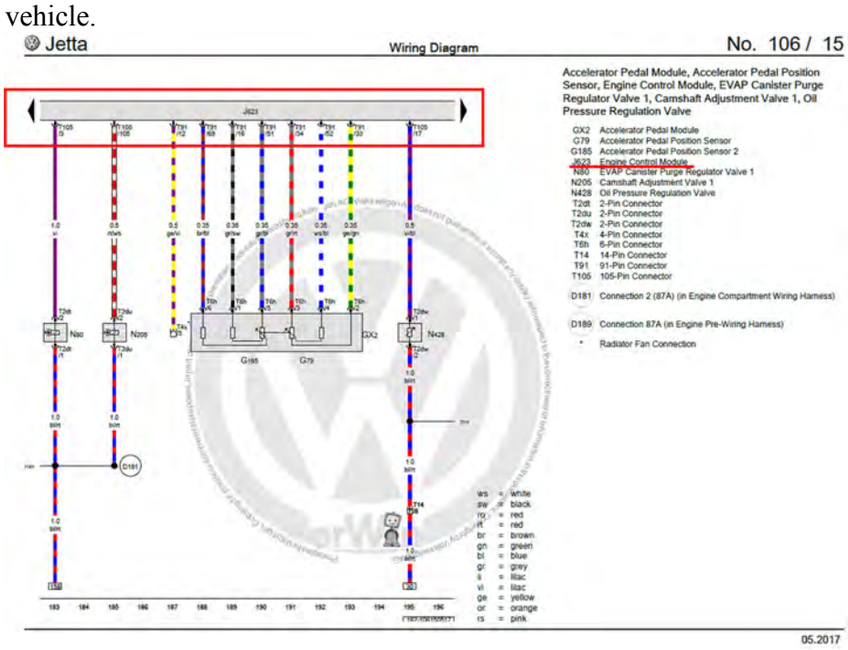

Figure 128

For example, as shown below, the Accelerator Pedal Position Sensor provides a signal to the ECM for the performance commands from the operator.

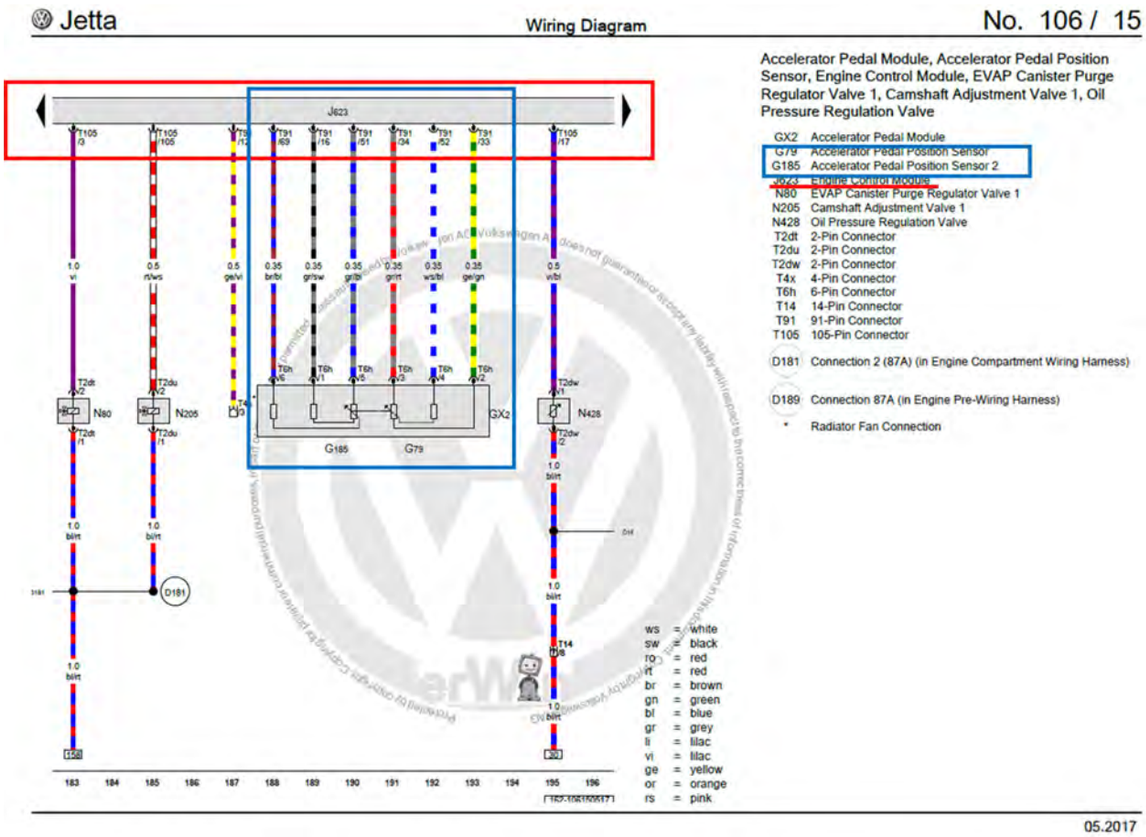

For example, as shown below, the Cruise Control Switch provides a signal to the ECM for the performance commands based on the cruise control settings.

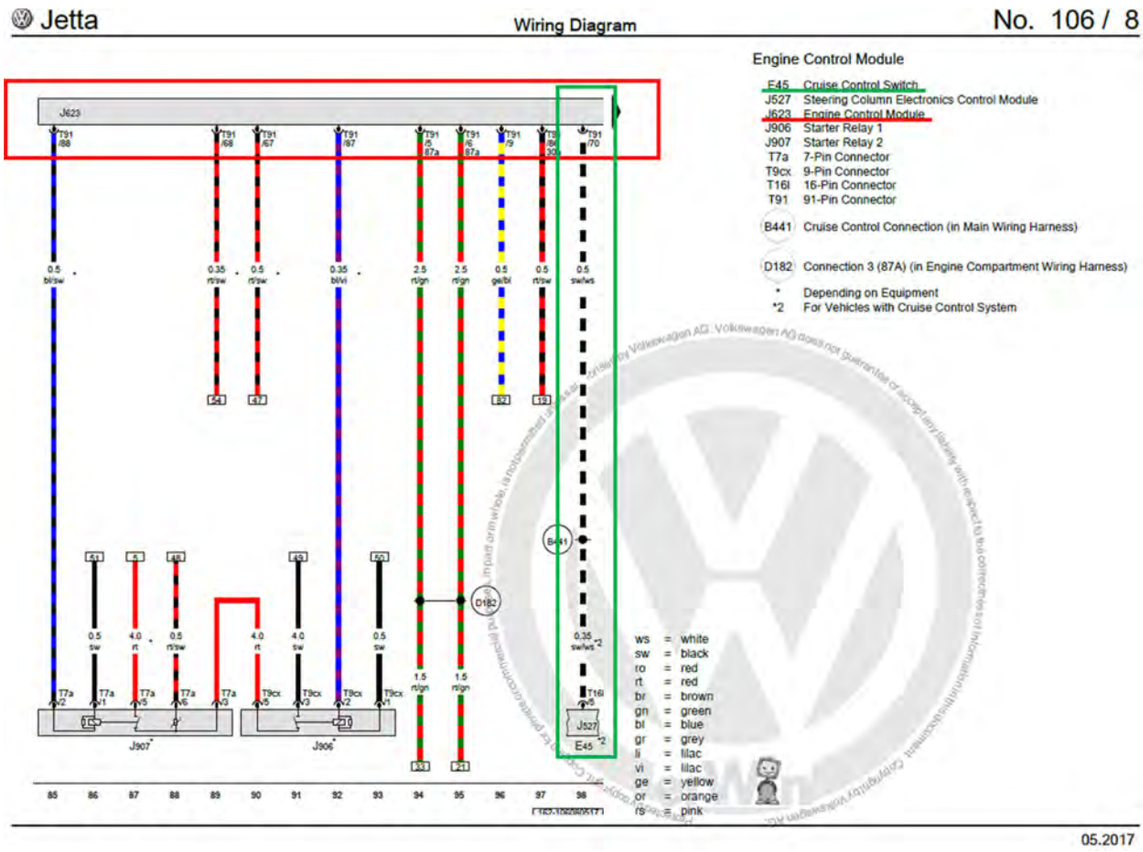

For example, as shown below, an engine performance command (traction control signal and acceleration signal) is obtained by the ECM.

How does Volkswagen Electronic Stability Control work?

During the 2009 model year Volkswagen made the decision to add Electronic Stability Control as a safety feature on its entire lineup, a full three years before it became required on all new vehicles for 2012. You won't find a new vehicle without this feature in much the same way you can expect the safety features to always include airbags, but what is it and **how does Volkswagen Electronic Stability Control work**?

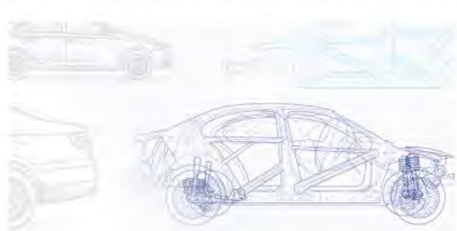

Many people are already aware of the anti-lock brake feature, which prevents wheels from locking up when braking, and traction control, which is meant to prevent wheels from spinning. Electronic stability control (ESC) uses the same hardware as these other safety features, but also uses a yaw rate, steering angle and acceleration sensors to detect whether the vehicle is headed in the direction the driver is attempting to make it go in. Whether the road conditions are slipper or you're driving at high speeds, when the ESC system detects a slip, brakes are automatically applied to just the wheels that aren't going in the right direction.

Read More: VW Technology & Features

https://www.newcenturyvw.com/blog/how-does-volkswagen-electronic-stability-control-work/

For example, as shown below, the electronic stability program (ESP) sensor unit (G419), and ABS control module and wheel speed sensors obtain engine performance commands.

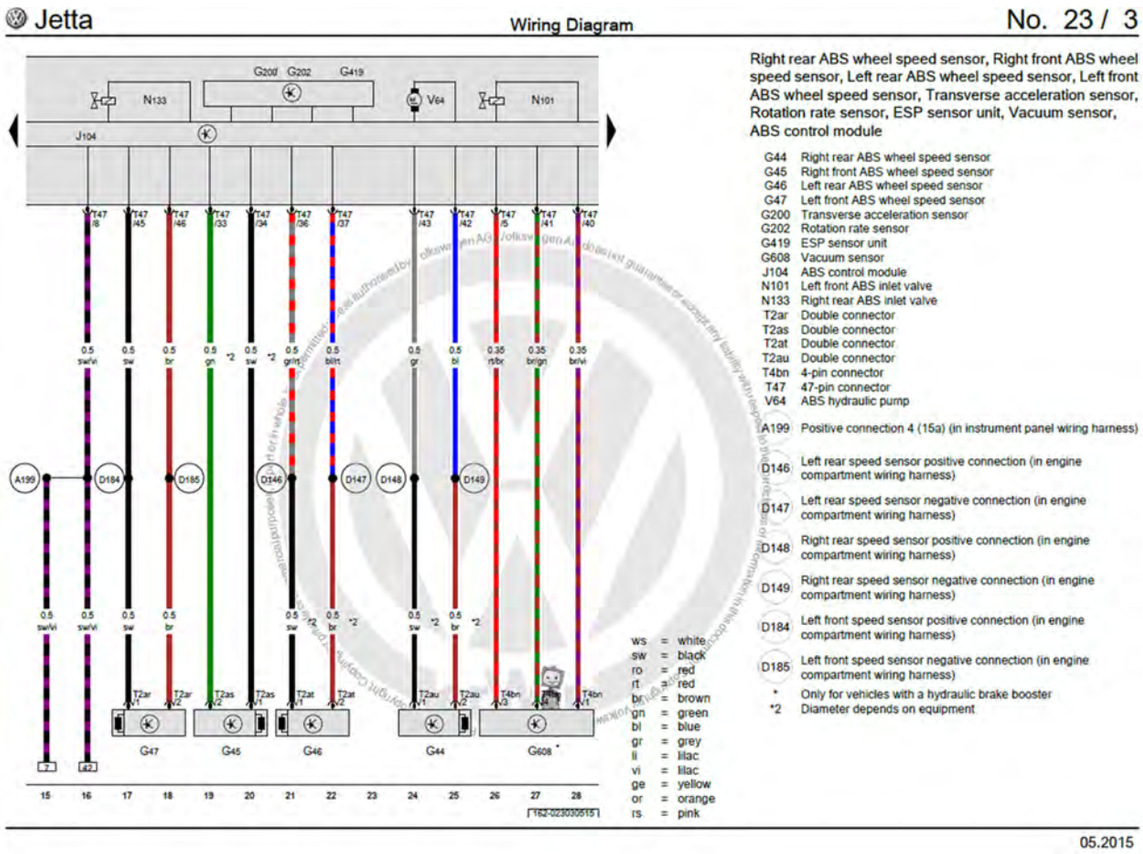

Figure 129

For example, as depicted below, the Manifold Absolute Pressure (MAP) sensors (G71) measure barometric pressure during key on, engine off (KOEO) which is received by the ECM (J623). Also, the Intake Air Temperature Sensor (IATS; G42) senses the temperature of the incoming air which is received by the ECM (J623).

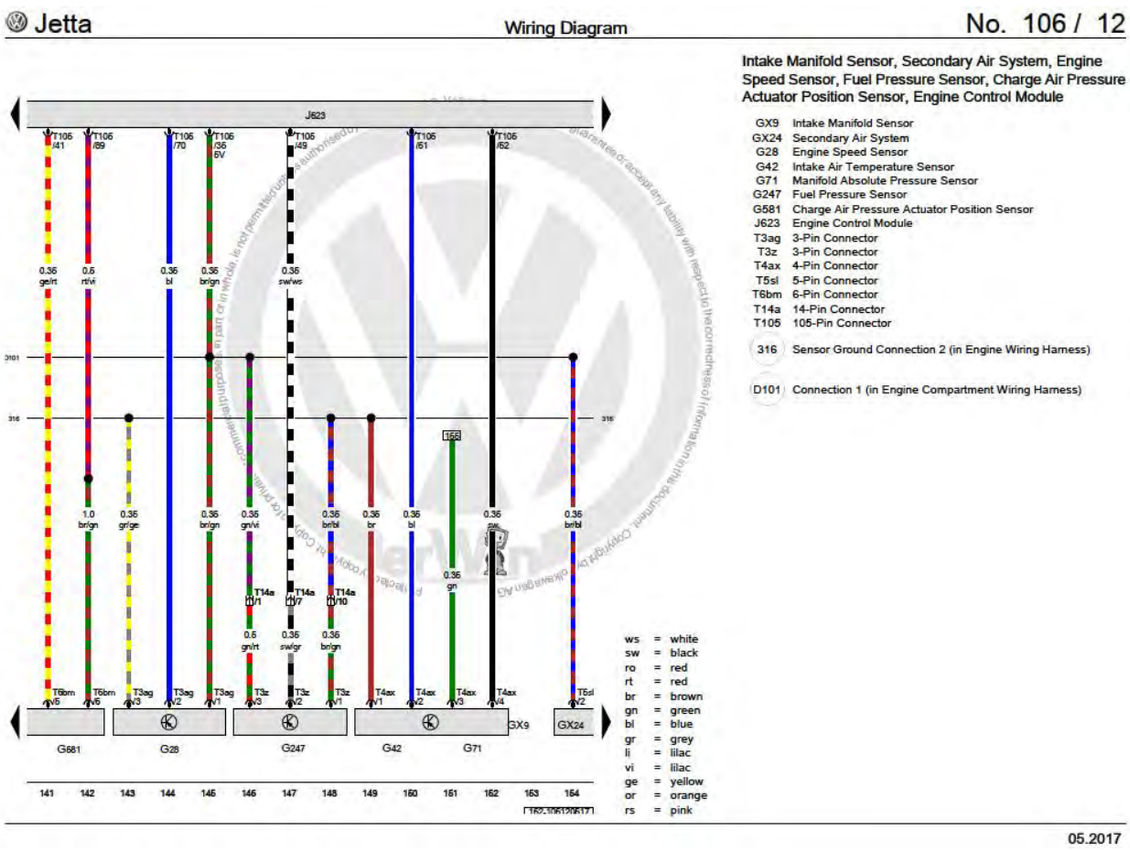

Figure 130

For example, using the Accelerator Pedal Module (GX2), which controls the Accelerator Pedal Position Sensor (G79) and the Accelerator Position Sensor 2 (G185), engine performance commands are sent, via the Engine Control Module (ECM; J623) and the environmental conditions signal(s) are sent using environmental commands from the IATS and MAPS (shown above) which send the environmental conditions signals to the ECM to determine a valve feed forward term.

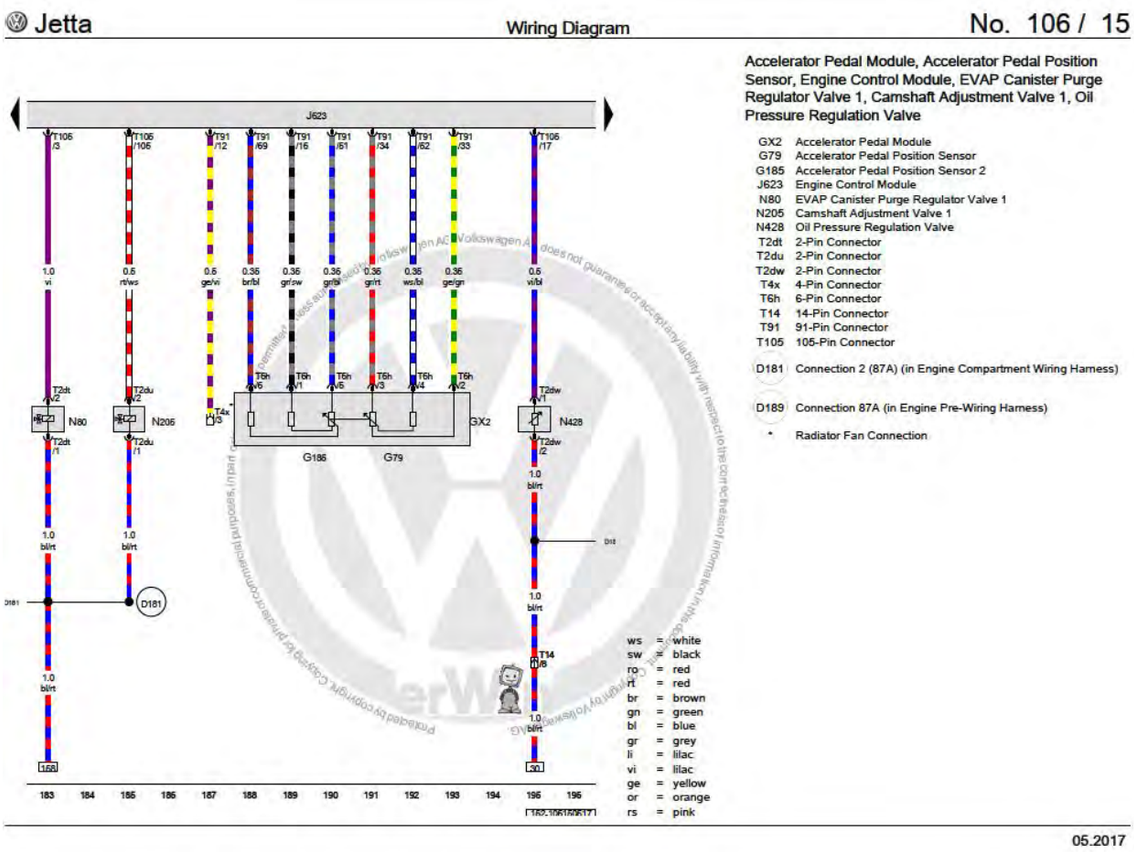

Figure 131

For example, the Engine Control Module (ECM; J623) receives engine performance feedback from various sensors including the engine speed sensor (G28) shown below.

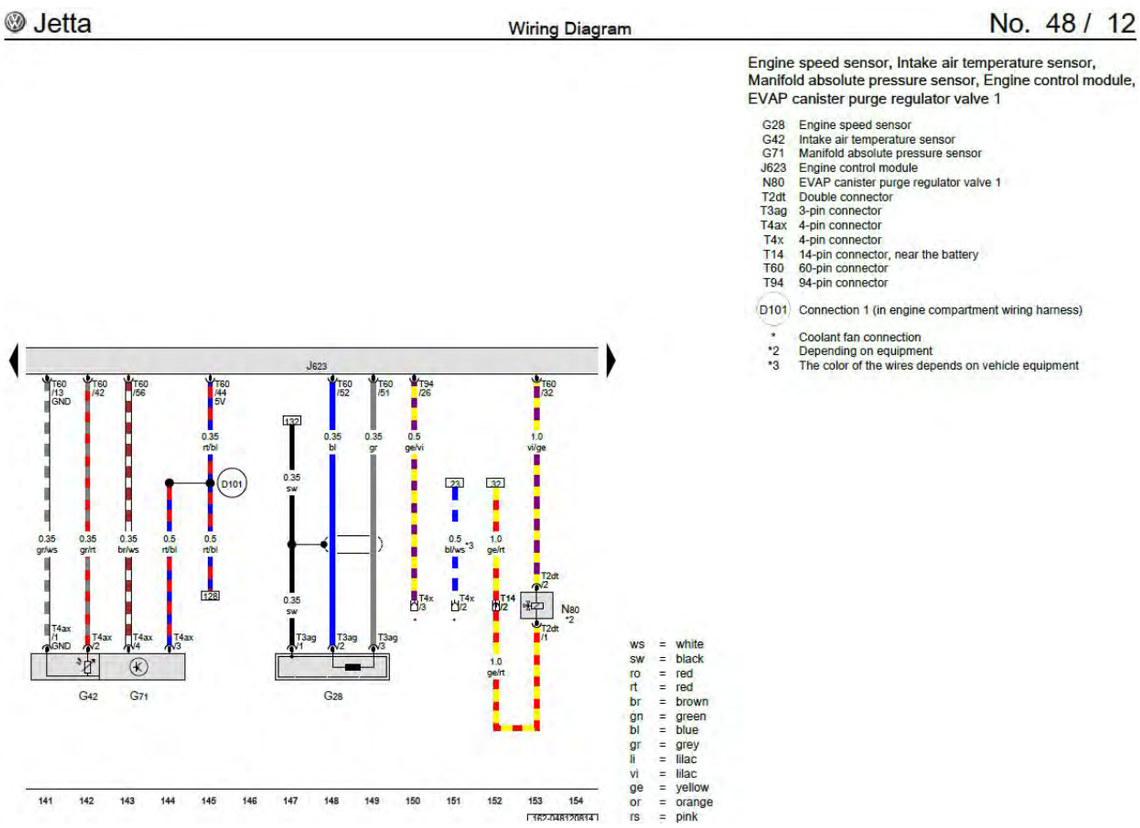

Figure 132

For example, as shown below the ECM (J623) calculates a valve feedback term which is communicated to the camshaft adjustment valve (N205) capable of advancing or retarding the camshaft (adjusting itself) based on a performance command (i.e. from the Accelerator Pedal Module) and the performance feedback (i.e. engine speed sensor (G28 (shown above)).

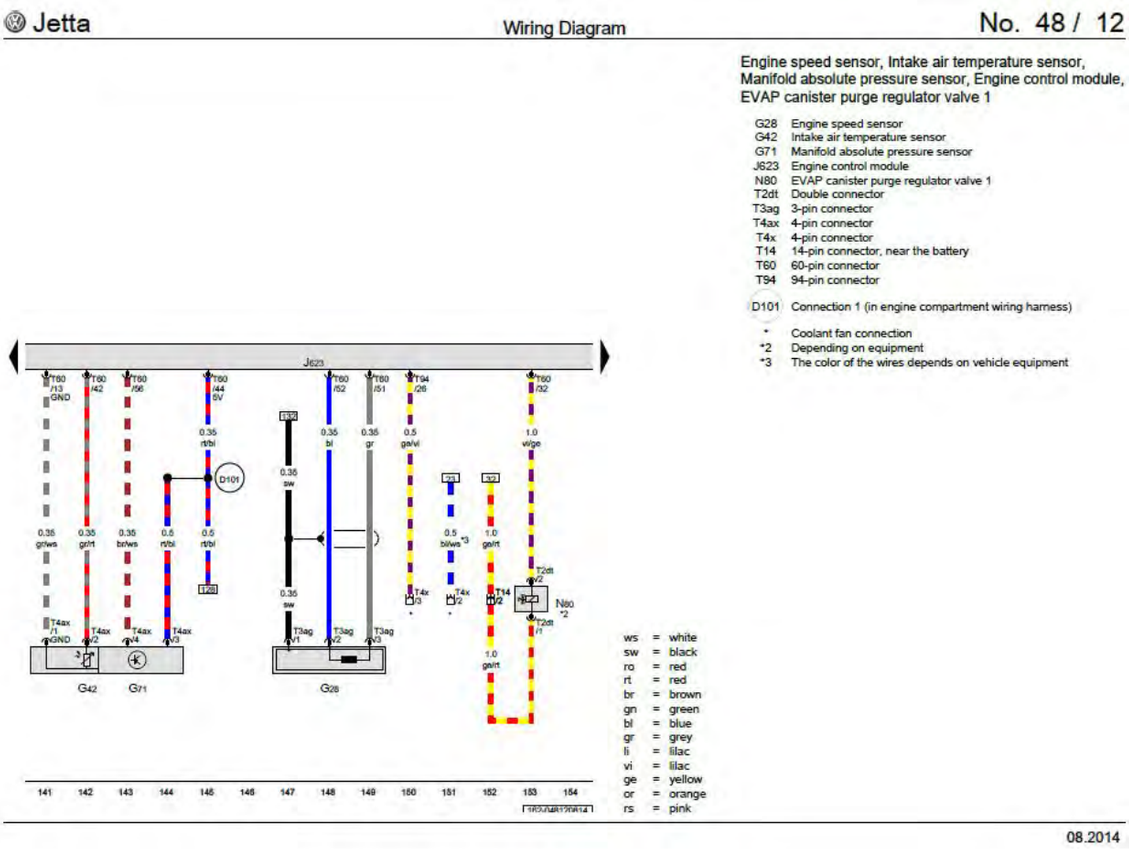

Figure 133

For example, as shown below the ECM (J623) calculates a valve timing command which is communicated to the camshaft adjustment valve (N205) based on data from sensors such as the Accelerator Pedal Position Sensor (G79) and Accelerator Pedal Position Sensor 2 (G185) and the Accelerator Pedal Module (GX2)(feedforward term) and the engine performance based on engine speed sensor input (G28 (shown above)) (valve feedback term).

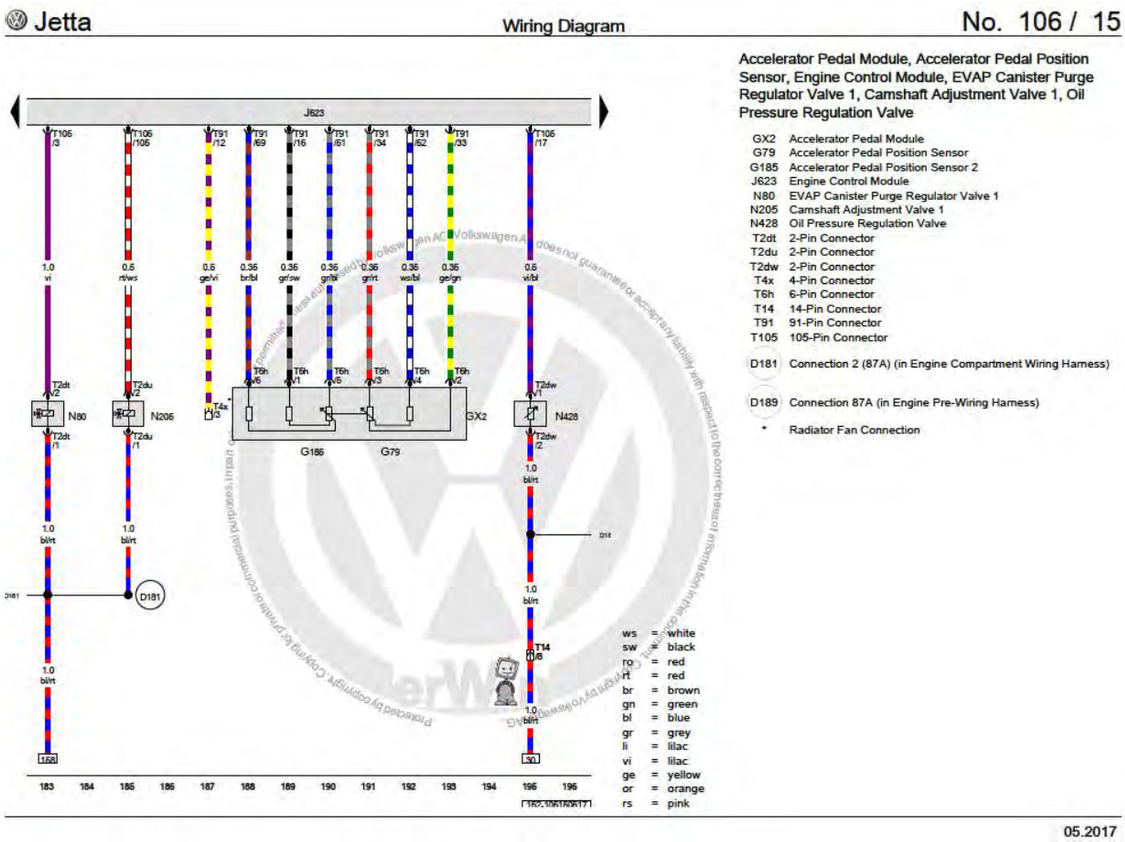

Figure 134

139. In particular, claim 7 of the ’540 patent recites the method of claim 1 wherein said receiving an engine performance feedback includes receiving engine speed data.

140. On information and belief, the ’540 patent Accused Instrumentalities infringe claim 7 of the ’540 patent. The ’540 patent Accused Instrumentalities practice the method of claim 1 wherein said receiving an engine performance feedback includes receiving engine speed data (*Figure 135*).

As shown below, the engine speed sensor (G28) provides engine performance feedback that is sent to the ECM (J623).

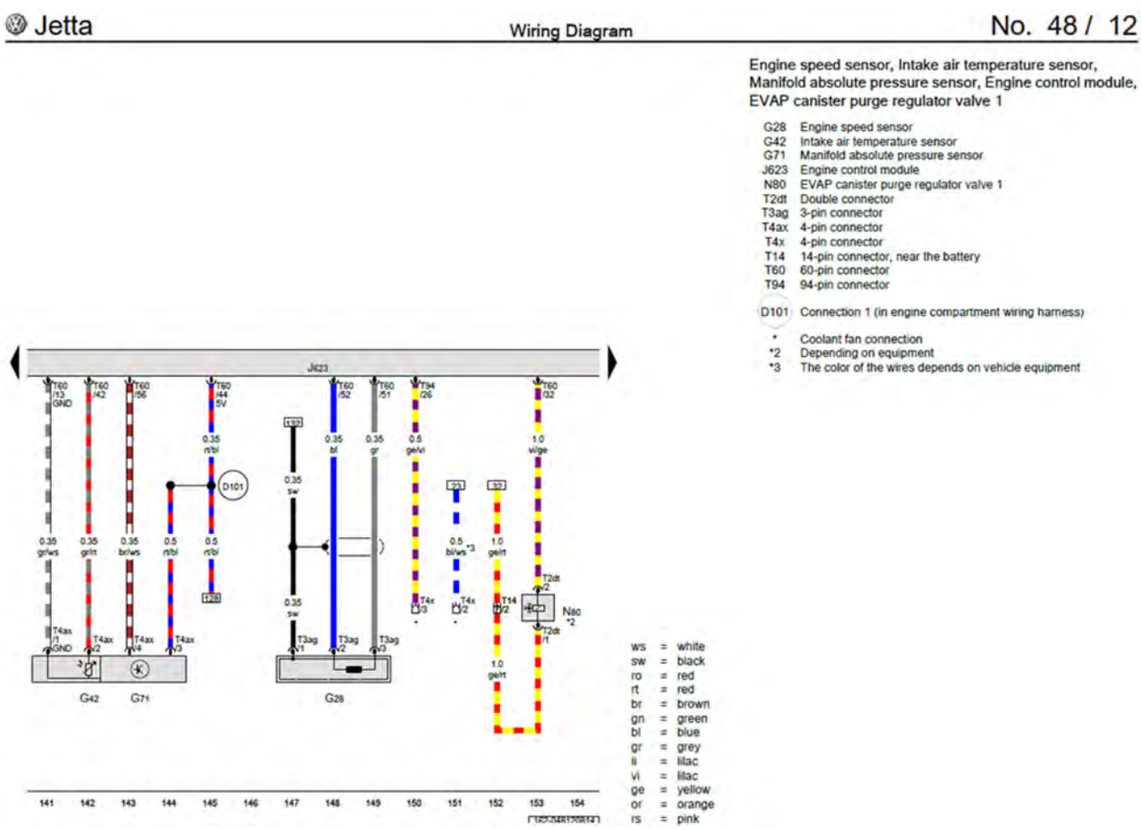

Figure 135

141. In particular, claim 11 of the ’540 patent recites the method of claim 1 further comprising receiving fuel conversion data.

142. On information and belief, the ’540 patent Accused Instrumentalities infringe claim 11 of the ’540 patent. The ’540 patent Accused Instrumentalities practice the method of claim 1 further comprising receiving fuel conversion data (*Figure 136*).

For example, the Heated Oxygen Sensor (G39) and the Oxygen sensor after three-way catalytic converter (G130) send fuel conversion data to the ECM (J623).

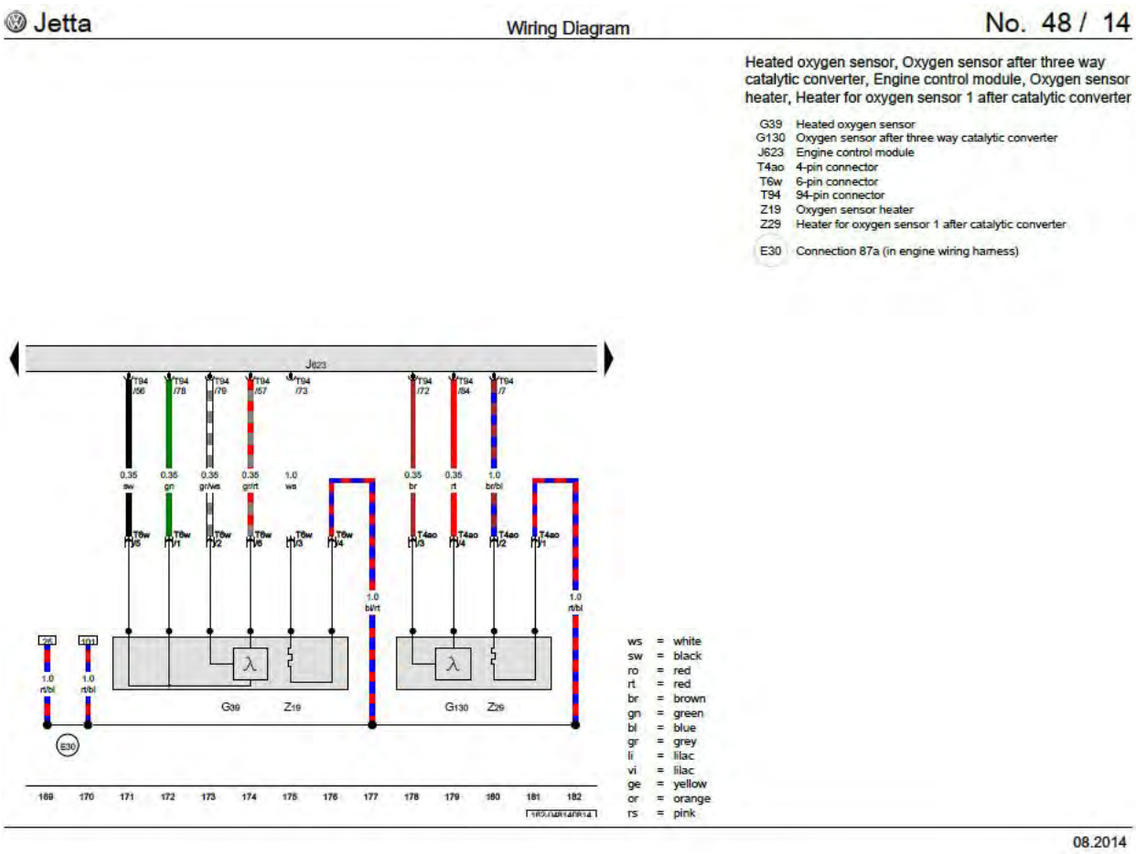

Figure 136

143. In particular, claim 14 of the ’540 patent recites the method of claim 1 further comprising receiving engine emissions data.

144. On information and belief, the ’540 patent Accused Instrumentalities infringe claim 14 of the ’540 patent. The ’540 patent Accused Instrumentalities practice the method of claim 1 further comprising receiving engine emissions data. (*Figure 137*).

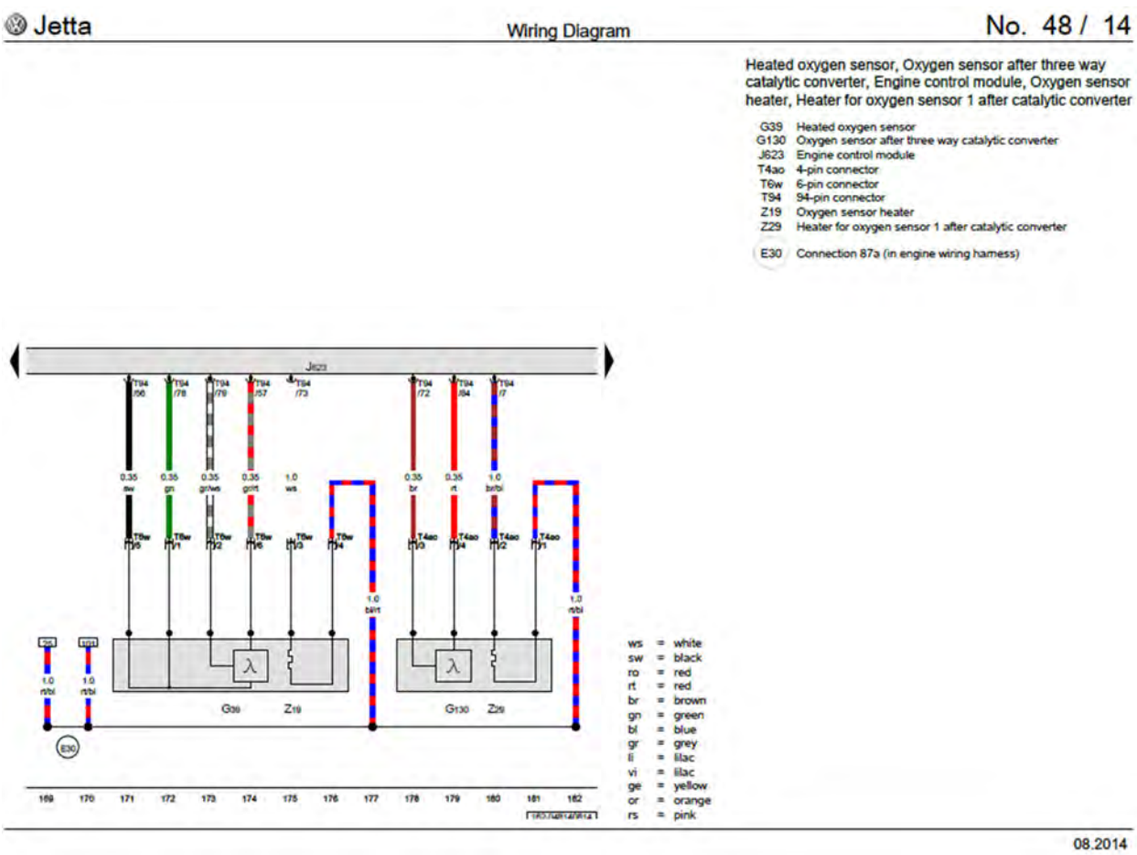

Figure 137

Based upon the totality of the foregoing evidence, and based further upon information and belief, the ’540 patent Accused Instrumentalities practice “a method for calculating a valve timing command for an engine of a vehicle, comprising: obtaining an engine performance command; receiving an environmental conditions signal; determining a valve feedforward term based on the engine performance command and the environmental conditions signal; receiving an engine performance feedback; calculating a valve feedback term based on the engine performance command and the engine performance feedback; and calculating a valve timing command based on the valve feedforward term and the valve feedback term.”

COUNT XX – INFRINGEMENT OF U.S. PATENT NO. 6,345,604

145. The allegations set forth in the foregoing paragraphs 1 through 144 are incorporated into this Twentieth Claim for Relief.

146. On Feb. 12, 2002, U.S. Patent No. 6,345,604 (“the ’604 patent”), entitled “Electronically Controlled Throttle Valve with Commanded Default Position for the Throttle Valve of an Internal Combustion Engine,” was duly and legally issued by the United States

Patent and Trademark Office. A true and correct copy of the ’604 patent is attached as Exhibit 20.

147. Michigan Motor is the assignee and owner of the right, title and interests in and to the ’604 patent, including the right to assert all causes of action arising under said patents and the right to any remedies for infringement of them.

148. Upon information and belief, Defendants have directly infringed at least claim 1 of the ’604 patent by making, using, selling, importing and/or providing and causing to be used the 2013-2018 Passat Sedan, 2012-2016 CC, 2012-2017 Touareg, 2018-2019 Atlas, and 2012-2016 Porsche Cayenne (the “’604 patent Accused Instrumentalities”).

149. In particular, claim 1 of the ’604 patent recites a throttle controller for an internal combustion engine having a throttle body including an adjustable throttle valve in an intake air passage; a throttle valve actuator motor connected to the throttle valve for activating the throttle valve between a closed position and a full-open position; a throttle position sensor connected to the throttle valve for developing a position signal indicating the actual throttle valve position; an ignition switch for initiating engine startup and engine shutdown and for developing an engine shutdown signal; an accelerator pedal and an accelerator position sensor for developing an actual accelerator pedal position signal; and an electronic microprocessor comprising an input signal conditioning circuit receiving the engine shutdown signal, the electronic microprocessor including means for developing a throttle valve actuator motor control signal responsive to the presence of an engine shutdown signal whereby the throttle valve actuator motor adjusts the throttle plate to a throttle plate position between the closed position and the fully open position to prevent throttle plate freezing when the engine is shut down.

150. On information and belief, the ’604 patent Accused Instrumentalities infringe claim 1 of the ’604 patent. The ’604 patent Accused Instrumentalities comprise a throttle

controller for an internal combustion engine having a throttle body including an adjustable throttle valve in an intake air passage (*Figure 138*); a throttle valve actuator motor connected to the throttle valve for activating the throttle valve between a closed position and a full-open position (*Figure 139*); a throttle position sensor connected to the throttle valve for developing a position signal indicating the actual throttle valve position (*Figure 140*); an ignition switch for initiating engine startup and engine shutdown and for developing an engine shutdown signal (*Figure 141*); an accelerator pedal and an accelerator position sensor for developing an actual accelerator pedal position signal (*Figure 142*); and an electronic microprocessor comprising an input signal conditioning circuit receiving the engine shutdown signal (*Figure 143*), the electronic microprocessor including means for developing a throttle valve actuator motor control signal responsive to the presence of an engine shutdown signal whereby the throttle valve actuator motor adjusts the throttle plate to a throttle plate position between the closed position and the fully open position to prevent throttle plate freezing when the engine is shut down (*Figure 144*).

The ’604 patent Accused Instrumentalities comprise a Throttle Valve Control Module (J338) which communicates with the Engine Control Module (ECM; J623).

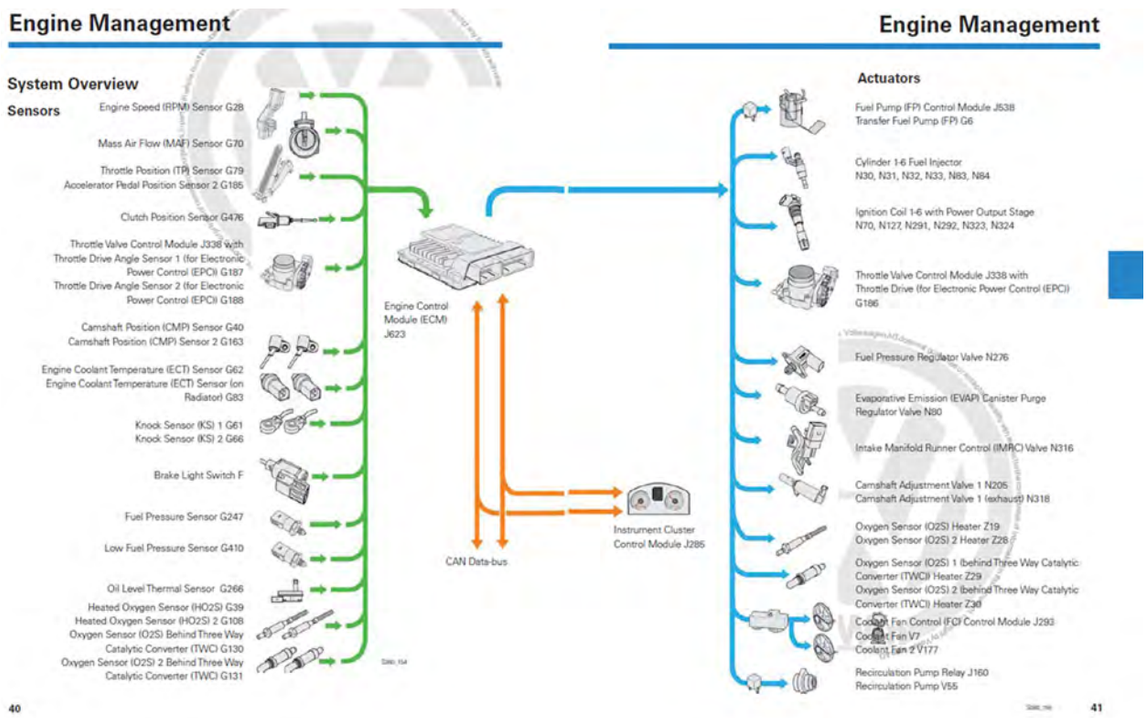

The throttle body includes an adjustable throttle valve in an intake air passage.

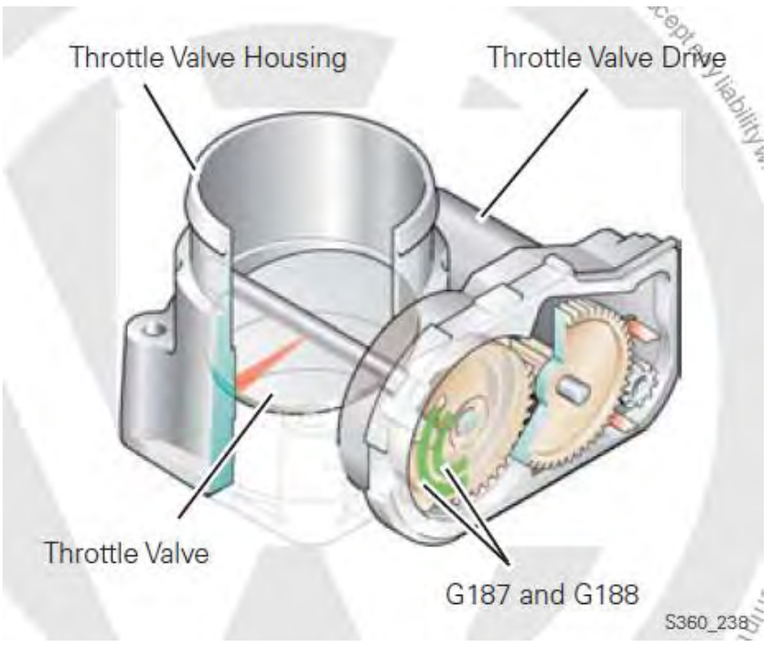

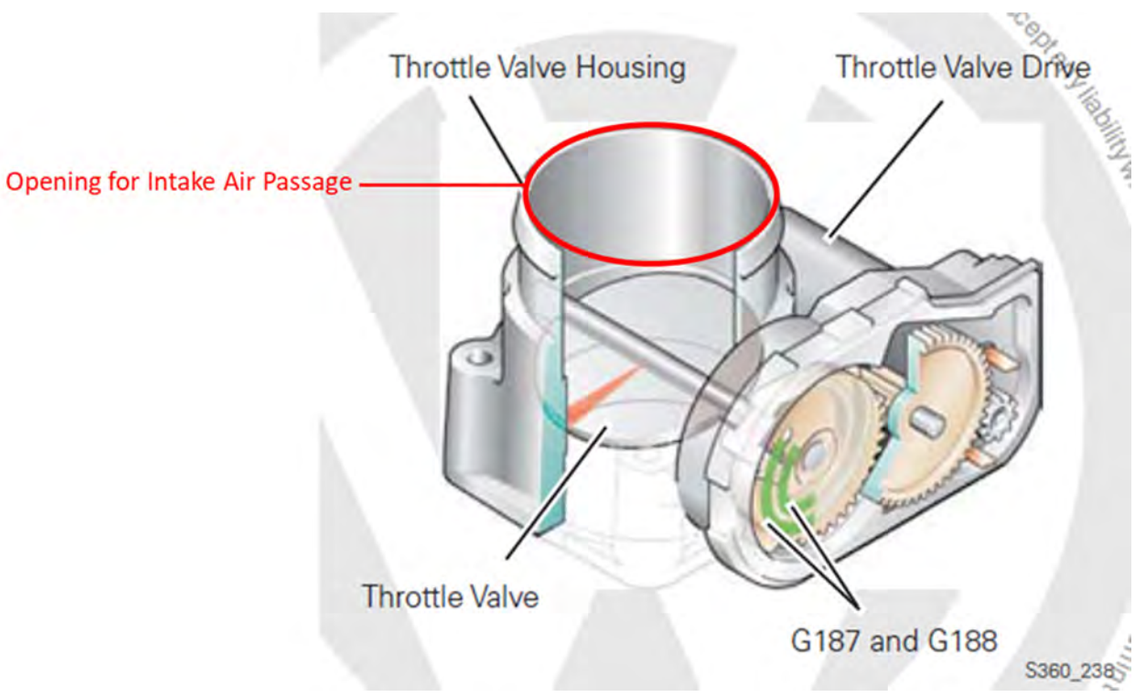

Figure 138

The Throttle Valve Drive is a throttle valve actuator motor connected to the throttle valve for activating the throttle valve between a closed position and a full-open position.

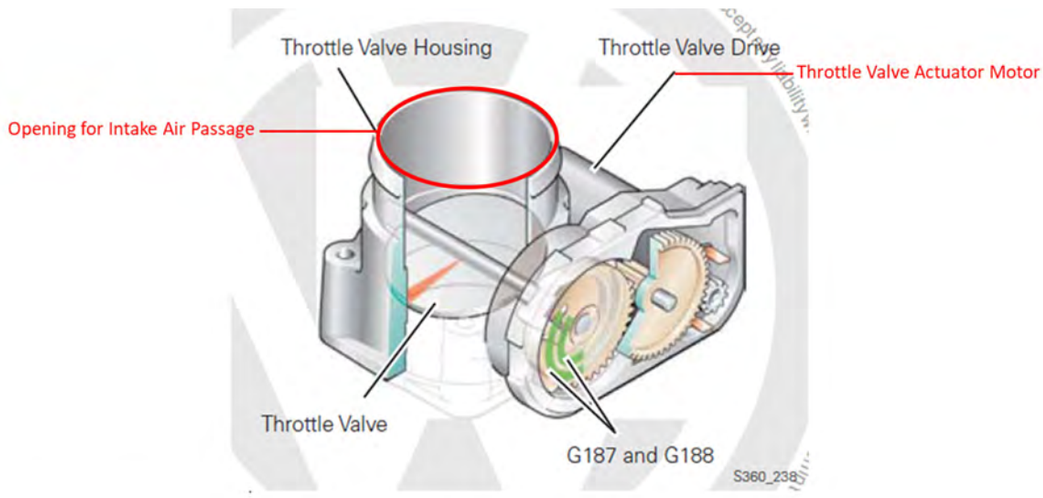

https://www.youtube.com/watch?v=sOKJ72HnL14

Exemplary throttle valve closed position

Exemplary throttle valve open position
8632
MORE VIDEOS

Figure 139

For example, as demonstrated in the exemplary images below, the ’604 patent Accused Instrumentalities comprise a Throttle Drive Angle Sensor 1 (G187) and Throttle Drive Angle Sensor 2 (G188) connected to the Throttle Valve Control Module (J338) and develop a position signal indicating the actual throttle valve position.

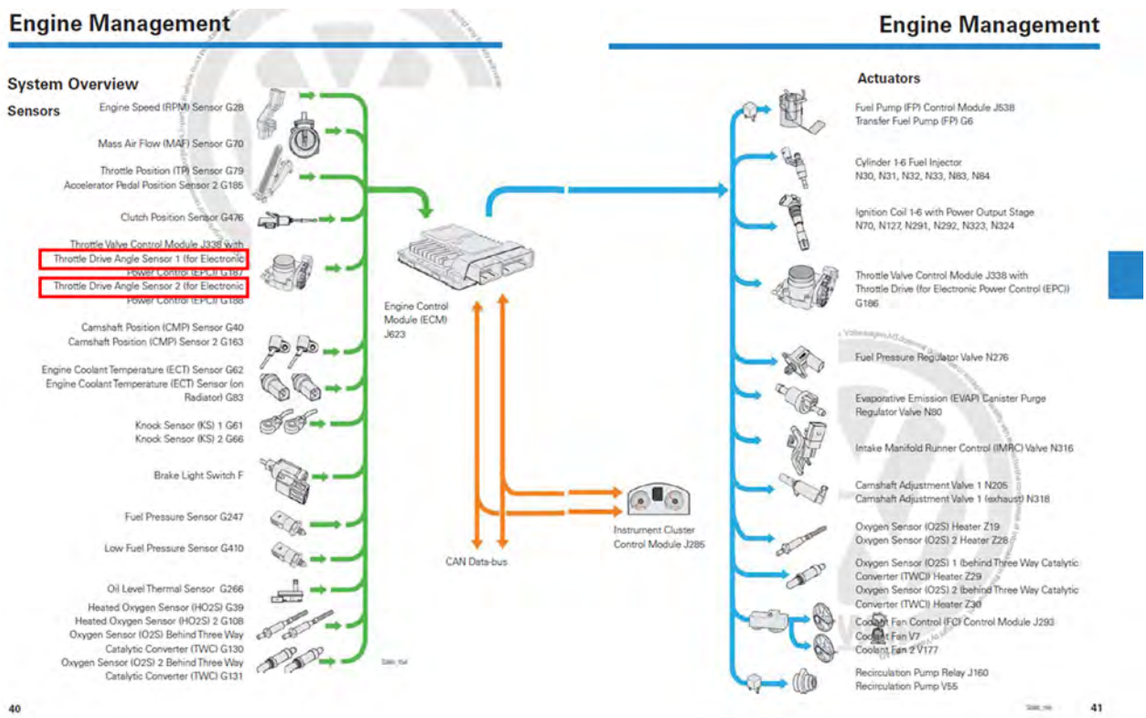

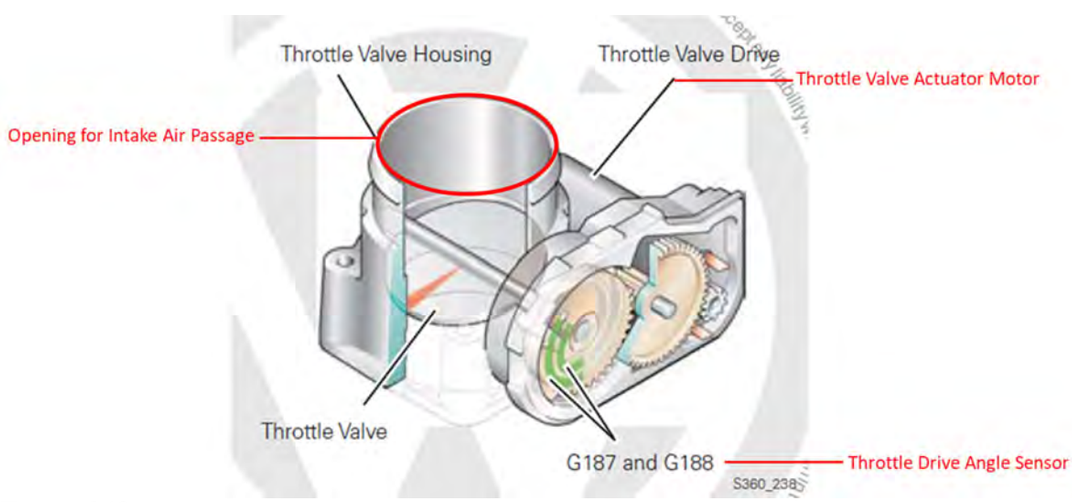

Figure 140

The ignition switch initiates engine start up (being switched on) and engine shutdown (being switched off).

Vehicle key positions in the ignition switch

Fig. 111 In the ignition switch: Vehicle key positions.

Please first read and note the introductory information and heed the WARNINGS

If there is no vehicle key in the ignition, the steering column is locked.

Vehicle key position ⇒ fig. 111

(0) Ignition switched off. Steering column lock engaged. The vehicle key can be removed.
(1) Ignition switched off. Steering column lock disengaged. Vehicle key can be removed.
(2) Ignition is switched on. Vehicle key can be removed from ignition switch.
(3) Start the engine. Once the engine has started, the vehicle key stays in this position. To remove the vehicle key, push it fully into the ignition switch. When released, the vehicle key returns to position (1) the engine is switched off.

If you use the wrong key

If an unauthorized vehicle key has been inserted into the ignition switch, it can be removed as follows:

- *Automatic transmission*: The vehicle key cannot be removed from the ignition unless both the key and the selector lever have been moved to the correct position. Press the release button on the transmission selector lever, move the selector lever to the Park **(P)** position, and release the button. The vehicle key can now be removed.
- *Manual transmission*: Pull out the vehicle key.

As evidenced by the vehicle notice below, once the engine has been switched off a signal is sent to the radiator fan to sufficiently cool the engine, the ’604 patent Accused Instrumentalities comprise a n ignition switch for initiating engine startup and engine shutdown and for developing an engine shutdown signal.

NOTICE

If the vehicle has been driven hard for a long time, the engine could overheat when it is stopped. To reduce the risk of engine damage, let the engine idle in Neutral for about 2 minutes before you switch off the ignition.

If the ignition is switched on or the engine is running and the driver door is opened, a chime sounds. The chime is also a reminder to switch off the engine and turn off the ignition before leaving and locking the vehicle from the outside.

On vehicles with automatic transmissions, the vehicle key can only be removed from the ignition when the transmission is in Park **(P)**.

After the engine has been switched off, the radiator fan in the engine compartment may keep running for several minutes, or may start running after the vehicle has been parked for a while, even if the ignition is switched off and the vehicle key has been removed. The radiator fan shuts off automatically when the engine has cooled down enough.

Figure 141

For example, as demonstrated in the exemplary images below, the ’604 patent Accused Instrumentalities comprise an accelerator pedal and an Accelerator Pedal Position Sensor 2 (G185) for developing an actual accelerator pedal position signal.

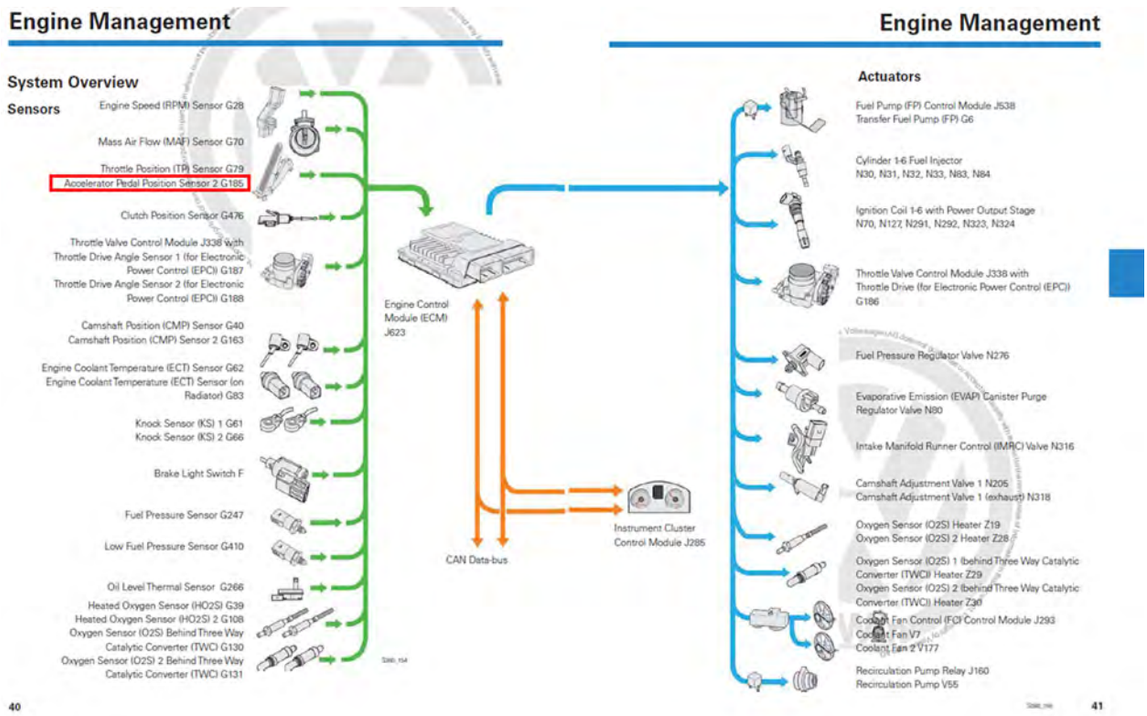

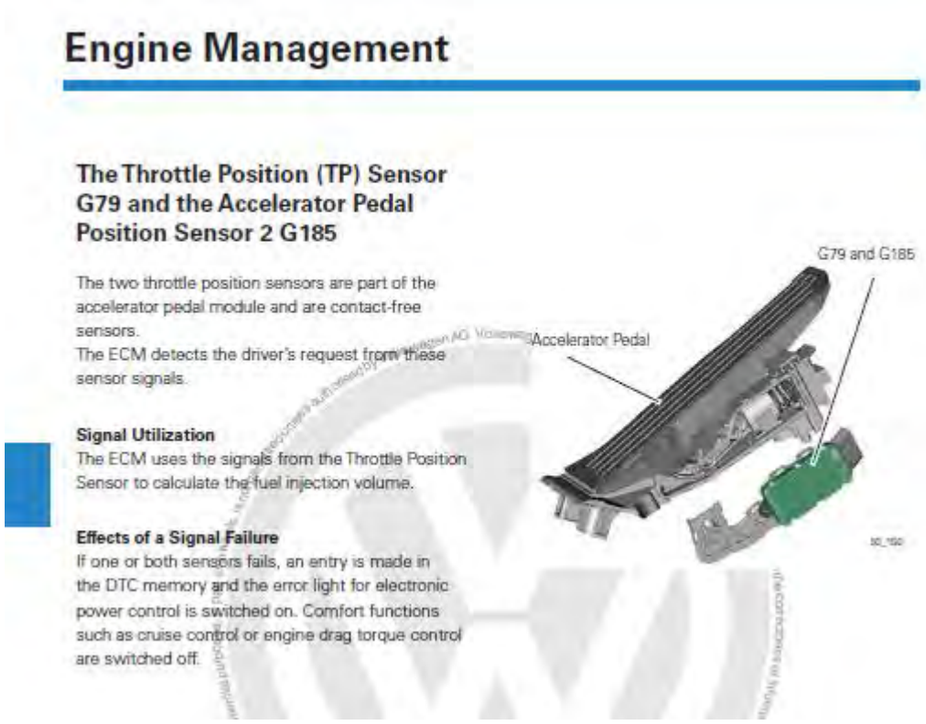

Engine Management

The Throttle Position (TP) Sensor G79 and the Accelerator Pedal Position Sensor 2 G185

The two throttle position sensors are part of the accelerator pedal module and are contact-free sensors.
The ECM detects the driver's request from these sensor signals.

Signal Utilization
The ECM uses the signals from the Throttle Position Sensor to calculate the fuel injection volume.

Effects of a Signal Failure
If one or both sensors fails, an entry is made in the DTC memory and the error light for electronic power control is switched on. Comfort functions such as cruise control or engine drag torque control are switched off.

Figure 142

The ’604 patent Accused Instrumentalities comprise an Engine Control Module (ECM; J623), which is an electronic microprocessor comprising an input signal conditioning circuit receiving the engine shutdown signal. The ignition shutdown signal informs the ECM that the throttle should be in a closed position.

Engine Management

The Throttle Drive Angle Sensor 1 G187 and Throttle Drive Angle Sensor 2 G188 in the Throttle Valve Control Unit

These sensors determine the current position of the throttle valve and send this information to the ECM.

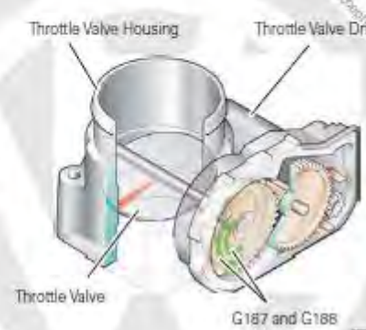

Signal Utilization
The ECM recognizes the position of the throttle valve from the angle sensors signals. The signals from the two sensors are redundant, meaning that both sensors provide the same signal.

Effects of a Signal Failure

Example 1

The ECM receives an implausible signal or no signal at all from an angle sensor:

- An entry is made in the DTC memory and the error light for electric throttle operation is switched on
- Systems which affect torque, (e.g. cruise control system or engine drag torque control), are switched off
- The load signal is used to monitor the remaining angle sensor
- The accelerator pedal responds normally

Example 2

The ECM receives an implausible signal or no signal from both angle sensors:

- An entry is made for both sensors in the DTC memory and the error light for electric throttle operation is switched on
- The throttle valve drive is switched off
- The engine runs only at an increased idle speed of 1,500 RPM and no longer reacts to the accelerator pedal

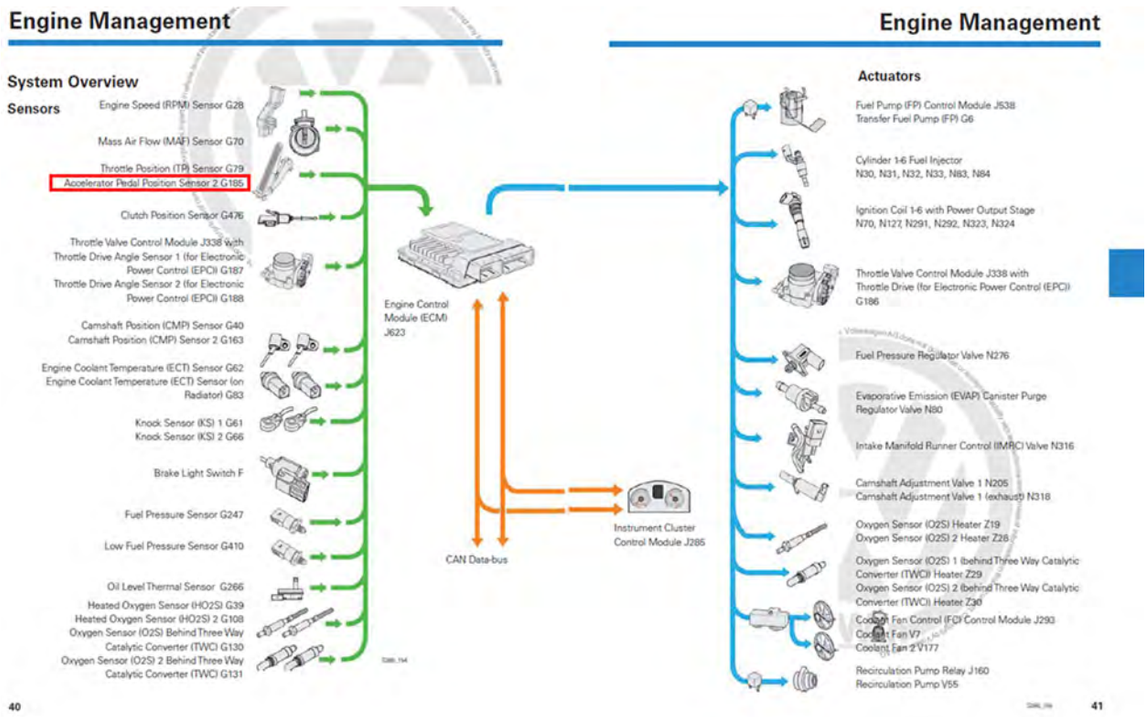

Figure 143

For example, as evidenced by the figures below, the Engine Control Module (ECM; J623) is an electronic microprocessor.

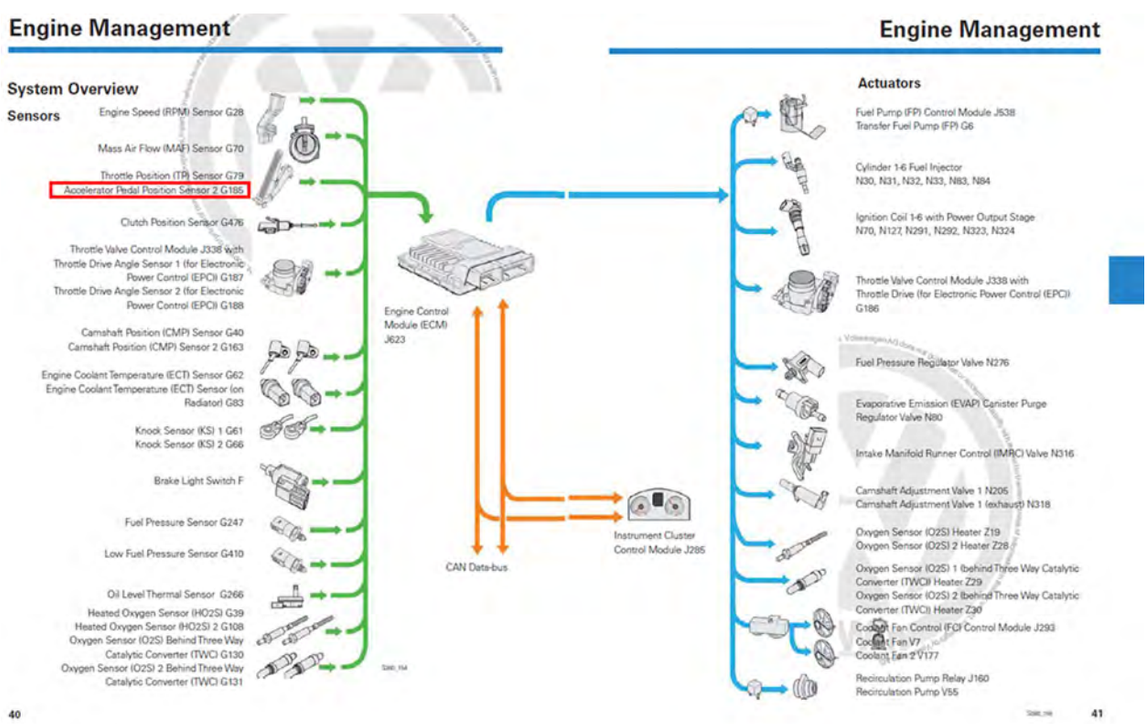

And the ECM includes a means for developing a throttle valve actuator motor control signal responsive to the presence of an engine shutdown.

Engine Management

The Throttle Drive Angle Sensor 1 G187 and Throttle Drive Angle Sensor 2 G188 in the Throttle Valve Control Unit

These sensors determine the current position of the throttle valve and send this information to the ECM.

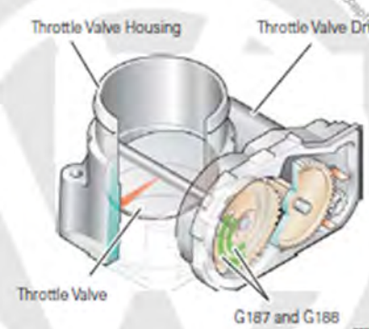

Signal Utilization
The ECM recognizes the position of the throttle valve from the angle sensors signals. The signals from the two sensors are redundant, meaning that both sensors provide the same signal.

Effects of a Signal Failure

Example 1

The ECM receives an implausible signal or no signal at all from an angle sensor:

- An entry is made in the DTC memory and the error light for electric throttle operation is switched on
- Systems which affect torque, (e.g. cruise control system or engine drag torque control), are switched off
- The load signal is used to monitor the remaining angle sensor
- The accelerator pedal responds normally

Example 2

The ECM receives an implausible signal or no signal from both angle sensors:

- An entry is made for both sensors in the DTC memory and the error light for electric throttle operation is switched on
- The throttle valve drive is switched off
- The engine runs only at an increased idle speed of 1,500 RPM and no longer reacts to the accelerator pedal

Whereby the Throttle Drive for Electronic Power Control (EPC) motor adjusts the throttle plate to a throttle plate position between closed (idle) to fully open (wide-open throttle position). As evidenced by DTC P0638 if the engine shutoff time is greater than five seconds there are three checks. The checks are indicative of an engine shutdown signal.

Throttle Drive for Electronic Power Control (EPC) G186

The Throttle Drive for Electronic Power Control is an electrical motor which operates the throttle valve through a gear mechanism.

The range of adjustment is stepless from idle to the wide-open throttle position.

Effects of a Failure
If the throttle drive fails, the throttle valve is automatically pulled to the emergency running position. An entry is made in the DTC memory and the error lamp for electronic power control is switched on.

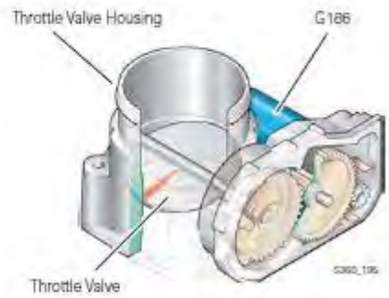

The throttle plate adjustment described above is performed to prevent throttle plate freezing when the engine is shut down.

2013 Volkswagen Passat Sedan (A32) V6-3.6L (CDVB)

Vehicle » A L L Diagnostic Trouble Codes (DTC) » Testing and Inspection » P Code Charts » P0638 » Engine Control Module, 2012 - 2014 MY

ENGINE CONTROL MODULE, 2012 - 2014 MY

Engine Control Module, 2012 - 2014 MY

DTC / Description	Monitor Strategy Description	Malfunction Criteria and Threshold Value	Secondary Parameters with Enable Conditions	Monitoring Time Length	MIL Illumination	Component Diagnostic Procedure
P0638 Throttle Actuator Control Range/Performance Bank 1	Throttle Actuator Control Rationality check close movement	Time to close to reference point > 0.6 s and reference point 2.88%	Engine speed 0 RPM Vehicle speed 0 MPH ECT > 5.0° C IAT @ manifold > 5.0° C CASE 1: Ignition on CASE 2: Engine shut-off-time > 5.0 s number of checks 3.00	5.00 s Multiple	2 DCY	Check the Throttle Valve Control Module (GX3) . Refer to ⇒ [Throttle Valve Control Module (GX3) Checking].
	Signal range check @ mechanical stop low	TPS 1 signal voltage 'NOT 0.40 - 0.80 V OR TPS 2 signal voltage 'NOT 4.20 - 4.60 V	Engine speed 0 RPM Vehicle speed 0 MPH CASE 1: Ignition on ECT 5.0 - 115° C IAT @ manifold 5.0 - 143° C CASE 2: Engine shut-off-time > 5.0 s ECT 5.0 - 115° C IAT @ manifold 5.0 - 143° C	0.30 s Multiple		

Figure 144

Based upon the totality of the foregoing evidence, and based further upon information and belief, the ’604 patent Accused Instrumentalities include “a throttle controller for an internal combustion engine having a throttle body including an adjustable throttle valve in an intake air passage; a throttle valve actuator motor connected to the throttle valve for activating the throttle valve between a closed position and a full-open position; a throttle position sensor connected to the throttle valve for developing a position signal indicating the actual throttle valve position; an ignition switch for initiating engine startup and engine shutdown and for developing an engine shutdown signal; an accelerator pedal and an accelerator position sensor for developing an actual accelerator pedal position signal; and an electronic microprocessor comprising an input signal conditioning circuit receiving the engine shutdown signal, the electronic microprocessor including means for developing a throttle valve actuator motor control signal responsive to the presence of an engine shutdown signal whereby the throttle valve actuator motor adjusts the throttle plate to a throttle plate position between the closed position and the fully open position to prevent throttle plate freezing when the engine is shut down.”

DIRECT INFRINGEMENT, INDIRECT INFRINGEMENT,

DAMAGES AND WILLFUL INFRINGEMENT

151. The allegations set forth in the foregoing paragraphs 1 through 150 are incorporated into this Twenty-First Claim for Relief.

152. Defendants were made aware of the patents-in-suit at least as early as March 4, 2015, when it was provided notice of the patents via letter.

153. Upon information and belief Defendants’ conduct in making, using, selling, offering to sell and/or importing the Accused Instrumentalities directly infringes at least claim 1 of the ’260 patent; claim 1 of the ’128 patent; claim 1 of the ’565 patent; claim 1 of the ’281 patent; claims 1 and 11 of the ’804 patent; claim 1 of the ’680 patent; claim 1 of the ’166 patent; claim 1 of the ’031 patent; claim 1 of the ’287 patent; claims 1 and 17 of the ’761 patent; claims 1-3 and 7 of the ’115 patent; claims 1 and 7 of the ’574 patent; claim 1 of the ’497 patent; claims 1 and 14 of the ’157 patent; claim 1 of the ’122 patent; claim 1 of the ’149 patent; claim 1 of the ’081 patent; claim 1 of the ’482 patent; claims 1, 7, 11, and 14 of the ’540 patent; and claim 1 of the ’604 patent pursuant to 35 U.S.C. § 271(a). Infringement of these representative claims is alleged solely for illustrative pleading purposes. Michigan Motor reserves the right to assert infringement of additional claims of the Patents-in-Suit as this action proceeds.

154. Upon information and belief, since at least the time of receiving this Amended Complaint, Defendants have induced and continue to induce others to infringe at least claim 1 of the ’260 patent; claim 1 of the ’128 patent; claim 1 of the ’565 patent; claim 1 of the ’281 patent; claims 1 and 11 of the ’804 patent; claim 1 of the ’680 patent; claim 1 of the ’166 patent; claim 1 of the ’031 patent; claim 1 of the ’287 patent; claims 1 and 17 of the ’761 patent; claims 1-3 and 7 of the ’115 patent; claims 1 and 7 of the ’574 patent; claim 1 of the ’497 patent; claims 1 and 14 of the ’157 patent; claim 1 of the ’122 patent; claim 1 of the ’149 patent; claim 1 of the ’081 patent; claim 1 of the ’482 patent; claims 1, 7, 11, and 14 of the ’540 patent; and claim 1 of the ’604 patent under 35 U.S.C. § 271(b) by, among other things, and with specific intent or willful blindness, actively aiding and abetting others to infringe, including but not limited to Defendant’s partners and customers, whose use of the Accused Instrumentalities constitutes direct infringement of at least the aforementioned claims. Infringement of these representative claims is alleged solely for illustrative pleading purposes. Michigan Motor reserves the right to assert infringement of additional claims of the Patents-in-Suit as this action proceeds.

155. In particular, Defendants’ actions that aid and abet others such as their partners and customers to infringe include distributing the Accused Instrumentalities and providing materials and/or services related to the Accused Instrumentalities. On information and belief, the Defendants have engaged in such actions with specific intent to cause infringement or with willful blindness to the resulting infringement because Defendants have had actual knowledge of the patents-in-suit and that its acts were inducing infringement of said patents since at least the time of receiving this Amended Complaint.

156. Upon information and belief, each Defendant is liable as a contributory infringer of the Patents-in-Suit under 35 U.S.C. § 271(c) by offering to sell, selling and importing into the United States the Accused Instrumentalities to be especially made or adapted for use in

infringement of the Patents-in-Suit. The Accused Instrumentalities are material components for use in practicing the Patents-in-Suit and are specifically made and are not a staple article of commerce suitable for substantial non-infringing use.

157. On information and belief, since Defendants received notice of the patents, Defendants' infringement has been and continues to be willful.

158. Michigan Motor has been harmed by the Defendants' infringing activities.

JURY DEMAND

Pursuant to Rule 38 of the Federal Rules of Civil Procedure, Plaintiff demands a trial by jury on all issues triable as such.

PRAYER FOR RELIEF

WHEREFORE, Plaintiff demands judgment for itself and against Defendants as follows:

A. An adjudication that Defendants have infringed the '260, '128, '565, '281, '804, '680, '166, '031, '287, '761, '115, '574, '497, '157, 122, '149, '081, '482, '540, and '604 patents;

B. An award of damages to be paid by Defendants adequate to compensate Plaintiff for Defendants' past infringement of the '260, '128, '565, '281, '804, '680, '166, '031, '287, '761, '115, '574, '497, '157, 122, '149, '081, '482, '540, and '604 patents;

C. and any continuing or future infringement through the date such judgment is entered, including interest, costs, expenses and an accounting of all infringing acts including, but not limited to, those acts not presented at trial;

D. A declaration that this case is exceptional under 35 U.S.C. § 285, and an award of Plaintiff's reasonable attorneys' fees; and

E. An award to Plaintiff of such further relief at law or in equity as the Court deems just and proper.

Dated: April 29, 2019

/s/ Eric A. Bean
Eric A. Bean
ebean@jackiergould.com
JACKIER GOULD, P.C.
121 West Long Lake Rd., Suite 200
Bloomfield Hills, MI 48304
Telephone: (248) 433-2577
Facsimile: (248) 642-5241

/s/ Timothy Devlin
Timothy Devlin (DE 4241)
Robyn T. Williams
tdevlin@devlinlawfirm.com
rwilliams@devlinlawfirm.com
DEVLIN LAW FIRM LLC
1306 N. Broom Street, First Floor
Wilmington, DE 19806
Telephone: (302)-449-9010

Attorneys for Plaintiff
MICHIGAN MOTOR TECHNOLOGIES LLC

Transaction History Date 2020-01-31
Date information retrieved from USPTO Patent Application Information Retrieval (PAIR) system records at www.uspto.gov

UNITED STATES PATENT AND TRADEMARK OFFICE

BEFORE THE PATENT TRIAL AND APPEAL BOARD

VOLKSWAGEN GROUP OF AMERICA, INC.
Petitioner

v.

MICHIGAN MOTOR TECHNOLOGIES LLC
Patent Owner

Case IPR2020-00445
Patent 6,581,565

PETITIONER VOLKSWAGEN GROUP OF AMERICA, INC.'S POWER OF ATTORNEY

Mail Stop "PATENT BOARD"
Patent Trial and Appeal Board
U.S. Patent and Trademark Office
P.O. Box 1450
Alexandria, VA 22313-1450

Pursuant to 37 C.F.R. § 42.10(b), Petitioner Volkswagen Group of America, Inc., hereby appoints the practitioners of Customer No. 26111 as its attorneys to transact all business in the United States Patent & Trademark Office associated with the above-captioned *inter partes* review of U.S. Patent No. 6,581,565.

These attorneys include at least:

Lead Counsel Michael D. Specht, Reg. No. 54,463
mspecht-PTAB@sternekessler.com

Back-up Counsel Jason A. Fitzsimmons, Reg. No. 65,367
jfitzsimmons-PTAB@sternekessler.com

Daniel E. Yonan, Reg. No. 53,812
dyonan-PTAB@sternekessler.com

Kyle Conklin, Reg. No. 59,425
dyonan-PTAB@sternekessler.com

John D. Higgins, Reg. No. 74,992
jhiggins-PTAB@sternekessler.com

Address STERNE, KESSLER, GOLDSTEIN & FOX P.L.L.C.
1100 New York Avenue, N.W.
Washington, D.C. 20005
Tel.: 202-371-2600
Fax: 202-371-2540

FOR: Volkswagen Group of America, Inc.
SIGNATURE: [signature]
BY: Charles Hawkins
TITLE: Assistant General Counsel IP & Litigation
DATE: December 9, 2019

UNITED STATES PATENT AND TRADEMARK OFFICE

BEFORE THE PATENT TRIAL AND APPEAL BOARD

VOLKSWAGEN GROUP OF AMERICA, INC.,
Petitioner

v.

MICHIGAN MOTOR TECHNOLOGIES LLC,
Patent Owner

Case IPR2020-00445
Patent 6,581,565

PETITIONER VOLKSWAGEN GROUP OF AMERICA, INC.'S NOTICE RANKING PETITIONS FOR *INTER PARTES* REVIEW OF U.S. PATENT NO. 6,581,565

Mail Stop "PATENT BOARD"
Patent Trial and Appeal Board
U.S. Patent & Trademark Office
P.O. Box 1450
Alexandria, VA 22313-1450

I. Introduction

Petitioner Volkswagen Group of America, Inc. (VWGoA) is simultaneously filing petitions IPR2020-00444 and IPR2020-00445 challenging the patentability of all claims in U.S. Patent No. 6,581,565 and asks the Board to institute both petitions. This paper is submitted with each petition to "identify: (1) a ranking of the petitions in the order in which it wishes the Board to consider the merits … , and (2) a succinct explanation of the differences between the petitions, why the issues addressed by the differences are material, and why the Board should exercise its discretion to institute additional petitions…." Consolidated Trial Practice Guide (Nov. 2019) at 60.

II. Ranking of the Petitions

Although institution of both petitions is appropriate for the reasons below, in view of the Board's guidance to provide a "ranking" when two or more petitions are filed against the same patent, VWGoA asks the Board to consider the merits of the petitions in the following order:

1. IPR2020-00444 ("Suzuki Petition"); and
2. IPR2020-00445 ("Robichaux Petition").

III. Succinct Explanation of Differences Between the Petitions

	Suzuki Petition	Robichaux Petition
Ground 1 References	Suzuki, Cullen, Scherer	Robichaux, Scherer
Ground 1: Primary	Suzuki discloses a torque	Robichaux discloses a torque

Reference Teaching	demand controller; a torque producer, including a torque estimator and a comparator that outputs a difference signal; and a transient torque controller	demand controller; a torque producer, including a torque estimator that determines estimated torque based on current spark angle, current air/fuel ratio, and an estimated air charge signal, and a comparator that outputs a difference signal
Ground 1: Modification by Secondary References	Cullen discloses estimating torque output based on current spark angle, current air/fuel ratio, and estimated air charge; Scherer discloses a high-pass filter that removes a torque signal's low-frequency component	Scherer discloses a transient controller, including a high-pass filter, for adjusting torque during transient conditions
Additional Grounds: Modification of Ground 1 by Secondary References	Ground 2: Takahashi discloses an air charge controller that receives the claimed inputs and an air charge demand controller	Ground 2: Takahashi discloses an air charge controller that receives the claimed inputs and air charge demand controller Ground 3: Suzuki discloses a direct injection spark ignition engine operating in stratified and homogeneous modes Ground 4: Suzuki and Takahashi for same reasons as Grounds 2 and 3

IV. The Board should exercise its discretion to institute both petitions because the equities favor VWGoA and doing so would not significantly burden the Board or Patent Owner.

VWGoA simultaneously files the Suzuki Petition and the Robichaux Petition against claims 1-7 of the ’565 patent. While the Board has the discretion to deny multiple petitions filed against the same patent under Section 314(a), it should institute both petitions here because every *General Plastic* factor weighs in VWGoA’s favor. 37 C.F.R. § 314(a); *see General Plastic Industrial Co., Ltd. v. Canon Kabushiki Kaisha*, IPR2016-01357, Paper 19 at 5 (P.T.A.B. Sep. 6, 2017) (precedential).

First, the two simultaneous petitions here do not present the potential inefficiency or prejudice that concerned the Board in *General Plastic*, which examined so-called “staggered” or “follow-on” petitions that are not filed simultaneously. *General Plastic*, Paper 19 at 17. Here, the two petitions are being filed on the same day, and no entity, including VWGoA, has filed a previous petition against the ’565 patent. Thus, no time has elapsed between petitions and VWGoA has not gained any advantage by using earlier preliminary responses or institution decisions as a “roadmap” for its petitions. *See id.* at 16-17. Accordingly, *General Plastic* Factors 1–5 weigh in favor of VWGoA. *Id.*

Second, regarding *General Plastic* Factor 6, the Board’s finite resources, the Board has provided further guidance on “parallel” petitions filed at or about the

same time. Consolidated Trial Practice Guide at 59-61. Specifically, the Board's concern that filing two or more petitions against the same patent "may place a substantial and unnecessary burden on the Board and the patent owner and could raise fairness, timing, and efficiency concerns" is not present here. *Id.* at 59. Here, VWGoA is filing only two petitions, each with a single "primary reference" (Suzuki and Robichaux, respectively). Thus, VWGoA is not presenting an excessive number of prior-art references by filing two separate petitions. Further, even with the two petitions, each claim is only challenged under two grounds, which will not be unduly burdensome for the Board or Patent Owner. To further illustrate the minimal burden in moving forward with both petitions, both petitions apply Scherer, Suzuki, and Takahashi. Notably, though, this similarity does not make the petitions redundant because the base references are different in each petition. Instead, this similarity further indicates that there is no excessive burden on the Board or Patent Owner in instituting a second trial. On balance, the incremental burden on the Board or Patent Owner is significantly outweighed by the potential prejudice to Petitioner VWGoA from a discretionary denial of an *inter partes* review against a patent it was accused of infringing.

Accordingly, *General Plastic* Factor 6 weighs in favor of instituting both petitions.

Third, *General Plastic* Factor 7 also favors VWGoA because these two petitions are being filed on the same day, and thus their respective schedules (or schedule if consolidated) may be aligned and will not hinder the Board's ability to issue a final determination within one year of institution. Indeed, VWGoA would be amenable to consolidated depositions and hearings in these two proceedings, further minimizing any burden on the Board and Patent Owner.

Thus, all *General Plastic* Factors weigh in VWGoA's favor so "the potential for abuse of the review process by repeated attacks on patents"—the concern expressed in *General Plastic*—is not an issue here. *General Plastic*, Paper 19 at 17.

V. Conclusion

Because all seven *General Plastic* factors weigh in favor of VWGoA, the Board should institute both petitions and thus decline to use its discretion to deny institution of either petition under Section 314(a).

Respectfully Submitted,

STERNE, KESSLER, GOLDSTEIN & FOX P.L.L.C.

/Michael D. Specht/

Michael D. Specht (Reg. No. 54,463)
Attorney for Petitioner
Volkswagen Group of America, Inc.

Date: January 31, 2020

1100 New York Avenue, N.W.
Washington, D.C. 20005-3934
(202) 371-2600

CERTIFICATION OF SERVICE (37 C.F.R. § 42.6(e))

The undersigned hereby certifies that on January 31, 2020 a true and correct copy of the foregoing **PETITIONER VOLKSWAGEN GROUP OF AMERICA, INC.'S NOTICE RANKING PETITIONS FOR *INTER PARTES* REVIEW OF U.S. PATENT NO. 6,581,565** was served in its entirety on the following parties via FedEx® Express:

VISTEON GLOBAL
TECHNOLOGIES, INC.
Intellectual Property Department
One Village Center Drive
Van Buren Township, MI 48111
PAIR Correspondence Address for US Patent No. 6,581,565

DEVLIN LAW FIRM LLC
1526 Gilpin Avenue
Wilmington, DE 19806
Other address known to the petitioner as likely to effect service

STERNE, KESSLER, GOLDSTEIN & FOX P.L.L.C.

/Michael D. Specht/

Michael D. Specht (Reg. No. 54,463)
Attorney for Petitioner
Volkswagen Group of America, Inc.

Date: January 31, 2020

1100 New York Avenue, N.W.
Washington, D.C. 20005-3934
(202) 371-2600

14284979.docx

UNITED STATES PATENT AND TRADEMARK OFFICE

BEFORE THE PATENT TRIAL AND APPEAL BOARD

VOLKSWAGEN GROUP OF AMERICA, INC.,
Petitioner

v.

MICHIGAN MOTOR TECHNOLOGIES, LLC,
Patent Owner

Case IPR2020-00445
Patent 6,581,565

PETITION FOR *INTER PARTES* REVIEW
OF U.S. PATENT NO. 6,581,565

Mail Stop PATENT BOARD
Patent Trial and Appeal Board
U.S. Patent & Trademark Office
P.O. Box 1450
Alexandria, VA 22313-1450

TABLE OF CONTENTS

I. Introduction 1

II. Mandatory Notices (37 C.F.R. § 42.8(a)(1)) 2

III. Grounds for Standing (37 C.F.R. § 42.104(a)) 3

IV. Identification of Challenge (37 C.F.R. § 42.104(b)) 4

A. Citation of Prior Art 4

B. Statutory Grounds for the Challenge 5

V. The ’565 Patent 5

A. Technology Overview 5

1. Torque Feedback Control 5

2. Engine Parameter Estimation Techniques 8

3. Low- and High-Frequency Demanded Torque Components 10

4. DISI Engines Having Two Combustion Modes 11

B. Alleged Problem in the Prior Art 14

C. Alleged Invention of the ’565 Patent 14

D. Prosecution History Summary 16

E. Level of Ordinary Skill in the Art 16

F. Claim Construction 17

VI. Overview of the Applied References 17

A. Robichaux 18

B. Scherer 20

C. Takahashi 22

D. Suzuki 24

VII. Ground 1: The combination of Robichaux and Scherer renders obvious claims 1 and 7. 26

A. The Board should not deny the institution under Section 325(d) because the Office did not consider the straightforward combination of references applied here. 26

B. Rationale for Combining Robichaux with Scherer 30

C. Robichaux and Scherer render obvious claim 1.....36

1. [1.P] "A device for controlling a torque output of an engine, the device comprising:".....36
2. [1.A] "a torque demand controller for generating a torque demand signal" 38
3. [1.B] "a torque producer which receives the torque demand signal".....40
4. [1.C] "the torque producer includes: an estimator which receives as inputs a current spark angle signal, a current air/fuel ratio signal and an estimated air charge signal and outputs an estimated torque signal" 43
5. [1.D] "a comparator which receives as inputs the estimated torque signal and a desired torque signal and outputs a difference signal" 45
6. [1.E] "a high pass filter which receives as an input the difference signal and outputs a filtered difference signal in which low frequency components are absent" 47
7. [1.F] "a transient torque controller which receives as an input the filtered difference signal and outputs a fuel adjustment signal and a spark adjustment signal".....51

D. Robichaux and Scherer render obvious claim 7.....54

1. [7.P] "A method for controlling a torque output of an engine, the method comprising:".....54
2. [7.A] "estimating a current torque signal from a received current spark angle signal, a received current air/fuel ratio signal and a received estimated air charge signal".....55
3. [7.B] "comparing the estimated current torque signal with a desired torque signal to output a difference signal" 56
4. [7.C] "filtering out a plurality of low frequency components from the difference signal" 56
5. [7.D] "controlling a fuel adjustment signal and a spark adjustment signal in dependence upon a filtered difference signal" 57

VIII. Ground 2: The combination of Robichaux, Scherer, and Takahashi renders obvious claims 2 and 3.....58

A. Rationale for Combining Robichaux, Scherer, and Takahashi.....58

B. Robichaux, Scherer, and Takahashi render obvious claim 2. 65

C. Robichaux, Scherer, and Takahashi render obvious claim 3. 72

IX. Ground 3: The combination of Robichaux, Scherer, and Suzuki renders claim 4 obvious. 75

A. Rationale for Combining Robichaux, Scherer, and Suzuki 75

B. Robichaux, Scherer, and Suzuki render obvious claim 4. 80

1. [4.A] "The device of claim 1, in which the engine is a direct injection spark ignition engine, wherein the transient torque controller is arranged to receive a combustion mode signal indicating whether the engine is operating in a stratified mode or a homogeneous mode" 80

2. [4.B] "wherein the transient torque controller is arranged to control the fuel adjustment signal when the combustion mode signal indicates that the engine is operating in the stratified mode" 85

1. [4.C] "wherein the transient torque controller is arranged to control the spark adjustment signal when the combustion mode signal indicates that the engine is operating in the homogeneous mode" 87

X. Ground 4: The combination of Robichaux, Scherer, Suzuki, and Takahashi renders obvious claims 5 and 6. 89

A. Rationale for Combining Robichaux, Scherer, Suzuki, and Takahashi 89

B. Robichaux, Scherer, Suzuki, and Takahashi render obvious claim 5. 91

C. Robichaux, Scherer, Suzuki, and Takahashi render obvious claim 6. 92

XI. Conclusion 95

PETITIONER'S EXHIBIT LIST

Exhibit No.	Description
1001	U.S. Patent No. 6,581,565 B2 to Heslop *et al*. ("'565 Patent")
1002	Prosecution File History of U.S. Patent No. 6,581,565 B2 ("'565 history")
1003	Declaration of C. Arthur MacCarley, Ph.D., P.E.
1004	Curriculum Vitae of C. Arthur MacCarley, Ph.D., P.E.
1005	U.S. Patent No. 6,006,717 A to Suzuki *et al.*, titled "Direct-Injection Spark-Ignition Type Engine Control Apparatus," issued December 28, 1999 ("Suzuki")
1006	U.S. Patent No. 5,241,855 A to Cullen *et al.*, titled "Method and Apparatus for Inferring Engine Torque," issued September 7, 1993 ("Cullen")
1007	U.S. Patent No. 6,07,681 A to Scherer *et al.*, titled "Process and Apparatus for Adjusting the Torque of an Internal-Combustion Engine," issued April 11, 2000 ("Scherer")
1008	U.S. Patent No. 5,282,449 A to Takahashi *et al.*, titled "Method and System for Engine Control," issued February 1, 1994 ("Takahashi")
1009	"Bosch Fuel Injection Systems," F. Aird, Berkeley Publishing Group, 2001, ISBN 1-55788-365-3 ("Aird")
1010	U.S. Patent No. 6,209,519 B1 to Melchior *et al.*, titled "Method and Arrangement for Controlling the Quiet Running of an Internal Combustion Engine," issued April 3, 2001 ("Melchior")
1011	U.S. Patent No. 5,692,471 A to Zhang, titled "Method and Arrangement for Controlling a Vehicle," issued December 2, 1997 ("Zhang")
1012	"Bosch Automotive Handbook," Robert Bosch GmbH, 2000, ISBN 0-7680-0669-4 ("Bosch")
1013	*Intentionally Left Blank*
1014	John B. Heywood, Internal Combustion Engine Fundamentals, 1st Ed. McGraw-Hill, Inc., 1988. ("Heywood")

Exhibit No.	Description
1015	Ronald K. Jurgen, "Automotive Electronics Handbook," McGraw-Hill, Inc., ISBN0-07-033189-8, c.1994 (selected portions) ("Jurgen")
1016-1018	*Intentionally Left Blank*
1019	Understanding Automotive Electronics, Fifth Edition (1998), William B. Ribbens, Ph.D. ("Ribbens")
1020	European Patent Application Pub. No. EP 1 076 165 A2 to Robichaux *et al.*, titled "System and Method for Controlling Engine Torque," published February 14, 2001 ("Robichaux")
1021-1028	*Intentionally Left Blank*
1029	Amended Complaint for Patent Infringement, Michigan Motor Technologies LLC v. Volkswagen AG, Case No. 2:19-cv-10485 (E.D. Mich.), filed April 30, 2019
1030	*Intentionally Left Blank*

I. Introduction

Volkswagen Group of America, Inc. ("VWGoA") petitions for *inter partes* review of claims 1-7 of U.S. Patent No. 6,581,565 to Heslop *et al.* (EX1001, "the '565 patent"), titled "Engine Torque Controller."

The '565 patent is directed to a device and a method for controlling the engine torque output. The '565 patent broadly claims controlling engine torque output by fuel and spark adjustments that compensate for the difference between a demanded torque and an estimated torque. The claims recite basic, well-known components of an engine controller: a controller for determining a demand torque, an estimator for outputting an estimated torque signal, a comparator for comparing the estimated torque signal to a desired torque to output a difference signal, a high-pass filter for removing the low-frequency component from the difference signal, and a transient controller for outputting fuel and spark adjustment signals in response to receiving the filtered difference signal.

The claimed solution for compensating between estimated and demand torques was well-known. Indeed, the claimed elements were all independently known in the prior art. And combining the prior art references would have simply involved programming a known engine torque controller to collectively perform the prior art techniques disclosed in the references—a trivial task for a person of ordinary skill in the art ("POSA"). As the prior art recognizes, a POSA would

have sought to do so to precisely control an engine's torque output with a faster and more accurate response.

The Petition, supported by Dr. MacCarley's expert declaration, who has over 30 years of experience related to internal combustion engines and methods and systems of controlling them, demonstrates that the '565 patent claims are unpatentable. Therefore, Petitioner respectfully requests that the Board institute review and ultimately find all claims unpatentable.

II. Mandatory Notices (37 C.F.R. § 42.8(a)(1))

REAL PARTY IN INTEREST: Volkswagen Group of America, Inc. and Volkswagen Aktiengesellschaft, which is the parent corporation of Volkswagen Group of America, Inc., are real parties-in-interest.

RELATED MATTERS: The '565 patent was the subject of the following civil action: *Michigan Motor Technologies LLC v. Volkswagen AG*, Case No. 2:19-cv-10485 (E.D. Mich.), filed February 18, 2019. However, on January 6, 2020, MMT filed a second amended complaint, which no longer alleged infringement of the '565 patent. Second Amended Complaint for Patent Infringement, *Michigan Motor Technologies LLC v. Volkswagen AG*, No. 2:19-cv-10485 (E.D. Mich. Jan. 6, 2020).

Petitioner is concurrently filing a second Petition for *Inter Partes* Review of the '565 Patent (IPR2020-00444).

LEAD AND BACKUP COUNSEL: Under 37 C.F.R. § 42.8(b)(3) and 42.10(a), Petitioner appoints **Michael D. Specht** (Reg. No. 54,463) as lead counsel, **Jason A. Fitzsimmons** (Reg. No. 65,367) as first back-up counsel, **Danny E. Yonan** (Reg. No. 53,812) **Kyle E. Conklin** (Reg. No. 59,425); and **John Higgins** (Reg. No. 74,992) as additional back-up counsel, all at the address: STERNE, KESSLER, GOLDSTEIN & FOX P.L.L.C., 1100 New York Avenue, N.W., Washington, D.C., 20005, phone (202) 371-2600, and facsimile (202) 371-2540.

SERVICE INFORMATION: Petitioner consents to electronic service by email at: **mspecht-PTAB@sternekessler.com**, **jfitzsimmons-PTAB@sternekessler.com**, **dyonan-PTAB@sternekessler.com**, **kconklin-PTAB@sternekessler.com**, **jhiggins-PTAB@sternekessler.com**, and **PTAB@sternekessler.com**.

III. Grounds for Standing (37 C.F.R. § 42.104(a))

The undersigned and Petitioner certify that the '565 patent is available for *inter partes* review. Petitioner is not barred or estopped from requesting *inter partes* review on the grounds herein. On February 18, 2019, Michigan Motor Technologies LLC ("MMT") filed a complaint against Volkswagen Aktiengesellschaft, alleging infringement of the '565 patent. VWGoA was added via an amended complaint on April 30, 2019. A Certificate of Service on VWGoA

was filed with the court on May 22, 2019. This Petition is filed within one year of service by MMT.

IV. Identification of Challenge (37 C.F.R. § 42.104(b))

A. Citation of Prior Art

The ’565 patent issued June 24, 2003, from U.S. Application No. 10/191,641, which was filed July 9, 2002. EX1001, (21), (22), (45). The ’565 patent claims priority to European Application No. 01306301, filed July 23, 2001. Thus, the ’565 patent’s earliest possible priority date is July 23, 2001.

European Patent Application Publication No. 1076165 to Robichaux *et al.*, “System and Method for Controlling Torque” (EX1020, “Robichaux”), published February 14, 2001, before the ’565 patent’s earliest possible priority date. Robichaux is prior art at least under 35 U.S.C. § 102(a) (pre-AIA).

U.S. Patent No. 6,047,681 to Scherer *et al.*, “Process and Apparatus for Adjusting the Torque of an Internal-Combustion Engine” (EX1007, “Scherer”), issued April 11, 2000, more than one year before the ’565 patent’s earliest possible priority date. Scherer is prior art at least under 35 U.S.C. § 102(b) (pre-AIA).

U.S. Patent No. 5,282,449 to Takahashi *et al.*, “Method and System for Engine Control” (EX1008, “Takahashi”), issued February 1, 1994, more than seven years before the ’565 patent’s earliest possible priority date. Takahashi is prior art at least under 35 U.S.C. § 102(b) (pre-AIA).

U.S. Patent No. 6,006,717 to Suzuki *et al.*, "Direct-Injection Spark-Ignition Type Engine Control Apparatus" (EX1005, "Suzuki"), issued December 28, 1999, more than one year before the '565 patent's earliest possible priority date. Suzuki is prior art at least under 35 U.S.C. § 102(b) (pre-AIA).

B. Statutory Grounds for the Challenge

Ground	References	Basis	Claims Challenged
1	Robichaux, Scherer	§103	1, 7
2	Robichaux, Scherer, Takahashi	§103	2, 3
3	Robichaux, Scherer, Suzuki	§103	4
4	Robichaux, Scherer, Suzuki, Takahashi	§103	5, 6

V. The '565 Patent

A. Technology Overview

1. Torque Feedback Control

Long before the '565 patent, using torque feedback control via an engine controller was common practice. EX1003, ¶¶42-44; EX1012, 498; EX1019, 224.

As the '565 patent recognizes, an engine controller typically includes a demand torque controller and a torque feedback controller (i.e., a torque producer). EX1001, 1:11-15; EX1005, 3:10-22; EX1012, 507; EX1003, ¶45. The demand torque controller generates a demand torque signal based on engine

operational changes, such as a depressed accelerator pedal. EX1003, ¶45, EX1001, 1:11-15; EX1005, 4:48-58, EX1012, 507. The torque producer receives the torque demand signal and, in response, adjusts the engine's torque output by modifying, for example, the air supply, the fuel supply, or the spark timing, so that the output torque meets the demand torque. EX1003, ¶45; EX1001, 1:11-15; EX1005, 3:5-22; EX1012, 452, 498, 507.

Robichaux's prior-art engine controller includes a torque demand controller and a torque producer. EX1003, ¶46; EX1020, ¶¶0023, 0025, FIG. 2.

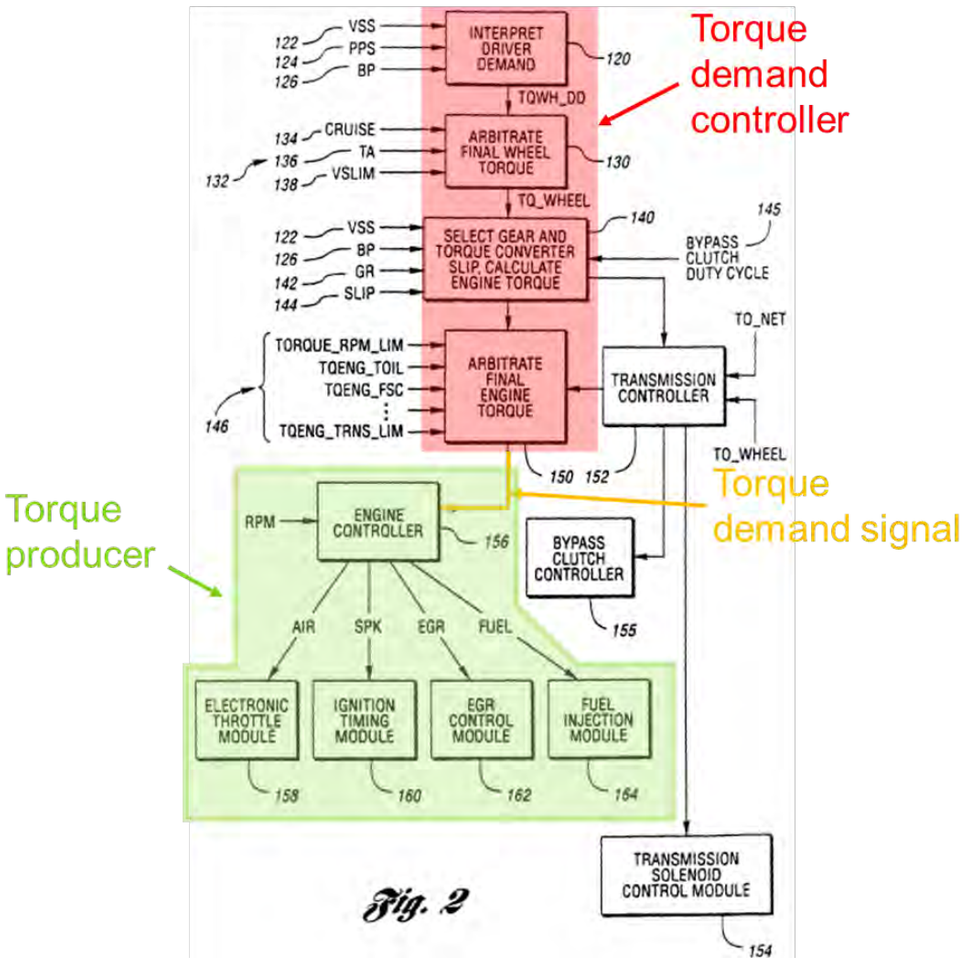

EX1020, FIG. 2 (annotated).

Using feedback control to align the produced torque with the demand torque was common before the ’565 patent. EX1003, ¶47; EX1005, 1:7-17, EX1012, 498, 503, 507, 508; EX1020, ¶¶0001, 0006, 0008, FIGS. 1-2. This alignment typically included estimating a current torque output and modifying engine parameters (e.g., spark timing and air/fuel ratio) to converge the estimated torque to the demand torque. EX1003, ¶47; EX1005, 1:7-16; EX1012, 503, 504, 507, 508;

EX1020, ¶¶0034, 0036. Robichaux also discloses a prior-art technique for controlling torque output that compensates for the difference between demand torque and the estimated actual output torque. EX1020, FIG. 4.

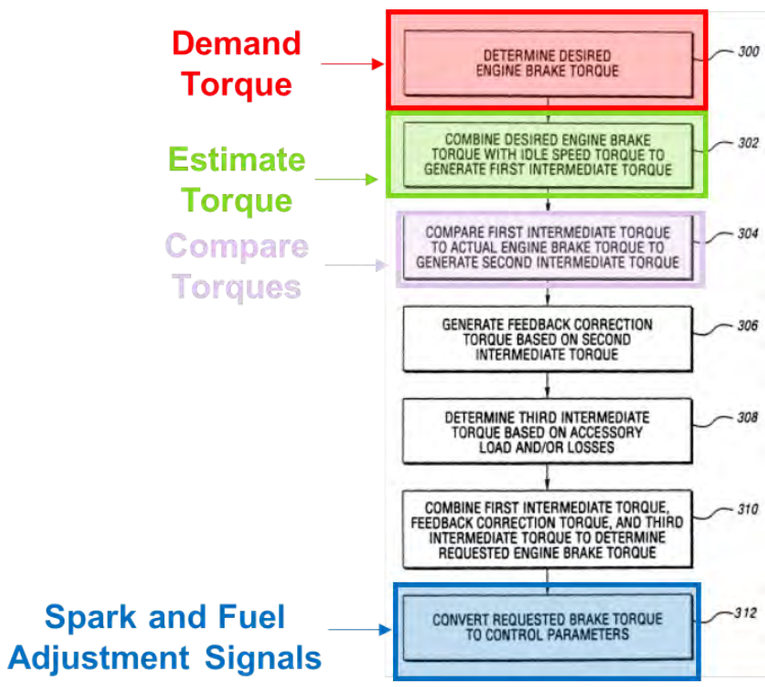

EX1020, FIG. 4 (annotated).

2. Engine Parameter Estimation Techniques

Estimating engine parameters (e.g., current output torque and cylinder air charge) was also common for executing feedback torque control before the ’565 patent. EX1003, ¶48.

Because direct real-time engine torque measurement was challenging and expensive, engine controllers typically estimated the current output torque based

on numerous engine operational parameters that influence actual torque output. EX1003, ¶49; EX1005, 4:48-57, EX1006, 2:26-42; EX1011, 2:58-67.

Robichaux discloses a prior-art technique for calculating an estimated actual torque output. EX1003, ¶50; EX1020, ¶¶0008, 0025, FIGS. 1-2. Robichaux uses "current engine operating parameters including ignition angle, air/fuel ratio, number of cylinders,…engine speed, airflow" as inputs for estimating the engine torque output. EX1020, ¶0033. Robichaux's control system "more accurately compensate[d] for current operating conditions such as additional frictional losses…and for variable accessory losses which correct for variations between desired and actual torque using a torque feedback signal." *Id.*, ¶0008.

Another common input for estimating torque was air charge—the air mass drawn into the engine cylinder. EX1003, ¶51; EX1006, 5:32-52; EX1008, 3:42-53; EX1012, 452, 501-02; EX1015, 12.6; EX1019, 176. Because directly measuring the cylinder's air mass is not feasible, engine controllers estimate the current air charge. EX1012, 503; EX1014, 294-96; EX1015, 12.6; EX1019, 176-77; EX1003, ¶¶51-52.

Additionally, Takahashi's prior-art air charge controller calculates an estimated air charge. EX1003, ¶53. Takahashi's status-estimating block calculates air charge based on intake pressure P_m, engine speed N, and a correction

coefficient k_a determined from current intake temperature. EX1008, 10:54-66, FIG. 15.

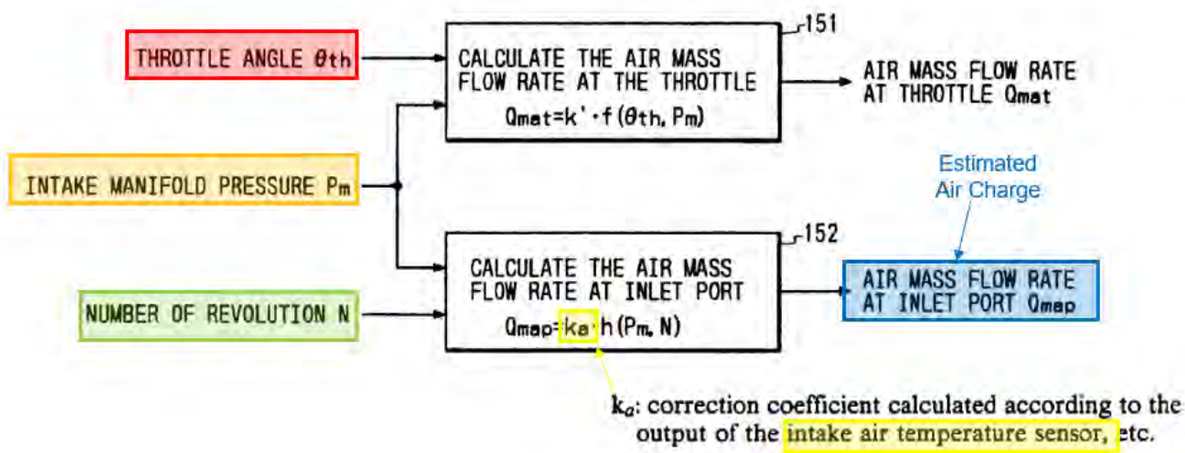

EX1008, FIG. 15 (annotated).

3. Low- and High-Frequency Demanded Torque Components

It was well-known that demanded torque includes low- and high-frequency components. EX1003, ¶54. The low-frequency component represents changes in torque demand during quasi-static conditions (e.g., idle-speed control), and the high-frequency component represents changes in torque demand during transient-state conditions (e.g., depressed accelerator pedal, shifted transmission gear, air conditioner initiation). *Id.*; EX1005, 4:48-55; EX1007, 1:25-29; EX1012, 478, 505.

It was also well-known that the high-frequency component of demanded torque was not adequately addressed with only throttle adjustment. EX1003, ¶55;

EX1005, 1:13-17 ("In order to achieve the target torque, the torque control…requires a faster response than intake air flow rate control can provide."); EX1007, 1:22-26. Accordingly, control systems addressed dynamic torque demands by isolating the transient component from the demand torque signal. EX1003, ¶¶55-56; EX1007, 2:38-3:10. For example, Scherer's prior-art transient torque control system includes a high-pass filter that isolates and provides the transient torque component to a torque controller, expediting the torque correction response time. EX1007, 4:20-52, 5:10-15.

4. DISI Engines Having Two Combustion Modes

DISI engines were well-known for decades before the '565 patent. EX1003, ¶57; EX1009, 19-21, 26, 30-32. A DISI engine typically includes an air intake and an adjustable throttle valve for controlling the air volume drawn through the intake. EX1003, ¶57; EX1005, 3:23-31, FIG. 2. Each DISI engine cylinder includes a fuel injector for injecting fuel directly into the combustion chamber and a spark plug for igniting the cylinder's air/fuel mixture. EX1003, ¶58; EX1005, 3:23-51, FIG. 2.

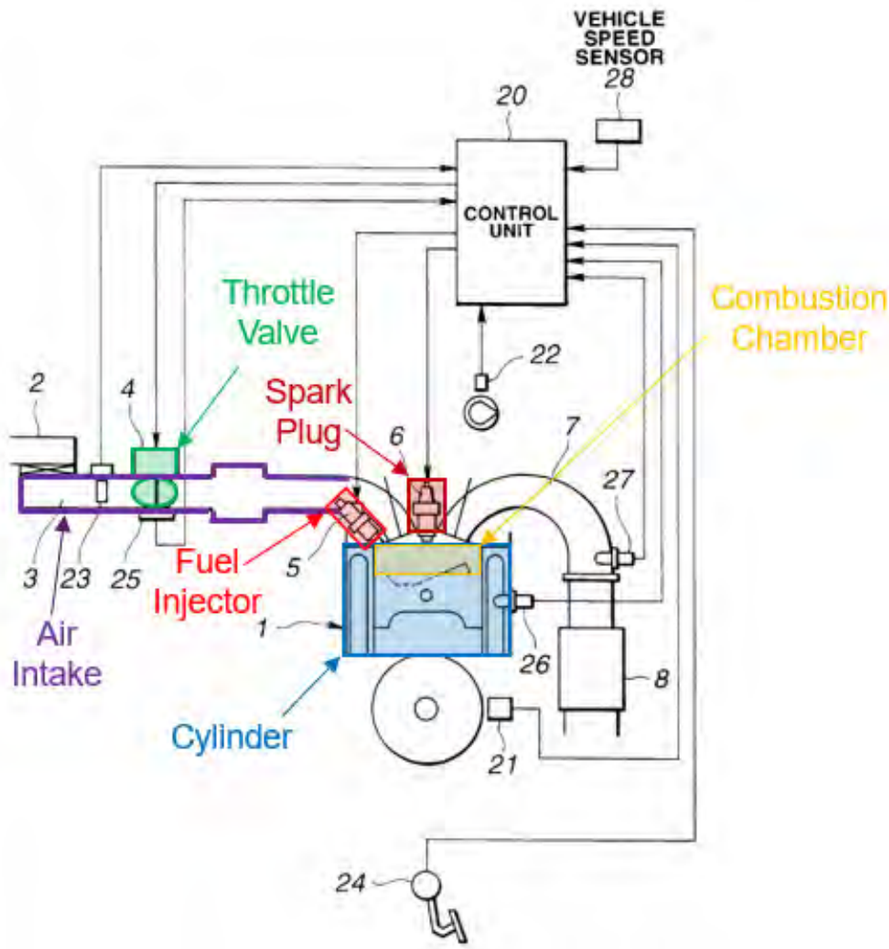

EX1005, FIG. 2 (annotated).

Operating DISI engines in either a stratified mode or a homogenous mode was well-known before the ’565 patent. EX1003, ¶59; EX1005, 1:18-28; EX1012, 464, 509; EX1014, 37-38. In the homogenous mode, fuel is injected during the intake stroke, allowing maximum time for air and fuel to combine evenly throughout the combustion chamber. EX1003, ¶59; EX1005, 1:18-28; EX1012, 464. In the stratified mode, fuel is injected during the compression stroke, providing a stoichiometric mixture near the spark plug, while the overall mixture

in the combustion chamber is lean. EX1003, ¶59; EX1005, 1:18-28; EX1012, 464; EX1014, 38.

It was well-known for dual-combustion-mode engine controllers to control torque output by: (1) adjusting the amount and timing of injected fuel in a stratified mode; and (2) adjusting the spark timing in a homogenous mode. EX1003, ¶60; EX1005, 3:10-22; EX1010, 6:5-9, 7:8-13, 8:34-37. Spark angle modifications have little influence on a DISI engine's torque output in the stratified mode, so torque output is typically adjusted by modifying the injected fuel quantity. EX1003, 60; EX1005, 3:10-22; EX1014, 37-38. Conversely, in the homogeneous mode, torque output is typically modified by adjusting the spark ignition timing. EX1003, ¶60; EX1005, 3:10-22.

Thus, the '565 patent's claim elements—generating a torque demand, estimating a torque output, comparing the estimated and demand torque outputs to output a difference signal, using a high-pass filter to the remove the low-frequency component of the torque difference signal, and outputting fuel and spark adjustments based on the filtered torque difference signal—were well-known, basic techniques executed by generic electronic controllers for DISI engines before the '565 patent. EX1003, ¶61.

B. Alleged Problem in the Prior Art

The ’565 patent is directed to compensating for differences between torque estimated by the torque producer and torque demanded by the demand controller. EX1001, 1:57-59, 3:23-29. But as explained above, compensating for differences between estimated torque and demand torque, and solutions for this problem, were well-known before the ’565 patent. EX1003, ¶62. The ’565 patent adds nothing to the realm of previously known solutions.

C. Alleged Invention of the ’565 Patent

The ’565 patent admits that a DISI engine controller’s torque producer that modified torque output in terms of fuel adjustment in stratified mode and spark timing in homogeneous mode were known. EX1001, 1:36-45; EX1003, ¶63. According to the ’565 patent, these known DISI engine controllers allegedly could not provide fuel and spark adjustment signals that accounted for differences between estimated output torque and demand torque. EX1001, 1:34-36.

To allegedly solve this known problem, the ’565 patent provides “a torque controller and a method of controlling torque for an engine in which torque is controlled in dependence upon a filtered difference signal where the filtered difference signal is the difference between a desired torque signal and a signal representing an estimate of the current torque.” *Id.*, Abstract. The ’565 patent’s control system included (1) a current torque estimate 22 for estimating a current

torque signal; (2) a comparator 18 for comparing the estimated current torque signal with a desired torque signal; (3) a high-pass filter 20 for filtering out the low-frequency component of the torque desired torque signal; and (4) a transient torque controller 21 for adjusting spark timing and the amount of injected fuel. EX1001, 3:29-50, FIG. 3; EX1003, ¶64.

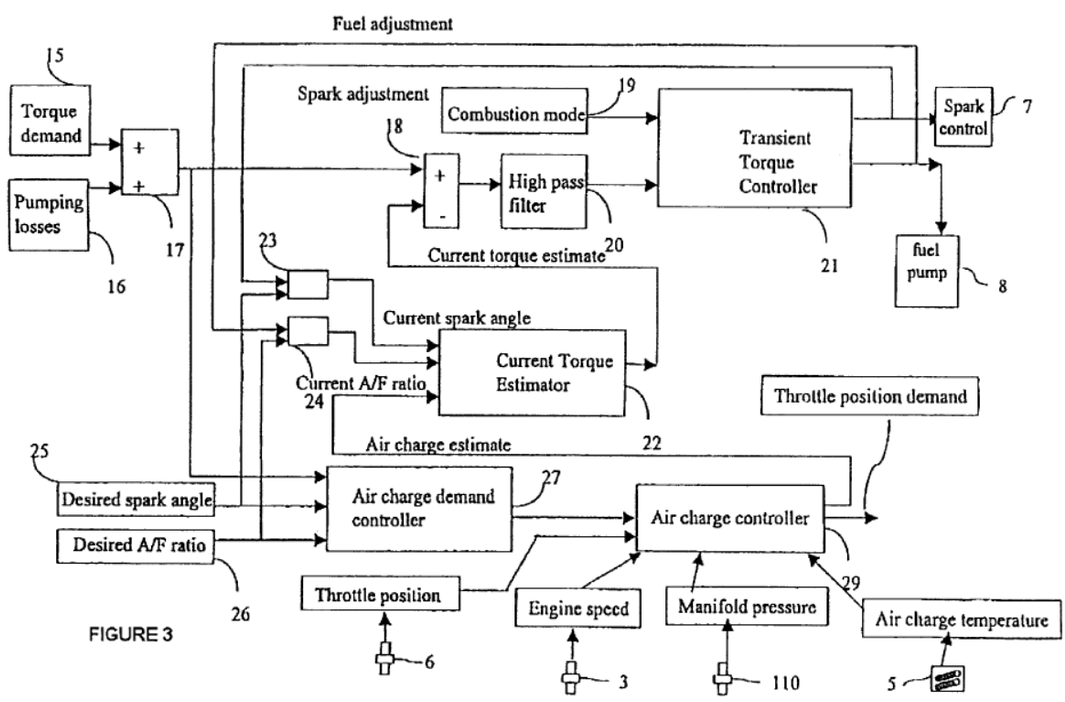

FIGURE 3

EX1001, FIG. 3.

Well before the ’565 patent’s earliest possible priority date, this problem (compensating for differences between estimated torque and demand torque) had been solved in the same way. EX1003, ¶65. For example, Robichaux estimates the current torque, compares the estimated torque to a desired torque signal, and

adjusts spark timing and the injected fuel amount. *Id.*, ¶65. Robichaux also uses the current spark angle, current air/fuel ratio, and estimated air charge to estimate the actual torque output. *Id.*, ¶65. And Scherer's transient torque control system has a high-pass filter to filter low-frequency components of the demanded torque signal, allowing for quicker response time during transient operating conditions. *Id.*, ¶65; EX1007, 4:20-52.

Thus, the claim elements for the '565 patent's alleged inventive concept merely recite what was already in the prior art and well-known to a POSA. EX1003, ¶66.

D. Prosecution History Summary

The application that issued as the '565 patent underwent limited prosecution. The Examiner issued a Notice of Allowance without a single Office Action and did not provide any reasons for allowing the claims. *See generally* EX1002 *and id.,* 0045-52.

Robichaux, Suzuki, and Takahashi were not before the Examiner during prosecution. *See generally id*. And Scherer was never expressly considered or applied.

E. Level of Ordinary Skill in the Art

A POSA at the time of the alleged invention would have had a B.S. degree in Electrical Engineering or Mechanical Engineering (or equivalent), as well as at

least 2-4 years of academic or industry experience in the relevant field of engine control systems. EX1003, ¶¶40-41.

F. Claim Construction

In an *inter partes* review, claims are "construed using the same claim construction standard that would be used to construe the claim in a civil action under 35 U.S.C. 282(b)." 37 C.F.R. § 42.100(b). If the trial is instituted, all claim terms must be given their ordinary and customary meaning as understood by one of ordinary skill in the art at the time of the invention, in light of the specification and the prosecution history of the patent. *Id.*; *Phillips v. AWH Corp.*, 415 F.3d 1303, 1312-1313 (Fed. Cir. 2015) (en banc); *see also* 83 Fed. Reg. 51,340 (Oct. 11, 2018).

None of the claim terms require specific construction and should receive their plain and ordinary meaning, in the context of the '565 patent specification, under the *Phillips* standard. EX1003, ¶70.

VI. Overview of the Applied References

Each applied reference discloses an engine control system and, thus, is from the same field of endeavor as the '565 patent. EX1003, ¶70.

A. Robichaux

Robichaux, like the ’565 patent, is directed to an engine controller for controlling torque output by adjusting control parameters (e.g., air flow, spark timing, and fuel delivery). EX1020, ¶0025; EX1003, ¶¶71-74.

Robichaux’s system 10 “includes a vehicular powertrain 12 having an internal combustion engine 14” and “a controller 18 in communication with engine 14…for providing various information and control functions.” EX1020, ¶0012, FIG. 1.

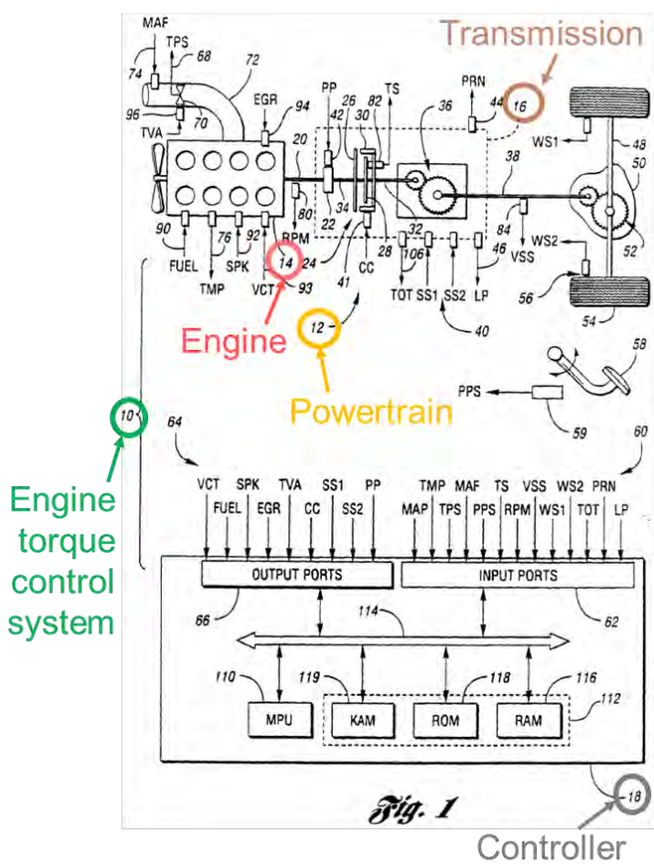

EX1020, FIG. 1 (annotated).

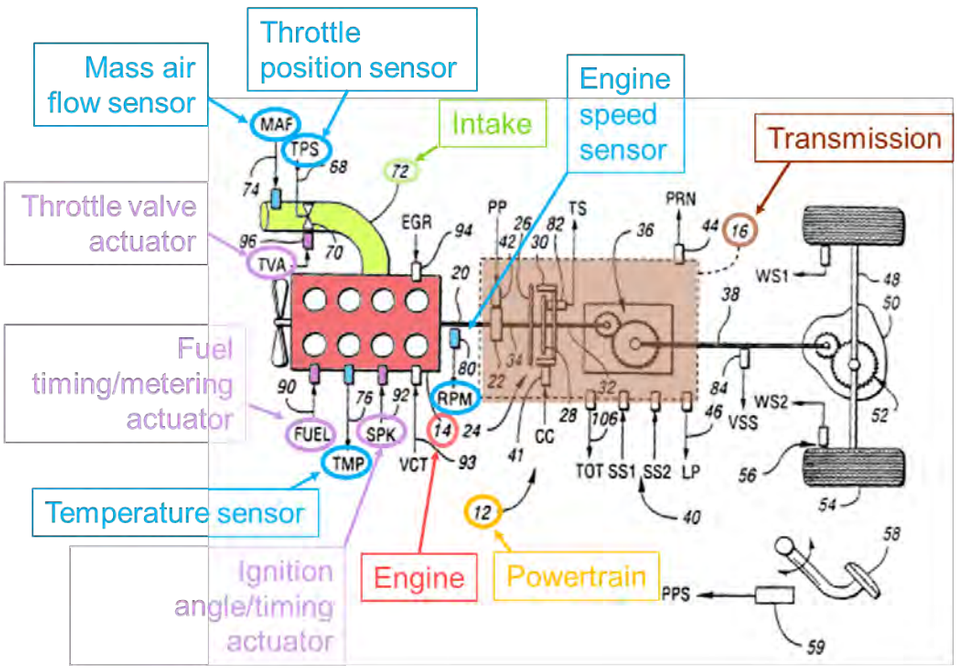

EX1020, FIG. 1 Excerpt (annotated).

Robichaux's system 10 includes sensors 60 connected to controller 18, including a throttle-valve position sensor (68/TPS), a mass airflow sensor (74/MAF), an engine temperature sensor (76/TMP), and an engine speed sensor (80/RPM). EX1020, ¶¶0016- 0017. Actuators 64 effect movement of the powertrain devices, including actuators for adjusting fuel supply (90/FUEL), ignition timing (92/SPK), and air supply (96/TVA). *Id.*, ¶0020.

Communicating with sensors 62 and actuators 64, Robichaux's controller 18 provides integrated control of engine 14, including torque output. *Id.*, ¶0021. Controller 18 includes a microprocessor 110 that executes an engine torque

control method stored as instructions in the controller's computer readable media 112. *Id.*

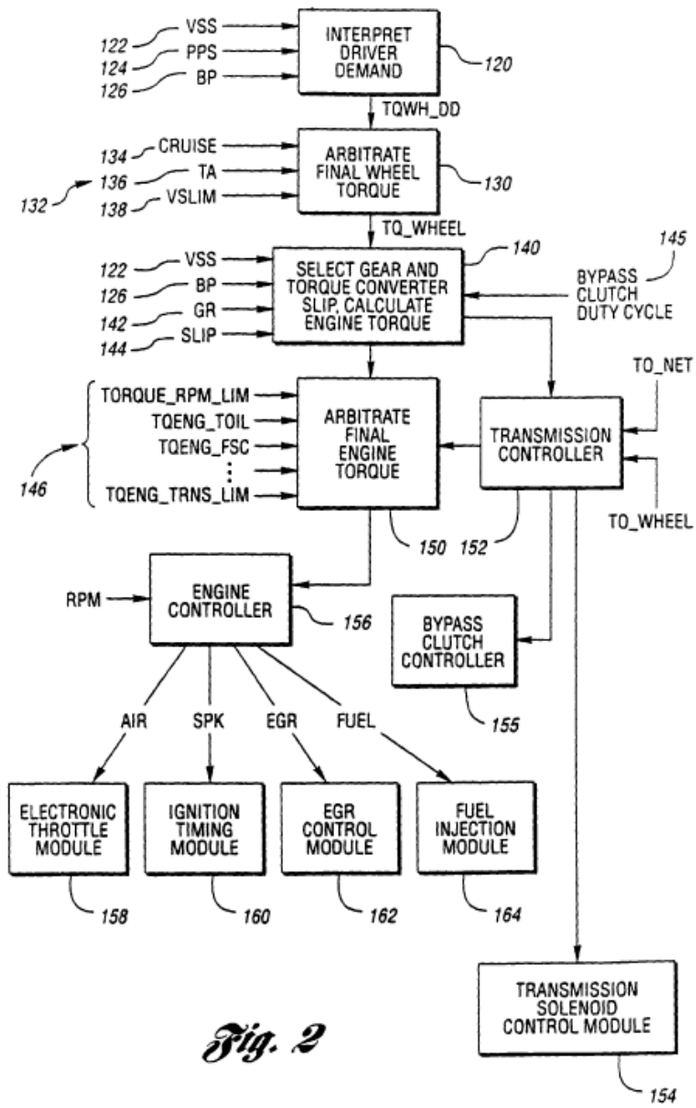

EX1020, FIG. 2.

B. Scherer

Like Robichaux and the '565 patent, Scherer is directed to an engine controller. EX1007, 1:7-11; EX1003, ¶75. Scherer's controller adjusts torque

output through airflow, spark timing, and fuel delivery adjustments. *Id*., 2:47-3:5. The controller includes a transient torque signal-processing branch that includes a high-pass filter 4 that receives a desired engine torque signal and outputs a dynamic torque component to a torque controller that adjusts torque output by correcting spark timing for homogeneous fuel-charged configurations or fuel delivery for heterogeneous fuel-charged configurations. *Id*., 2:51-59, 4:20-45, 5:35-55, 8:26, FIGS. 1, 2. The transient torque signal-processing branch, including the high-pass filter, allows the engine controller to more quickly correct transient torque demand. *Id*., 2:38-42, 5:10-15.

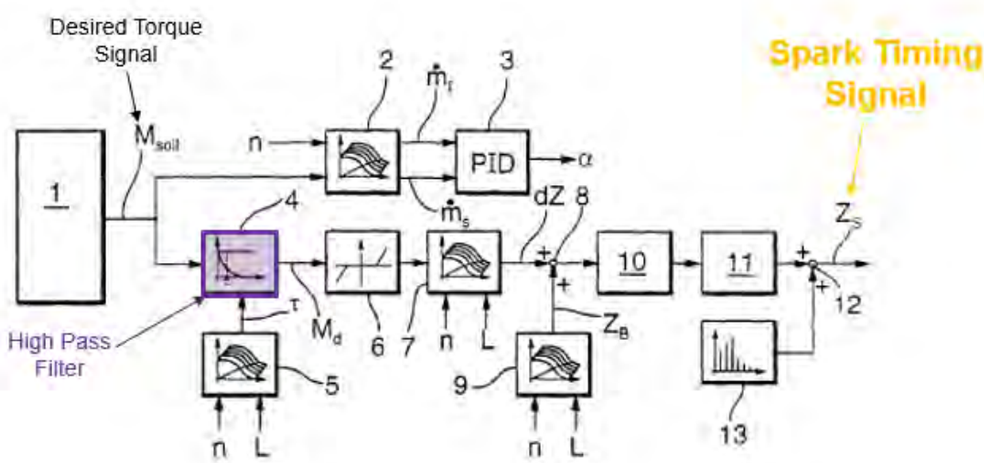

EX1007, FIG. 1 (annotated).

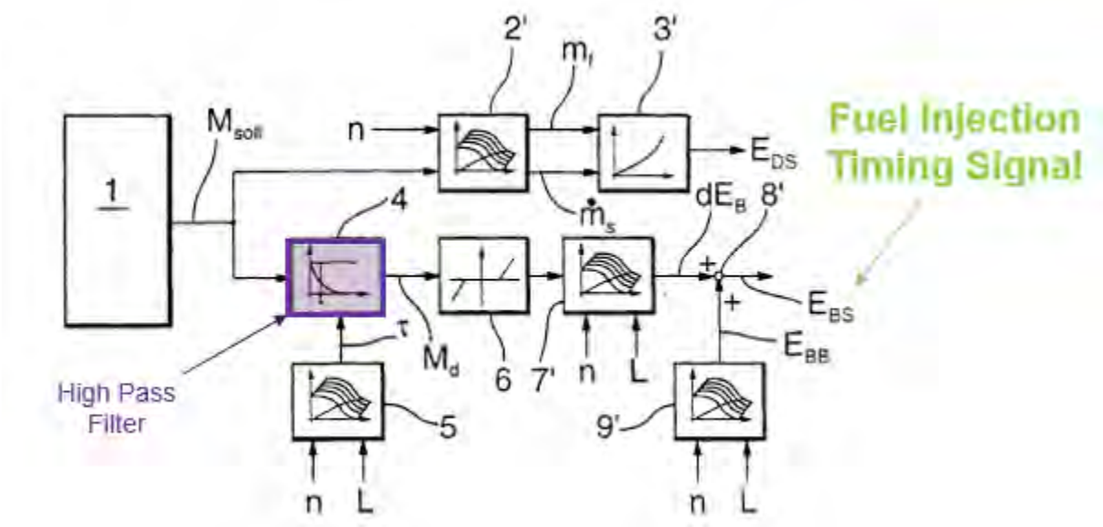

EX1007, FIG. 2 (annotated).

C. Takahashi

Takahashi, like Robichaux, Scherer, and the ’565 patent, is directed to an engine controller. EX1003, ¶¶76-77. Takahashi’s controller controls torque output by fuel and throttle adjustments. EX1008, 1:5-9, 3:4-16. Takahashi’s control unit includes a target air mass flow rate module 11, a status estimating module 142, a fuel injection controller 13, and a throttle controller 144. *Id.*, 3:17-24, 10:32-50; FIG. 14. The throttle controller 144 calculates the desired throttle position to set the airflow into the engine cylinder at the desired air charge value and achieve a target torque value. *Id.*, 3:20-27, 6:10-16, 7:50-58.

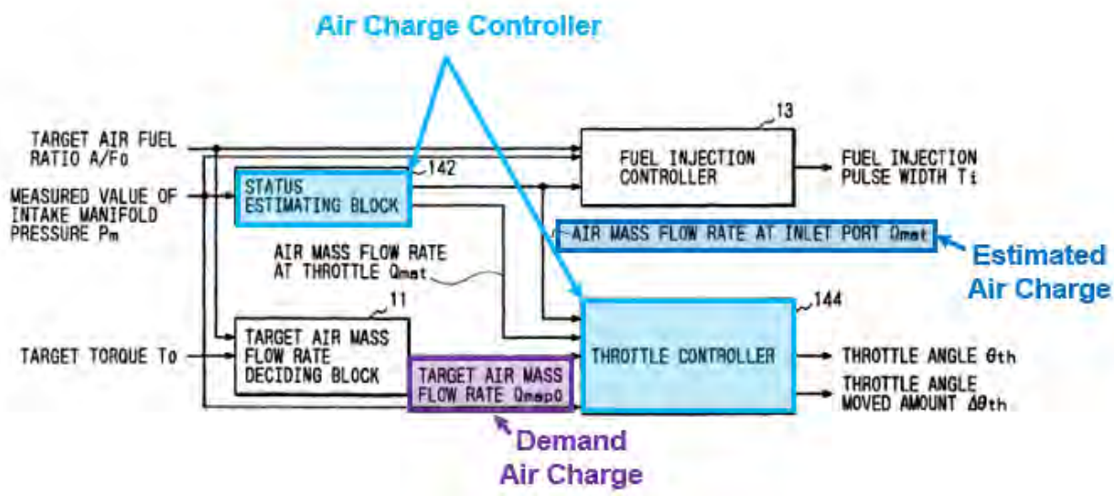

EX1008, FIG. 14.

The throttle controller 144 determines the desired throttle position based on a target air mass flow rate (i.e., demand air charge) and an estimated air mass flow rate (i.e., estimated air charge) at the inlet port. *Id.*, 10:42-47, FIG. 14. The throttle controller 144 receives the target air mass flow rate from a target air-mass-flow-rate deciding block 11 and estimates the current air mass flow rate using a status estimating block 142. *Id.*, 10:44-60, FIG. 14. The status estimating block 142 estimates the current air mass flow rate based on throttle position, engine speed, intake manifold pressure, and intake air temperature. EX1008, 10:42-66, FIG. 15. The target air mass flow rate module 11 receives a target air/fuel ratio signal, a target torque signal, an engine speed signal, and a spark advance signal, and outputs a target air mass flow rate signal. *Id.*, 3:20-41.

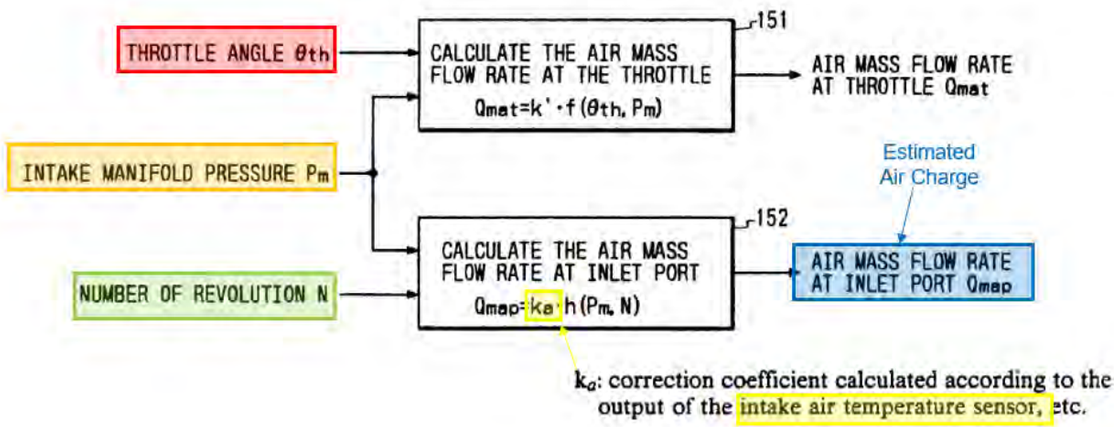

EX1008, FIG. 15 (annotated).

D. Suzuki

Suzuki, like Robichaux, Scherer, Takahashi, and the ’565 patent, is directed to an engine controller for adjusting torque output by fuel injection and spark timing adjustments. EX1005, 1:39-43; EX1003, ¶¶78-80.

Suzuki’s controller includes a combustion mode changing section that switches engine operation between a homogenous mode and a stratified mode. *Id*., 2:54-61, FIG. 1B.

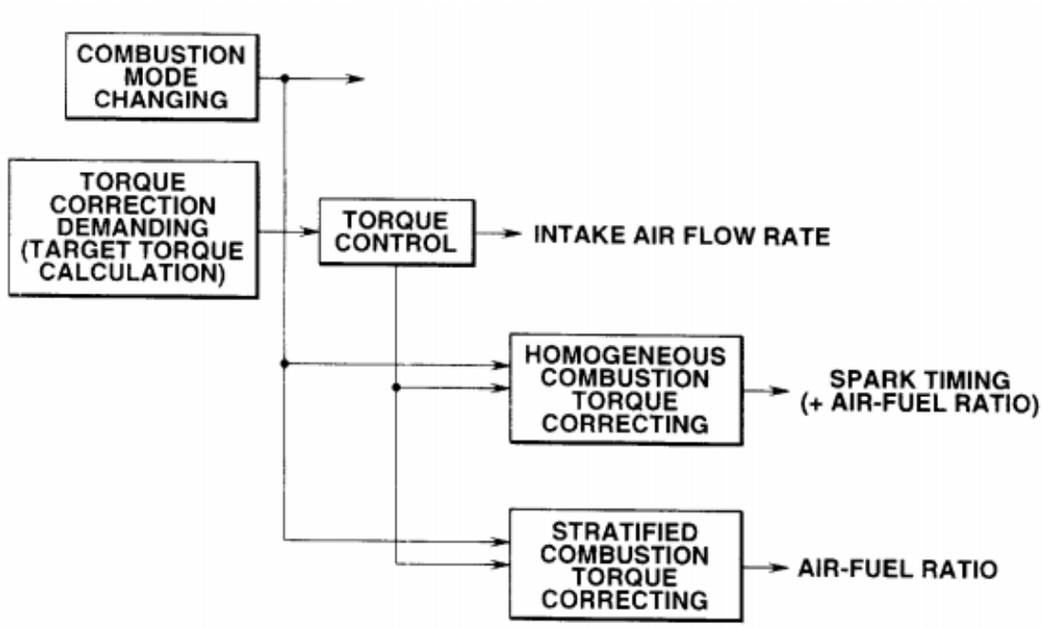

EX1005, FIG. 1B.

The controller also includes a torque correction demanding section that generates a torque correction demand signal based on a change in engine operating conditions. *Id*., 2:61-63. A torque control section controls the amount of air permitted to enter into the engine based on the received torque correction demand signal. *Id*., 3:12-15. The controller includes a homogenous combustion torque correcting section and a stratified combustion torque correcting section that modifies the torque output based on the received torque correction demand signal. *Id*., 2:64-3:22, 15:53-16:6.

In a homogenous combustion mode, the torque correction section adjusts the spark timing based on the calculated torque shortage (S38 and S39). *Id.*, 5:59-6:6,

7:51-54, 8:1-2, 15:56-58. In the stratified combustion mode, the torque correction section adjusts the fuel delivery based on the calculated torque shortage (S40 and S22-25 in Figure 5). *Id*., 6:20-57, 7:60-64, 8:3-4, 16:1-2. To adjust fuel delivery, the torque correction section transmits an injection pulse signal to the fuel injector, thereby modifying the air/fuel ratio. *Id.*, 6:35-67.

VII. Ground 1: The combination of Robichaux and Scherer renders obvious claims 1 and 7.

A. The Board should not deny the institution under Section 325(d) because the Office did not consider the straightforward combination of references applied here.

The Board has the discretion to deny institution when "the same or substantially the same prior art or arguments previously were presented to the Office." 35 U.S.C. § 325(d). In the *Becton* decision's precedential portion, the Board articulated six non-exclusive factors for considering whether to exercise its discretion to deny the institution under § 325(d). *Becton, Dickinson & Co. v. B. Braun Melsungen AG,* IPR2017-01586, Paper 8 at 17-18 (P.T.A.B. Dec. 15, 2017) (informative; precedential as to § III.C.5, first para.). Here, even though Scherer was cited on the '565 patent's face, the *Becton* factors establish that the Board *should not* exercise its discretion to deny institution. This Petition does not recycle prior art and arguments. Instead, it relies on a reference (namely, Scherer) that was cited in an Informational Disclosure Statement ("IDS"), accompanying the filed application. Scherer was never the basis for any prior-art rejection. Moreover, the

Petition applies Scherer to modify, according to straightforward techniques, previously unconsidered prior art references for reasons discussed in the prior art and known to a POSA.

Regarding *Becton* factors (a)-(b)—the similarities, material differences, and cumulative nature of the asserted prior art—although Scherer was cited in an IDS, the asserted prior art *combination* here is materially different because it is applied in a combination that was not considered by the Office. Particularly, the primary reference Robichaux was not cited in the '565 patent, and thus, Scherer was never applied in combination with Robichaux. Moreover, Robichaux combined with Scherer is not cumulative of other prior art evaluated during the examination, but rather disclose the precise claimed elements.

Regarding *Becton* factor (c), Scherer did *not* serve as the basis for rejection. *See Intel Corp. v. Qualcomm Inc.*, IPR2019-00128, Paper 9 at 16 (P.T.A.B. May 29, 2019) ("The fact that [a reference] was not the basis of rejection weighs strongly against exercising our discretion to deny institution under 35 U.S.C. § 325(d).") In fact, no reference served as the basis of a rejection during prosecution. The claims were allowed without any substantive rejection. Thus, the applicant did not "overcome" Scherer, or any other reference (including Robichaux) for that matter, as prior art. This directly relates to *Becton* factor (d)—the applicant made no arguments whatsoever during examination against the prior art applied here, or

any other prior art. Thus, there is no overlap between arguments made during examination and the manner in which this Petition uses Scherer. Accordingly, regarding *Becton* factor (e), the Examiner erred in evaluating the cited prior art through his broad, unsupported statement in the reasons for allowance, which failed to identify any feature that would have allegedly patentably distinguished the alleged invention over the prior art. EX1002, 0045-53.

Furthermore, under *Becton* factor (f), additional facts and evidence here—including Dr. MacCarley's declaration—warrant institution and ultimately a finding of unpatentability based on the combination of Robichaux and Scherer.

The Board has instituted review in myriad cases with facts similar to this one. *See e.g.*, *Pure Storage, Inc. v. Realtime Data LLC*, IPR2018-00549, Paper 7 at 11 (P.T.A.B. July 23, 2018) ("there is no evidence of record that [the prior art references] were substantively considered by the Examiner."); *see also Synaptic Medical Inc. v. Karl Storz-Endoscopy-America, Inc.*, Case No. IPR2018-00462, Paper 6 at 10 (P.T.A.B. July 16, 2018) ("the references here were not applied to reject the claims of the '360 Patent, and there is no evidence that the Examiner considered the particular disclosures cited in the Petition or addressed arguments similar to those Petitioner now presents."); *Unified Patents Inc. v. John L. Berman*, IPR2016-01571, Paper 10 at 12-13 (P.T.A.B. Dec. 14, 2016) (declining to deny institution under § 325(d) where previously applied reference was combined with

reference not previously considered). Indeed, the facts here demonstrate that the *Becton* factors weigh heavily in favor of the Board granting institution to consider this Petition's merits.

Thus, the Board should not deny institution merely because Scherer was cited in an applicant-filed IDS. Here, Scherer is presented *in combination* with Robichaux, which was *not* considered by the Office. As the Petition demonstrates, Robichaux's system generates a demand torque, estimates an engine torque output, compares the demand torque to the estimated torque to determine the difference, and controls torque output through fuel quantity and spark timing adjustments based on the calculated difference. *See infra* Sections VII.C.1-7. Robichaux also estimates the torque output based on a current spark angle, a current air/fuel ratio, and an estimated air charge. *See infra* Section VII.C.4. Scherer's transient torque control system uses a high-pass filter for its typical purpose, here, removing the low-frequency component of a torque signal and output the filtered signal to a torque controller. *See infra* Section VII.C.6. And a POSA would have been motivated to combine Scherer's teachings with Robichaux's torque controller, providing the predictable result of precisely controlling engine torque output. *See infra* Section VII.B. Accordingly, combining Robichaux and Scherer does not present the same or substantially similar prior art or arguments before the Office, so the Board should not deny institution under § 325(d).

B. Rationale for Combining Robichaux with Scherer

Robichaux and Scherer are from the same field of endeavor—engine control systems and are directed to engine controllers that determine an input target torque value for adjusting engine operational parameters (e.g., fuel quantity, spark timing, or air intake). *Id.*, ¶82. Robichaux's "invention is directed to a system and method for controlling engine torque using feedback and feed forward control." EX1020, ¶0001. Scherer's "invention relates to a process and apparatus for adjusting the torque of an internal-combustion engine by regulating the ignition point and the air flow rate in an Otto engine." EX1007, 1:7-11. A POSA would have been motivated to combine Robichaux and Scherer for at least the reasons below and would have had a reasonable expectation of success in doing so. EX1003, ¶¶81-82.

Robichaux's controller 18 includes blocks 120, 130, 140, 150 (collectively, "a torque demand controller") that generate a desired engine brake torque signal ("a demand torque signal") and an engine controller ("torque producer") that receives the demand torque signal. EX1003, ¶83; EX1020, ¶0023.

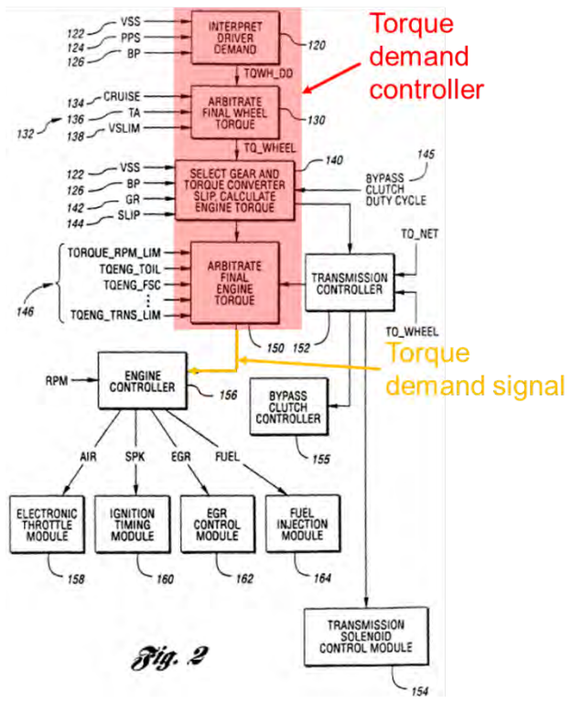

EX1020, FIG. 2 (annotated).

As shown in Figure 3, block 216 ("estimator") (1) receives an ignition angle signal SPARK ("current spark angle signal"), an air/fuel ratio signal LAMBSE ("current air/fuel ratio signal"), and an air flow signal AIRFLOW ("estimated air charge") and (2) outputs an estimated actual engine brake torque TQ_NET. EX1003, ¶84; EX1020, ¶0033. Robichaux's controller includes a block 218 ("comparator") that compares the estimated actual engine brake torque with a first intermediate torque to generate a torque error signal TQ_ERROR ("a difference signal"). Ultimately, section 202 of engine controller 156 converts the torque error

signal to an appropriate control parameter (e.g., an airflow, fuel, and spark angle). *Id*., ¶¶0027, 0048.

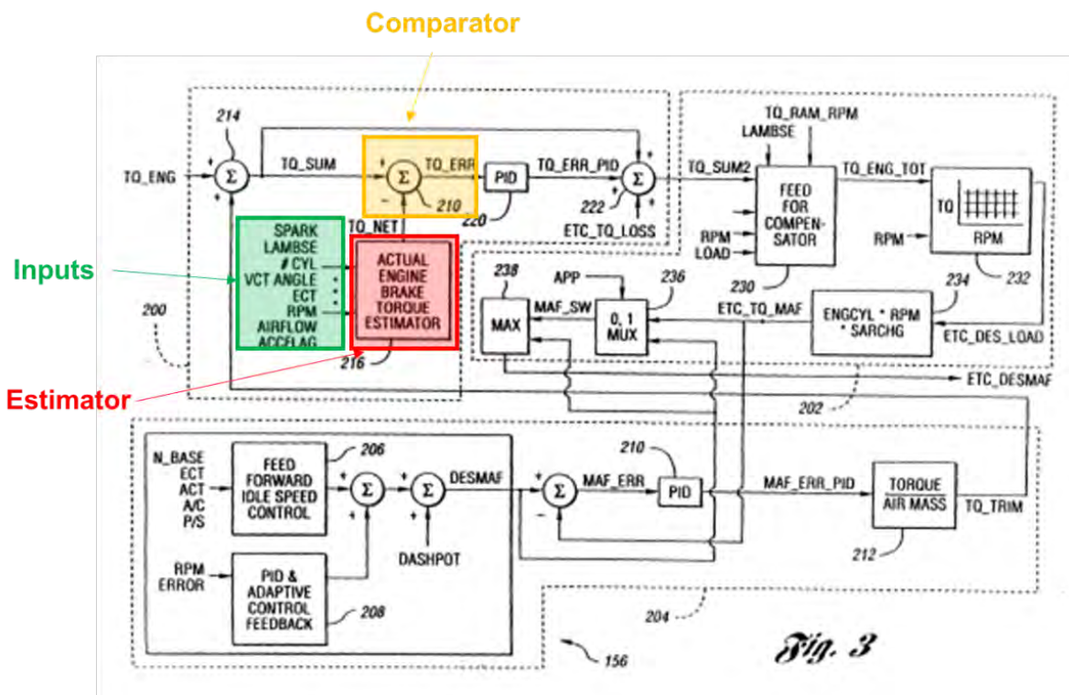

EX1020, FIG. 3 (annotated).

Robichaux's proportional-integral-derivative (PID) controller 220 processes the torque error signal during steady-state conditions. EX1003, ¶85; EX1020, ¶0032. Robichaux's PID controller "is not active during certain transient torque limiting control modes." EX1020, ¶0032; EX1003, ¶¶86-87. Accordingly, Robichaux invited combinations with references disclosing transient control functionality to process the torque demand signal during transient conditions. EX1003, ¶87.

Scherer's system controls torque during transient conditions. *Id.*, ¶88. Scherer's controller includes a transient control branch having a high-pass filter 4 that determines a dynamic desired torque component (M_d) by isolating the high-frequency (dynamic) component of the desired torque signal M_{des}. EX1007, 4:31-40, 5:35-40. Removing the desired torque signal's low-frequency component allows Scherer's controller to "react very rapidly to sudden changes of the engine torque," arising during transient engine operations. EX1003, ¶88; EX1007, 4:20-25, 4:40-45, 5:10-15.

The desired torque signal's filtered dynamic component is used for both spark-ignition-timing adjustments (Figure 1) and for fuel-injection adjustments (Figure 2). *Id.*, 2:51-54; 4:20-52, 5:16-55, FIGS. 1, 2; EX1003, ¶89.

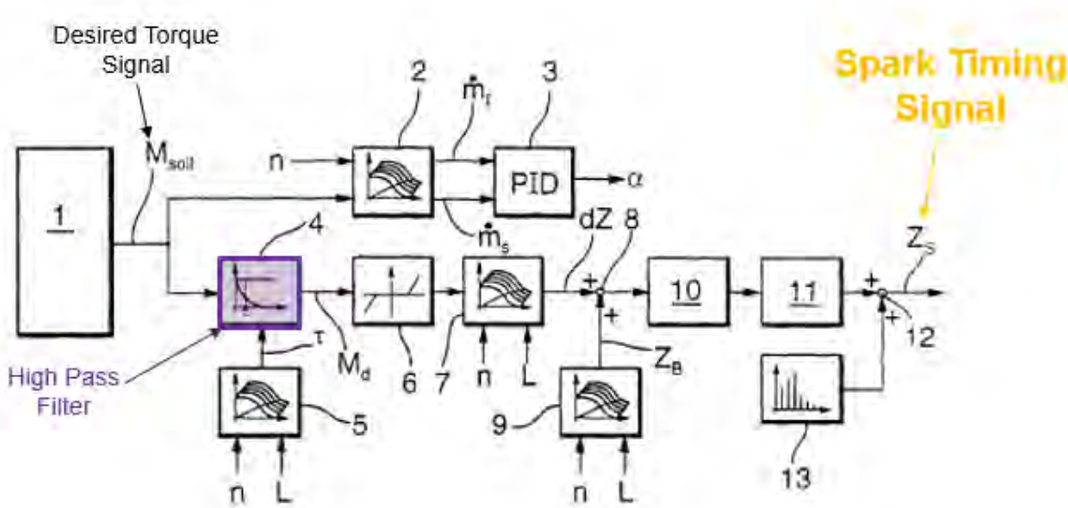

EX1007, FIG. 1 (annotated).

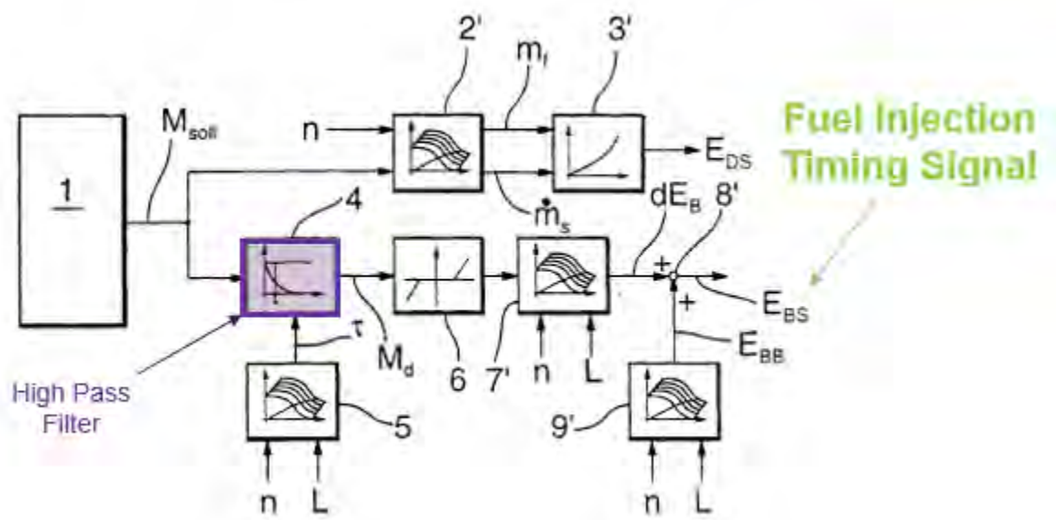

EX1007, FIG. 2 (annotated).

To address dynamic demand torque changes in Robichaux's system, a POSA would have been motivated to use Scherer's transient control branch. EX1003, ¶90. Scherer's transient control branch, including high-pass filter 4, would have been easily implemented with Robichaux's controller to provide both steady-state and transient torque corrections. *Id.*, ¶90. Combining Scherer's transient control branch with Robichaux's controller would have merely been applying a known technique (Scherer's transient control) in a similar, known device (Robichaux's controller) in the same way. *KSR Int'l Co. v. Teleflex Inc.*, 550 U.S. 398, 416 ("[I]f a technique has been used to improve one device, and a person of ordinary skill in the art would recognize that it would improve similar devices in the same way, using the technique is obvious."); EX1003, ¶90.

Furthermore, a POSA would have had a reasonable expectation of success. EX1003, ¶91. Robichaux's and Scherer's controllers receive similar measured engine parameters (e.g., engine speed, airflow rate, and air/fuel ratio) and determine a target torque value based on these parameters. *Id.*, ¶91; EX1020, ¶¶0016- 0018, 0025; EX1007, 4:60-67. Combining teachings would have simply involved modifying an engine controller's software to perform the steps taught in the references—a basic task for a POSA. EX1003, ¶91; EX1019, 102, 223. Specifically, a POSA would have recognized that Scherer's transient control branch, including high-pass filter 4, would have been easily implemented in Robichaux's controller 18 by modifying the software instructions stored in the computer readable media 112 of Robichaux's controller 18 so that the torque error signal transmitted to a transient control branch. EX1003, ¶91; EX1019, 138.

Scherer's transient control branch also includes modules, for example, units 6, 7, 9, 10, 11 and 13 (Figure 1) and units 6, 7, and 9 (Figure 2), that produce a spark-timing signal Z_s for adjusting torque output in homogeneous fuel-charged configurations or a fuel-injection-timing signal for adjusting torque output in heterogeneous fuel-charged configurations. EX1007, 2:51-59, 4:20-45, 5:35-55. A POSA would have been motivated to incorporate Scherer's transient-torque control (including the ignition-point-adjustment branch [Figure 1] or injection-start-adjustment branch [Figure 2]) into Robichaux's controller to enable torque control

during transient conditions. EX1003, ¶92. A POSA would have easily implemented Scherer's control modules 6, 7, 9, 10, 11 and 13 by modifying the software instructions stored in Robichaux's engine controller to perform the same function disclosed in Scherer, generating a spark-ignition-timing signal and fuel-delivery-timing signal to control torque. *Id.*, ¶92.

C. Robichaux and Scherer render obvious claim 1.

1. [1.P] "A device for controlling a torque output of an engine, the device comprising:"

Robichaux discloses a device for controlling an engine's torque output. EX1003, ¶93. Particularly, Robichaux discloses "a system and method for controlling engine torque using feedback and feed forward control." EX1020, ¶0001. Robichaux's engine torque control system 10 has a powertrain 12 including an engine 14. *Id.*, ¶0012, FIG. 1. Control system 10 also includes "a controller 18 in communication with engine 14…for providing various information and control functions." *Id.*, ¶0021. Controller 18 "provides integrated control of engine 14." *Id.* Controller 18's microprocessor "implement[s] the method for controlling engine torque." *Id.* Accordingly, control system 10 controls the engine's torque output. EX1003, ¶93.

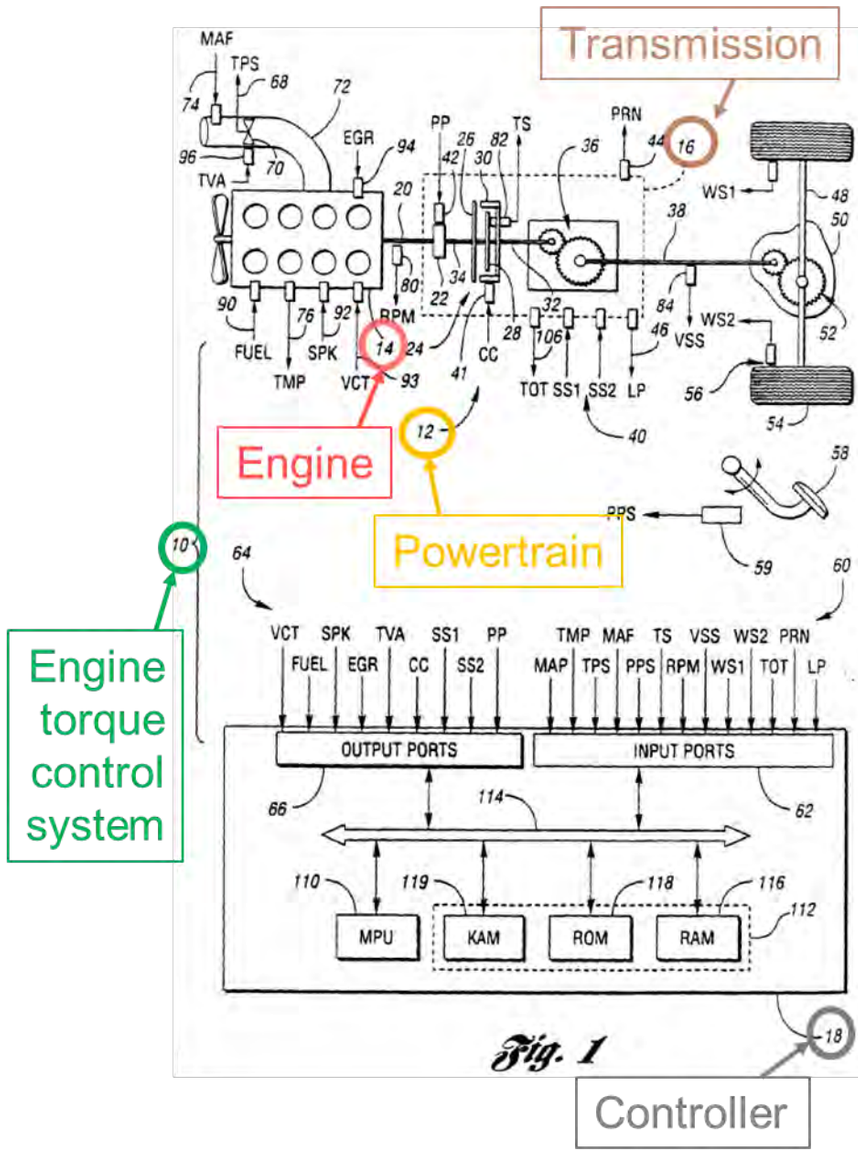

EX1020, FIG. 1 (annotated).

Thus, Robichaux discloses [1.P]. EX1003, ¶94.

2. [1.A] "a torque demand controller for generating a torque demand signal"

Robichaux discloses the recited torque demand controller. EX1003, ¶95. Robichaux's controller architecture determines the desired engine torque. EX1020, ¶0010 ("an output torque based powertrain control strategy including **determination of a desired engine torque** according to the present invention"), ¶¶0023-0025; FIG. 2. This architecture includes an "interpret driver demand block 120," an "arbitrate final wheel torque" block 130, a "select gear and torque converter slip, calculate engine torque" block 140, and an "arbitrate final engine torque" block 150 that collectively produce "a desired engine brake torque" signal communicated to the engine controller. EX1020, ¶¶0023-0025 ("final engine torque determined by block 150 is communicated as **a desired engine brake torque** to engine controller 156"), FIG. 2; EX1003, ¶95. Based on the vehicle speed 122 (VSS), accelerator pedal position 124 (PPS), and barometric pressure 126 (BP), block 120 determines a driver's demand TQWH_DD. EX1020, ¶0023, FIG. 2; EX1003, ¶95. Block 130 arbitrates the driver's demand TQWH_DD with other torque demands 132 to provide a final wheel torque TQ_WHEEL. EX1020, ¶0023, FIG. 2; EX1003, ¶95. Based on operating conditions (e.g., vehicle speed 122 (VSS), barometric pressure 126 (BP), and current gear ratio 142 (GR)), block 140 calculates a requested engine torque, which is transmitted to block 150.

EX1020, ¶¶0023-0024, FIG. 2; EX1003, ¶95. Block 150 arbitrates the received engine torque signal with other engine torque limiting functions 146 to determine the final "desired engine brake torque" transmitted to engine controller 156. EX1020, ¶¶0024-0025, FIG. 2; EX1003, ¶95.

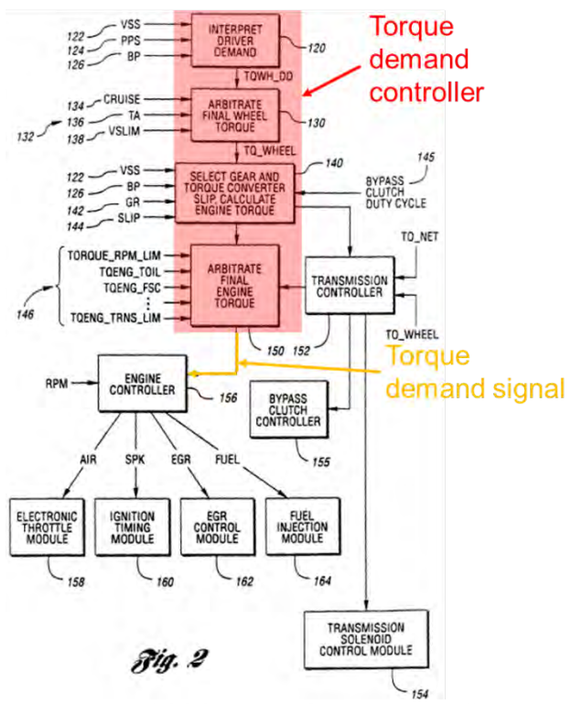

EX1020, FIG. 2 (annotated).

Robichaux's blocks 120, 130, 140, and 150, either individually or in combination, constitute a "torque demand controller," as recited in claim 1. EX1003, ¶96. Each block generates a signal corresponding to the desired torque, including the torque demand signal transmitted from block 150 to the engine controller. *Id.*, ¶96. And Robichaux's blocks 120, 130, 140, and 150 operate in the same manner as the '565 patent's torque demand controller 11, which calculates a

required output torque signal based on operating parameters. EX1001, 2:57-67; EX1003, ¶96.

Thus, Robichaux discloses [1.A]. EX1003, ¶97.

3. [1.B] "a torque producer which receives the torque demand signal"

Robichaux discloses the claimed torque producer. EX1003, ¶98. In Robichaux, "[t]he final engine torque determined by block 150 is communicated as a desired engine brake torque to engine controller 156." EX1020, ¶0025; EX1003, 98. The engine controller executes instructions to control the engine torque. EX1020, ¶0021 ("Computer readable media 112 include stored data representing **instructions executable by microprocessor 110 to implement the method for controlling engine torque** according to the present invention.")[1]; EX1003, ¶98.

[1] Emphasis added throughout unless indicated.

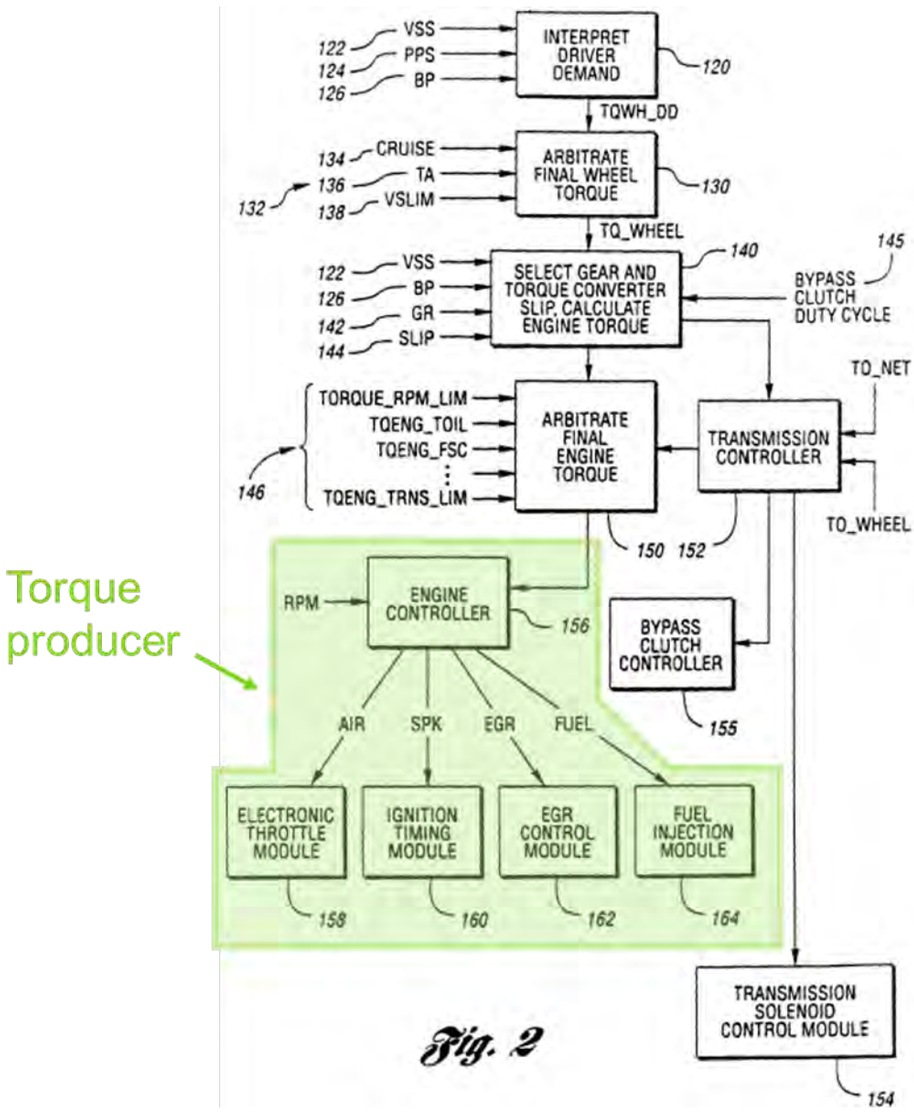

EX1020, FIG. 2 (annotated).

Robichaux's engine controller modifies the produced torque by adjusting "control parameters such as air flow [(158)], spark [(160)], EGR [(162)], and fuel [(164)]." EX1020, ¶0025, FIG. 2; EX1003, ¶99. Based on these parameters, actuators adjust the produced engine torque. EX1020, ¶0020, 0025, FIGS. 1-2;

EX1003, ¶99. These actuators include "actuators for timing and metering fuel (FUEL) 90, controlling ignition angle or timing (SPK) 92…and adjusting the intake air using throttle valve 70 with an appropriate servomotor or actuator (TVA) 96." EX1020, ¶0020.

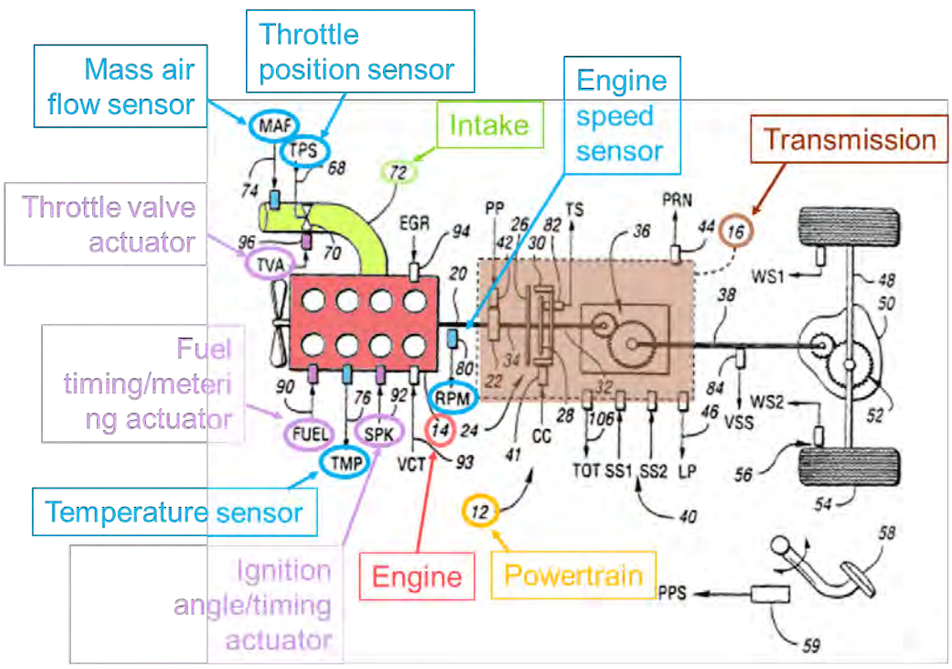

EX1020, FIG. 2 (annotated excerpt).

A POSA would have understood that Robichaux's engine controller and actuators constitute a "torque producer," as recited in claim 1. EX1003, ¶100. The engine controller and actuators adjust control parameters (e.g., airflow, spark-ignition angle or timing, and air/fuel ratio) to produce torque. *Id.*, ¶100. Accordingly, Robichaux discloses a torque producer. *Id.*, ¶100.

Thus, Robichaux discloses [1.B]. *Id.*, ¶101.

4. [1.C] "the torque producer includes: an estimator which receives as inputs a current spark angle signal, a current air/fuel ratio signal and an estimated air charge signal and outputs an estimated torque signal"

Robichaux discloses, or at least renders obvious, the recited torque estimator. EX1003, ¶102. Robichaux's engine controller (part of the torque producer) includes an actual-engine-brake-torque estimator block 216 that "provides an **estimate of the actual engine brake torque** based on current engine operating parameters including **ignition angle[("current spark angle signal")]**, **air/fuel ratio [("current air/fuel ratio signal")]**, number of cylinders, variable CAM timing angle, engine coolant temperature, engine speed, **airflow**, and operation state of accessories such as the air conditioning compressor." EX1020, ¶0033, FIG. 3; EX1003, ¶102.

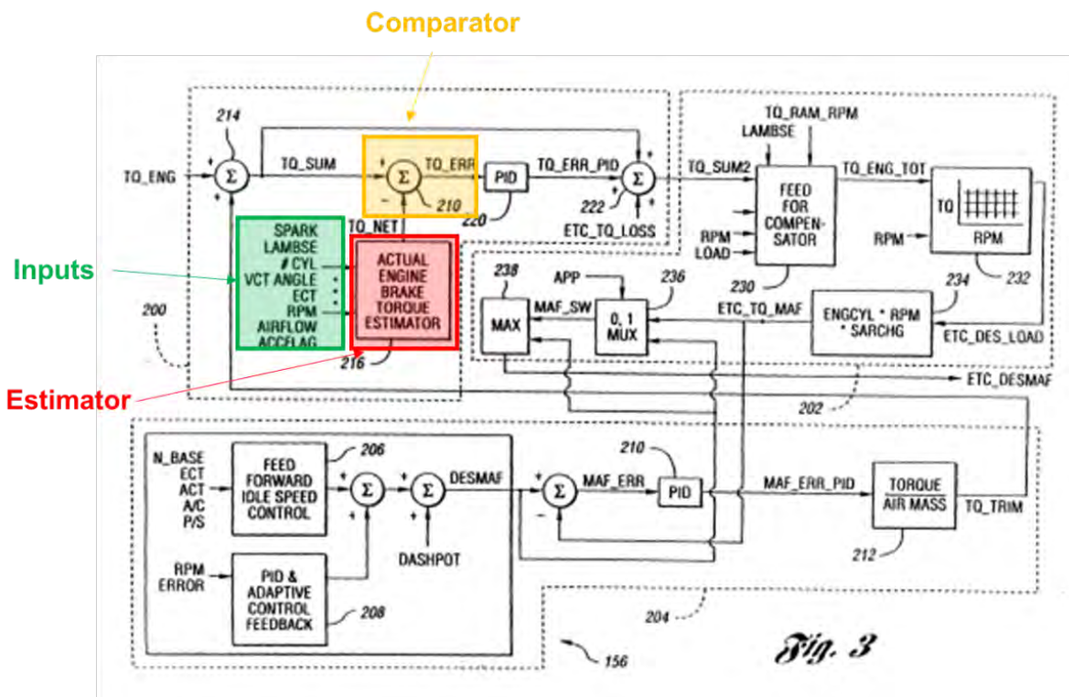

EX1020, FIG. 3 (annotated).

A POSA would have understood that "airflow" in paragraph 0033 and Robichaux's Figure 3 was the recited "air charge." EX1003, ¶103. Air charge was commonly known as "mass flow rate of incoming air." EX1015, 12.6 ("the mass flow rate of incoming air, known as the air charge"); *see also* EX1012, 452 ("air mass (fresh gas charge)"); EX1003, ¶103. Moreover, generating torque as a function of air charge was well-known. EX1012, 452; EX1003, ¶103. Accordingly, Robichaux discloses, or at least renders obvious, an estimator that receives an estimated air charge signal, a current spark angle signal, and a current air/fuel ratio. EX1003, ¶103.

Thus, Robichaux discloses or renders obvious [1.C]. *Id.*, ¶104.

5. [1.D] "a comparator which receives as inputs the estimated torque signal and a desired torque signal and outputs a difference signal"

Robichaux discloses the recited comparator. EX1003, ¶105. Robichaux's summing junction 214 adjusts the desired engine brake torque TQ_ENG from block 150 (Figure 2) by adding an idle speed torque TQ_TRIM to generate a first intermediate torque TQ_SUM. EX1020, ¶0029, FIG. 3; EX1003, ¶105. Block 218 receives the TQ_SUM torque signal, compares this signal to the actual engine brake torque TQ_NET signal ("estimated torque signal") estimated by block 216, and produces a torque error TQ_ERROR. EX1020, ¶0030, FIG. 3; EX1003, ¶105. The generated torque error TQ_ERROR is a "difference signal," representing the difference between the estimated actual engine brake torque TQ_NET and the desired engine brake torque TQ_ENG. EX1003, ¶105.

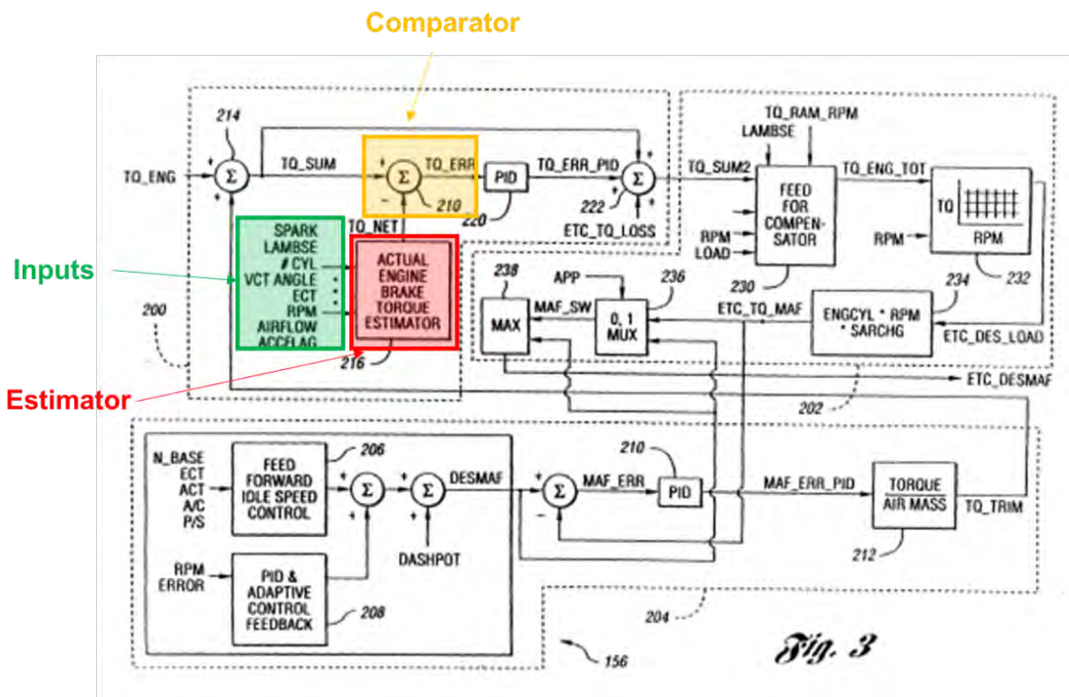

EX1020, FIG. 3 (annotated).

Accordingly, Robichaux's engine controller 156 includes a "comparator" that receives an estimated torque signal and a desired torque signal, and outputs a difference signal. EX1003, ¶106. Furthermore, Robichaux's controller operates in the same manner as the '565 patent's comparator, which generates an error signal representing a shortage between the estimated torque and the desired torque. EX1001, 3:34-39; EX1003, ¶106.

Thus, Robichaux discloses [1.D]. EX1003, ¶107.

6. [1.E] "a high pass filter which receives as an input the difference signal and outputs a filtered difference signal in which low frequency components are absent"

Robichaux and Scherer render obvious the recited high-pass filter. EX1003, ¶108. Robichaux's engine controller 156 includes a PID controller 220 that receives the generated torque error TQ_ERROR ("difference signal") and generates a feedback correction torque TQ_ERR_PID. EX1020, ¶¶0030-0031, 0046, FIG. 3; EX1003, ¶110. The steady-state PID control is suspended during abrupt transients. EX1020, ¶0032; EX1003, ¶¶85-87. Recognizing this requirement to suspend the PID controller 220, Robichaux invited combinations with references disclosing transient torque control to process the torque demand signal during transient conditions. EX1003, ¶¶87, 109.

Scherer's control system controls engine torque output through spark-timing and fuel-delivery adjustments during transient conditions. EX1003, ¶¶88-89, 110; EX1007, 4:20-24, 5:35-55. Scherer's transient control system "react[s] very rapidly to sudden changes of the engine torque." EX1007, 4:23-25. Scherer's control system includes a transient control branch having a high-pass filter 4 that isolates the dynamic desired torque component (M_d) of the desired torque signal M_{des}. EX1007, 4:31-39, 5:35-40; FIGS. 1, 2.

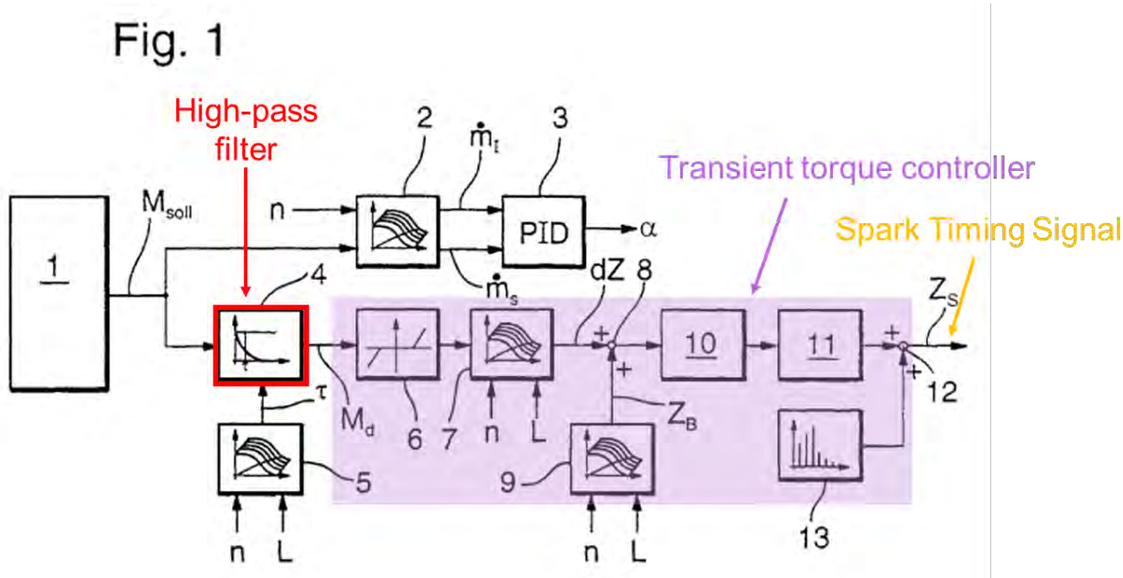

EX1007, FIG. 1 (annotated).

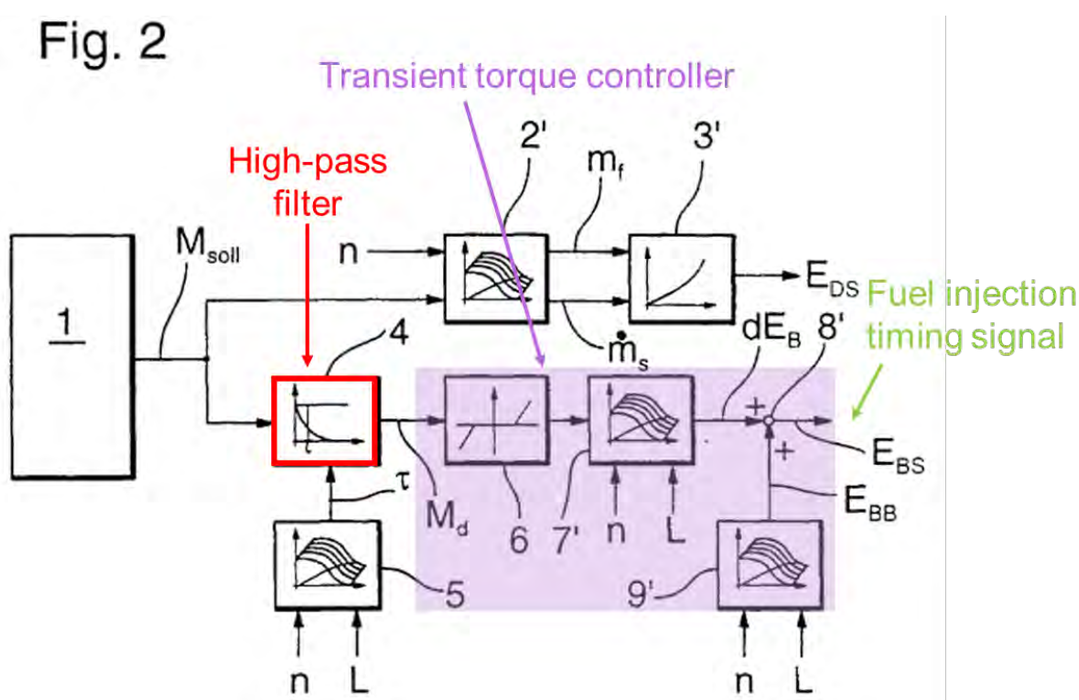

EX1007, FIG. 2 (annotated).

Scherer's transient control branch functions the same as the '565 patent's high-pass filter, removing the torque signal's low-frequency component to isolate and pass the transient component for correcting dynamic torque changes. EX1003, ¶110.

Scherer also discloses adjusting both spark and fuel injection timing based on the isolated dynamic torque component outputted from the high-pass filter 4. EX1007, 2:51-54, 4:20-5:9, 5:16-55, FIGS. 1, 2; EX1003, ¶111. Specifically, Scherer's control system adjusts torque output by adjusting the spark timing for homogeneous fuel-charged configurations (Figure 1) or by adjusting fuel delivery for heterogeneous fuel-charged configurations (Figure 2). *Id*., 2:51-55, 4:20-45, 5:35-55, 8:26; FIGS 1, 2; EX1003, ¶111.

A POSA would have been motived to incorporate Scherer's transient torque control system, including high-pass filter 4, into Robichaux's engine controller to control torque during transient conditions. EX1003, ¶¶90, 112. Combining Scherer's control system with Robichaux's controller would have provided a control system that precisely controls torque in *both* steady-state and transient conditions. *Id*. Indeed, Scherer expressly discloses using the high-pass filter "permit[s] a comparatively rapid engine torque adjustment which can follow very fast desired engine torque changes." EX1007, 4:40-45, 5:10-15; EX1003, ¶¶90, 112.

Moreover, a POSA would have had a reasonable expectation of success in making this combination. EX1003, ¶¶91, 113. To implement the Robichaux-Scherer combination, during transient conditions, Robichaux's torque signal TQ_ERR would be transmitted to Scherer's transient control branch instead of Robichaux's PID controller 220, and Scherer's high-pass filter 4 would then output a filtered difference signal with low-frequency components removed. *Id.* A POSA would have easily implemented this configuration by modifying the software instructions stored in Robichaux's engine controller such that the torque error signal TQ_ERROR is inputted into a high-pass filter as taught by Scherer. *Id.* A POSA would have also understood that the high-pass filter would have been easily implemented into Robichaux's engine controller through a minor software change. *Id.* Accordingly, combining Scherer's transient torque controller, including high-pass filter 4, with Robichaux's controller that adjusts ignition timing in homogeneous mode and injected fuel quantity in stratified mode would have simply been applying a known technique to a known device to yield the predictable result of more quickly correcting dynamic torque changes. *Id.*

Thus, Robichaux and Scherer render obvious [1.E]. *Id.*, ¶114.

7. [1.F] "a transient torque controller which receives as an input the filtered difference signal and outputs a fuel adjustment signal and a spark adjustment signal"

Robichaux and Scherer render obvious the recited transient torque controller. EX1003, ¶115. Again, Robichaux invited combination with references disclosing transient control functionality to process the torque demand signal's transient component. EX1020, ¶0032; EX1003, ¶¶87, 116. And Scherer discloses such a transient torque controller to correct for transient torque demands that would have been combined with Robichaux's controller. *See supra* Section VII.C.6.

In additional to high-pass filter 4, Scherer's transient control system includes various units, for example, units 6, 7, 9, 10, 11, and 13 in Figure 1, and units 6, 7, and 9 in Figure 2, that produce a spark-timing signal Z_s for adjusting torque output for homogeneous fuel-charged configurations or a fuel-injection-timing signal for adjusting torque output for heterogeneous fuel-charged configurations. *Id*., 2:51-55, 4:20-45, 5:35-55, 8:26, FIGS. 1, 2; EX1003, ¶¶92, 117.

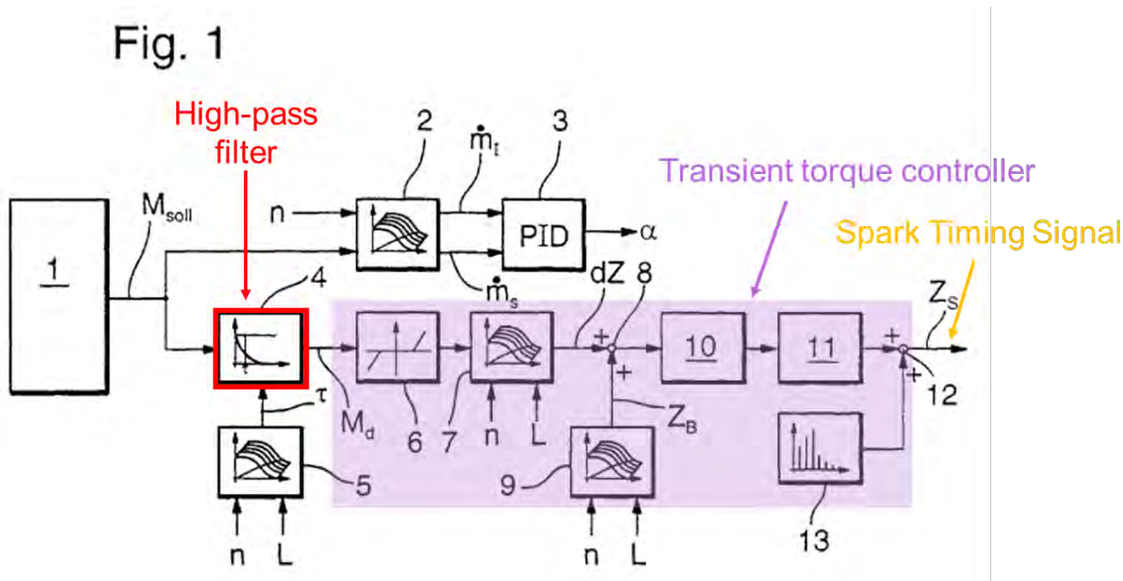

EX1007, FIG. 1 (annotated).

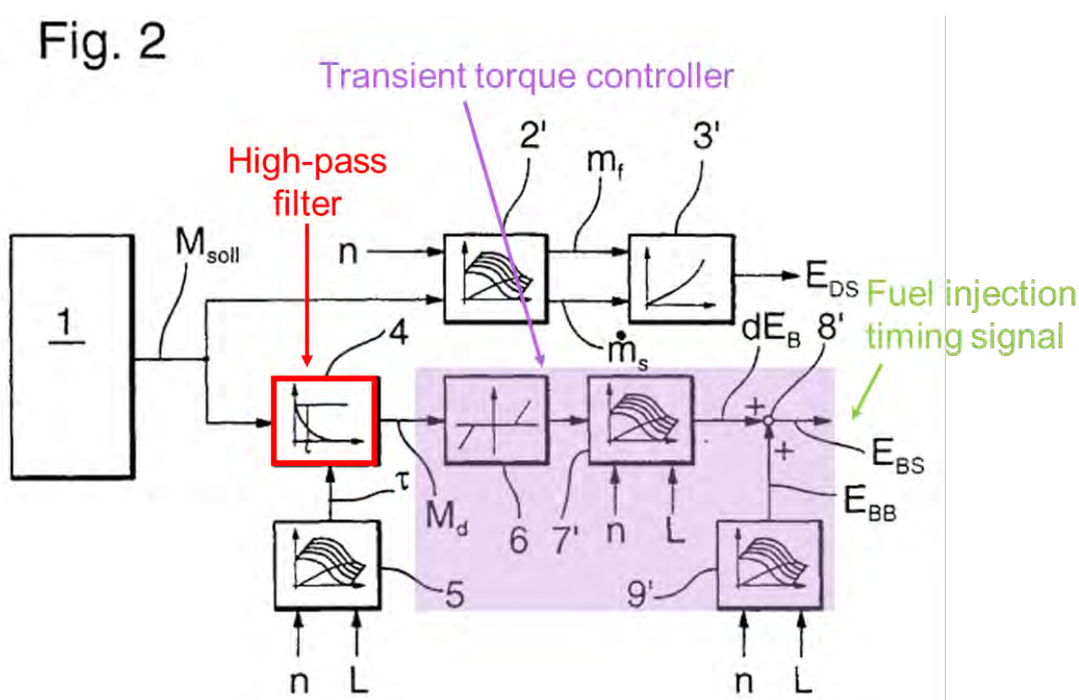

EX1007, FIG. 2 (annotated).

Scherer's transient control system units collectively compose "a transient torque controller." EX1003, ¶118. These control units adjust torque based on the isolated dynamic component of the desired torque signal during transient conditions and, thus, constitute a transient torque controller.[2] EX1003, ¶118; EX1007, 2:51-54, 4:20-5:9, 5:16-55, FIGS. 1, 2.

As explained for [1.E], a POSA would have been motivated to incorporate Scherer's transient torque controller into Robichaux's engine controller to enable torque control during transient conditions. EX1003, ¶¶90, 112, 119. Robichaux suggested using a transient torque controller, and Scherer discloses one such transient torque controller. *Id.* Incorporating Scherer's transient torque controller into Robichaux's engine controller would have allowed Robichaux's engine controller to adjust torque output to a desired value more quickly during transient operation conditions. *Id.*; EX1007, 4:40-45, 5:10-15 ("permit[ting] a comparatively rapid engine torque adjustment which can follow very fast desired engine torque

[2] Notably, a POSA would have understood that different software or instruction modules of a control unit constitute different controllers, as the term "controller" is used in the '565 patent. EX1003, ¶118; *see also* EX1029, 34 (Patent Owner alleges that software embedded within an engine control module constitutes the recited "controller.")

changes"). Accordingly, a POSA would have been motivated to incorporate Scherer's transient controller into Robichaux's engine controller to "adjust[] the engine torque to a desired value with the least possible expenditures in both steady-state and transient engine operation with a comparatively short reaction time." EX1007, 2:38-42; EX1003, ¶¶92, 119. Combining Scherer's transient torque controller with Robichaux's engine controller would have provided a control system that precisely controlled torque in both steady-state conditions and transient conditions. EX1003, ¶¶92, 119.

Moreover, a POSA would have had a reasonable expectation of success in combining Scherer and Robichaux. *Id.*, ¶¶92, 120. A POSA would have easily implemented Scherer's control units 6, 7, 9, 10, 11 and 13 by modifying the software instructions stored in Robichaux's engine controller to perform the same function as disclosed in Scherer and ultimately generate a spark-ignition-timing signal and fuel-delivery-timing signal to control torque. *Id.*, ¶¶92, 120.

Thus, Robichaux and Scherer render obvious [1.F]. *Id.*, ¶121.

D. Robichaux and Scherer render obvious claim 7.

1. [7.P] "A method for controlling a torque output of an engine, the method comprising:"

Claim 7 recites a method analogous to the apparatus of claim 1. [7.P] is similar to [1.P], which is disclosed by Robichaux. *See supra* Section VII.C.1, EX1003, ¶122. Particularly, Robichaux discloses "a system and method for

controlling engine torque using feedback and feed forward control." EX1020, ¶0001. Accordingly, Robichaux discloses [7.P] for at least the same reasons as [1.P]. EX1003, ¶122.

2. [7.A] "estimating a current torque signal from a received current spark angle signal, a received current air/fuel ratio signal and a received estimated air charge signal"

[7.A] is similar to [1.C], which is disclosed, or at least rendered obvious, by Robichaux. *See supra* Section VII.C.4; EX1003, ¶123. For example, Robichaux's engine controller includes an "actual engine brake torque estimator" block 216 that provides an estimate of the actual engine brake torque based on, in part, ignition angle, air/fuel ratio, and airflow. EX1020, ¶¶0033, 0044, FIG. 3; EX1003, ¶123. And a POSA would have understood that the term "airflow" in ¶0033 and Figure 3 of Robichaux referenced "air charge." EX1003, ¶123. Accordingly, Robichaux discloses, or at least renders obvious, an estimator that receives as an input an estimated air charge signal, current spark angle signal, and a current air/fuel ratio signal. *Id.*, ¶123.

Accordingly, Robichaux discloses, or renders obvious, [7.A] for at least the same reasons as [1.C]. *Id.*, ¶124.

3. [7.B] "comparing the estimated current torque signal with a desired torque signal to output a difference signal"

[7.B] is similar to [1.D], which is disclosed by Robichaux. *See supra* Section VII.C.5; EX1003, ¶125. For example, Robichaux's block 218 receives an intermediate torque value, compares this value to the actual engine brake torque TQ_NET ("estimated torque signal"), and produces a torque error signal TQ_ERROR ("a difference signal"). EX1020, ¶0030, FIG. 3; EX1003, ¶125. Accordingly, Robichaux discloses [7.B] for at least the same reasons as [1.D]. EX1003, ¶125.

4. [7.C] "filtering out a plurality of low frequency components from the difference signal"

[7.C] is similar to [1.E], which is rendered obvious by Robichaux and Scherer. *See supra* Section VII.C.6; EX1003, ¶126. Again, Robichaux recognized the need for an alternative to its PID controller 220 during transient torque demands. EX1020, ¶¶0023, 0032, 0046; EX1003, ¶¶85-87, 109. And Scherer discloses a transient torque controller with a high-pass filter that removes the low-frequency component of the torque demand signal, passing only the torque demand signal's high-frequency component. *See supra* Section VII.C.6. A POSA would have been motivated to incorporate Scherer's transient torque control system, including high-pass filter 4, into Robichaux's engine controller, for example, to

control torque during transient conditions, as well as during steady-state conditions. EX1003, ¶¶90-91, 112-114, 127.

Accordingly, Robichaux and Scherer render obvious [7.C] for at least the same reasons as [1.E]. EX1003, ¶127.

5. [7.D] "controlling a fuel adjustment signal and a spark adjustment signal in dependence upon a filtered difference signal"

[7.D] is similar to [1.F], which is rendered obvious by Robichaux and Scherer. *See supra* Section VII.C.7; EX1003, ¶128. Robichaux, as modified by Scherer, provides a filtered difference signal that isolates the transient component. *See supra* Sections VII.C.6-7. Scherer further discloses a transient torque controller that produces a spark-timing signal Zs for homogeneous fuel-charged configurations or a fuel-injection-timing signal for heterogeneous fuel-charged configurations. *See supra* Section VII.C.7; EX1003, ¶¶92, 117, 128. A POSA would have been motivated to incorporate Scherer's transient torque controller into Robichaux's engine controller, for example, to control torque during both transient and steady-state conditions. EX1003, ¶¶92, 119-120, 128.

Accordingly, Robichaux and Scherer render obvious [7.D] for at least the same reasons as [1.F]. *Id.*, ¶129.

VIII. Ground 2: The combination of Robichaux, Scherer, and Takahashi renders obvious claims 2 and 3.

A. Rationale for Combining Robichaux, Scherer, and Takahashi

Robichaux, Scherer, and Takahashi are from the same field of endeavor—engine control systems. EX1003, ¶130. Like Robichaux and Scherer, Takahashi is directed to using a target torque value as input for controlling engine parameters (e.g., fuel quantity and air/fuel ratio). *Id.* Takahashi's "invention is related to the method and system for simultaneous control of the throttle valve and fuel injection to ensure that the torque and air fuel ratio of the automobile engine will reach target values." EX1008, 1:6-9. Takahashi's electronic control module (ECM) 11 has a control unit, a throttle position sensor, an engine speed sensor, an exhaust oxygen sensor, an engine water temperature sensor, and an airflow meter. EX1005, 4:17-40, FIG. 2; EX1008, 3:8-16, FIGS. 1, 13.

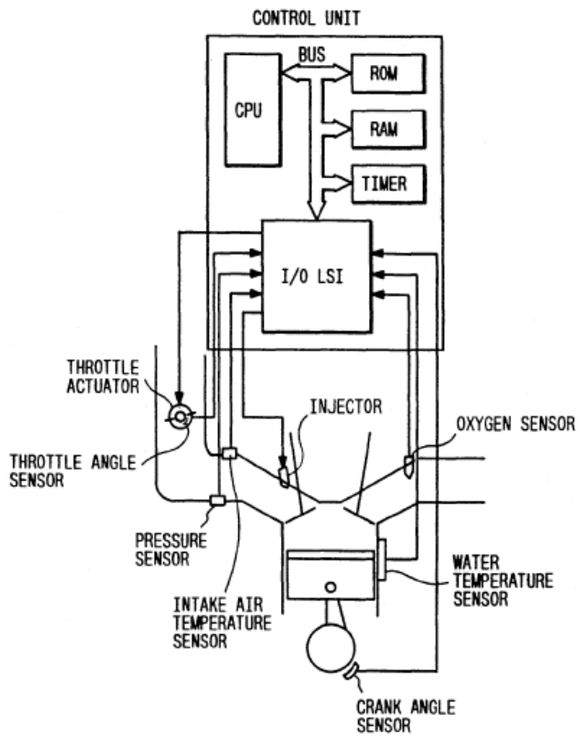

EX1008, FIG. 13.

These components are similar to the Robichaux and Scherer components. EX1003, ¶131.

Combining the teachings of Takahashi with Robichaux and Scherer would have simply involved modifying the engine controller (e.g., programming stored instructions in Robichaux's engine controller 156) to perform the steps taught in the references—a basic task for a POSA. *Id.*, ¶132. A POSA would have been motivated to combine the teachings of Robichaux, Scherer, and Takahashi for at

least the reasons below and would have had a reasonable expectation of success in doing so. *Id.*

The motivation to combine Robichaux and Scherer is discussed in Section VII.B and applies here for claims 2 and 3. *Id.*, ¶133. For example, a POSA would have been motivated to combine Scherer's transient torque control system with Robichaux's engine controller 156 to control torque output during transient conditions. *See supra* Section VII.B; EX1003, ¶133.

A POSA would have also been motivated to combine Takahashi with the Robichaux-Scherer combination. EX1003, ¶134. Robichaux's engine controller 156 includes an electronic throttle module ("air charge controller") for controlling the throttle valve to adjust the cylinder air charge. EX1020, ¶¶0020, 0025; FIG. 2.

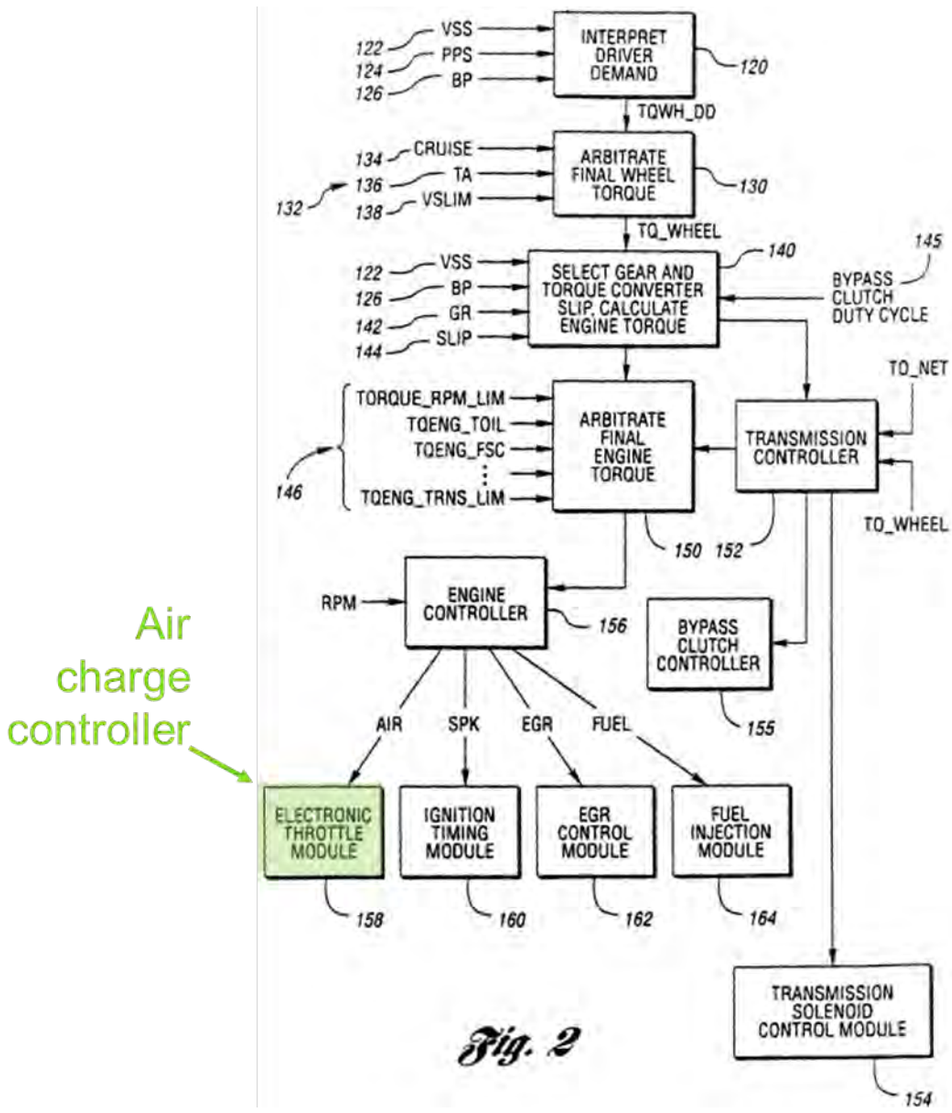

EX1020, FIG. 2 (annotated).

Although Robichaux discloses an air charge controller, Robichaux does not expressly disclose that the air charge controller produces an estimated air charge signal and receives as inputs an air charge demand signal, a throttle position signal, an engine speed signal, a manifold pressure signal, and an air charge