The main difference between the prior art and the '565 patent is the method of correction for a steady state error by high-pass filtering the difference of the torque demanded signal and the estimate of the torque produced signal. (*Id*. at 24.)

A. Challenged Claims

Petitioner challenges claims 1-7 of the '565 patent.

Independent claim 1 recites:

> 1. A device for controlling a torque output of an engine, the device comprising:
>
> a torque demand controller for generating a torque demand signal; and a torque producer which receives the torque demand signal, the torque producer includes:
>
> an estimator which receives as inputs a current spark angle signal, a current air/fuel ratio signal and an estimated air charge signal and outputs an estimated torque signal;
>
> a comparator which receives as inputs the estimated torque signal and a desired torque signal and outputs a difference signal;
>
> a high pass filter which receives as an input the difference signal and outputs a filtered difference signal in which low frequency components are absent; and
>
> a transient torque controller which receives as an input the filtered difference signal and outputs a fuel adjustment signal and a spark adjustment signal.

(Ex. 1001 at 4:1-23.)

Dependent claims 2-6 recite additional features. (*Id*. at 4:24-51.)

Independent claim 7 recites:

> 7. A method for controlling a torque output of an engine, the method comprising:
>
> estimating a current torque signal from a received current spark angle signal, a received current air/fuel ratio signal and a received estimated air charge signal;
>
> comparing the estimated current torque signal with a desired torque signal to output a difference signal;
>
> filtering out a plurality of low frequency components from the difference signal; and
>
> controlling a fuel adjustment signal and a spark adjustment signal in dependence upon a filtered difference signal.

(*Id*. at 4:52-65.)

B. Person of Ordinary Skill in the Art

The level of ordinary skill in the art applicable to the '565 patent around the time of the invention in 2001 is a person with (1) a B.S. in mechanical engineering or a closely related field with three or more years of experience in either engine systems or engine control systems or (2) at least a M.S. in mechanical engineering. (Ex. 2001 at ¶ 14.)

IV. CLAIM CONSTRUCTION

In an *inter partes* review proceeding, "a claim of a patent . . . shall be construed using the same claim construction standard that would be used to construe the claim in a civil action under 35 U.S.C. § 282(b), including construing the claim in accordance with the ordinary and customary meaning of such claim as

understood by one of ordinary skill in the art and the prosecution history pertaining to the patent." 37 C.F.R. § 42.100(b).

None of the claim terms require specific construction and should receive their plain and ordinary meaning, in the context of the '565 patent specification.

Patent owner reserves the right to construe other terms of the '565 patent throughout this proceeding, if the petition is granted, and in pending district court litigation pending against Petitioner and its parent company.

V. OVERVIEW OF CITED PRIOR ART

A. Robichaux and Scherer

In all four Grounds of the Petition, Petitioner relies on European Patent application No. 1 076 165 A2, titled "System and Method for Controlling Engine Torque" ("*Robichaux*") as the primary reference and U.S. Patent No. 6,047,681, titled "Process and Apparatus for Adjusting the Torque of an Internal Combustion Engine" ("*Scherer*") as a secondary reference. (Paper 2 at 26, 58, 75.)

Robichaux is directed to a system and method for controlling engine torque using feedback and feed forward control. (Ex. 2001 at ¶ 26.) The engine controller in *Robichaux* modifies desired engine brake torque based upon current engine operating conditions to determine a requested engine brake torque which it then uses to modify engine control parameters such as air flow, spark, exhaust gas

recirculation (EGR) and fuel flow. (Ex. 2001 at ¶ 26; Ex. 1020 at ln.4 25-29; Fig. 3.)

Robichaux teaches three levels of arbitration to determine requested engine brake torque utilizing feedback and feedforward methods. (*Id*. at ¶ 27.) *Robichaux* discloses a conventional (admitted prior art) system that produces a "difference signal" TQ_ERROR, which is not high-pass filtered. (*Id*. at ¶ 27; Ex.1020 at ln 0030.) *Robichaux* is merely cumulative to the admitted prior art of the '565 patent, and thus should not be considered under 35 U.S.C. § 325(d).

Robichaux does not utilize or suggest a method of correction for a steady state error by using a high-pass filtered output of the difference of the torque demanded signal and the estimate of the torque produced signal as the '565 patent teaches and the challenged claims of the '565 patent positively recite. (Ex. 2001 at ¶ 28.) In other words, there is no disclosure in *Robichaux* of "a high pass filter which receives as an input the difference signal and outputs a filtered difference signal in which low frequency components are absent" (Ex. 1001 at Claim 1) or "filtering out a plurality of low frequency components from the difference signal" (Ex. 1001 at Claim 7) as disclosed in the '565 patent. (Ex. 2001 at ¶ 29.)

Scherer is directed to a system and method for controlling engine torque by regulating the ignition point and air flow rate of an Otto (gasoline) engine, or by regulating the start and duration of fuel injection in a diesel engine. (*Id*. at ¶ 31.)

Scherer claims to improve adjustment of engine torque to a desired value with minimal deviations in both steady-state (quasi-static) and transient (dynamic) operation, with a claimed shorter reaction time. (*Id*.)

One major shortcoming of *Scherer* is that there is no consideration of a stratified charge operation mode for a DISI engine as the '565 patent teaches and the challenged claims of the '565 patent require, and *Scherer* teaches diesel engine control, which the '565 does not teach or claim. (*Id*. at ¶ 32.) Thus, for at least these two reasons, *Scherer* "teaches away" from the challenged claims of the '565 patent. (*Id*.) A second major shortcoming of *Scherer* is that it only filters a desired engine torque signal, which is an input to a comparator, and does not high-pass filter "the difference signal," which is the output of a comparator (Ex. 2001 at ¶¶ 30-39.)

Scherer does disclose homogeneous operation of a spark ignition engine but fails to consider the stratified charge operation of a DISI engine. (*Id*. at ¶ 34.) Another fundamental flaw of *Scherer* is that even though there is a high-pass filter disclosed, it is not employed in the unique manner of the teachings and challenged claims of the '565 patent. (*Id*. at ¶ 35.) *Scherer* uses the high-pass filter with an adjustable decay time constant (t), which is a function of engine speed and load, to generate a filtered dynamic desired torque (M_d) signal. (*Id*. at ¶ 35; Ex. 1007 at 4:31-4; Fig. 1.) *Scherer* thus only filters a desired engine torque signal, which is

an input to a comparator, and does not high-pass filter "the difference signal," which is the output of a comparator. (Ex. 2001 at ¶¶ 30-39.)

In the '565 patent, a "current torque estimator 22 uses the air charge estimate signal, together with a signal representing the current spark angle and a signal representing the current air/fuel ratio to generate a signal representing an estimate of current torque." (*Id*. at ¶ 36; Ex. 1001 at 3:29-39.) It is this signal, "[t]he estimate of the current torque, [which] is compared to the desired torque signal by a comparator 18 to generate an error signal, which is then filtered by the high pass filter 20." (Ex. 2001 at ¶ 37.) This is markedly different and patentably distinct from what *Scherer* teaches. (*Id*. at ¶ 38.) Again, *Scherer* is prior art of record, and should not be considered under 35 U.S.C. § 325(d).

For at least the above-stated reasons, a POSA would not consider combining *Scherer* with *Robichaux* because they teach away from each other and teach away from the challenged claims of the '565 patent. (*Id*. at ¶ 39.)

B. Takahashi

U. S. Patent No. 5,282,449 titled "Method and System for Engine Control" ("*Takahashi*"), is a tertiary reference cited by Petitioner for its Grounds 2 and 4. (Paper 3 at 58, 89.) *Takahashi* discloses controlling the throttle valve and fuel injection in a manner that ensures the engine output torque and air/fuel ratio match target values. (Ex. 2001 at ¶ 40.) *Takahashi* employs a method that calculates

target air mass flow rate as the air mass flow rate at the inlet port which achieves target torque. (*Id*.) The target torque is used to control the fuel injection and electronic throttle control. (*Id*.)

Takahashi is only concerned with the operation of a homogeneous combustion method. (*Id*. at ¶ 41.) *Takahashi* does not disclose spark timing control nor does it teach a DISI engine that operates in a stratified combustion mode. (*Id*.) Figure 1 of *Takahashi* discloses a port fuel injection engine, not a direct injection spark ignition engine (DISI) (*Id*.; Ex. 1008 at Fig. 1.) *Takahashi* is irrelevant to the challenged claims of the '565 patent.

C. Suzuki

Petitioner further relies on U.S. Patent No. 6,006,717 titled "Direct Injection Spark Ignition Type Engine Control Apparatus" ("*Suzuki*") as a tertiary reference to support its assertions in its Grounds 3 and 4. (Paper 3 at 75, 89.)

Suzuki discloses a method of torque control of a DISI engine. (Ex. 2001 at ¶ 43.) The torque control method of *Suzuki* covers the engine combustion operation of both stratified and homogeneous modes. (*Id*.) Torque correction is realized by controlling spark timing for torque correction in homogeneous combustion operation and air/fuel ratio during stratified combustion operation. (*Id*.)

Suzuki thus discloses what the '565 patent admits was well known in the prior art at the time of invention that "[i]n engine torque controllers for DISI

engines, when the engine is operated in stratified mode, spark angle has little influence on the torque produced. The torque producer modifies the air/fuel in order to control the torque produced. Conversely, when the engine is operating in homogenous mode… [t]he torque producer modifies the timing of the spark ignition in order to control the torque produced." (*Id*. at ¶ 44; Ex 1001 at 1:36-45.) Thus, *Suzuki* is merely cumulative of the prior art of record and should not be considered under 35 U.S.C. § 325(d).

Further, *Suzuki* does not disclose "a high pass filter which receives as an input the difference signal and outputs a filtered difference signal in which low frequency components are absent" (Ex. 1001 at Claim 1) or "filtering out a plurality of low frequency components from the difference signal" (Ex. 1001 at Claim 7) as disclosed in the '565 patent. (Ex. 2001 at ¶ 29.)

VI. THE PETITION SHOULD BE REJECTED UNDER § 314(A) BECAUSE PETITIONER IS UNLIKELY TO PREVAIL WITH RESPECT TO ANY CHALLENGED CLAIM

The Board should decline review under 35 U.S.C. § 314(a) because, as set forth in more detail below, there is no likelihood Petitioner will prevail with respect to any challenged claim of the '565 patent.

A. All Grounds of the Petition Fail: Claims 1-7 Are Not Rendered Obvious by *Robichaux* and *Scherer*

A POSA would not consider combining *Scherer* with *Robichaux* because they teach away from each other and from the challenged claims of the '565 patent as shown below. (Ex. 2001 at ¶ 47.)

Petitioner asserts, " . . . the claimed elements were all independently known in the prior art. And combining the prior art references would have simply involved programming a known engine torque controller to collectively perform the prior art techniques disclosed in the references – a trivial task for a person of ordinary skill in the art ("POSA"). As the prior art recognizes, a POSA would have sought to do so to precisely control an engine's torque output with a faster and more accurate response." (Paper 3 at 1-2.)

First, almost all inventions ever made were comprised of a combination of elements that each were independently known in the prior art. Petitioner argues that a POSA would have been well-aware of the prior art references being relied upon by Petitioner. (*Id.*) However, the mere fact that the inventors of these prior art references were inarguably at least POSAs but did not themselves think to combine the individually known elements to arrive at the particularly claimed combination is itself the best, most objective, and most contemporaneous evidence of non-obviousness of the claimed invention set forth and patentably defined in the challenged claims of the '565 patent.

Petitioner uses circular logic to attempt to justify its impermissible hindsight reasoning, namely, that by combining particular elements of the prior art references in a particular manner a POSA would arrive at a claimed combination that has distinct advantages over the prior art. However, again, the mere fact that the inventors of these prior art references were inarguably at least POSAs, and did not themselves think to combine the individually known elements to arrive at the particularly claimed combination in order to achieve these admitted advantages thereof is itself the best, most objective, and most contemporaneous evidence of non-obviousness of the claimed invention set forth and patentably defined in the challenged claims of the '565 patent. In short, the realization that the claimed combination of elements of the challenged claims would yield these distinct advantages over the prior art is what the three co-inventors (Heslop *et al*.) of the '565 patent recognized, but which the prior art inventors did not.

Petitioner states the following regarding *Scherer* and *Robichaux*:

> Incorporating Scherer's transient torque controller into Robichaux's engine controller would have allowed Robichaux's engine controller to adjust torque output to a desired value more quickly during transient operation conditions. . . . ('permit[ting] a comparatively rapid engine torque adjustment which can follow very fast desired engine torque changes.'). Accordingly, a POSA would have been motivated to incorporate Scherer's transient controller into Robichaux's engine to 'adjust[] the engine torque to a desired value with the least possible expenditures in both steady-state and transient engine operation with a comparatively short reaction time.' Combining Scherer's transient torque controller with Robichaux's engine controller would have provided a control system that precisely controlled torque in both steady-state conditions and transient conditions.

(Paper 3 at 53-54.)

Here, Petitioner asserts that the motivation to combine the teachings of *Robichaux* and *Scherer* is that such a combination of elements from these two references would result in certain advantages over the prior art. (*Id.*) Petitioner's analysis is misguided since a proper prior art analysis would explain where the references themselves provide the teaching, motivation or suggestion to combine their teachings. The claimed invention of the presently challenged claims of the '565 patent was created in order to provide advantages over the prior art, including those highlighted by Petitioner. (Ex. 1001 at 1:46-59.)

B. Petitoner Relies on Inpermissible Hindsight

Of course, in hindsight, an accused infringer has the advantage of being able to, nearly 20 years after the priority date of the claimed invention and utilizing technological advances, scour the earth for prior art not of record and, using the claims as a blueprint or roadmap, reconstruct the claimed invention by combining elements from two or more prior art references in order to achieve advantages over the prior art. If achieving an advantage over the prior art not taught by the prior art references by combining teachings of prior art references is a basis for finding claims invalid or unpatentable, then virtually no patent will ever be found valid, as almost all inventions ever made are comprised of a combination of elements that were all independently known in the prior art. It is precisely a claimed

combination of known elements that lies at the heart of virtually all patents ever issued by the United States Patent Office.

The inescapable conclusion is that Petitioner and its expert have used impermissible hindsight in a particularly misguided attempt to stitch together disparate teachings and elements of the prior art references being relied upon in order to attempt to reconstruct the claimed invention defined by the challenged claims. In essence, Petitioner used the challenged claims as a blueprint or roadmap to cobble together the claimed invention set forth in the challenged claims, rather than relying solely upon the teachings of the prior art references themselves.

None of the prior art references relied upon by Petitioner, including *Scherer* which is already of record (i.e., already presented to the Patent Office), and the other references, which are merely cumulative of the admitted prior art in the '565 patent, disclose a key element of the challenged claims of the '565 patent, namely, "a high pass filter which receives as an input the difference signal and outputs a filtered difference signal in which low frequency components are absent" (Ex. 1001 at Claim 1) or "filtering out a plurality of low frequency components from the difference signal" (*Id*. at Claim 7; Ex. 2001 at ¶ 29.)

Petitioner states that "[t]he '565 patent admits that a DISI engine controller's torque producer that modified torque output in terms of fuel adjustment in stratified mode and spark timing in homogeneous mode were known." (Paper No.

3 at 14.) By this statement, Petitioner unwittingly concedes that the prior art references besides *Scherer* that Petitioner relies upon are merely cumulative of the admitted prior art. The other reference that Petitioner relies upon, *Scherer*, is a prior art reference that was already presented to the Patent Office (*i.e.*, is already of record). (Ex. 1002 at 44.) *Scherer* is one of seven prior art references of record in the '565 patent. (*Id.*) Each of these prior art references were thus already considered by the Examiner, including *Scherer*. (*Id.*) *Scherer* should therefore not be considered in the instant matter under 35 U.S.C. § 325(d).

Petitioner asserts, "[a]ccording to the '565 patent, these known DISI engine controllers allegedly could not provide fuel and spark adjustment signals that accounted for differences between estimated output torque and demand torque." (Paper No. 3 at 14.) Petitioner's assertion constitutes a mischaracterization of the '565 patent's teachings. (Ex. 2001 at ¶¶ 20-24.) Rather, the '565 patent explicitly states, "[t]herefore, there is a need for a method of correction of a steady state error between the torque demanded and an estimate of the torque produced." (Ex. 1001 at 1:57-59.) The way in which the '565 patent accomplishes its objective of meeting this need in the art is by employing "a high pass filter which receives as an input the difference signal and outputs a filtered difference signal in which low frequency components are absent" (Ex. 1001 at Claim 1) or "filtering out a

plurality of low frequency components from the difference signal" *See* Ex. 2001 at ¶ 29; Ex. 1001 at Claim 7.

Scherer, as Petitioner admits, only discloses a "controller [that] includes a transient torque signal-processing branch that includes a high-pass filter 4 that receives a desired engine torque signal and outputs a dynamic torque component to a torque controller that adjusts torque output by correcting spark timing for homogeneous fuel-charged configurations or fuel delivery for heterogeneous fuel-charged configurations." (Paper No. 3 at 21.)

Petitioner attempts to modify *Robichaux*, which is cumulative of the admitted prior art in the '565 patent, by using a teaching of *Scherer*, which is already of record in the '565 patent, to arrive at a claimed combination that neither of these references discloses. (Ex. 2001 at ¶¶ 25-39.) More particularly, neither of these references, nor any other prior art reference relied upon by Petitioner, discloses "a high pass filter which receives as an input the difference signal and outputs a filtered difference signal in which low frequency components are absent" (Ex. 1001 at Claim 1) or "filtering out a plurality of low frequency components from the difference signal" (Ex. 1001 at Claim 7.) *Scherer* only filters a desired engine torque signal and does not high-pass filter "the difference signal." (Ex. 2001 at ¶¶ 30-39.)

Robichaux discloses a conventional (admitted prior art) system that produces a "difference signal" which is not high-pass filtered. (*Id*. at ¶¶ 26-29.) Combining these two prior art references, even in hindsight, would result in a desired engine torque signal which is high-pass filtered, and a "difference signal" which is not high-pass filtered. (*Id*. at ¶¶ 47-55.) Petitioner's 103 page Petition makes a valiant effort to camouflage these fundamental deficiencies of the prior art but falls well short of the mark.

VII. CONCLUSION

For the foregoing reasons, the Petition to institute *inter partes* review of any claim of the '565 patent should be denied.

Dated: May 7, 2020

Respectfully submitted,

/s/ *Timothy Devlin*

Timothy Devlin
Registration No. 41,706
DEVLIN LAW FIRM LLC
1526 Gilpin Avenue
Wilmington, DE 19806
(302)-449-9010
TD-PTAB@devlinlawfirm.com
Attorney for Patent Owner

CERTIFICATE OF WORD COUNT

Pursuant to 37 C.F.R. § 42.24(d), the undersigned certifies that there are 6,032 words in this paper, excluding any table of contents, table of authorities, mandatory notices under 37 C.F.R. § 42.8, certificate of word count, certificate of service, or appendix of exhibits. This certification relies on the word count of the word-processing system used to prepare this paper.

Respectfully submitted,

/s/ *Timothy Devlin*

Timothy Devlin
Registration No. 41,706
DEVLIN LAW FIRM LLC
1526 Gilpin Avenue
Wilmington, DE 19806
(302)-449-9010
TD-PTAB@devlinlawfirm.com
Attorney for Patent Owner

CERTIFICATE OF SERVICE

I hereby certify that on May 7, 2020, I caused a true and correct copy of the foregoing materials to be served via the Patent Office electronic filing system, and electronic service via email to the following attorneys of record pursuant to Petitioner's consent.

LEAD COUNSEL	**BACKUP COUNSEL**
Michael D. Specht mspecht-PTAB@sternekessler.com STERNE, KESSLER, GOLDSTEIN & FOX P.L.L.C. 1100 New York Avenue, N.W. Washington, DC 20005 (202) 371-2600	Jason A. Fitzsimmons, Reg. No. 65,367 jfitzsimmons-PTAB@sternekessler.com Danny E. Yonan, Reg. No. 53,812 dyonan-PTAB@sternekessler.com Kyle Conklin, Reg. No. 59,425 dyonan-PTAB@sternekessler.com John D. Higgins, Reg. No. 74,992 jhiggins-PTAB@sternekessler.com STERNE, KESSLER, GOLDSTEIN & FOX P.L.L.C. 1100 New York Avenue, N.W. Washington, D.C. 20005 Tel.: 202-371-2600 Fax: 202-371-2540

Respectfully submitted,

/s/ *Timothy Devlin*
Timothy Devlin
Registration No. 41,706
DEVLIN LAW FIRM LLC
1526 Gilpin Ave.
Wilmington, DE 19806
(302)-449-9010
TD-PTAB@devlinlawfirm.com
Attorney for Patent Owner

UNITED STATES PATENT AND TRADEMARK OFFICE

BEFORE THE PATENT TRIAL AND APPEAL BOARD

Volkswagen Group of America, Inc.,
Petitioner

v.

Michigan Motor Technologies LLC,
Patent Owner

Case IPR2020-00445
Patent No. 6,581,565

DECLARATION OF DR. RUSSELL LEONARD

MMT 2001

TABLE OF CONTENTS

I. Introduction 1

II. Background 1

III. Level of ordinary skill in the art 4

IV. Understanding of the law 4

a. Claim construction 4

b. Obviousness 5

V. Overview of the '565 patent 6

VI. Overview of the prior art 7

a. Robichaux 7

b. Scherer 8

c. Takahashi 10

d. Suzuki 11

VII. No motivation to combine The primary references 12

VIII. Availability for Cross-examination 14

IX. Right to supplement 14

X. Jurat 14

1. I, Dr. Russell Leonard, declare as follows:

I. INTRODUCTION

2. I have been retained as an expert in this proceeding by counsel for Michigan Motor Technologies (MMT). I have been asked for my expert conclusions.

II. BACKGROUND

3. I obtained my Bachelor's degree in Industrial Arts Education with an automotive emphasis from Central Michigan University in 1991. Next, I earned a Master of Education from Wayne State University in 1997, and a Ph.D. in Higher Educational Leadership from Western Michigan University in 2016.

4. I am currently a Professor at Ferris State University in the Automotive Department of the School of Automotive and Heavy Equipment where I teach in both the Automotive Engineering Technology and Automotive Service programs.

5. I began my automotive career working as a mechanic on civilian automobiles and military vehicles. After transitioning to building prototype vehicles at Roush, I started a new position as a contractor to Ford Motor Company teaching engineers on the topic of Ford powertrain electronic controls. I learned an incredible amount of detail that augmented my technician viewpoint with an

understanding from a design and manufacturing perspective. While earning my master's degree, a classmate suggested that I should apply to Hughes Aircraft.

6. At Hughes, I worked as a Systems Engineer designing and developing training for General Motors. The last assignment I performed at Hughes Aircraft was integrating advanced military technologies with civilian applications. It was during this project with Hughes that I was encouraged to apply for a position at General Motors as a Service Engineer for Cadillac.

7. While at Cadillac, I assisted field technicians with repairs over the phone, tracked trends and created engineering bulletins and campaigns as required. The next position in my General Motors career was a release engineer of diagnostic scan tool software after an internal transfer. In this position, I wrote code for the Tech 2 scan tool to request and receive data from various computer control modules for numerous GM vehicles to not only comply with OBD II, but to be a useful tool to the repair technician.

8. After the September 11th terrorist attack, I decided to share my experiences and enjoyment of automobiles with future generations, so I became an automotive professor at Ferris State University. I earned my Ph.D. during this time while teaching many automotive subjects in the automotive service program for technicians and in the automotive engineering technology program for engineering technologists.

9. I am a continuing member of multiple professional organizations, including SAE International, where I am the faculty advisor at Ferris State University for the student chapter of the collegiate design series, Baja SAE. At ASTM International, I am a voting member of Committee D02 on Petroleum Products, Liquid Fuels, and Lubricants, and Committee D15 on Engine Coolants and Related Fluids. Additionally, I am a task group member of four work items within D15.

10. My career thus far includes 17 years teaching automotive engineering technology and servicing at a university, 7 years as an engineer for major automotive and technology corporations, 3 years as a trainer of powertrain electronic controls for an automobile manufacturer, 19 years of service in the United States military, 7 years of which I was a mechanic, and 4 years as a civilian automobile mechanic.

11. A copy of my curriculum vitae is attached as Appendix A, which contains further details regarding my experience, education, and other qualifications to render an expert opinion in connection with this proceeding.

12. I am being compensated at my normal consulting rate of $240/hour for my work, but my opinions are based on my own views of the patented technology and the prior art. My compensation is not dependent on the outcome of

this proceeding and in no way influences the substance of my statements in this declaration.

13. I have no financial interests in the patent owner. Similarly, I have no financial interest in the '565 patent.

III. LEVEL OF ORDINARY SKILL IN THE ART

14. The level of ordinary skill in the art applicable to the '565 patent around the time of the invention in 2002 is a person with (1) a B.S. in mechanical engineering or a closely related field with three or more years of experience in either engine systems or engine control systems or (2) at least a M.S. in mechanical engineering.

IV. UNDERSTANDING OF THE LAW

15. I am not an attorney. For the purposes of this declaration, the patent owner's counsel has informed me about certain aspects of the law that are relevant to my opinions. I have applied those legal principles in arriving at my conclusions expressed in this Declaration.

a. Claim construction

16. I understand that "a claim of a patent . . . shall be construed using the same claim construction standard that would be used to construe the claim including construing the claim in accordance with the ordinary and customary

meaning of such claim as understood by one of ordinary skill in the art and the prosecution history pertaining to the patent."

17. I understand that claim terms that are not construed by the Board should be given their ordinary and customary meaning as would have been understood by a person of ordinary skill in the art at the time of the claimed invention.

18. I also understand that a "means-plus-function" claim term is a term that recites a certain function but does not recite sufficient structure for performing that function. I understand that means-plus-function terms are limited to the function recited in the claim term and the specific structure that is disclosed in the patent's specification for performing that function and structures that are equivalent to the disclosed structures. Thus, I have been informed and understand that construing a means-plus-function claim term is a two-step process. First, the claimed function of the term must be identified. Second, the structure or structures described in the specification for performing that function must be identified.

b. Obviousness

19. I also understand that a showing of obviousness must include demonstrating that the cited references disclose each element of a challenged claim.

V. OVERVIEW OF THE '565 PATENT

20. The basic inventive concept disclosed and claimed in the subject '565 patent is to, in the controlling of engine torque of a spark ignition direct injection internal combustion engine, teach a method in which torque is controlled dependent upon a filtered difference signal of desired torque and current torque estimate signals.

21. A high pass filter is used to filter the difference signal of desired torque and current torque estimate signals and it is this high pass filtering of the difference of two signals that makes the '565 patent unique. It is the filtered difference signal that controls engine torque.

22. The '565 patent discloses what was well known in the prior art that "[i]n engine torque controllers for DISI engines, when the engine is operated in stratified mode, spark angle has little influence on the torque produced. The torque producer modifies the air/fuel in order to control the torque produced. Conversely, when the engine is operating in homogenous mode… [t]he torque producer modifies the timing of the spark ignition in order to control the torque produce." (EX 1001, '565 at 1:36-45.)

23. The main difference between the prior art and the '565 patent is the method of correction for a steady state error by using a high pass filtered output of

the difference of the torque demanded signal and the estimate of the torque produced signal.

24. A better description of the uniqueness of the '565 patent's method is to say that the torque demand signal represents a feedforward signal and that the torque produced signal represents a feedback signal. These two signals are run through a comparator 18 that generates an error signal. The error signal is generated by subtracting the current torque estimate from the torque demand signal. EX 1001 at 3:34-39 and Figure 3. This error signal indicates instances where torque demand is less than torque produced and instances where torque demand is greater than torque produced. The high pass filter receives the error signal and blocks (filters out) smaller differences from the comparator 18 and only allows larger differences to pass through to the transient torque controller. Indeed, the '565 invention does not expend energy with smaller, less significant errors by only acting upon larger errors. This design minimizes hunting, where the system is continuously chasing changes back and forth.

VI. OVERVIEW OF THE PRIOR ART

a. Robichaux

25. Robichaux is the primary reference used against all claims. Robichaux's primary scope is directed to a system and method for controlling engine torque using feedback and feed forward control.

26. The engine controller in Robichaux modifies desired engine brake torque based current engine operating conditions to determine a requested engine brake torque which it then uses to modify engine control parameters such as air flow, spark, exhaust gas recirculation (EGR) and fuel. (EX. 1020 pg.4 at 25-29 and figure 3.)

27. Robichaux teaches three levels of arbitration to determine requested engine brake torque utilizing feedback and feedforward methods. Robichaux discloses a conventional (admitted prior art) system that produces a "difference signal" TQ_ERROR, which is not high-pass filtered. EX1020 at 0030.

28. The alleged invention in Robichaux does not utilize nor suggest a method of correction for a steady state error by using a high pass filtered output of the difference of the torque demanded signal and the estimate of the torque produced signal as the '565 patent teaches.

29. In other words, there is no disclosure in Robichaux of "a high pass filter which receives as an input the difference signal and outputs a filtered difference signal in which low frequency components are absent" (claim 1) or "filtering out a plurality of low frequency components from the difference signal" (claim 7) as disclosed in the '565 patent.

b. Scherer

30. Scherer, the secondary reference used in all of Petitioner's claims.

31. The primary scope of Scherer is directed to a system and method for controlling engine torque regulating the ignition point and air flow rate on an Otto (gasoline) engine, or by regulating the start and duration of fuel injection in a diesel engine. Scherer claims to improve adjustment of engine torque to a desired value with minimal deviations in both steady-state (quasi-static) and transient (dynamic) operation, with a claimed shorter reaction time.

32. The issue with Scherer is that there is no consideration of a stratified charge operation mode for a DISI engine as the '565 teaches and Scherer teaches diesel engine control, which the '565 does not teach. In this light, Scherer "teaches away" from the '565 patent with technology relating to diesel engines and not teaching to Direct Injection Spark Ignition (DISI) engine's unique operational characteristics.

33. A POSA would know that diesel engines operate differently than a spark ignition engine in that a diesel engine does not have spark plugs. A diesel engine relies upon the heat of compression to ignite the air/fuel mixture.

34. Scherer does disclose homogeneous operation of a spark ignition engine, but fails to consider the stratified charge operation of a DISI engine.

35. Another fundamental flaw of Scherer is that even though there is a high pass filter disclosed, it is not employed in the unique manner of the teachings of the '565. Scherer uses the high pass filter with an adjustable decay time

constant (t), which is a function of engine speed and load to generate the filtered output of dynamic desired torque (M_d). EX 1007 at 4:31-45 and Figure 1.

36. In the '565 patent, a "current torque estimator 22 uses the air charge estimate signal, together with a signal representing the current spark angle and a signal representing the current air/fuel ratio to generate a signal representing an estimate of current torque." EX 1001at 3:29-39.

37. It is this signal, "[t]he estimate of the current torque, [which] is compared to the desired torque signal by a comparator 18 to generate an error signal, which is then filtered by the high pass filter 20."

38. Indeed, this is a markedly different approach in the '565 than what Scherer teaches.

39. For these reasons, I do not believe a POSA would consider combining Scherer with Robichaux or any other teaching because they teach away from each other and the '565 patent.

c. Takahashi

40. Takahashi is a tertiary reference that controls the throttle valve and fuel injection in a manner that ensures the engine output torque and air/fuel ratio matches target values. It achieves this goal with a method that calculates target air mass flow rate as "the air mass flow rate at the inlet port which achieves target

torque." The target torque is used to control the fuel injection and electronic throttle control.

41. Takahashi is only concerned with the operation of a homogeneous combustion method. Takahashi does not disclose spark timing control nor does it teach to DISI engines that operate in a stratified combustion mode. Figure 1 of Takahashi discloses a port fuel injection engine, not a direct injection spark ignition engine (DISI) EX 1008 Figure 1.

d. Suzuki

42. Suzuki is the fourth reference asserted by the petitioner.

43. Suzuki discloses a method of torque control of a direct injection spark ignition (DISI) engine. The torque control method covers the engine combustion operation of both stratified and homogeneous modes. Torque correction is realized by controlling at minimum, spark timing for torque correction in homogeneous combustion and air/fuel ratio during stratified combustion operation.

44. Like Suzuki, the '565 patent discloses what was well known in the prior art at the time of invention that "[i]n engine torque controllers for DISI engines, when the engine is operated in stratified mode, spark angle has little influence on the torque produced. The torque producer modifies the air/fuel in order to control the torque produced. Conversely, when the engine is operating in

homogenous mode… [t]he torque producer modifies the timing of the spark ignition in order to control the torque produce." (EX 1001, '565 at 1:36-45.)

45. In addition, a POSA would know that in homogeneous mode, air/fuel ratio manipulation has a much less correcting affect when compared to spark timing. Again, Suzuki reiterates what was already known at the time of the '565 invention.

46. Suzuki lacks the disclosure of the usage of a high pass filter.

VII. NO MOTIVATION TO COMBINE THE PRIMARY REFERENCES

47. A POSA would not consider combining Scherer with Robichaux or any other teaching because they teach away from each other and the '565 patent as shown below.

48. The issues with Scherer are that there is no consideration of a stratified charge operation mode for a DISI engine as the '565 teaches and Scherer teaches diesel engine control, which the '565 does not teach. In this light, Scherer "teaches away" from the '565 patent with technology relating to diesel engines and not teaching to Direct Injection Spark Ignition (DISI) engine's unique operational characteristics.

49. A POSA would know that diesel engines operate differently than a spark ignition engine in that a diesel engine does not have spark plugs. A diesel engine relies upon the heat of compression to ignite the air/fuel mixture.

50. Scherer does disclose homogeneous operation of a spark ignition engine, but fails to consider the stratified charge operation of a DISI engine.

51. Another fundamental flaw of Scherer is that even though there is a high pass filter disclosed, it is not employed in the unique manner of the teachings of the '565. Scherer uses the high pass filter with an adjustable decay time constant (t), which is a function of engine speed and load to generate the filtered output of dynamic desired torque (M_d). EX 1007 at 4:31-45 and Figure 1.

52. In the '565 patent, a "current torque estimator 22 uses the air charge estimate signal, together with a signal representing the current spark angle and a signal representing the current air/fuel ratio to generate a signal representing an estimate of current torque." EX 1001at 3:29-39.

53. It is this signal, "[t]he estimate of the current torque, [which] is compared to the desired torque signal by a comparator 18 to generate an error signal, which is then filtered by the high pass filter 20."

54. Indeed, this is a markedly different approach in the '565 than what Scherer teaches.

55. For these reasons, I do not believe a POSA would consider combining Scherer with Robichaux or any other teaching because they teach away from each other and the '565 patent.

VIII. AVAILABILITY FOR CROSS-EXAMINATION

56. In signing this declaration, I recognize that the declaration will be filed as evidence in a contested case before the Patent Trial and Appeal Board of the United States Patent and Trademark Office. I also recognize that I may be subject to cross examination in the case and that cross examination will take place within the United States. If cross examination is required of me, I will appear for cross examination within the United States during the time allotted for cross examination.

IX. RIGHT TO SUPPLEMENT

57. I reserve the right to supplement my opinions in the future to respond to any arguments that the Petitioner raises and to consider new information as it becomes available to me.

X. JURAT

58. I declare that all statements made herein of my own knowledge are true and that all statements made on information and belief are believed to be true; and further that these statements were made with the knowledge that willful false statements and the like so made are punishable by fine or imprisonment, or both, under Section 1001 of Title 18 of the United States Code.

Dated: May 7, 2020

Dr. Russell Leonard

Appendix A

Russell A. Leonard, Jr., PhD

Work: 231-591-2357

E-mail: leonardr@ferris.edu

EDUCATION **Doctor of Philosophy, Higher Educational Leadership**, June 2016
Western Michigan University, Kalamazoo, Michigan

Master of Education, December 1997, magna cum laude
Wayne State University, Detroit, Michigan
Curriculum: Instructional Systems Design & Adult Education

Bachelor of Science in Secondary Education, June 1991
Central Michigan University, Mount Pleasant, Michigan
Major: K-12 Industrial Engineering & Technology Education, Automotive Focus

WORK EXPERIENCE: FERRIS STATE UNIVERSITY

August 2018 - Present **Professor, Ferris State University**. College of Engineering Technology, School of Automotive and Heavy Equipment
Currently instructing in both the Automotive Service and Automotive Engineering Technology programs

August 2017 - Present **Chair, University Curriculum Committee**.
This position oversees curriculum changes at the university level, creates, enforces and instructs on university policy, reports to the Academic Senate and works closely with the Academic Affairs office and faculty

August 2015 - Present **Faculty Advisor, SAE Baja Racing Club**.
SAE Baja is a student led team that designs, builds, tests and races an off-road buggy. The team competes against other universities from around the world

August 2008 - August 2018 **Associate Professor, Ferris State University**. College of Engineering Technology,
School of Automotive and Heavy Equipment
Instructed in both the Automotive Service and Automotive Engineering Technology programs

August 2008 - **Motorcycle Safety Foundation (MSF) Ridercoach**.

PETITIONER'S EXHIBIT 1002
US PATENT NO. 6,581,565
Page 7937

Corporate and Professional
August 2015 Development Center
Instructed the Basic Rider Course for the Motorcycle Safety Foundation Program

August 2010 - **Coordinator, Automotive Engineering Technology Program, Ferris State University**.
August 2012 College of Engineering Technology, School of Automotive and Heavy Equipment
Part-time administrator with teaching duties for the Automotive Engineering Technology program

August 2002 - **Assistant Professor, Ferris State University**. College of Technology, Automotive August 2008 Department
Instructed in both the Automotive Service and Automotive Engineering Technology programs

WORK EXPERIENCE: GENERAL MOTORS

June 1998 - **Release Engineer**, Service Operations
August 2002 Developed and validated diagnostic tool software for various vehicle Electronic Control Modules

August 1997- **Service Engineer**, Cadillac Motor Car Division
June 1998 Assisted technicians in diagnosis and repair of Cadillac vehicles, maintained an information database, identified and tracked trends, performed root-cause analysis, and recommended solutions

OTHER WORK EXPERIENCE

August 2008 - **Harley-Davidson Riding Academy Motorcycle Safety instructor,** Grand Rapids Present Harley-Davidson
Instruct motorcycle rider safety course for Grand Rapids Harley-Davidson's Riding Academy program

June 1995 - **Systems Engineer, Hughes Training Inc. (Hughes Aircraft Co.)**
August 1997 Designed and developed engineering courses for various General Motors' advanced engineering projects

July 1986 - **Sergeant E-5, United States Army Reserve (retired)**
July 2005 Certified military instructor in three areas of expertise: Light-Wheeled Vehicle Mechanics, Crane Operation, and Battlefield Communication

October 1992 - June 1995 **Engineering Instructor, Ford Motor Co. (via Bartech)**
Delivered stand-up instruction in a company-sponsored engineering university; created lesson plans and wrote textbooks; developed subject-matter expertise in powertrain controls, from microprocessor strategy to OBD-II systems

June - October 1992 **Prototype Technician, Roush Industries**
Prepared prototype vehicles for engineering testing

July 1991 - June 1992 **Technician, Lakeside Toyota-Lexus**
Performed light through heavy repairs, warranty diagnosis, and vehicle maintenance programs

January - May 1991 **Student Teacher, Midland Dow High School**
Instructed Automotive Technology and Advanced Drafting

January - May 1990 **Teaching Assistant, Central Michigan University**
Assisted Professor in automotive maintenance course by delivering course material and developing lab activities

1988-1991 **Automotive Technician, Souder's Amoco**
Performed light repairs specializing in no-starts

SPECIAL SKILLS

Canvas and Blackboard Learning Management System (LMS)
Instructional Systems Design
Microsoft Word, Excel, Project, and PowerPoint
Benchmark stand-up instruction
Subject-matter expertise:
- Vehicle ECM communication
  - Keyword protocol 82 and 2000, Class 2, CAN, GM LAN, J1979 (CARB) and J2190 Powertrain controls
- Automotive transmissions (electrical and mechanical)
- Engine design and performance
- Spark ignition
- Compression Ignition
- Emission controls
- Braking systems
- HVAC
- Suspension and steering systems
- Military vehicle design and performance
- Military communication networks and systems
- Satellite communication hardware and software

PROFESSIONAL ASSOCIATIONS / CERTIFICATIONS / HONORS

ASE Master Recertified Automobile Technician
ASE Recertified, Advanced Engine Performance (L-1)
ASE Certified Truck Technician
Ferris Foundation Grant recipient, 2009, 2010 & 2011
Registered Student Organization Advisor of the Year, 2019 (SAE Baja)
Society of Automotive Engineers (SAE) member
Automotive Transmission Rebuilders Association (ATRA) member
ASTM International Voting Member, D02 & D15
Faculty Advisor, SAE Baja Racing Club
Former Faculty Advisor, Sigma Chi Fraternity
Former Faculty Advisor, Lambda Chi Alpha Fraternity
Former Faculty Advisor, High Performance Motorsports Student Organization (HPMSO)
Former Ferris State University Academic Senate Diversity Committee member
GM President's Council Honors
Ford Powertrain Customer Service Award
Security Clearance: SECRET (expired)

PUBLICATIONS

Leonard, Russell A. Jr., "Females in Automotive Careers: Career Decision-Making Influences and Experiences During University Preparation and Beyond" (2016). *Dissertations.* Paper 1608. http://scholarworks.wmich.edu/dissertations/1608

I have reviewed the Manual Drivetrains and Axles book by Halderman/Birch multiple times including the latest edition (7th) dated 2015, Prentice Hall, 978-0-13-351504-6.

PRESENTATIONS

"How to Make Biodiesel" for the Energy Summer Youth Camp on July 12-16, 2010. The students made biodiesel fuel out of waste vegetable oil from the University's dining facility, and then used it to fuel the test diesel engine.

Biodiesel Processing, Michigan Energy conference, April 7-8, 2009.

Russell A. Leonard, Jr., PhD
2275 Kinney Ave NW
Grand Rapids, MI 49534
Cell: 616-970-1734
E-mail: rleonardjr@hotmail.com

EDUCATION

Doctor of Philosophy, Higher Educational Leadership, June 2016
Western Michigan University, Kalamazoo, Michigan

Master of Education, December 1997, magna cum laude
Wayne State University, Detroit, Michigan
Curriculum: Instructional Systems Design & Adult Education

Bachelor of Science in Secondary Education, June 1991
Central Michigan University, Mount Pleasant, Michigan
Major: K-12 Industrial Engineering & Technology Education, automotive focus

WORK EXPERIENCE: FERRIS STATE UNIVERSITY

August 2018 - Present

Professor, Ferris State University. College of Engineering Technology, Present
School of Automotive and Heavy Equipment
Currently instructing in both the Automotive Service and Automotive Engineering Technology programs

August 2017 - Present

Chair, University Curriculum Committee.
This position oversees curriculum changes at the university level, creates, enforces and instructs on university policy, reports to the Academic Senate and works closely with the Academic Affairs office and faculty

August 2015 – Present

Faculty Advisor, SAE Baja Racing Club
SAE Baja is a student led team that designs, builds, tests and races an off-road buggy. The team competes against other universities

August 2010 - August 2012

Coordinator, Automotive Engineering Technology, Ferris State University.
College of Engineering Technology, School of Automotive and Heavy Equipment

Part-time administrator with teaching duties for the Automotive Engineering Technology program

August 2008 - August 2018 **Associate Professor, Ferris State University**. College of Engineering Technology, School of Automotive and Heavy Equipment

Instructed in both the Automotive Service and Automotive Engineering Technology programs

August 2008 - 2017 **Ridercoach**, **Motorcycle Safety Foundation (MSF)**
Ferris State University Corporate and Professional Development Center
Instructed the Basic Rider Course for the Motorcycle Safety Foundation Program

August 2002 - August 2008 **Assistant Professor, Ferris State University**. College of Technology, Automotive Department

Instructed in both the Automotive Service and Automotive Engineering Technology programs

WORK EXPERIENCE: GENERAL MOTORS

June 1998 - August 2002 **Release Engineer**, Service Operations
Develop and validate diagnostic tool software for various vehicle Electronic Control Modules

August 1997- June 1998 **Service Engineer**, Cadillac Motor Car Division
Assisted technicians in diagnosis and repair of Cadillac vehicles, maintained an information database, identified and tracked trends, performed root-cause analysis, and recommended solutions

OTHER WORK EXPERIENCE

August 2008- Present **Harley-Davidson Riding Academy Instructor,** Grand Rapids Harley-Davidson
Instruct basic motorcycle rider safety course for the Harley-Davidson Riding Academy program

June 1995- August 1997 **Systems Engineer, Hughes Training Inc. (Hughes Aircraft Co.)**
Designed and developed engineering courses for various General Motors' projects

July 1986 - **Sergeant E-5, United States Army Reserve (retired)**

July 2005	Certified military instructor in three areas of expertise: Light-Wheeled Vehicle Mechanics, Crane Operation, and Battlefield Communication with a Secret Security Clearance
October 1992 -June 1995	**Engineering Instructor, Ford Motor Co. (via Bartech)** Delivered stand-up instruction in a company-sponsored engineering university; created lesson plans and co-wrote textbooks; developed subject-matter expertise in powertrain controls, from microprocessor strategy to OBD-II systems
June – October 1992	**Prototype Technician, Roush Industries** Prepared prototype vehicles for engineering testing
July 1991 – June 1992	**Technician, Lakeside Toyota-Lexus** Performed light through heavy repairs, warranty diagnosis, and vehicle maintenance programs
January – May 1991	**Student Teacher, Midland Dow High School** Instructed Automotive Technology and Advanced Drafting
January – May 1990	**Teaching Assistant, Central Michigan University** Assisted Professor in automotive maintenance course by delivering course material and developing lab activities
1988-1991	**Automotive Technician, Souder's Amoco** Performed light repairs specializing in no-starts

COURSES TAUGHT AT FERRIS STATE UNIVERSITY

AUTO 111 Manual Transmissions and Drivelines
AUTO 112 Automotive Brake Systems
AUTO 113 Automotive Electricity and Electronics
AUTO 116 Engine Electrical Systems
AUTO 117 Electronic Fuel Management Systems
AUTO 200 Service Area
AUTO 211 Automatic Transmission
AUTO 214 Automotive HVAC
AUTO 291 Auto Service Internship
AUTO 450 Automotive Fuels and Lubes
AUTO 460 Emissions Systems
AUTO 493 Automotive Engineering Technology Internship
AMGT 300 Automotive Materials
AMGT 493 Automotive Management Internship
FSUS 100 Freshman Seminar
HEQT 230 Diesel Fuel Systems Technology
HEQT 193 Industry Internship
HSET 393 Industry Internship.

SPECIAL SKILLS

Canvas and Blackboard Learning Management Systems (LMS)
Instructional Systems Design
Subject-matter expertise:
Automotive Fuels and Lubricants
Automotive Coolants and other Liquids
Vehicle ECM and Scan Tool Communication
Powertrain Controls, both Hardware and Software
Automotive Transmissions, Electrical, Mechanical, and Software Calibration
Engine Design, Performance and Calibration
Spark Ignition
Compression Ignition
Gasoline and Diesel Emission Controls
Braking Systems
HVAC
Suspension and Steering Systems
Military Vehicle Design and Performance
Military Communication Networks and Systems
Satellite Communication Hardware and Software
Lift and Load (Crane Operation) Specialist

PROFESSIONAL ASSOCIATIONS *I* CERTIFICATIONS *I* HONORS

ASE Master Recertified Automobile Technician
ASE Recertified, Advanced Engine Performance (L-1)
ASE Certified Truck Technician
Ferris Foundation Grant recipient, 2009, 2010 & 2011
Society of Automotive Engineers (SAE) member
Automotive Transmission Rebuilders Association (ATRA) member
Faculty Advisor, SAE Baja Racing Club
Former Faculty Advisor, Sigma Chi Fraternity
Former Faculty Advisor, Lambda Chi Alpha Fraternity
Former Faculty Advisor, High Performance Motorsports Student Organization (HPMSO)
Former Ferris State University Academic Senate Diversity Committee member
GM President's Council Honors
Ford Powertrain Customer Service Award
Ferris State University Registered Student Organization Advisor of the Year 2018-2019 for Baja SAE

PUBLICATIONS

Leonard, Russell A. Jr., "Females in Automotive Careers: Career Decision-Making Influences

and Experiences During University Preparation and Beyond" (2016). *Dissertations.* Paper 1608. http://scholarworks.wmich.edu/dissertations/1608

I have reviewed the Manual Drivetrains and Axles book by Halderman/Birch multiple times including the latest edition (7th) dated 2015, Prentice Hall, 978-0-13-351504-6.

PRESENTATIONS

"How to Make Biodiesel" for the Energy Summer Youth Camp on July 12-16, 2010. The students made biodiesel fuel out of waste vegetable oil from the University's dining facility, and then used it to fuel the test diesel engine.

Biodiesel Processing, Michigan Energy conference, April 7-8, 2009.

PROFESSIONAL ORGANIZATIONS

ASTM International (2014-present)

I am a voting member of ASTM International's Committee D02 on Petroleum Products, Liquid Fuels, and Lubricants and Committee D15 on Engine Coolants and Related Fluids. ASTM International is an international, not-for-profit organization, based in the USA, for the development, collection, standardization and dissemination of technical knowledge in a wide range of disciplines and is a voluntary, consensus standards organization.

In this capacity, I review; changes to current specifications, new specifications, and the deletion of obsolete specifications. The changes typically come out at multiple times each month. It requires, on average, 5 to 10 hours per month to review all the new changes and determine if there is benefit to the automotive industry. Each main committee in ASTM International is composed of subcommittees that address specific segments within the general subject area covered by the technical committee. Along with the general subject area of D02 and D15, I am a member of the following subcommittees:

D02.01	Combustion Characteristics
D02.06	Analysis of Liquid Fuels and Lubricants
D02.08	Volatility
D02.09	Oxidation of Lubricants

D02.14 Stability and Cleanliness of Liquid Fuels
D02.A0 Gasoline and Oxygenated Fuels
D02.B0 Automotive Lubricants
D02.E0 Burner, Diesel, Non-Aviation Gas Turbine, and Marine Fuels
D02.G0 Lubricating Grease
D02.L0 Industrial Lubricants and Engineering Sciences of High Performance Fluids and Solids
D02.N0 Hydraulic Fluids
D02.P0 Recycled Products
D15.03 Physical Properties
D15.04 Chemical Properties
D15.07 Specifications
D15.11 Heavy Duty Coolants
D15.15 Recycled Engine Coolant
D15.21 Long Life Engine Coolant
D15.21.01 TG on Glycerin/Glycol Blend Base Fluids
D15.22 Non-Aqueous Coolants
D15.25 Diesel Exhaust Fluid
D15.97 World Coolant Standards

ASTM Task Groups

WK51908 – Standard Test Method for Freezing Point of Aqueous Engine Coolants
WK58499 - Standard Specification for Fully-Formulated Glycol Base Engine Coolant for Heavy-Duty Engines
WK43678 – Standard Specification for Aqueous Engine Coolant Grade Glycol (53% Nominal)
WK59630 – Standard Specification for Engine Coolant Grade 1,3-Propanediol (PDO)
WK68375 - ASTM Reference Fluid for Carboxylate-Inhibited Coolant Tests

SAE **Member since 2011**

Fall 2015 – present **Faculty Advisor**, **Ferris State University SAE Baja student race team**
Consult with the team during regular meetings regarding vehicle design, oversee the purchase of parts and materials for the team and expense them through the university accounting process. Assist in the planning of the team's travel including three competitions per year with many competitions located out-of-state.

National Science Foundation (NSF) Grant Contact Credit

PETITIONER'S EXHIBIT 1002
US PATENT NO. 6,581,565
Page 7946

Semester
Hours Rate Hours

06/2010 Selected Topics in Energy Education: Biofuels Sem. Hrs.
1.0

Professional Development Grants

02/2009	Performance Development of IC Engines	18	CEU	1.8
09/2009	Fuels & the Future for IC Engines	18	CEU	1.8
05/2014	ASTM Gasoline Specs, Testing,& Technology	21	CEU	2.1
09/2014	ASTM Diesel Specs, Testing & Technology	21	CEU	2.1
09/2016	ASTM Petroleum Lab Technician Series: Biodiesel	18	CEU	1.8
06/2019	Center for Advanced Automotive Technology (CAAT) Electric Drive Vehicles Technology	16	CEU	1.6

Non-credit coursework:

10/2008	Toyota TIS2	8	0.5	
02/2009	Toyota Engine Management Systems Diagnosis	4		0.25
02/2009	Tech Expo: OBD II, Duramax Diesel, 5 gas	8		0.5
02/2010	Tech Expo: Alignment, Mitchel mgt., ABS	8		0.5
02/2011	Tech Expo: VW Drive By Wire & 6.7L Ford Diesel	8		0.5
03/2012	Powerstroke Diesel Fundamentals Seminar	4		0.25
08/2013	Automotive Networks and Fuel Trim issues	4		0.25
03/2019	National Alternative Fuels Training Consortium	32		2

Electric Drive Vehicle Technician Training

PTS On-Demand: Professional Technician's Seminars

12/22/2015	Diagnosing Catalytic Converter Efficiency Codes	1	PDH
12/22/2015	HVAC Update 2015	1	PDH
12/19/2015	Variable Valve Timing Tips &Tricks	1	PDH
12/23/2015	Guerilla Diagnostics	1	PDH
12/23/2015	ABS and Vehicle Stability Control	1	PDH
01/01/2016	No-scope Diagnosis	1	PDH
01/01/2016	Hybrid HV Battery Diagnosis	1	PDH
01/01/2016	Ford 6.0 Powerstroke Misfire Tips	1	PDH
01/01/2016	Sensor Diagnosis	1	PDH
01/01/2016	Hyundai/Kia Tips &Tricks	1	PDH
01/01/2016	Voltage Drop Testing	1	PDH
01/01/2016	Chrysler EVAP Tips &Tricks	1	PDH
01/01/2016	OE Scan Tool Update	1	PDH
01/01/2016	Brain Teasers: Diagnostic Puzzles	1	PDH
01/01/2016	More Duramax Diesel Tips &Tricks	1	PDH
01/01/2016	Diesel No-Start Diagnosis	1	PDH
01/01/2016	GM Idle Stop and Light Hybrid	1	PDH
01/01/2016	Electronic Transmission Controls Part II	1	PDH

01/01/2016 Chrysler/Jeep Tips &Tricks 1 PDH

01/01/2016 Understanding Wiring Schematics Part II 1 PDH

ASTM Petroleum Lab Technician Series: Biodiesel

05/30/2017 ASTM Standard D2622-16 Standard Test Method for 1 CEU
0.1
Sulfur in Petroleum Products

05/30/2017 ASTM Standard D1298-12b Standard Test Method for 1 CEU
0.1
Density, Relative Density or API Gravity of Crude Petroleum and Liquid Petroleum Products by Hydrometer Method

06/19/2017 ASTM Standard D1319-15 Standard Test Method for 1 CEU
0.1
Hydrocarbon Types in Liquid Petroleum Products by Fluorescent Indicator Adsorption

06/20/2017 ASTM Standard D4530-15 Standard Test Method for 1 CEU
0.1
Determination of Carbon Residue (Micro Method)

06/20/2017 ASTM Standard D445-15a Standard Test Method for 1 CEU
0.1
Kinematic Viscosity of Transparent and Opaque Liquids (and Calculation of Dynamic Viscosity)

06/20/2017 ASTM Standard D4294-16e1 Standard Test Method for 1 CEU
0.1
Sulfur in Petroleum and Petroleum Products by Energy Dispersive X-ray Fluorescence Spectrometry

06/21/2017 ASTM Standard D5453-16 Standard Test Method for 1 CEU
0.1
Total Sulfur in Light Hydrocarbons, Spark Ignition Engine Fuel,

Diesel Engine Fuel, and Engine Oil by Ultraviolet Fluorescence

06/21/2017 ASTM Standard D524-15 Standard Test Method for 1 CEU 0.1
Ramsbottom Carbon Residue of Petroleum Products

06/21/2017 ASTM Standard D482-13 Standard Test Method for 1 CEU 0.1
Ash from Petroleum Products

06/22/2017 ASTM Standard D97-17 Standard Test Method for 1 CEU 0.1
Pour Point of Petroleum Products

06/21/2017 ASTM Standard D93-15a Standard Test Method for 1 CEU 0.1
Flash Point by Pensky-Martens Closed Cup Tester

06/22/2017 ASTM Standard D86-16a Standard Test Method for 1 CEU 0.1
Distillation of Petroleum Products and Liquid Fuels at Atmospheric Pressure

06/22/2017 ASTM Standard D664-11a Standard Test Method for 1 CEU 0.1
Acid Number of Petroleum Products by Potentiometric Titration

06/25/2017 ASTM Standard D974-14e2 Standard Test Method for 1 CEU 0.1
Acid and Base Number by Color-Indicator Titration

06/25/2017 ASTM Standard D1319-14 Standard Test Method for 1 CEU 0.1
Hydrocarbon Types in Liquid Petroleum Products by Fluorescent Indicator Adsorption

06/25/2017 ASTM Standard D2622-10 Standard Test Method for 1 CEU 0.1

Sulfur in Petroleum Products by Wavelength Dispersive X-ray Fluorescence Spectrometry

06/25/2017 ASTM Standard D4294-10 Standard Test Method for Sulfur in Petroleum and Petroleum Products by Energy Dispersive X-ray Fluorescence Spectrometry 1 CEU 0.1

06/25/2017 ASTM Standard D5453-12 Standard Test Method for Total Sulfur in Light Hydrocarbons, Spark Ignition Engine Fuel, Diesel Engine Fuel, and Engine Oil by Ultraviolet Fluorescence 1 CEU 0.1

UNITED STATES PATENT AND TRADEMARK OFFICE

BEFORE THE PATENT TRIAL AND APPEAL BOARD

VOLKSWAGEN GROUP OF AMERICA, INC.,
Petitioner,

v.

MICHIGAN MOTOR TECHNOLOGIES LLC,
Patent Owner.

IPR2020-00444
Patent 6,581,565 B2

Before NEIL T. POWELL, SCOTT B. HOWARD, and
SEAN P. O'HANLON, *Administrative Patent Judges*.

POWELL, *Administrative Patent Judge*.

ORDER
Conduct of Proceeding
Authorizing Reply and Sur-reply to Patent Owner Preliminary Response
37 C.F.R. § 42.5

Volkswagen Group of America, Inc. ("Petitioner") requests authorization to file a reply to the Preliminary Response of Michigan Motor Technologies LLC ("Patent Owner"). Petitioner also proposes that we authorize Patent Owner to file a sur-reply to Petitioner's reply. Petitioner represents that Patent Owner opposes the request.

In order to resolve the issues presented regarding whether to institute *inter partes* review, we agree that additional briefing from both parties may prove helpful. Therefore, we grant Petitioner's request as provided below. Our authorization is limited to the filing of a reply brief and a sur-reply brief. No additional documents, including supplemental declarations or other exhibits, are authorized to be filed with the authorized briefing.

In consideration of the foregoing, it is hereby:

ORDERED that Petitioner is authorized to file a reply to the Patent Owner Preliminary Response, not to exceed eight (8) pages, on or before June 1, 2020; and

FURTHER ORDERED that Patent Owner is authorized to file a sur-reply to Petitioner's reply to Patent Owner's Preliminary Response, not to exceed eight (8) pages, on or before June 8, 2020.

PETITIONER:

Michael D. Specht
Jason A. Fitzsimmons
Daniel E. Yonan
Kyle E. Conklin
John Higgins
STERNE, KESSLER, GOLDSTEIN & FOX P.L.L.C.
mspecht-ptab@sternekessler.com
jfitzsimmons-ptab@sternekessler.com
dyonan-ptab@sternekessler.com
kconklin-ptab@sternekessler.com
jhiggins-ptab@sternekessler.com

PATENT OWNER:

Robyn T. Williams
Timothy Devlin
DEVLIN LAW FIRM LLC
tdevlin@devlinlawfirm.com
rwilliams@devlinlawfirm.com

UNITED STATES PATENT AND TRADEMARK OFFICE

BEFORE THE PATENT TRIAL AND APPEAL BOARD

VOLKSWAGEN GROUP OF AMERICA, INC.,
Petitioner,

v.

MICHIGAN MOTOR TECHNOLOGIES LLC,
Patent Owner.

IPR2020-00445
Patent 6,581,565 B2

Before NEIL T. POWELL, BARBARA A. PARVIS, and
SEAN P. O'HANLON, *Administrative Patent Judges*.

POWELL, *Administrative Patent Judge*.

ORDER
Conduct of Proceeding
Authorizing Reply and Sur-reply to Patent Owner Preliminary Response
37 C.F.R. § 42.5

Volkswagen Group of America, Inc. ("Petitioner") requests authorization to file a reply to the Preliminary Response of Michigan Motor Technologies LLC ("Patent Owner"). Petitioner also proposes that we authorize Patent Owner to file a sur-reply to Petitioner's reply. Petitioner represents that Patent Owner opposes the request.

In order to resolve the issues presented regarding whether to institute *inter partes* review, we agree that additional briefing from both parties may prove helpful. Therefore, we grant Petitioner's request as provided below. Our authorization is limited to the filing of a reply brief and a sur-reply brief. No additional documents, including supplemental declarations or other exhibits, are authorized to be filed with the authorized briefing.

In consideration of the foregoing, it is hereby:

ORDERED that Petitioner is authorized to file a reply to the Patent Owner Preliminary Response, not to exceed eight (8) pages, on or before June 1, 2020; and

FURTHER ORDERED that Patent Owner is authorized to file a sur-reply to Petitioner's reply to Patent Owner's Preliminary Response, not to exceed eight (8) pages, on or before June 8, 2020.

PETITIONER:

Michael D. Specht
Jason A. Fitzsimmons
Daniel E. Yonan
Kyle E. Conklin
John Higgins
STERNE, KESSLER, GOLDSTEIN & FOX P.L.L.C.
mspecht-ptab@sternekessler.com
jfitzsimmons-ptab@sternekessler.com
dyonan-ptab@sternekessler.com
kconklin-ptab@sternekessler.com
jhiggins-ptab@sternekessler.com

PATENT OWNER:

Robyn T. Williams
Timothy Devlin
DEVLIN LAW FIRM LLC
tdevlin@devlinlawfirm.com
rwilliams@devlinlawfirm.com

UNITED STATES PATENT AND TRADEMARK OFFICE

BEFORE THE PATENT TRIAL AND APPEAL BOARD

VOLKSWAGEN GROUP OF AMERICA, INC.,
Petitioner

v.

MICHIGAN MOTOR TECHNOLOGIES LLC,
Patent Owner

Case IPR2020-00444
Patent 6,581,565

PETITIONER'S REPLY TO PATENT OWNER'S PRELIMINARY RESPONSE

Mail Stop "PATENT BOARD"
Patent Trial and Appeal Board
U.S. Patent and Trademark Office
P.O. Box 1450
Alexandria, VA 22313-1450

Patent Owner's Preliminary Response (POPR) alleges deficiencies in the Petition that are all premised on factual and legal errors. First, Patent Owner (PO) falsely implies that every challenged claim includes direct injection spark ignition (DISI) engine limitations. Second, PO individually attacks the prior art and ignores the prior-art combinations. Third, PO's teaching-away argument is legally and technically unfounded. Finally, PO's §325(d) argument is conclusory and wrong.

I. Independent claims 1 and 7 do not require a DISI engine that operates in a stratified charge mode.

PO falsely implies that every challenged claim of the '565 patent requires a DISI engine that operates in a stratified charge mode. POPR, 19 ("there is no consideration of a stratified charge operation mode for a DISI engine as…*the challenged claims of the '565 patent require*"[1]), 22 ("*Scherer*[2] does not consider a stratified charge operation mode for a DISI engine as the '565 patent teaches *and claims*"). But each independent claim merely recites "an engine" without specifying any operational mode. EX1001, claims 1, 7. DISI limitations only appear in dependent claim 4, and as the Petition explains, the primary Suzuki reference[3] discloses these dual-mode DISI engine features. Pet., 61–63. Moreover,

[1] Emphasis added unless otherwise noted.

[2] Emphasis in original.

[3] PO's arguments are also based on the inaccurate representation that the primary

PO admits these features were "well known in the prior art." POPR, 14–15.

II. Patent Owner resorts to individually attacking Scherer, ignoring Suzuki's teachings.

The Petition explained why the combination of Suzuki, Cullen, and Scherer renders obvious independent claims 1 and 7 and dependent claim 4. Pet., 24–69. Instead of alleging why the *combination* does not render obvious the challenged claims, PO attacks the references individually and ignores the other references. Particularly, PO argues that Scherer fails to disclose (1) a DISI engine that operates in stratified mode, and (2) filtering, using a high-pass filter, a *difference* signal. POPR, 19–20, 23. PO also individually attacks Cullen for allegedly not disclosing torque control during a combustion engine's stratified mode. *Id.*, 18–19. PO ignores that the primary Suzuki reference discloses these features.

Regarding the first feature, as explained above, independent claims 1 and 7 do not require a DISI engine that operates in stratified mode. By focusing on this non-existent dual-mode DISI engine limitation, PO attempts to distract the Board from the Petition's merits. *Id.*, 18–20, 23. Regardless, Suzuki discloses a DISI engine that operates in both homogeneous and stratified modes. Pet., 61–63 (citing EX1003, ¶¶140–141; EX1005, 3:6–10, 7:45–8:4, FIGS. 1B, 6). PO even admits

reference is Scherer. POPR, 1 ("Petitioner relies upon *Scherer* as the primary reference"), 2. But Suzuki is the primary reference. *See, e.g.*, Pet., 5, 25.

that Suzuki discloses these DISI-engine limitations. *See* POPR, 2, 14. Accordingly, the Suzuki-Cullen-Scherer combination discloses these allegedly missing DISI-engine limitations, which the independent claims do not even require.

The combination of Suzuki and Scherer also discloses the second feature—filtering a *difference* signal using a high pass filter. As the Petition explains, *Suzuki* discloses a comparator that *outputs a difference signal*. Pet., 48–50 (citing EX1003, ¶¶121–123; EX1005, 7:35–39, FIG. 6). PO does not dispute this. In addition to Suzuki's implicit disclosure of a high-pass filter,[4] Scherer discloses high-pass filtering a torque signal. Pet., 50–53 (citing EX1003, ¶¶94, 124–127; EX1005, 7:51–63, 8:1–4, 8:51–60, FIGS. 12–15). PO does not dispute and even admits that Scherer discloses a high-pass filter that filters a desired torque signal and generates a filtered torque signal. POPR, 20. PO, however, asserts that Scherer does not disclose high-pass filtering a *difference* signal. POPR, 19, 20. But as the

[4] Suzuki implicitly discloses high-pass filtering the difference signal. Pet., 50–53; EX1003, ¶¶94, 124–127; EX1005, 7:51–63, 8:1–4, 8:51–60, FIGS. 12–15. PO describes Suzuki's Figures 12–15 and concludes the figures do not disclose high-pass filtering. But PO never addresses the correction factor signals in the figures, which indicate high-pass filtering. *See* POPR, 16–18. Thus, PO fails to rebut the technical bases that show Suzuki implicitly discloses high-pass filtering.

Petition explains, Suzuki discloses a comparator that outputs a difference signal, and the *combination* of Suzuki and Scherer discloses a *high-pass filter* that receives as an input a *difference* signal. Pet., 33–38, 50–57.

Ignoring the Suzuki-Scherer-Cullen *combination* and instead individually attacking Scherer is legally erroneous. "Non-obviousness cannot be established by attacking references individually where the rejection is based upon the teachings of a combination of references." *In re Merck & Co., Inc.*, 800 F.2d 1091, 1097 (Fed. Cir. 1986).

III. Patent Owner's teaching-away argument is misguided.

PO asserts that Scherer teaches away from being combined with Suzuki because Scherer (1) does not disclose a DISI engine that operates in stratified mode, and (2) discloses diesel engine control. POPR, 19, 22. PO's assertion ignores well-settled case law and is substantively unsupported.

To teach away, a prior art reference must "criticize, discredit, or otherwise discourage the solution claimed." *In re Fulton*, 391 F.3d 1195, 1201 (Fed. Cir. 2004). The mere disclosure of alternative designs does not teach away. *Id.* PO's assertion that Scherer teaches away from being combined with Suzuki runs afoul of this jurisprudence. The alleged differences between Scherer and Suzuki—Scherer not disclosing a DISI engine that operates in stratified mode while also disclosing diesel engine control—are not a teaching away. And PO fails to identify

any disclosure in Scherer that criticizes, discredits, or otherwise discourages combining Scherer's filtering disclosure with Suzuki's DISI-engine control. *See* POPR, 19, 20, 22; EX2001, ¶¶42, 49, 54. Further, PO's focus on Scherer's diesel-engine in the Figure 2 embodiment is misguided. *See* POPR, 19, 20. As PO recognizes, POPR, 19 ("an Otto (gasoline) engine"), Scherer *also* discloses high-pass filtering with an internal combustion engine, just like the '565 patent and Suzuki. EX1007, Abstract, 3:30–33, 3:53–5:15.

PO's teaching-away argument is premised solely on the fact that there are alleged differences between the references. But this does not mean they teach away. Neither PO nor its declarant provides any technical analysis why the alleged differences between Suzuki and Scherer negate the identified rationales to combine Suzuki and Scherer. *See* POPR, 19, 20, 22; EX2001, ¶¶42, 49, 54. The rationales were not because they disclose identical engines—either DISI engines or diesel engines. *See* Pet., 36–39, 55–57 (citing EX1003, ¶¶98–103, 131–134). Rather, as Petitioner's expert, Dr. MacCarley explained, both references disclose adjusting ignition timing and fuel injection to control torque, and a POSA would have been motivated to use Scherer's high-pass filtering to improve Suzuki's similar ignition timing and fuel injection adjustments. EX1003, ¶¶98–103, 131–134; Pet., 36–39, 55–57. For example, as Dr. MacCarley explains, a POSA would have been motivated to combine Scherer's high-pass filtering with Suzuki's controller "[t]o

further improve the response of Suzuki's controller to dynamic changes in demanded torque" by "adjusting the torque output with a quicker response time." EX1003, ¶98; Pet., 33–39 (citing EX1003, ¶¶94–103). The mere fact that Scherer does not expressly disclose a dual-mode DISI engine or does disclose a diesel engine fails to negate (and is irrelevant to) the articulated motivation to improve Suzuki's controller by allowing the output torque to be rapidly adjusted during transient conditions. PO's unsupported attorney argument about the alleged differences between Suzuki and Scherer fail to rebut these motivations.

IV. Section 325(d) does not provide a reason to deny institution.

The Petition addressed the *Becton* factors. Pet., 24-28. After filing the Petition and before the POPR, the Board designated precedential *Advanced Bionics, LLC v. MED-EL Elektromedizinische Geräte GmbH*, IPR2019-01469, Paper 6 (P.T.A.B. Feb. 13, 2020). In *Advanced Bionics*, the Board set forth a two-part framework for deciding whether to exercise discretion under § 325(d): (1) whether the same or substantially the same art was previously presented to the Office or whether the same or substantially the same arguments were previously presented to the Office; and (2) if the first part is satisfied, whether the petitioner has demonstrated that the Office erred in a manner material to the patentability of challenged claims. *Id.* at 8–9. Here, the Board should not deny institution under §325(d). Neither Suzuki nor Cullen were previously before the Office. And

Scherer was only cited in an IDS, not applied. *Pure Storage, Inc. v. Realtime Data LLC*, Case No. IPR2018-00549, Paper 7, 11 (P.T.A.B. July 23, 2018) (instituting trial when the applied references were cited in an IDS but not applied). Thus, substantially the same prior art or arguments were not previously before the Office. As the Petition shows, it was material error for the Office not to consider the Suzuki-Cullen-Scherer combination, which renders the claims obvious.

Addressing neither the *Advanced Bionics* framework nor the *Becton* factors, PO argues Suzuki is cumulative with admitted prior art (APA) and that Scherer was of record, and thus, the Board should exercise its discretion under § 325(d). POPR, 14–15, 20.

To start, PO argues that admitting that claimed features were known in the prior art prevents references disclosing those known features from being applied in *inter partes* reviews. This simply cannot be true; otherwise, a patent owner could insulate itself from *inter partes* review simply by making statements about the prior art in the written description.

Regardless, *Advanced Bionics* does not support PO's position. Suzuki and Cullen were never before the Office. And even assuming that the Office considered the APA, the APA is not substantially the same as Suzuki. In addition to admitted prior art features, Suzuki discloses (1) a torque controller, Pet., 41–43; (2) a torque producer, *id.*, 43–44; (3) a torque estimator, *id.*, 44–45; (4) a comparator, *id.*, 48–

50; (5) a high-pass filter, *id.*, 50–57; and (6) a transient torque controller, *id.*, 57–61. The Office never considered that a single prior art reference included these additional features. Failing to consider Suzuki was material error as the ’565 patent claims are obvious in view of Suzuki, Cullen, and Scherer.

Turning to Scherer, there is no evidence that the Office substantively considered Scherer’s specific, highly-relevant disclosure of high-pass filtering. Although Scherer was cited in an IDS, the ’565 patent was allowed without a single Office Action, and the Notice of Allowance did not provide any reasons why the ’565 patent was allowed over the prior art. EX1002, 0045–0052. Because no references were applied or expressly considered, the Office did not substantively consider Scherer, any similar reference, or any arguments to overcome Scherer. Thus, the first part of the *Advanced Bionics* framework is not satisfied. While unnecessary, under the framework’s second part, Scherer includes highly relevant high-pass filtering disclosure. Pet., 50–57. Failing to consider Scherer, especially in view of Suzuki’s teachings that were never considered by the Office, was material error as the combination of Suzuki and Scherer (and Cullen) discloses or renders obvious every claim feature.

V. Conclusion

Accordingly, the Board should reject PO’s erroneous arguments, institute *inter partes* review, and ultimately find the challenged claims unpatentable.

Respectfully submitted,

STERNE, KESSLER, GOLDSTEIN & FOX P.L.L.C.

/Michael D. Specht/

Michael D. Specht (Reg. No. 54,463)
Attorney for Petitioner
Volkswagen Group of America, Inc.

Date: June 1, 2020

1100 New York Avenue, N.W.
Washington, D.C. 20005-3934
(202) 371-2600

CERTIFICATION OF SERVICE (37 C.F.R. § 42.6(e))

The undersigned hereby certifies that on June 1, 2020, a true and correct copy of the foregoing **PETITIONER'S REPLY TO PATENT OWNER'S PRELIMINARY RESPONSE** was served electronically via e-mail in its entirety on the following counsel for Patent Owner:

Timothy Devlin (Lead Counsel)
Robyn T. Williams (Back-up Counsel)
DEVLIN LAW FIRM LLC
TD-PTAB@devlinlawfirm.com
tdevlin@devlinlawfirm.com
rwilliams@devlinlawfirm.com
mmcclain@devlinlawfirm.com
fxu@devlinlawfirm.com

STERNE, KESSLER, GOLDSTEIN & FOX P.L.L.C.

/Michael D. Specht/

Michael D. Specht (Reg. No. 54,463)
Attorney for Petitioner
Volkswagen Group of America, Inc.

Date: June 1, 2020

1100 New York Avenue, N.W.
Washington, D.C. 20005-3934
(202) 371-2600

15067545_

UNITED STATES PATENT AND TRADEMARK OFFICE

BEFORE THE PATENT TRIAL AND APPEAL BOARD

VOLKSWAGEN GROUP OF AMERICA, INC.,
Petitioner

v.

MICHIGAN MOTOR TECHNOLOGIES LLC,
Patent Owner

Case IPR2020-00445
Patent 6,581,565

PETITIONER'S REPLY TO PATENT OWNER'S PRELIMINARY RESPONSE

Mail Stop "PATENT BOARD"
Patent Trial and Appeal Board
U.S. Patent and Trademark Office
P.O. Box 1450
Alexandria, VA 22313-1450

Patent Owner's Preliminary Response (POPR) alleges deficiencies in the Petition that are all premised on factual and legal errors. First, Patent Owner (PO) falsely implies that every challenged claim includes direct injection spark ignition (DISI) engine limitations. Second, PO individually attacks the prior art and ignores the prior-art combinations. Third, PO's teaching-away argument is legally and technically unfounded. Fourth, PO's motivation to combine argument is legally flawed. And fifth, PO's §325(d) argument is conclusory and wrong.

I. Independent claims 1 and 7 do not require a DISI engine that operates in a stratified charge mode.

PO falsely implies that every challenged claim of the '565 patent requires a DISI engine that operates in a stratified charge mode. POPR, 4 ("a stratified charge operation mode for a DISI engine as the '565 patent discloses *and claims*[1]"), 10 ("[t]he basic inventive concept…*claimed* in the subject '565 patent is, in the context of controlling the engine torque of a spark ignition direct injection internal combustion engine"), 16 ("a stratified charge operation mode for a DISI engine as…*the challenged claims of the '565 patent require*"). But each independent claim merely recites "an engine" without specifying any operational mode. EX1001, claim 1, claim 7. DISI limitations only appear in dependent claim 4, and as the Petition explains, Suzuki discloses these dual-mode DISI engine features.

[1] Emphasis added unless otherwise noted.

Pet., 75–89. Moreover, PO admits these dual-mode DISI engine features were "well known in the prior art." POPR, 11, 18–19.

II. Patent Owner resorts to individually attacking each of Robichaux and Scherer, ignoring the other's teachings and their combination.

The Petition explained why the *combination* of Robichaux and Scherer renders obvious the independent claims 1 and 7. Pet., 26–57. Instead of alleging why the Robichaux-Scherer *combination* does not render obvious the challenged claims, PO attacks the references individually and ignores the other's teachings. Particularly, PO argues that Robichaux does not disclose the recited high-pass filter. POPR, 15. PO then turns to Scherer and argues that Scherer does not teach using the high-pass filter to filter a *difference* signal. POPR, 15–16, 25.

But PO ignores that the allegedly missing feature in each reference is disclosed in the other reference. Scherer discloses a high-pass filter. Pet., 47–49 (citing EX1003, ¶¶88–90, 110; EX1007, 4:20–28, 4:31–40, 5:35–55, FIGS. 1, 2). PO admits this. POPR, 4 ("Scherer discloses a high pass filter"), 5 ("Scherer uses a high pass filter"), 16 ("even though there is a high-pass filter disclosed [in Scherer]" and "*Scherer* uses the high-pass filter"). Robichaux discloses a comparator that outputs a difference signal. Pet., 45–46 (citing EX1003, ¶¶105–107; EX1020, ¶¶0029–0030, FIG. 3). PO also admits that Robichaux discloses generating a difference signal. POPR, 15 ("*Robichaux* discloses a conventional (admitted prior art) system that produces a 'difference signal'"). And the Petition

explains that a POSA would have been motivated to use Scherer's high-pass filter to filter the difference signal generated by Robichaux's comparator. Pet., 30–36 (citing EX1003, ¶¶81–92; EX1007, 1:7–11, 2:51-59; 4:20–52, 4:60-67; 5:10–55, FIGS. 1, 2; EX1019, 138; EX1020 ¶¶0001, 0016–0018, 0023, 0025, 0027, 0032–0033, 0048, FIGS. 2, 3). Thus, the Robichaux-Scherer combination discloses filtering a difference signal using a high pass filter as recited in claims 1 and 7.

Accordingly, PO's assertion that even combining Robichaux and Scherer does not result in high-pass filtering a difference signal is false. *See* POPR, 3 ("neither reference discloses critical limitations of the challenged claims"), 26 ("[c]ombining these two prior art references…would result in a 'difference signal' which is not high-pass filtered"). These false assertions are also unsupported. The cited declaration portions are directed to motivation to combine, not whether the Robichaux-Scherer combination discloses high-pass filtering a difference signal. *See* POPR, 26 (citing EX2001, ¶¶47–55). In fact, PO's declarant never opines that these features are missing when these references are combined. *See generally* EX2001. Ignoring the Robichaux-Scherer *combination* and instead individually attacking each reference is legally erroneous. "Non-obviousness cannot be established by attacking references individually where the rejection is based upon the teachings of a combination of references." *In re Merck & Co., Inc.*, 800 F.2d 1091, 1097 (Fed. Cir. 1986).

III. Patent Owner's teaching-away argument is misguided.

PO asserts that Scherer teaches away from being combined with Robichaux because Scherer (1) does not disclose a DISI engine that operates in stratified mode, and (2) discloses diesel engine control. POPR, 16. PO's assertion ignores well-settled case law and is substantively unsupported.

To teach away, a prior art reference must "criticize, discredit, or otherwise discourage the solution claimed." *In re Fulton*, 391 F.3d 1195, 1201 (Fed. Cir. 2004). The mere disclosure of alternative designs does not teach away. *Id.* PO's assertion that Scherer teaches away from being combined with Robichaux runs afoul of this jurisprudence. The alleged differences between Scherer and Robichaux—Scherer not disclosing a DISI engine that operates in stratified mode while also disclosing diesel engine control—are not a teaching away. And PO fails to identify any disclosure in Scherer that criticizes, discredits, or otherwise discourages combining Scherer's high-pass filtering with Robichaux's engine control. *See* POPR, 16–17. Further, PO's focus on Scherer's diesel-engine in the Figure 2 embodiment is misguided. *See id.*, 16. As PO recognizes, *id.*, 3 ("Otto engine"), 15 ("Otto (gasoline) engine"), Scherer *also* discloses high-pass filtering with an internal combustion engine, just like engine disclosed in the '565 patent and Robichaux. EX1007, Abstract, 3:30–33, 3:53–5:15.

PO's teaching-away argument is premised solely on the fact that there are

alleged differences between the references. But this does not mean they teach away. Neither PO nor its declarant provides any technical analysis why the alleged differences between Robichaux and Scherer negate the identified rationales to combine Robichaux and Scherer. *See* POPR, 16; EX2001, ¶¶47–55. The rationales were not because they disclose identical engines—either DISI engines or diesel engines. *See* Pet., 30–36 (citing EX1003, ¶¶81–92). Rather, as Petitioner's expert, Dr. MacCarley explained, both references disclose engine torque control, and a POSA would have been motivated to use Scherer's high-pass filtering to improve Robichaux's torque control. EX1003, ¶¶81–92; Pet., 30–36. For example, Dr. MacCarley explains a "POSA would have been motivated to incorporate Scherer's transient torque control…into Robichaux's controller *to enable torque control during transient conditions*." EX1003, ¶92 (emphasis added); Pet., 30–36, 49–50 (citing EX1003, ¶¶81–92, 112–113). Whether Scherer expressly discloses a dual-mode DISI engine or does disclose a diesel engine fails to negate (and is irrelevant to) the articulated motivation to expand Robichaux's control functionality during transient conditions. PO's unsupported attorney argument about alleged differences between Robichaux and Scherer fails to rebut these motivations.

IV. Patent Owner's rigid application of the teaching, suggestion, or motivation (TSM) test was rejected by the Supreme Court.

PO argues that the motivation to combine Robichaux and Scherer is deficient because they allegedly do not disclose an express motivation to combine:

"Petitioner's analysis is misguided since a proper prior art analysis would explain where the references themselves provide the teaching, motivation or suggestion to combine their teachings." POPR, 22. But it is long-settled that the Supreme Court expressly rejected rigid application of the TSM test. *KSR Int'l Co. v. Teleflex Inc.*, 550 U.S. 398, 418 (2007). Regardless, Scherer contains an express motivation to combine its high-pass filter with Robichaux's engine control—quick and precise control of torque during transient conditions. Pet., 33–34, 53–54 (citing EX1007, 2:38–42, 4:20-25, 4:40–45, 5:10–15; EX1003, ¶¶88, 90, 92, 112, 119). This express motivation demonstrates that the motivation is not hindsight.

V. Section 325(d) does not provide a reason to deny institution.

The Petition addressed the *Becton* factors. Pet., 26-29. After filing the Petition and before the POPR, the Board designated precedential *Advanced Bionics, LLC v. MED-EL Elektromedizinische Geräte GmbH*, IPR2019-01469, Paper 6 (P.T.A.B. Feb. 13, 2020). In *Advanced Bionics*, the Board set forth a two-part framework for deciding whether to exercise discretion under §325(d): (1) whether the same or substantially the same art previously was presented to the Office or whether the same or substantially the same arguments previously were presented to the Office; and (2) if the first part is satisfied, whether the petitioner has demonstrated that the Office erred in a manner material to the patentability of challenged claims. *Id.*, 8-9. Here, the Board should not deny institution under

§325(d). Robichaux was not previously before the Office. And Scherer was only cited in an IDS, not applied. *Pure Storage, Inc. v. Realtime Data LLC*, Case No. IPR2018-00549, Paper 7 at 11 (P.T.A.B. July 23, 2018) (instituting trial when the applied references were cited in an IDS but not applied). Thus, substantially the same prior art or arguments were <u>not</u> previously before the Office. Regardless, the Petition shows it was material error for the Office not to consider the Robichaux-Scherer combination, which renders the claims obvious.

Addressing neither the *Advanced Bionics* framework nor the *Becton* factors, PO argues Robichaux is cumulative with admitted prior art (APA) and that Scherer was of record, and thus, the Board should exercise its discretion under §325(d). POPR, 5, 15, 17.

To start, PO argues that admitting that claimed features were known in the prior art prevents references disclosing those known features from being applied in *inter partes* reviews. This simply cannot be true; otherwise, a patent owner could insulate itself from *inter partes* review simply by making statements about the prior art in the written description. Regardless, the *Advanced Bionics* framework does not support PO's position. Robichaux was never before the Office. And even assuming that the Office considered the applicant's APA, the APA is not substantially the same as Robichaux. In addition to APA features, Robichaux discloses (1) a torque controller, Pet., 40–42; (2) a torque producer including an

estimator, *id.*, 43–45; (3) a comparator, *id.*, 45–46; and (4) a transient torque controller, *id.*, 51–54. The Office never considered that a single prior art reference included these additional features. And failing to consider Robichaux was material error as the ’565 patent claims are obvious in view of Robichaux and Scherer.

There is also no evidence that the Office substantively considered Scherer’s specific, highly-relevant disclosure of high-pass filtering. Although Scherer was cited in an IDS, the ’565 patent was allowed without an Office Action, and the Notice of Allowance did not provide any reasons for allowance over the prior art. EX1002, 0045–0052. Because no references were applied or expressly considered, the Office did not substantively consider Scherer, any similar reference, or any arguments to overcome Scherer. Thus, the first part of the *Advanced Bionics* framework is not satisfied. While unnecessary, under the framework’s second part, Scherer includes highly relevant high-pass filtering disclosure. Pet., 50–57. Failing to consider Scherer, especially in view of Robichaux’s teachings that were never considered by the Office, was material error as the combination of Robichaux and Scherer discloses or renders obvious every claim feature.

VI. Conclusion

Accordingly, the Board should reject PO’s technically and legally unfounded arguments, institute *inter partes* review, and ultimately find the challenged claims unpatentable.

Respectfully submitted,

STERNE, KESSLER, GOLDSTEIN & FOX P.L.L.C.

/Michael D. Specht/

Michael D. Specht (Reg. No. 54,463)
Attorney for Petitioner
Volkswagen Group of America, Inc.

Date: June 1, 2020

1100 New York Avenue, N.W.
Washington, D.C. 20005-3934
(202) 371-2600

CERTIFICATION OF SERVICE (37 C.F.R. § 42.6(e))

The undersigned hereby certifies that on June 1, 2020, a true and correct copy of the foregoing **PETITIONER'S REPLY TO PATENT OWNER'S PRELIMINARY RESPONSE** was served electronically via e-mail in its entirety on the following counsel for Patent Owner:

Timothy Devlin (Lead Counsel)
Robyn T. Williams (Back-up Counsel)
DEVLIN LAW FIRM LLC
TD-PTAB@devlinlawfirm.com
tdevlin@devlinlawfirm.com
rwilliams@devlinlawfirm.com
mmcclain@devlinlawfirm.com
fxu@devlinlawfirm.com

STERNE, KESSLER, GOLDSTEIN & FOX P.L.L.C.

/Michael D. Specht/

Michael D. Specht (Reg. No. 54,463)
Attorney for Petitioner
Volkswagen Group of America, Inc.

Date: June 1, 2020

1100 New York Avenue, N.W.
Washington, D.C. 20005-3934
(202) 371-2600

15016540_

UNITED STATES PATENT AND TRADEMARK OFFICE

BEFORE THE PATENT TRIAL AND APPEAL BOARD

Volkswagen Group of America, Inc.,
Petitioner

v.

Michigan Motor Technologies LLC,
Patent Owner

Case IPR2020-00444
Patent No. 6,581,565

PATENT OWNER'S SUR-REPLY TO PETITIONER'S REPLY

Mail Stop PATENT BOARD
Patent Trial and Appeal Board
U.S. Patent and Trademark Office
P.O. Box 1450
Alexandria, VA 22313-1450
Submitted Electronically via PTAB E2E

Whether or not to grant the Petition for *inter partes* review in this matter can be decided by the Board on the basis of a single, straightforward issue, namely, the issue of whether it is reasonable that a POSA would have combined the references relied upon by Petitioner in such a manner as to arrive at a device/method for controlling a torque output of an engine that includes "a high pass filter which receives as an input the difference signal and outputs a filtered difference signal in which low frequency components are absent" (Exhibit 1001 at Claim 1) or "filtering out a plurality of low frequency components from the difference signal." (Ex. 1001 at Claim 7.)

Petitioner has already admitted that "Suzuki does not expressly disclose using a high-pass filter to receive the torque difference signal as an input and to output a filtered difference signal in which low frequency components are removed." (Paper 2 at 33.) However, Petitioner asserts that "Suzuki implicitly discloses high-pass filtering the difference signal." (Paper 9 at 3.) Petitioner asserts that although "PO describes Suzuki's Figures 12-15 and concludes the figures do not disclose high-pass filtering," Petitioner contends that "PO never addresses the correction factor signals in the figures, which indicate high-pass filtering." (*Id*. at 3.) In addition to the fact that Petitioner's contention is unsupported attorney argument, it is factually incorrect.

Patent Owner presented a Declaration of its Expert, Dr. Leonard (Exhibit

2001), which explained why *Suzuki*'s Figures 12-15 do not imply the use of a high-pass filter. Further, *Suzuki* certainly does not provide any written description regarding Figures 12-15 (or otherwise describe) high-pass filtering the "difference signal," and, as such, it is highly unreasonable to conclude that a POSA would have been taught by Suzuki to high-pass filter the "difference signal," much less that Suzuki provided an articulated reasoning as to why doing such a thing would be advantageous.

Petitioner's primary argument is that "PO does not dispute and even admits that Scherer discloses a high-pass filter that filters a desired torque signal and generates a filtered torque signal," and that "Suzuki discloses a comparator that outputs a difference signal, and the *combination* of Suzuki and Scherer discloses a *high-pass filter* that receives as an input a *difference* signal." (Paper 9 at 3-4) (emphases in original). But Petitioner's position is fatally flawed for at least the following reasons.

Scherer discloses high-pass filtering "a desired torque signal," and does not disclose high-pass filtering a "difference signal." *Suzuki* discloses a comparator that outputs a "difference signal." Neither *Scherer* nor *Suzuki* (or any other reference relied upon by Petitioner) discloses high-pass filtering a "difference signal." Rather, *Scherer* discloses high-pass filtering "a desired torque signal" which is defined in the challenged claims of the '565 patent as an input to the comparator that outputs a

"difference signal." Assuming a POSA would consider combining the teachings of both *Suzuki* and *Scherer*, the POSA would have been taught to "high-pass filter" an input to a comparator that outputs a "difference signal," rather than filtering the "difference signal." The only possible motivation for combining these two references in such a manner as to "high-pass filter" the "difference signal" is the disclosure of the '565 patent, using the challenged claims as a blueprint or roadmap. This clearly constitutes impermissible hindsight.

In this connection, "high pass filters" have been known in the art for decades. High-pass filtering of one or more inputs to a comparator that outputs a "difference signal" was well-known in the art at the time the '565 invention was made. The inventors of the prior art references certainly knew about "high pass filters" and about comparators that output a "difference signal." But unlike the inventors of the '565 patent, the prior art inventors did not teach or claim using the "high pass filter" to filter the output of the comparator (i.e., the "difference signal").

The '565 patent states " . . . there is a need for a method of correction of a steady state error between the torque demanded and an estimate of the torque produced." (Ex. 1001 at 1:57-59). The way in which the '565 patent accomplishes this objective is by employing a "a high pass filter which receives as an input the difference signal and outputs a filtered difference signal in which low frequency components are absent" (*Id*. at Claim 1) or "filtering out a plurality of low frequency

components from the difference signal" (*Id*. at Claim 7.) The prior art references that Petitioner relies upon, to include *Scherer* and *Suzuki*, did not even identify the problem that the challenged claims of the '565 patent solves, much less teach a solution therefor. No matter how much spin and hindsight analysis that Petitioner can muster, the inescapable conclusion is that the prior art references relied upon by Petitioner, either individually or in combination, do not render obvious any of the challenged claims of the '565 patent.

The Board should reject Petitioner's erroneous arguments and decide to not institute *inter partes* review.

June 8, 2020

Respectfully submitted,

/s/ *Timothy Devlin*

Timothy Devlin
Registration No. 41706
DEVLIN LAW FIRM LLC
1526 Gilpin Avenue
Wilmington, DE 19806
(302)-449-9010
tdevlin@devlinlawfirm.com
TD-PTAB@devlinlawfirm.com
Attorney for Patent Owner

CERTIFICATE OF SERVICE

I hereby certify that on June 8, 2020, I caused a true and correct copy of the foregoing materials to be served via the Patent Office electronic filing system, and electronic service via email to the following attorneys of record pursuant to Petitioner's consent.

LEAD COUNSEL	**BACKUP COUNSEL**
Michael D. Specht mspecht-PTAB@sternekessler.com STERNE, KESSLER, GOLDSTEIN & FOX P.L.L.C. 1100 New York Avenue, N.W. Washington, DC 20005 (202) 371-2600	Jason A. Fitzsimmons, Reg. No. 65,367 jfitzsimmons-PTAB@sternekessler.com Danny E. Yonan, Reg. No. 53,812 dyonan-PTAB@sternekessler.com Kyle Conklin, Reg. No. 59,425 dyonan-PTAB@sternekessler.com John D. Higgins, Reg. No. 74,992 jhiggins-PTAB@sternekessler.com STERNE, KESSLER, GOLDSTEIN & FOX P.L.L.C. 1100 New York Avenue, N.W. Washington, D.C. 20005 Tel.: 202-371-2600 Fax: 202-371-2540

Respectfully submitted,

/s/ *Timothy Devlin*
Timothy Devlin
Registration No. 41706
DEVLIN LAW FIRM LLC
1526 Gilpin Avenue
Wilmington, DE 19806
(302)-449-9010
tdevlin@devlinlawfirm.com
TD-PTAB@devlinlawfirm.com
Attorney for Patent Owner

UNITED STATES PATENT AND TRADEMARK OFFICE

BEFORE THE PATENT TRIAL AND APPEAL BOARD

Volkswagen Group of America, Inc.,
Petitioner

v.

Michigan Motor Technologies LLC,
Patent Owner

Case IPR2020-00445
Patent No. 6,581,565

PATENT OWNER'S SUR-REPLY TO PETITIONER'S REPLY

Mail Stop PATENT BOARD
Patent Trial and Appeal Board
U.S. Patent and Trademark Office
P.O. Box 1450
Alexandria, VA 22313-1450
Submitted Electronically via PTAB E2E

Whether or not to institute an IPR in this matter can be decided by the Board on the basis of a single, straightforward issue, namely, the issue of whether it is reasonable that a POSA would have combined the references relied upon by Petitioner in such a manner as to arrive at a device/method for controlling a torque output of an engine that includes "a high pass filter which receives as an input the difference signal and outputs a filtered difference signal in which low frequency components are absent" (Exhibit 1001 at Claim 1) or "filtering out a plurality of low frequency components from the difference signal." (Ex. 1001 at Claim7.)

Petitioner states that "Scherer discloses a high-pass filter" and that "Robichaux discloses a comparator that outputs a difference signal." (Paper 9 at 2.) Petitioner contends that "… a POSA would have been motivated to use Scherer's high-pass filter to filter the difference signal generated by Robichaux's comparator." (Paper 9 at 3.) But Petitioner's position is fatally flawed for at least the following reasons.

Scherer discloses high-pass filtering "a desired torque signal," and does not disclose high-pass filtering a "difference signal." *Robichaux* discloses a comparator that outputs a "difference signal." Neither *Scherer* nor *Robichaux* (or any other reference relied upon by Petitioner) discloses high-pass filtering a "difference signal." Rather, *Scherer* discloses high-pass filtering "a desired torque signal" which is defined in the challenged claims of the '565 patent as an input to the

comparator that outputs a "difference signal." Assuming a POSA would consider combining the teachings of both *Suzuki* and *Robichaux*, the POSA would have been taught to "high-pass filter" an input to a comparator that outputs a "difference signal," rather than filtering the "difference signal." The only possible motivation for combining these two references in such a manner as to "high-pass filter" the "difference signal" is the disclosure of the '565 patent, using the challenged claims as a blueprint or roadmap. This clearly constitutes impermissible hindsight.

In this connection, "high pass filters" have been known in the art for decades. High-pass filtering of one or more inputs to a comparator that outputs a "difference signal" was well-known in the art at the time the '565 invention was made. The inventors of the prior art references certainly knew about "high pass filters" and about comparators that output a "difference signal." But unlike the inventors of the '565 patent, the prior art inventors did not teach or claim using the "high pass filter" to filter the output of the comparator (i.e., the "difference signal").

The '565 patent states " . . . there is a need for a method of correction of a steady state error between the torque demanded and an estimate of the torque produced." (Ex. 1001 at 1:57-59.) The way in which the '565 patent accomplishes this objective is by employing a "a high pass filter which receives as an input the difference signal and outputs a filtered difference signal in which low frequency components are absent" (*Id*. at Claim 1) or "filtering out a plurality of low frequency

components from the difference signal." (*Id*. at Claim 7.) The prior art references that Petitioner relies upon, to include *Scherer* and *Robichaux*, did not even identify the problem that the challenged claims of the '565 patent solves, much less teach a solution therefor. No matter how much spin and hindsight analysis that Petitioner can muster, the inescapable conclusion is that the prior art references relied upon by Petitioner, either individually or in combination, do not render obvious any of the challenged claims of the '565 patent.

The Board should reject Petitioner's erroneous arguments and decide to not institute *inter partes* review.

June 8, 2020

Respectfully submitted,

/s/ *Timothy Devlin*

Timothy Devlin
Registration No. 41706
DEVLIN LAW FIRM LLC
1526 Gilpin Avenue
Wilmington, DE 19806
(302)-449-9010
tdevlin@devlinlawfirm.com
TD-PTAB@devlinlawfirm.com
Attorney for Patent Owner

CERTIFICATE OF SERVICE

I hereby certify that on June 8, 2020, I caused a true and correct copy of the foregoing materials to be served via the Patent Office electronic filing system, and electronic service via email to the following attorneys of record pursuant to Petitioner's consent.

LEAD COUNSEL	**BACKUP COUNSEL**
Michael D. Specht mspecht-PTAB@sternekessler.com STERNE, KESSLER, GOLDSTEIN & FOX P.L.L.C. 1100 New York Avenue, N.W. Washington, DC 20005 (202) 371-2600	Jason A. Fitzsimmons, Reg. No. 65,367 jfitzsimmons-PTAB@sternekessler.com Danny E. Yonan, Reg. No. 53,812 dyonan-PTAB@sternekessler.com Kyle Conklin, Reg. No. 59,425 dyonan-PTAB@sternekessler.com John D. Higgins, Reg. No. 74,992 jhiggins-PTAB@sternekessler.com STERNE, KESSLER, GOLDSTEIN & FOX P.L.L.C. 1100 New York Avenue, N.W. Washington, D.C. 20005 Tel.: 202-371-2600 Fax: 202-371-2540

Respectfully submitted,

/s/ *Timothy Devlin*
Timothy Devlin
Registration No. 41706
DEVLIN LAW FIRM LLC
1526 Gilpin Avenue
Wilmington, DE 19806
(302)-449-9010
tdevlin@devlinlawfirm.com
TD-PTAB@devlinlawfirm.com
Attorney for Patent Owner

UNITED STATES PATENT AND TRADEMARK OFFICE

BEFORE THE PATENT TRIAL AND APPEAL BOARD

VOLKSWAGEN GROUP OF AMERICA, INC.,
Petitioner,

v.

MICHIGAN MOTOR TECHNOLOGIES LLC,
Patent Owner

Case IPR2020-00444

U.S. Patent No. 6,581,565 B2

PATENT OWNER'S MOTION FOR *PRO HAC VICE* ADMISSION UNDER 37 C.F.R. § 42.10(c)

Mail Stop PATENT BOARD
Patent Trial and Appeal Board
U.S. Patent and Trademark Office
P.O. Box 1450
Alexandria, VA 22313-1450
Submitted Electronically via PTAB E2E

I. STATEMENT OF THE PRECISE RELIEF REQUESTED

Pursuant to the February 7, 2020 Notice of Filing Date Accorded to Petition and Time for Filing Patent Owner Preliminary Response (Paper 4) and 37 C.F.R. §§ 42.10(c) and 42.22, Patent Owner Michigan Motor Technologies, LLC ("MMT" or "Patent Owner") respectfully requests that the Board recognize Robyn T. Williams of Devlin Law Firm LLC as backup counsel *pro hac vice* during this proceeding. This Motion for *Pro Hac Vice* Admission is filed in accordance with the "Order -- Authorizing Motion for *Pro Hac Vice* Admission" in Case IPR2013-00639 (hereinafter "Admission Order") as requested.

II. TIMING OF FILING

This Motion for *Pro Hac Vice* Admission is being filed no sooner than twenty-one (21) days after service of the petition as required by the Admission Order.

III. STATEMENT OF FACTS

The following statement of facts shows that there is good cause for the Board to recognize Ms. Williams *pro hac vice.* Ms. Williams is an experienced litigation attorney and has an established familiarity with the subject matter at issue in this proceeding.

Ms. Williams has read and will comply with the Office Patent Trial Practice Guide and the Board's Rules of Practice for Trials set forth in part 42 of the C.F.R.

Ms. Williams will be subject to the United States Patent and Trademark Office Code of Professional Responsibility set forth in 37 C.F.R. § 10.20 et seq. and disciplinary jurisdiction under 37 C.F.R. § 11.19(a).

Therefore, Patent Owner respectfully submits that there is good cause for the Board to recognize Ms. Williams as counsel *pro hac vice* during this proceeding.

IV. AFFIDAVIT OR DECLARATION OF INDIVIDUAL SEEKING TO APPEAR

This Motion for *Pro Hac Vice* Admission is accompanied by an Affidavit of Ms. Robyn Williams (Exhibit 2002) as required by the Admission Order.

Dated: June 26, 2020

DEVLIN LAW FIRM LLC

/s/ *Timothy Devlin*
Timothy Devlin
Registration No. 41,706
1526 Gilpin Avenue
Wilmington, DE 19806
(302)-449-9010
TD-PTAB@devlinlawfirm.com
Attorney for Patent Owner

CERTIFICATE OF SERVICE

Pursuant to 37 C.F.R. § 42.6(e), the undersigned certifies that on June 26, 2020, the foregoing document is being served via electronic mail upon the following counsel of record for Petitioner:

LEAD COUNSEL	BACKUP COUNSEL
Michael D. Specht (Reg. 54,463) mspecht-PTAB@sternekessler.com PTAB@sternekessler.com Postal and Hand-Delivery Address: Sterne, Kessler, Goldstein & Fox PLLC 1100 New York Avenue, N.W. Washington, D.C. 20005 Tel.: 202-371-2600	Jason A. Fitzsimmons (Reg. 65,367) jfitzsimmons-PTAB@sternekessler.com **ADDITIONAL BACKUP COUNSEL** Daniel E. Yonan (Reg. 53,812) dyonan-PTAB@sternekessler.com Kyle E. Conklin (Reg. 59,425) kconklin-PTAB@sternekessler.com John Higgins (Reg. 74,992) jhiggins-PTAB@sternekessler.com Postal and Hand-Delivery Address: Sterne, Kessler, Goldstein & Fox PLLC 1100 New York Avenue, N.W. Washington, D.C. 20005 Tel.: 202-371-2600

/s/ Timothy Devlin
Timothy Devlin

UNITED STATES PATENT AND TRADEMARK OFFICE

BEFORE THE PATENT TRIAL AND APPEAL BOARD

VOLKSWAGEN GROUP OF AMERICA, INC.,
Petitioner,

v.

MICHIGAN MOTOR TECHNOLOGIES LLC,
Patent Owner

Case IPR2020-00444

U.S. Patent No. 6,581,565 B2

AFFIDAVIT OF MS. ROBYN WILLIAMS IN SUPPORT OF PATENT OWNER'S MOTION FOR *PRO HAC VICE* ADMISSION

I, Robyn Williams, recognizing that willfully false misstatements subject me to the penalty of perjury, hereby apply to appear *pro hac vice* before the Office in *Inter Partes* Review proceedings for PTAB Case No. IPR2020-00444, and attest to the following:

1. I am a member in good standing of the Bar of New York.

2. I have not been suspended or disbarred from practice before any court or administrative body;

3. I have never had an application for admission to practice before any court or administrative body denied;

4. No sanction or contempt citation has been imposed against me by any court or administrative body;

5. I have read and will comply with the Office Patent Trial Practice Guide and the Board's Rules of Practice for Trials set forth in part 42 of the C.F.R.;

6. I will be subject to the United States Patent and Trademark Office Code of Professional Responsibility set forth in 37 C.F.R. § § 11.101 *et seq.* and disciplinary jurisdiction under 37 C.F.R. § 11.19(a);

7. I have been admitted to appear *pro hac vice* before the Office in *Inter Partes* Review proceedings for PTAB Case No. IPR2019-01274 on April 1, 2020.

8. I intend to concurrently apply to be admitted *pro hac vice* before the Office for the following *Inter Parties* Review:

- IPR2019-01645
- IPR2020-00068
- IPR2020-00161
- IPR2020-00169
- IPR2020-00198
- IPR2020-00226
- IPR2020-00228 to IPR2020-00229
- IPR2020-00231
- IPR2020-00445 to IPR2020-00446
- IPR2020-00451 to IPR2020-00455
- IPR2020-00894.

9. I am a litigation attorney with nearly four years of experience representing clients in patent cases involving automobile technology. I regularly litigate patent cases in federal district courts and have been involved in various phases of litigation including claim construction, summary judgment, and expert discovery and appeals.

10. I have a high degree of knowledge with the subject matter at issue in this proceeding. Specifically, I am familiar with the technology and issued claims in U.S. Patent No. 6,581,565 B2 (the "'565 patent"). I am also familiar with the

prior art references cited by Petitioners in this proceeding and the alleged grounds of invalidity.

I hereby declare that all statements made of my own knowledge are true and that all statements made on information and belief are believed to be true. I further declare that these statements were made with the knowledge that willful false statements and the like so made are punishable by fine or imprisonment, or both, under Section 1001 of the Title 18 of the United States Code.

Dated: June 26, 2020

Respectfully submitted,

/Robyn T. Williams/

Robyn T. Williams
Devlin Law Firm LLC
1526 Gilpin Avenue
Wilmington, Delaware 19806
Tel: (302) 449-9010
Fax: (302) 353-4251
rwilliams@devlinlawfirm.com

UNITED STATES PATENT AND TRADEMARK OFFICE

BEFORE THE PATENT TRIAL AND APPEAL BOARD

VOLKSWAGEN GROUP OF AMERICA, INC.,
Petitioner,

v.

MICHIGAN MOTOR TECHNOLOGIES LLC,
Patent Owner

Case IPR2020-00445

U.S. Patent No. 6,581,565 B2

AFFIDAVIT OF MS. ROBYN WILLIAMS IN SUPPORT OF PATENT OWNER'S MOTION FOR *PRO HAC VICE* ADMISSION

I, Robyn Williams, recognizing that willfully false misstatements subject me to the penalty of perjury, hereby apply to appear *pro hac vice* before the Office in *Inter Partes* Review proceedings for PTAB Case No. IPR2020-00445, and attest to the following:

1. I am a member in good standing of the Bar of New York.

2. I have not been suspended or disbarred from practice before any court or administrative body;

3. I have never had an application for admission to practice before any court or administrative body denied;

4. No sanction or contempt citation has been imposed against me by any court or administrative body;

5. I have read and will comply with the Office Patent Trial Practice Guide and the Board's Rules of Practice for Trials set forth in part 42 of the C.F.R.;

6. I will be subject to the United States Patent and Trademark Office Code of Professional Responsibility set forth in 37 C.F.R. § § 11.101 *et seq.* and disciplinary jurisdiction under 37 C.F.R. § 11.19(a);

7. I have been admitted to appear *pro hac vice* before the Office in *Inter Partes* Review proceedings for PTAB Case No. IPR2019-01274 on April 1, 2020.

8. I intend to concurrently apply to be admitted *pro hac vice* before the Office for the following *Inter Parties* Review:

- IPR2019-01645
- IPR2020-00068
- IPR2020-00161
- IPR2020-00169
- IPR2020-00198
- IPR2020-00226
- IPR2020-00228 to IPR2020-00229
- IPR2020-00231
- IPR2020-00444
- IPR2020-00446
- IPR2020-00451 to IPR2020-00455
- IPR2020-00894.

9. I am a litigation attorney with nearly four years of experience representing clients in patent cases involving automobile technology. I regularly litigate patent cases in federal district courts and have been involved in various phases of litigation including claim construction, summary judgment, and expert discovery and appeals.

10. I have a high degree of knowledge with the subject matter at issue in this proceeding. Specifically, I am familiar with the technology and issued claims in U.S. Patent No. 6,581,565 B2 (the "'565 patent"). I am also familiar with the

prior art references cited by Petitioners in this proceeding and the alleged grounds of invalidity.

I hereby declare that all statements made of my own knowledge are true and that all statements made on information and belief are believed to be true. I further declare that these statements were made with the knowledge that willful false statements and the like so made are punishable by fine or imprisonment, or both, under Section 1001 of the Title 18 of the United States Code.

Dated: June 26, 2020

Respectfully submitted,

/Robyn T. Williams/

Robyn T. Williams
Devlin Law Firm LLC
1526 Gilpin Avenue
Wilmington, Delaware 19806
Tel: (302) 449-9010
Fax: (302) 353-4251
rwilliams@devlinlawfirm.com

UNITED STATES PATENT AND TRADEMARK OFFICE

BEFORE THE PATENT TRIAL AND APPEAL BOARD

VOLKSWAGEN GROUP OF AMERICA, INC.,
Petitioner,

v.

MICHIGAN MOTOR TECHNOLOGIES LLC,
Patent Owner

Case IPR2020-00445

U.S. Patent No. 6,581,565 B2

PATENT OWNER'S MOTION FOR *PRO HAC VICE* ADMISSION UNDER 37 C.F.R. § 42.10(c)

Mail Stop PATENT BOARD
Patent Trial and Appeal Board
U.S. Patent and Trademark Office
P.O. Box 1450
Alexandria, VA 22313-1450
Submitted Electronically via PTAB E2E

I. STATEMENT OF THE PRECISE RELIEF REQUESTED

Pursuant to the February 7, 2020 Notice of Filing Date Accorded to Petition and Time for Filing Patent Owner Preliminary Response (Paper 4) and 37 C.F.R. §§ 42.10(c) and 42.22, Patent Owner Michigan Motor Technologies, LLC ("MMT" or "Patent Owner") respectfully requests that the Board recognize Robyn T. Williams of Devlin Law Firm LLC as backup counsel *pro hac vice* during this proceeding. This Motion for *Pro Hac Vice* Admission is filed in accordance with the "Order -- Authorizing Motion for *Pro Hac Vice* Admission" in Case IPR2013-00639 (hereinafter "Admission Order") as requested.

II. TIMING OF FILING

This Motion for *Pro Hac Vice* Admission is being filed no sooner than twenty-one (21) days after service of the petition as required by the Admission Order.

III. STATEMENT OF FACTS

The following statement of facts shows that there is good cause for the Board to recognize Ms. Williams *pro hac vice.* Ms. Williams is an experienced litigation attorney and has an established familiarity with the subject matter at issue in this proceeding.

Ms. Williams has read and will comply with the Office Patent Trial Practice Guide and the Board's Rules of Practice for Trials set forth in part 42 of the C.F.R.

Ms. Williams will be subject to the United States Patent and Trademark Office Code of Professional Responsibility set forth in 37 C.F.R. § 10.20 et seq. and disciplinary jurisdiction under 37 C.F.R. § 11.19(a).

Therefore, Patent Owner respectfully submits that there is good cause for the Board to recognize Ms. Williams as counsel *pro hac vice* during this proceeding.

IV. AFFIDAVIT OR DECLARATION OF INDIVIDUAL SEEKING TO APPEAR

This Motion for *Pro Hac Vice* Admission is accompanied by an Affidavit of Ms. Robyn Williams (Exhibit 2002) as required by the Admission Order.

Dated: June 26, 2020

DEVLIN LAW FIRM LLC

/s/ *Timothy Devlin*
Timothy Devlin
Registration No. 41,706
1526 Gilpin Avenue
Wilmington, DE 19806
(302)-449-9010
TD-PTAB@devlinlawfirm.com
Attorney for Patent Owner

CERTIFICATE OF SERVICE

Pursuant to 37 C.F.R. § 42.6(e), the undersigned certifies that on June 26, 2020, the foregoing document is being served via electronic mail upon the following counsel of record for Petitioner:

LEAD COUNSEL	BACKUP COUNSEL
Michael D. Specht (Reg. 54,463) mspecht-PTAB@sternekessler.com PTAB@sternekessler.com Postal and Hand-Delivery Address: Sterne, Kessler, Goldstein & Fox PLLC 1100 New York Avenue, N.W. Washington, D.C. 20005 Tel.: 202-371-2600	Jason A. Fitzsimmons (Reg. 65,367) jfitzsimmons-PTAB@sternekessler.com **ADDITIONAL BACKUP COUNSEL** Daniel E. Yonan (Reg. 53,812) dyonan-PTAB@sternekessler.com Kyle E. Conklin (Reg. 59,425) kconklin-PTAB@sternekessler.com John Higgins (Reg. 74,992) jhiggins-PTAB@sternekessler.com Postal and Hand-Delivery Address: Sterne, Kessler, Goldstein & Fox PLLC 1100 New York Avenue, N.W. Washington, D.C. 20005 Tel.: 202-371-2600

/s/ Timothy Devlin
Timothy Devlin

Trials@uspto.gov
571-272-7822

Paper 12
Date: August 5, 2020

UNITED STATES PATENT AND TRADEMARK OFFICE

BEFORE THE PATENT TRIAL AND APPEAL BOARD

VOLKSWAGEN GROUP OF AMERICA, INC.,
Petitioner,

v.

MICHIGAN MOTOR TECHNOLOGIES LLC,
Patent Owner.

IPR2020-00445
Patent 6,581,565 B2

Before NEIL T. POWELL, BARBARA A. PARVIS, and
SEAN P. O'HANLON, *Administrative Patent Judges*.

POWELL, *Administrative Patent Judge*.

DECISION
Granting Institution of *Inter Partes* Review
35 U.S.C. § 314

I. INTRODUCTION

A. Background

Volkswagen Group of America, Inc. ("Petitioner") filed a Petition (Paper 3, "Pet.") to institute an *inter partes* review of claims 1–7 of U.S. Patent No. 6,581,565 B2 (Ex. 1001, "the '565 patent"). Michigan Motor Technologies LLC ("Patent Owner") filed a Preliminary Response. Paper 7 ("Prelim. Resp."). Pursuant to our authorization, Petitioner filed a Reply (Paper 9, "Pet. Reply"), and Patent Owner filed a Sur-reply (Paper 10, "Sur-reply").

We have authority to determine whether to institute an *inter partes* review. 35 U.S.C. § 314(b) (2018); 37 C.F.R. § 42.4(a) (2020). We may not institute an *inter partes* review "unless . . . there is a reasonable likelihood that the petitioner would prevail with respect to at least 1 of the claims challenged in the petition." 35 U.S.C. § 314(a). The Supreme Court has held that a decision to institute under 35 U.S.C. § 314 may not institute review on less than all claims challenged in the petition. *SAS Inst. Inc. v. Iancu*, 138 S. Ct. 1348, 1355–56 (2018). Moreover, if the PTAB institutes a trial, the PTAB will institute on all challenges raised in the petition. *See* Patent Trial and Appeal Board Consolidated Trial Practice Guide ("CTPG") 64 (Nov. 2019), https://www.uspto.gov/sites/default/files/documents/tpgnov.pdf ("The Board will not institute on fewer than all claims or all challenges in a petition.").

Applying those standards, and upon consideration of the information presented in the Petition, we determine that Petitioner has established a reasonable likelihood of success in proving that at least one claim of the '565 patent is unpatentable. Accordingly, we institute an *inter partes* review

as to all challenged claims of the '565 patent on all grounds raised in the Petition. We base our factual findings and conclusions at this stage of the proceeding on the evidentiary record developed so far. This is not a final decision as to the construction of any claim term or the patentability of any claim.

B. Related Proceeding

The parties identify the following matter as related to the '565 patent (Pet. 2; Paper 5, 2):

> *Michigan Motor Technologies LLC v. Volkswagen AG*, No. 2:19-cv-10485 (E.D. Mich.).

Additionally, in IPR2020-00444, Petitioner has filed another petition challenging claims 1–7 of the '565 patent. Pet. 2.

C. The '565 Patent

The '565 patent relates to torque control for internal combustion engines. Ex. 1001, code (57). The '565 patent describes an exemplary engine in connection with Figure 1, which is reproduced below.

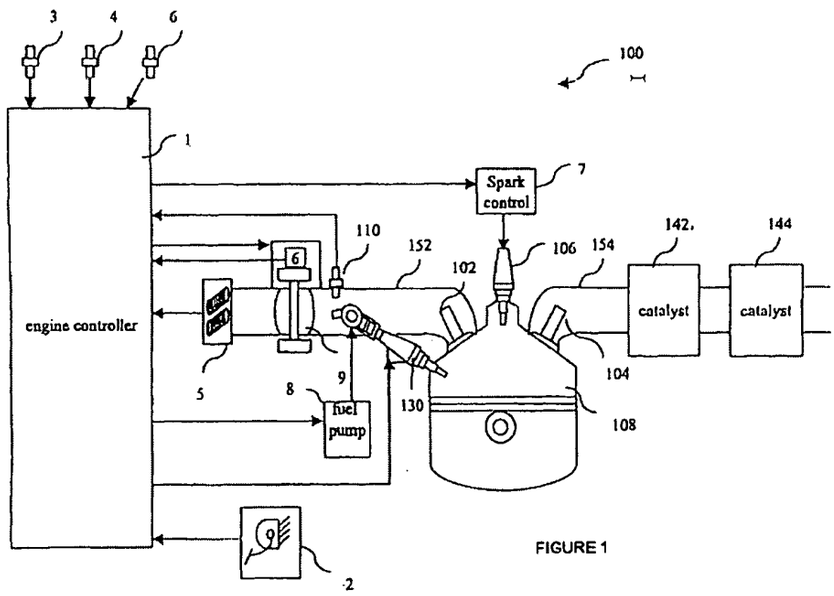

FIGURE 1

Figure 1 shows direct injection spark ignition engine 100, which includes air intake valve 102, exhaust valve 104, spark plug 106, combustion chamber 108, manifold absolute pressure sensor 110, fuel injector 130, three way catalytic converter 142, Nox trap/catalyst 144, air-intake manifold 152, and exhaust manifold 154. *Id.* at 2:40–56.

Direct injection spark ignition engine 100 also includes engine controller 1. *Id.* at 2:40–42. Accelerator pedal and sensor assembly 2, engine speed sensor 3, engine temperature sensor 4, air charge temperature sensor 5, manifold absolute pressure sensor 110, and throttle position indicator 6 all provide signals to engine controller 1. *Id.* at 2:42–46.

Air and fuel mix in combustion chamber 108. *Id.* at 2:47–49. Throttle 9 controls an air charge, which travels via intake manifold 152 through intake air valve 102. *Id.* at 2:48–50. Fuel injector 130 injects the fuel into combustion chamber 108 directly. *Id.* at 2:47–48.

Spark control unit 7 operates spark plug 106 to produce a spark for igniting the air/fuel mixture. *Id.* at 2:51–53. The resulting combustion produces exhaust gases, which exit through exhaust valve 104 to exhaust manifold 154. *Id.* at 2:53–55.

The '565 patent discusses calculating a desired output torque in connection with Figure 2, which is reproduced below.

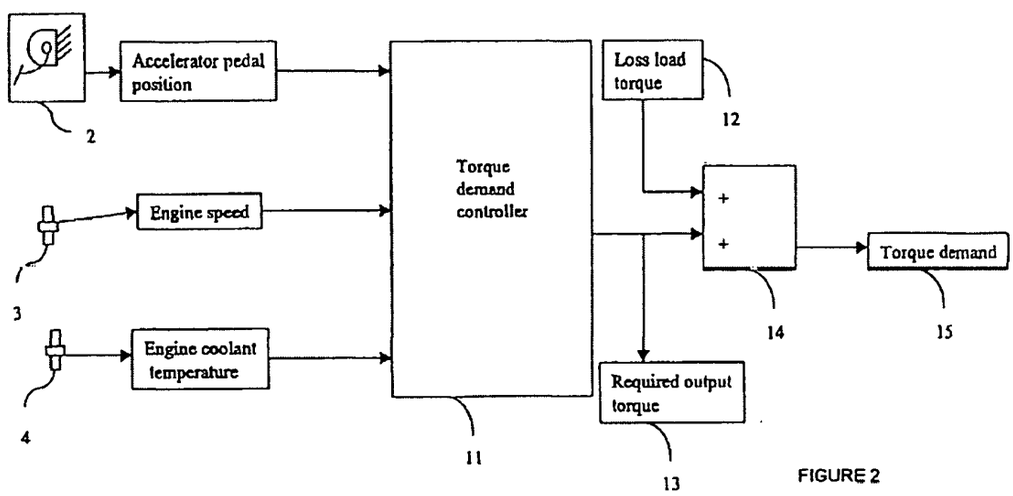

FIGURE 2

Figure 2 is a block diagram showing torque demand controller 11, which forms part of engine controller 1. *Id.* at 2:34–35, 2:57–58.

Torque demand controller 11 receives various signals and outputs torque demand signal 15. *Id.* at 2:58–67. Torque demand controller 11 receives an accelerator pedal position signal from accelerator pedal and sensor assembly 2, an engine speed signal from engine speed sensor 3, and an engine temperature signal from engine temperature sensor 4. *Id.* at 2:59–63. Based on these inputs, torque demand controller 11 determines required output torque signal 13, to which loss torque load signal 12 is added, which produces torque demand signal 15. *Id.* at 2:57–67.

The '565 patent discusses how the torque demand signal is used in connection with Figure 3, which is reproduced below.

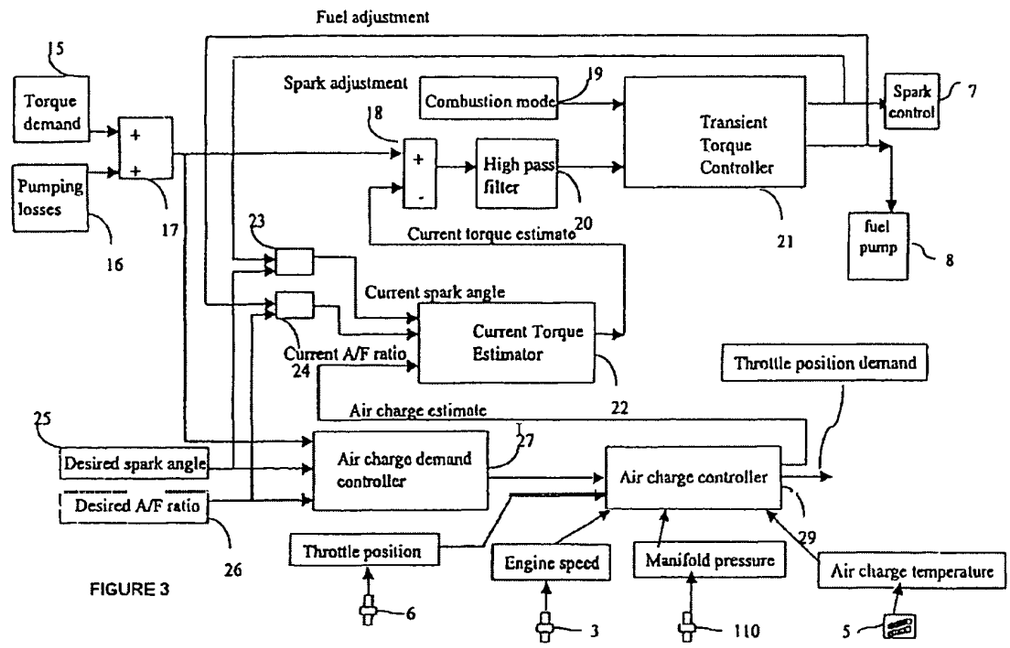

FIGURE 3

Figure 3 "is a block diagram of a torque producer." *Id.* at 2:36.

The torque producer of Figure 3 includes adder 17. *Id.* at 3:1–6. Adder 17 receives torque demand signal 15, as well as pumping losses signal 16, "which represents losses due to the inherent losses in the engine cycle." *Id.* at 3:1–4. Adder 17 generates a desired torque signal.

Air charge demand controller 27 receives the desired torque signal generated by adder 17, as well as desired spark angle signal 25 and desired air fuel ratio signal 26. *Id.* at 3:7–9. Air charge demand controller 27 produces an air charge demand signal, which it provides to air charge controller 29. *Id.* at 3:13–15.

Based on the air charge demand signal and various other inputs, air charge controller 29 provides multiple outputs. *Id.* at 3:13–22. Air charge controller 29 sends a desired throttle position signal to throttle 9. *Id.* at

3:19–21. Air charge controller 29 also produces "a signal representing an estimate of the air charge." *Id.* at 3:19–22.

Current torque estimator 22 receives the air charge estimate signal, along with a signal representing the current air/fuel ratio and a signal representing the current spark angle. *Id.* at 3:27–33. Based on these signals, current torque estimator 22 produces "a signal representing an estimate of the current torque." *Id.* at 3:29–33.

Comparator 18 compares the estimate of the current torque to the desired torque signal, producing an error signal. *Id.* at 3:34–36. High pass filter 20 filters the error signal. *Id.*

Transient torque controller 21 uses the filtered error signal "to generate signals for temporarily adjusting the torque produced by the engine 100." *Id.* at 3:36–39. Depending on whether combustion mode signal 19 indicates engine 100 is operating in stratified mode or homogeneous mode, either a fuel adjustment signal is generated to adjust fueling, or a spark adjustment signal is generated to adjust spark timing. *Id.* at 3:40–50.

D. Illustrative Claim

The '565 patent includes seven claims, all of which are challenged. Claims 1 and 7 are independent. Claims 2–6 depend, directly or indirectly, from claim 1. Claim 1 is illustrative and reproduced below.

> 1. A device for controlling a torque output of an engine, the device comprising:
> a torque demand controller for generating a torque demand signal; and
> a torque producer which receives the torque demand signal, the torque producer includes:
> an estimator which receives as inputs a current spark angle signal, a current air/fuel ratio signal and an

> estimated air charge signal and outputs an estimated torque signal;
>
> a comparator which receives as inputs the estimated torque signal and a desired torque signal and outputs a difference signal;
>
> a high pass filter which receives as an input the difference signal and outputs a filtered difference signal in which low frequency components are absent; and
>
> a transient torque controller which receives as an input the filtered difference signal and outputs a fuel adjustment signal and a spark adjustment signal.

Id. at 4:2–22.

E. Applied References

Petitioner relies upon the following references:

Kelsuke Suzuki et al., U.S. Patent No. 6,006,717 (Ex. 1005, "Suzuki"), issued Dec. 28, 1999.

Michael J. Cullen et al., U.S. Patent No. 5,241,855 (Ex. 1006, "Cullen"), issued Sept. 7, 1993.

Matthias Scherer et al., U.S. Patent No. 6,047,681 (Ex. 1007, "Scherer"), issued Apr. 11, 2000.

Shinsuke Takahashi et al., U.S. Patent No. 5,282,449 (Ex. 1008, "Takahashi"), issued Feb. 1, 1994.

Jerry Dean Robichaux et al., European Patent Application No. EP 1 076 165 A2 (Ex. 1020, "Robichaux"), published Feb. 14, 2001.

Pet. 4–5. Petitioner also relies upon the Declaration of C. Arthur MacCarley, Ph.D., PE. Ex. 1003. Patent Owner relies on the Declaration of Russell A. Leonard, Jr., Ph.D. Ex. 2001.

F. Asserted Grounds of Unpatentability

Petitioner challenges the patentability of claims 1–7 of the '565 patent based on the following grounds. Pet. 5.

Claims Challenged	35 U.S.C. §	Reference(s)/Basis
1, 7	103[1]	Robichaux, Scherer
2, 3	103	Robichaux, Scherer, Takahashi
4	103	Robichaux, Scherer, Suzuki
5, 6	103	Robichaux, Scherer, Suzuki, Takahashi

II. ANALYSIS

A. Level of Ordinary Skill in the Art

Petitioner contends that a person having ordinary skill in the art at the time of the invention ("POSA") would have had "a B.S. degree in Electrical Engineering or Mechanical Engineering (or equivalent), as well as at least 2–4 years of academic or industry experience in the relevant field of engine control systems." Pet. 16–17 (citing Ex. 1003 ¶¶ 40–41).

Patent Owner contends that a person having ordinary skill in the art at the time of the invention is "a person with (1) a B.S. in mechanical engineering or a closely related field with three or more years of experience in either engine systems or engine control systems or (2) at least a M.S. in mechanical engineering." Prelim. Resp. 13 (citing Ex. 2001 ¶ 14.)

Thus, both parties propose substantially similar definitions of the level of ordinary skill in the art, both requiring a bachelor's degree in mechanical engineering or the equivalent with either a few years of industry or academic (such as that required to obtain a master's degree in mechanical engineering)

[1] The Leahy-Smith America Invents Act ("AIA"), Pub. L. No. 112-29, 125 Stat. 284, 287–88 (2011), amended 35 U.S.C. § 103. Because the '565 patent was filed before March 16, 2013, the effective date of the relevant amendment, the pre-AIA version of § 103 applies.

experience. At this stage, we find Petitioner's description to be more consistent with the disclosures of the '565 patent and the prior art of record, as it is focused on the field of engine control systems. *See* Ex. 1001, 1:6–8 ("This invention relates to an engine torque controller for spark ignition engines . . . ."); Ex. 1007 ("The invention provides a process and an apparatus for controlling the engine torque of an internal-combustion engine."); Ex. 1020 ("The present invention is directed to a system and method for controlling engine torque . . . ."). Accordingly, we adopt Petitioner's definition as our own for purposes of this Decision. *See, e.g.*, *In re GPAC Inc.*, 57 F.3d 1573, 1579 (Fed. Cir. 1995).[2]

B. Claim Construction

We construe claims "using the same claim construction standard that would be used to construe the claim in a civil action under 35 U.S.C. 282(b), including construing the claim in accordance with the ordinary and customary meaning of such claim as understood by one of ordinary skill in the art and the prosecution history pertaining to the patent." 37 C.F.R. § 42.100(b); *see also Phillips v. AWH Corp.*, 415 F.3d 1303 (Fed. Cir. 2005) (en banc).

In this context, claim terms "are generally given their ordinary and customary meaning" as understood by a person of ordinary skill in the art in question at the time of the invention. *Phillips*, 415 F.3d at 1312–13; *see also CCS Fitness, Inc. v. Brunswick Corp.*, 288 F.3d 1359, 1366 (Fed. Cir. 2002)

[2] If Patent Owner argues a different level of ordinary skill in the art in its Response, the parties are encouraged to address whether there are any material differences between the two proposals and what impact, if any, the different level has on the obviousness analysis.

(There is "a 'heavy presumption' that a claim term carries its ordinary and customary meaning."). "In determining the meaning of the disputed claim limitation, we look principally to the intrinsic evidence of record, examining the claim language itself, the written description, and the prosecution history, if in evidence." *DePuy Spine, Inc. v. Medtronic Sofamor Danek, Inc.*, 469 F.3d 1005, 1014 (Fed. Cir. 2006) (citing *Phillips*, 415 F.3d at 1312–17). Extrinsic evidence is "less significant than the intrinsic record in determining 'the legally operative meaning of claim language.'" *Phillips*, 415 F.3d at 1317 (quoting *C.R. Bard, Inc. v. U.S. Surgical Corp.*, 388 F.3d 858, 862 (Fed. Cir. 2004)).

Only those claim terms that are in controversy need to be construed, and only to the extent necessary to resolve the controversy. *See Nidec Motor Corp. v. Zhongshan Broad Ocean Motor Co.*, 868 F.3d 1013, 1017 (Fed. Cir. 2017) (stating that "we need only construe terms 'that are in controversy, and only to the extent necessary to resolve the controversy'" (quoting *Vivid Techs., Inc. v. Am. Sci. & Eng'g, Inc.*, 200 F.3d 795, 803 (Fed. Cir. 1999))).

Petitioner argues that the claims "should receive their plain and ordinary meaning, in the context of the '565 patent specification, under the *Phillips* standard." Pet. 17. Patent Owner agrees. Prelim. Resp. 14. For purposes of resolving the parties' patentability disputes, we need not construe expressly any claim language.

C. Discretion under 35 U.S.C. § 314

Under § 314(a), we have discretion to deny institution of an *inter partes* review. *Cuozzo Speed Techs., LLC v. Lee*, 136 S. Ct. 2131, 2140 (2016); *SAS Inst. Inc. v. Iancu*, 138 S. Ct. 1348, 1356 (2018); *Harmonic Inc.*

v. Avid Tech., Inc., 815 F.3d 1356, 1367 (Fed. Cir. 2016) ("[T]he PTO is permitted, but never compelled, to institute an IPR proceeding."); *see also* 37 C.F.R. § 42.4(a) ("The Board institutes the trial on behalf of the Director.").

In deciding whether to institute an *inter partes* review, we consider the guidance in the Consolidated Trial Practice Guide, which states

> Based on the Board's prior experience, one petition should be sufficient to challenge the claims of a patent in most situations. Two or more petitions filed against the same patent at or about the same time . . . may place a substantial and unnecessary burden on the Board and the patent owner and could raise fairness, timing, and efficiency concerns.

CTPG 59.

More detailed guidance regarding whether we exercise our discretion to deny institution in the event of multiple petitions challenging the same patent appears in our precedential decision *General Plastic Industrial Co., Ltd. v. Canon Kabushiki Kaisha,* IPR2016-01357, Paper 19 at 15–16 (PTAB Sept. 6, 2017) (precedential). *General Plastic* sets forth the following factors:

1. whether the same petitioner previously filed a petition directed to the same claims of the same patent;
2. whether at the time of filing of the first petition the petitioner knew of the prior art asserted in the second petition or should have known of it;
3. whether at the time of filing of the second petition the petitioner already received the patent owner's preliminary response to the first petition or received the Board's decision on whether to institute review in the first petition;
4. the length of time that elapsed between the time the petitioner learned of the prior art asserted in the second petition and the filing of the second petition;

5. whether the petitioner provides adequate explanation for the time elapsed between the filings of multiple petitions directed to the same claims of the same patent;
6. the finite resources of the Board; and
7. the requirement under 35 U.S.C. § 316(a)(11) to issue a final determination not later than 1 year after the date on which the Director notices institution of review.

Id. at 16.

Here, Petitioner has filed on the same day two petitions challenging claims 1–7 of the '565 patent. In IPR2020-00444, Petitioner presents two obviousness grounds, one based on Suzuki, Cullen, and Scherer, the other based on Suzuki, Cullen, Scherer, and Takahashi. IPR2020-00444, Paper 2 at 5. In this proceeding, Petitioner presents four obviousness challenges, the first based on Robichaux and Scherer, each of the others based on Robichaux and Scherer combined with one or both of Takahashi and Suzuki. Pet. 5.

Petitioner filed a Notice of Ranking. Paper 2 ("Notice"). Arguing that "institution of both petitions is appropriate," the Notice nonetheless ranks the IPR2020-00444 petition above the Petition in this proceeding. Notice 1. The Notice then explains why Petitioner believes institution of both petitions is appropriate. *Id.* at 3–5. Petitioner asserts that all of the *General Plastic* factors weigh in favor of instituting both petitions. *Id.* Because the petitions were filed on the same day, Petitioner contends that the inefficiency and prejudice concerns underlying *General Plastic* factors 1–5 do not apply with respect to the Petition here and in IPR2020-00444. *Id.* at 3. Therefore, Petitioner argues *General Plastic* factors 1–5 weigh in favor of instituting both petitions. *Id.*

Petitioner notes a similarity between *General Plastic* factor 6, "the finite resources of the Board," and the CTPG's concern that multiple petitions could "place a substantial and unnecessary burden on the Board and the patent owner and could reduce fairness, timing, and efficiency concerns" (CTPG 59). Notice 3–4. Petitioner argues that its filing of two petitions presents little additional burden for the Board or Patent Owner. *Id.* at 4. Petitioner explains that each petition has only one primary reference and, in aggregate between the two petitions, each claim is subject to only two challenges. *Id.* Petitioner also notes that the references asserted in the petitions overlaps significantly, thereby minimizing any additional burden of instituting a second petition. *Id.* Petitioner asserts that "[o]n balance, the incremental burden on the Board or Patent Owner is significantly outweighed by the potential prejudice to Petitioner VWGoA from a discretionary denial of an *inter partes* review against a patent it was accused of infringing." *Id.* Thus, Petitioner contends, *General Plastic* factor 6 weighs in favor of instituting both petitions. *Id.*

Petitioner argues that *General Plastic* factor 7 also weighs in favor of instituting both petitions

> because these two petitions are being filed on the same day, and thus their respective schedules (or schedule if consolidated) may be aligned and will not hinder the Board's ability to issue a final determination within one year of institution. Indeed, VWGoA would be amenable to consolidated depositions and hearings in these two proceedings, further minimizing any burden on the Board and Patent Owner.

Notice 5.

Patent Owner does not dispute Petitioner's arguments that its simultaneous filing of two petitions neither prejudices Patent Owner nor

unduly burdens the Board or Patent Owner. *See generally* Prelim. Resp.; Sur-reply.

We agree with Petitioner that a discretionary denial of one petition could unduly prejudice Petitioner, as the two petitions have different vulnerabilities. In this proceeding, Petitioner needs only two references to address independent claims 1 and 7, but asserts Robichaux as prior art under 35 U.S.C. § 102(a), creating the possibility of Patent Owner swearing behind Robichaux. In IPR2020-00444, on the other hand, all of the references are asserted as prior art under 35 U.S.C. § 102(b), forestalling any attempt to swear behind the references, but the challenge of independent claims 1 and 7 relies on three references, creating additional vulnerability to arguments from Patent Owner regarding the references' teachings and the rationales for combining the references.

Taking a holistic view of the unique circumstances in this proceeding, we find this constitutes a rare instance in which we should decline to exercise our discretion to deny the Petition due to Petitioner's filing of two petitions.

D. Discretion under 35 U.S.C. § 325(d)

In *Advanced Bionics, LLC v. Med-El Elektromedizinische Geräte GMBH*, IPR2019-01469, Paper 6 (PTAB Feb. 13, 2020) (precedential) ("*Advanced Bionics*"), the Board applied a two-part framework in considering whether to exercise discretion to deny institution under § 325(d): "(1) whether the same or substantially the same art previously was presented to the Office or whether the same or substantially the same arguments previously were presented to the Office; and (2) if either condition of [the] first part of the framework is satisfied, whether the

petitioner has demonstrated that the Office erred in a manner material to the patentability of challenged claims." *Advanced Bionics* at 8.

Within this two-part framework, the Board considers a number of non-exclusive factors in evaluating whether to exercise its discretion under § 325(d). *See Becton, Dickinson & Co. v. B. Braun Melsungen AG*, IPR2017-01586, Paper 8 (PTAB Dec. 15, 2017) (precedential as to § III.C.5, first para.) ("*Becton, Dickinson*"); *see also Advanced Bionics* at 9–11. The factors set forth in *Becton, Dickinson* are as follows:

> (a) the similarities and material differences between the asserted art and the prior art involved during examination; (b) the cumulative nature of the asserted art and the prior art evaluated during examination; (c) the extent to which the asserted art was evaluated during examination, including whether the prior art was the basis for rejection; (d) the extent of the overlap between the arguments made during examination and the manner in which petitioner relies on the prior art; (e) whether petitioner has pointed out sufficiently how the examiner erred in its evaluation of the asserted prior art; and (f) the extent to which additional evidence and facts presented in the petition warrant reconsideration of the prior art or arguments.

Becton, Dickinson at 17–18.

Factors (a), (b), and (d) of the *Becton, Dickinson* factors relate to whether the art or arguments presented in the Petition are the same or substantially the same as those previously presented to the Office. *Advanced Bionics* at 10. Factors (c), (e), and (f) "relate to whether the petitioner has demonstrated a material error by the Office" in its prior consideration of that art or arguments. *Id.* Only if the same or substantially the same art or arguments were previously presented to the Office do we then consider whether petitioner has demonstrated a material error by the Office. *Id.* "At bottom, this framework reflects a commitment to defer to previous Office

evaluations of the evidence of record unless material error is shown." *Id.* at 9.

The Petition argues that we should not deny institution under § 325(d). Pet. 26–29. The Petition notes that Scherer was cited in an information disclosure statement during prosecution of U.S. Patent Application No. 14/928,980 ("the '980 application"), which issued as the '565 patent. *Id.* at 27. The Petition argues, however, that it presents Scherer in combination with Robichaux, which the Office did not consider during prosecution of the '980 application. *Id.* at 29. Petitioner asserts that the Petition demonstrates that

> Robichaux's system generates a demand torque, estimates an engine torque output, compares the demand torque to the estimated torque to determine the difference, and controls torque output through fuel quantity and spark timing adjustments based on the calculated difference. . . . Robichaux also estimates the torque output based on a current spark angle, a current air/fuel ratio, and an estimated air charge. . . . Scherer's transient torque control system uses a high-pass filter for its typical purpose, here, removing the low-frequency component of a torque signal and output the filtered signal to a torque controller. . . . And a [person of ordinary skill in the art] would have been motivated to combine Scherer's teachings with Robichaux's torque controller, providing the predictable result of precisely controlling engine torque output. . . . Accordingly, combining Robichaux and Scherer does not present the same or substantially similar prior art or arguments before the Office, so the Board should not deny institution under § 325(d).

Id.

Patent Owner argues that

> *Scherer* was already considered by the Examiner during prosecution of [the '980 application] and should thus not even be considered under the provisions of 35 U.S.C. § 325(d). All the other prior art references upon which Petitioner relies are merely

> cumulative with the admitted prior art, and thus, should also not be considered.

Prelim. Resp. 5. Patent Owner adds that

> The '565 patent discloses what was well known in the prior art, namely, that, "[i]n engine torque controllers for DISI engines, when the engine is operated in stratified mode, spark angle has little influence on the torque produced. . . . The torque producer modifies the air/fuel in order to control the torque produced. . . . Conversely, when the engine is operating in homogenous mode . . . [t]he torque producer modifies the timing of the spark ignition in order to control the torque produced." (Ex. 1001 at 1:36-45; (*Id.* at 23.)[).] This disclosure constitutes the "admitted prior art" of the '565 patent.

Id. at 11.

In response, Petitioner argues, among other things, that Robichaux is not cumulative of the admitted prior art. Petitioner explains that

> In addition to [admitted prior art] features, Robichaux discloses (1) a torque controller, Pet., 40–42; (2) a torque producer including an estimator, *id.*, 43–45; (3) a comparator, *id.*, 45–46; and (4) a transient torque controller, *id.*, 51–54. The Office never considered that a single prior art reference included these additional features. And failing to consider Robichaux was material error as the '565 patent claims are obvious in view of Robichaux and Scherer.

Pet. Reply 7–8.

Patent Owner does not respond to Petitioner's assertion that Robichaux teaches a number of things beyond the admitted prior art. *See generally* Sur-reply.

We begin our analysis by considering whether "the same or substantially the same prior art or arguments" were presented previously to the Office. To do so, we look to *Becton, Dickinson* factors (a), (b), and (d). *Advanced Bionics* at 10.

Considering *Becton, Dickinson* factors (a) and (b), we find the art primarily asserted by Petitioner materially differs from and is not cumulative to the art involved during examination of the '980 patent. During examination of the '980 application, Scherer was cited by the Applicant on an Information Disclosure Statement, and the Examiner indicated on the Information Disclosure Statement that Scherer was considered. *See* Ex. 1002, 42–44. Aside from this, the present record reflects that the art asserted by Petitioner bears little or no similarity to and is not cumulative of the art involved during examination. At this stage, Patent Owner does not dispute Petitioner's assertion that Robichaux teaches "(1) a torque controller, Pet. 40–42; (2) a torque producer including an estimator, *id.*, 43–45; (3) a comparator, *id.*, 45–46; and (4) a transient torque controller, *id.*, 51–54." Pet. Reply 7–8; *see generally* Sur-reply. Additionally, Patent Owner does not argue, and it is not readily apparent, that any of these disclosures of Robichaux are also taught by the admitted prior art. *See* Prelim. Resp. 11 (citing '565 patent column 1, lines 36–45 as "constitut[ing] the 'admitted prior art' of the '565 patent"); *see generally* Sur-reply. The admitted prior art discusses adjusting spark timing and fuel timing during stratified combustion and homogeneous combustion operation (Ex. 1001, 1:36–45), but it is not clear that it discusses any of the things listed by Petitioner as disclosed in Robichaux. For example, Patent Owner does not provide any persuasive evidence or explanation that the admitted prior art teaches an "estimator" or "comparator." *See generally* Prelim. Resp.; Sur-reply. Nor does Patent Owner assert that Scherer teaches the claimed "estimator" or "comparator." *See generally* Prelim. Resp.; Sur-reply.

Regarding *Becton, Dickinson* factor (d), there appears to be no overlap between the arguments presented by Petitioner and arguments made during examination. The '980 application received a first-action allowance with no explanation of any reasons for allowance. Ex. 1002, 49–50.

For the above reasons, we determine that the same or substantially the same art or arguments were not previously presented to the Office, and we need not consider the second part of the *Advanced Bionics* framework. Accordingly, we decline to exercise our discretion under 35 U.S.C. § 325(d) to deny the Petition.

E. Alleged Obviousness of Claims 1 and 7 over Robichaux and Scherer

1. Overview of Robichaux

Robichaux relates to controlling engine torque. Ex. 1020 ¶ 1. Figure 1 of Robichaux is reproduced below.

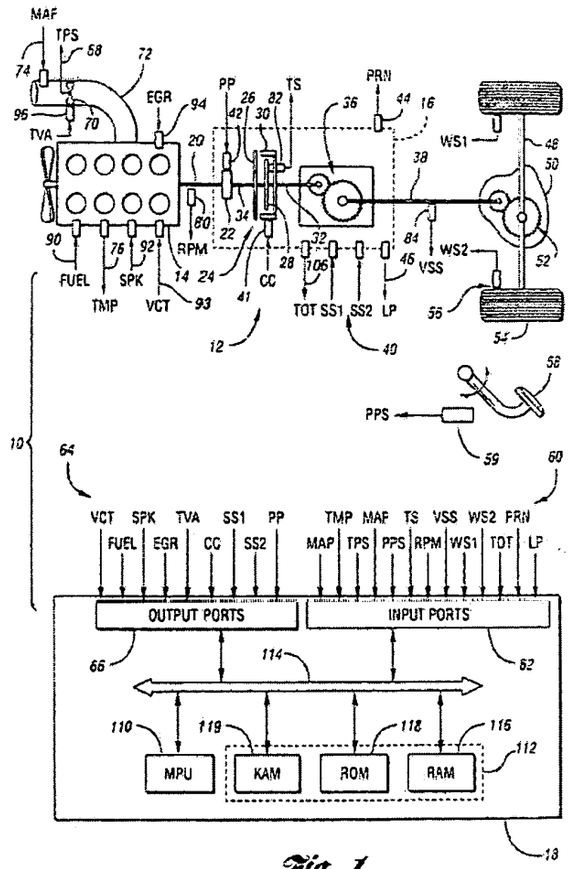

Fig. 1

Figure 1, "a block diagram illustrating a system and method for controlling engine torque," shows system 10, which includes vehicular powertrain 12. *Id.* ¶¶ 10, 12.

Powertrain 12 includes internal combustion engine 14 connected to automatic transmission 16. *Id.* ¶ 12. Transmission 16 includes output shaft 38, which connects to one or more axles 48 through final drive reduction or differential 50. *Id.* ¶¶ 13–14.

Powertrain 12 also includes controller 18 "in communication with engine 14 and transmission 16 for providing various information and control functions," as well as sensors 60 communicating with controller 18. *Id.*

¶¶ 12, 15. Sensors 60 include throttle valve position sensor (TPS) 68, mass airflow sensor (MAF) 74, temperature sensor (TMP) 76, engine speed sensor (RPM) 80, and certain other sensors. *Id.* ¶¶ 15–16. Pedal position sensor 59 indicates the position of accelerator pedal 58. *Id.* ¶ 19.

Powertrain 12 also includes actuators 64 linked to controller 18 "to provide control signals or to effect movement of various devices in powertrain 12." *Id.* ¶¶ 15, 20. Robichaux explains that

> [a]ctuators 64 may include actuators for timing and metering fuel (FUEL) 90, controlling ignition angle or timing (SPK) 92, controlling intake/exhaust valve actuators 93 (VCT) to implement variable cam timing ,setting the amount of exhaust gas recirculation (EGR) 94, and adjusting the intake air using throttle valve 70 with an appropriate servomotor or actuator (TVA) 96.

Id. ¶ 20.

Robichaux discusses a control architecture in connection with Figure 2, which is reproduced below.

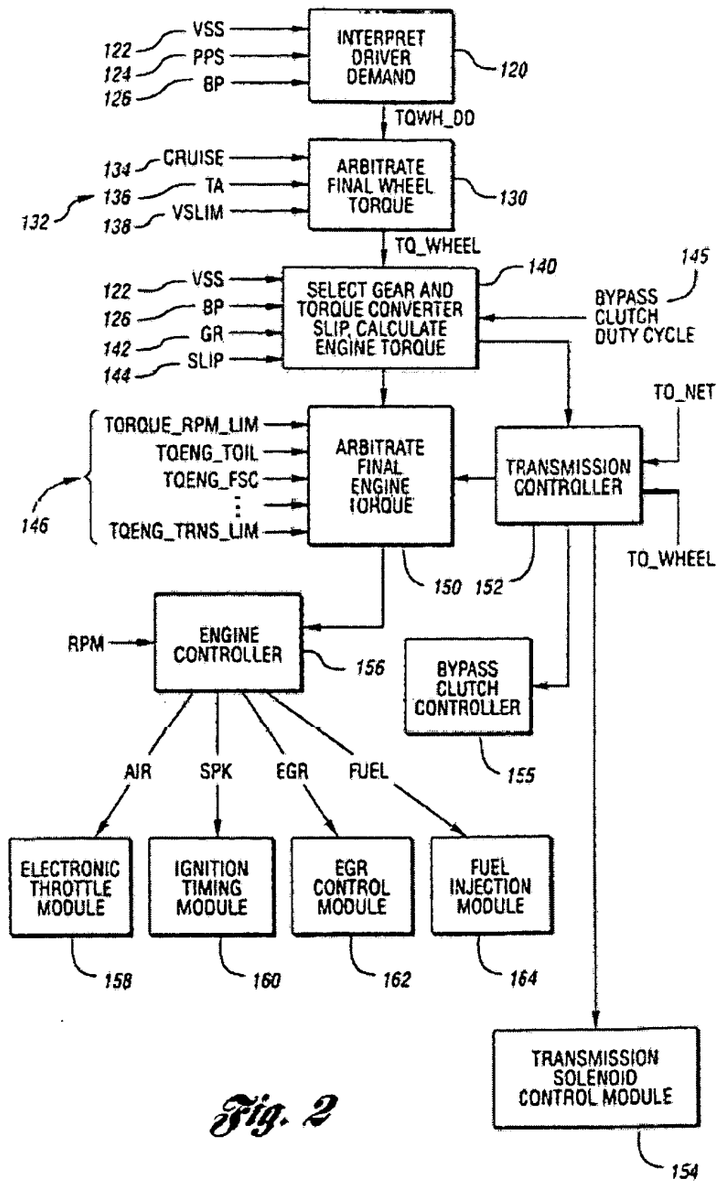

Fig. 2

"Figure 2 is a block diagram illustrating an output torque based powertrain control strategy including determination of a desired engine torque." *Id.* ¶ 10.

At block 120, "a driver demand is interpreted . . . based on vehicle speed 122 accelerator pedal position 124 and barometric pressure 126." *Id.* ¶ 23. The driver demand is received by input block 130 as a wheel torque (TQWH_DD). *Id.* A final wheel torque is arbitrated by block 130 from the wheel torque TQWH_DD and various other torque requesters, including "a cruise control torque 134, a traction assist torque 136, and/or a vehicle speed limiting torque 138." *Id.*

Block 140 receives the resulting final wheel torque (TQ_WHEEL) from block 130. *Id.* Based on the final wheel torque and certain other factors, block 140 determines a desired engine brake torque. *Id.*

At block 150, the requested engine torque is arbitrated with certain engine torque limiting functions 146. *Id.* ¶ 24. Block 150 transmits a final desired engine brake torque to engine controller 156, which "modifies the desired engine brake torque based on current engine operating conditions to determine a requested engine brake torque prior to determination of control parameters such as air flow, spark, EGR, and fuel as represented by blocks 158, 160, 162, and 164, respectively." *Id.* ¶ 25.

Robichaux illustrates engine controller 156 in Figure 3, which is reproduced below.

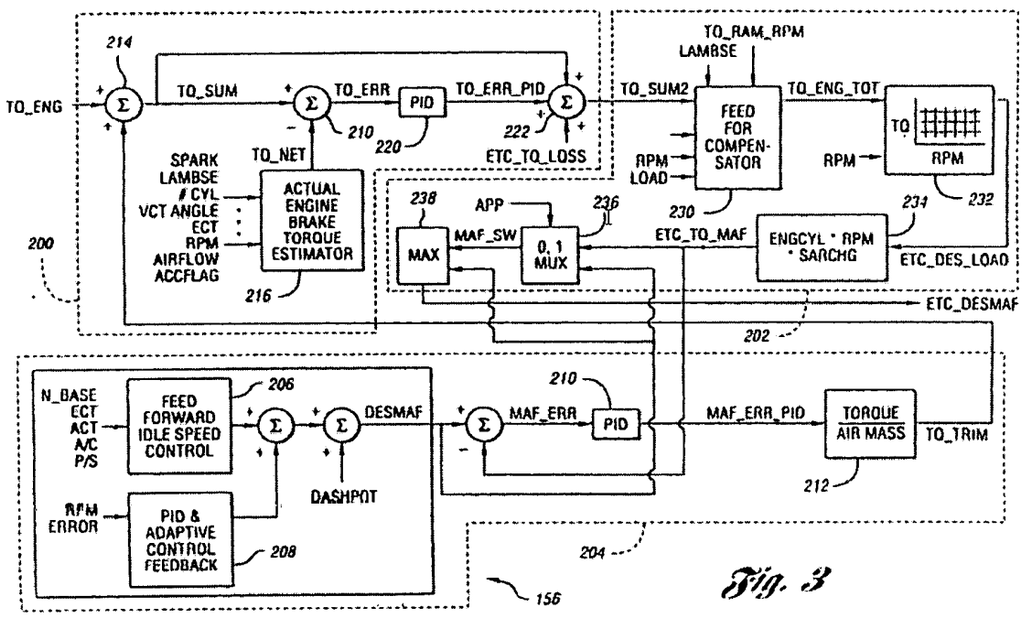

Fig. 3

Figure 3 is a block diagram illustrating engine controller 156 with its three functional sections "represented generally by reference numerals 200, 202, and 204." *Id.* ¶ 27.

A desired engine brake torque (TQ_ENG) is input to block 200. *Id.* Block 200 generates a requested engine brake torque (TQ_SUM2) by adjusting the desired engine brake torque. *Id.*

Block 202 receives requested engine brake torque TQ_SUM2 from block 200. *Id.* Based on requested engine brake torque TQ_SUM2, block 200 controls one or more engine operating parameters to produce the desired engine brake torque. *Id.*

Block 204 has "an airflow-based idle speed controller." *Id.* This "generates an idle speed torque determined at least in part based on a desired engine speed, preferably stored in a lookup table." *Id.*

In block 200, "the desired engine brake torque (TQ_ENG) is adjusted or modified first by combining the desired engine brake torque with an idle speed torque (TQ_TRIM) to generate a first intermediate torque (TQ_SUM) according to: TQ_SUM = TQ_ENG + TQ_TRIM." *Id.* ¶ 29. Block 216 generates an actual engine brake torque (TQ_NET). *Id.* ¶ 30. This may be a measured or estimated value. *Id.* ¶ 31. Block 218 compares first intermediate torque TQ_SUM to actual engine brake torque (TQ_NET) "to generate a torque error (second intermediate torque) according to: TQ_ERROR = TQ_SUM – TQ_NET." *Id.* ¶ 30.[3]

Based on second intermediate torque TQ_ERROR, PID controller 220 produces a feedback correction torque (TQ_PID). *Id.* ¶¶ 31, 34. Feedback correction torque TQ_PID "is provided to a summing block 222 where it is combined with the first intermediate torque and a third intermediate torque (ETC_ TQ_LOSS) to determine the final requested engine brake torque according to: TQ_ENG_DES = TQ_SUM + TQ_PID + ETC_ TQ_LOSS." *Id.* ¶ 34. "Preferably, controller 220 includes proportional, integral, and derivative terms but is not active during certain transient torque limiting control modes, which may include idle speed control, dashpot, engine speed limiting, traction assist, transmission gear shifting, and fail safe cooling, among others." *Id.* ¶ 32.

---

[3] In paragraph 30, "block 218" appears to refer to the item identified with reference number 210 inside block 200 of Figure 3. The instance of reference number 210 inside block 200 of Figure 3 seems to be a typographical error, given that another instance of reference number 210 appears in block 204 of Figure 3. Based on the text of Robichaux, it appears that the item labeled with reference number 210 within block 200 was intended to be labeled with reference number 218.

"The output of block 222 is then the requested final engine brake torque which is provided to section 202 to control the engine output." *Id.* ¶ 35. Airflow constitutes the principal control parameter, and fuel flow may also be adjusted to control torque output. *Id.*

Robichaux discusses control logic of one embodiment in connection with Figure 4, which is reproduced below.

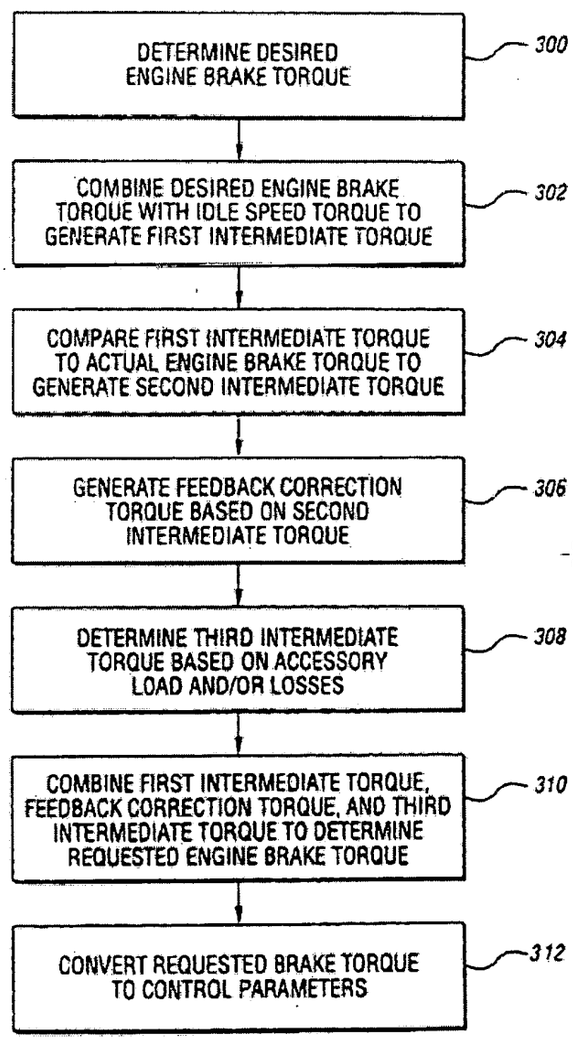

Fig. 4

Figure 4 is a flowchart illustrating "one 'loop'" of control logic of a method or system. *Id.* ¶ 43.

In block 300, desired engine brake torque is determined. *Id.* ¶ 44. To do so, various approaches may be used. *Id.* Preferably, accelerator pedal position, vehicle speed, and barometric pressure factor into the determination of desired engine brake torque. *Id.*

In blocks 302–308, the desired engine brake torque is adjusted based on current operating conditions to produce a requested engine brake torque. *Id.* The desired engine brake torque is combined with an idle speed torque at block 302 to produce a first intermediate torque. *Id.* ¶ 45. Block 304 compares the first intermediate torque to the actual engine brake torque, thereby producing a second intermediate torque. *Id.* In block 306, a feedback correction torque is produced based on the second intermediate torque. *Id.* ¶ 46. "Preferably, a proportional-integral-derivative (PID) controller is used to generate the feedback correction torque." *Id.* In block 308, engine frictional losses and/or accessory loads are used to ascertain a third intermediate torque. *Id.* ¶ 47.

"Blocks 310-312 represent controlling at least one of the operating parameters of the engine based on the requested engine brake torque to deliver the desired engine brake torque." *Id.* ¶ 44. In block 310, the requested engine brake torque is determined by combining "[t]he first intermediate torque, feedback correction torque, and third intermediate torque." *Id.* ¶ 48. In block 312, the compensated requested engine brake torque "is converted to appropriate control parameters to control the engine." *Id.* "The control parameters may include airflow, fuel, ignition angle

(spark), CAM timing, and the like, depending upon the particular application." *Id.*

2. *Overview of Scherer*

Scherer discloses an apparatus and method for controlling an internal combustion engine's torque. Ex. 1007, 1:7–11. Scherer discusses one embodiment in connection with Figure 1, which is reproduced below.

Fig. 1

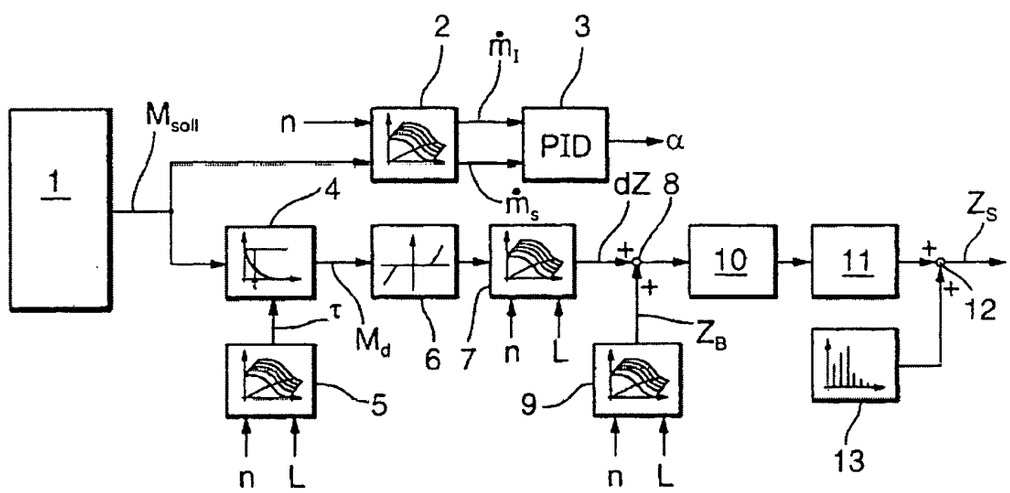

Figure 1 is a block diagram of a device for adjusting engine torque of an Otto engine. *Id.* at 3:30–31.

The device of Figure 1 includes engine torque coordination unit 1, an "airflow regulating branch," and a parallel "ignition point adjusting branch." *Id.* at 3:60–63, 4:20–23. Engine torque coordination unit 1 "provides a signal indicative, for example, of the desired engine torque (M_{des}) requested by the driver via the accelerator pedal."[4] *Id.* at 3:61–63. The airflow

[4] The signal referred to as M_{des} in the text appears to be labeled M_{soll} in Figure 1.

regulating branch includes input-side air flow rate calculating unit 2 and adjoining PID air flow ratc rcgulator 3. *Id.* at 3:67–4:2. The ignition point adjusting branch includes high pass filter 4 with characteristic time constant diagram unit 5. *Id.* at 4:20–35. The ignition point adjusting branch also includes input-side dead zone unit 6, unit 7, adder 8, ignition point calculating unit 9, unit 10, unit 11, adder 12, and conventional knock regulating stage 13. *Id.* at 4:53–5:5.

Air flow rate calculating unit 2 of the airflow regulating branch receives demanded desired engine torque M_{des} and the momentary rotational engine speed (n). *Id.* at 4:2–5. Based on these inputs and a stored characteristics diagram, air flow rate calculating unit 2 calculates a desired air flow rate value (m_s). *Id.* at 4:2–7. The actual air flow rate value (m_I) is also detected by air flow rate calculating unit 2 via an associated sensor system. *Id.* at 4:8–10.

PID air flow regulator 3 receives both the desired air flow rate value m_s and the actual air flow rate value m_I. *Id.* at 4:8–12. Based on these values, PID air flow regulator 3 identifies "a suitable control signal (α) for an air-flow regulating throttle valve." *Id.* at 4:8–13. Scherer explains that

> As is well known, because of the finite throttle valve adjusting speed and mainly because of the suction pipe filling characteristics, engine torque cannot be adjusted in this manner to follow a highly dynamic desired engine torque change without a noticeable sluggishness. That is, it can adjust only a quasi-static desired engine torque part.

Id. at 4:13–19.

Given this, Scherer relies on the ignition point adjusting branch "to adjust the dynamic desired torque component which exceeds this quasi-static part." *Id.* at 4:20–22. Scherer uses the ignition point adjusting branch

> only to adjust specifically that dynamic desired torque component which cannot be regulated by the air-flow-regulating branch. The high pass filter stage, which precisely determines this dynamic desired torque component (M_d), consists of a high pass filter 4 with an adjustable decay time constant (τ), and a characteristic time constant diagram unit 5.

Id. at 4:28–35.

High pass filter 4 transmits the dynamic desired torque component M_d to input-side dead zone unit 6, and the ignition point adjusting branch uses the dynamic desired torque component M_d and various other factors to generate an adjusting signal (Z_S) for the ignition point adjustment, which is output from adder 12. *Id.* at 4:53–5:6. Scherer explains that "[t]he ignition point adjusting branch is able to react very rapidly to sudden changes of the engine torque." *Id.* at 4:23–25.

Scherer discusses other variations of its system in connection with Figures 2–4. For example, in connection with Figure 2, Scherer discusses a system similar to that of Figure 1 but adapted for a diesel engine. *Id.* at 5:16–18. In this embodiment, "instead of an air flow regulating device, a device for adjusting the fuel injection duration is provided." *Id.* at 5:23–24. Additionally, "[i]nstead of the ignition point adjusting branch of the device of Fig. 1, the device of Fig. 2 contains an injection start adjusting branch." *Id.* at 5:35–37.

3. Discussion

Petitioner asserts that Robichaux and Scherer, in combination, teach all of the limitations of claims 1 and 7. Pet. 36–57. Petitioner cites Robichaux as teaching most of the limitations of claims 1 and 7. *Id.* For example, Petitioner asserts that Robichaux teaches "a device for controlling

a torque output of an engine"[5] having a "torque demand controller for generating a torque demand signal," as recited in claim 1. *Id.* at 36–40. Additionally, Petitioner asserts that Robichaux teaches "a torque producer which receives the torque demand signal," as recited in claim 1. *Id.* at 40–42. Petitioner also asserts that the torque producer taught by Robichaux includes "an estimator" and "a comparator," as recited in claim 1. *Id.* at 43–46. Petitioner cites Robichaux's block 216 as corresponding to the claimed "estimator." *Id.* at 43–45. Regarding claim 1's "comparator which receives as inputs the estimated torque signal and a desired torque signal and outputs a difference signal," the Petition explains that

> Robichaux discloses the recited comparator. EX1003, ¶105. Robichaux's summing junction 214 adjusts the desired engine brake torque TQ_ENG from block 150 (Figure 2) by adding an idle speed torque TQ_TRIM to generate a first intermediate torque TQ_SUM. EX1020, ¶0029, FIG. 3; EX1003, ¶105. Block 218 receives the TQ_SUM torque signal, compares this signal to the actual engine brake torque TQ_NET signal ("estimated torque signal") estimated by block 216, and produces a torque error TQ_ERROR. EX1020, ¶0030, FIG. 3; EX1003, ¶105. The generated torque error TQ_ERROR is a "difference signal," representing the difference between the estimated actual engine brake torque TQ_NET and the desired engine brake torque TQ_ENG. EX1003, ¶105.

Id. at 45.

Petitioner asserts that Robichaux and Scherer render obvious claim 1's "high pass filter which receives as an input the difference signal in which low frequency components are absent." *Id.* at 30–36, 47–50, 56–57.

---

[5] At this stage, we need not address whether claim 1's preamble is limiting, as Petitioner has shown adequately, for purposes of institution, that the preamble is satisfied by Robichaux.

Petitioner asserts that Scherer's "control system includes a transient control branch having a high-pass filter 4 that isolates the dynamic desired torque component (M_d) of the desired torque signal M_{des}."[6] *Id.* at 47. Petitioner asserts that "[a person of ordinary skill in the art] would have been motivated to incorporate Scherer's transient torque control system, including high-pass filter 4, into Robichaux's engine controller to control torque during transient conditions." *Id.* at 49. Petitioner contends that a person of ordinary skill in the art would have had a reasonable expectation of success in implementing a combination in which "Robichaux's torque signal TQ_ERR would be transmitted to Scherer's transient control branch instead of Robichaux's PID controller 220, and Scherer's high-pass filter 4 would then output a filtered difference signal with low-frequency components removed." *Id.* at 50.

In support of its position that a person of ordinary skill in the art would have been motivated to so combine the references' teachings, Petitioner asserts that

> Robichaux's proportional-integral-derivative (PID) controller 220 processes the torque error signal during steady-state conditions. EX1003, ¶85; EX1020, ¶0032. Robichaux's PID controller "is not active during certain transient torque limiting control modes." EX1020, ¶0032; EX1003, ¶¶86-87. Accordingly, Robichaux invited combinations with references disclosing transient control functionality to process the torque demand signal during transient conditions. EX1003, ¶87.

Id. at 32. According to Petitioner, Scherer's transient control branch and high pass filter 4 "[r]emoving the desired torque signal's low-frequency

[6] In the case of Scherer's Figure 1 embodiment, Petitioner's discussion of "a transient control branch" refers to Scherer's ignition point adjusting branch.

component allows Scherer's controller to 'react very rapidly to sudden changes of the engine torque,' arising during transient enginc operations." *Id.* at 33. In view of this, Petitioner argues that a person of ordinary skill in the art would have been motivated to add Scherer's transient control branch to Robichaux's system "[t]o address dynamic torque changes in Robichaux's system." *Id.* at 34. Petitioner argues that "[c]ombining Scherer's transient control branch with Robichaux's controller would have merely been applying a known technique (Scherer's transient control) in a similar, known device (Robichaux's controller) in the same way." *Id.*

This allegedly obvious combination of the references' teachings would also have claim 1's "transient torque controller," Petitioner contends. *Id.* at 51–54. Petitioner explains that Scherer's transient control system has certain units other than high pass filter 4 for adjusting torque output. *Id.*

Regarding claim 7, Petitioner relies on substantially the same reasoning that it allegedly would have been obvious to combine the teachings of Robichaux and Scherer. *Id.* at 30–36, 54–57. Petitioner asserts that combining Scherer's transient torque control system with Robichaux's system would have resulted in a method meeting all of the limitations of claim 7. *Id.* at 54–57.

Patent Owner argues that "[a person of ordinary skill in the art] would not consider combining *Scherer* with *Robichaux* because they teach away from each other and from the challenged claims of the '565 patent." Prelim. Resp. 20. Patent Owner elaborates that "the inventors of these prior art references were inarguably at least [persons of ordinary skill in the art] but did not themselves think to combine the individually known elements to arrive at the combination." *Id.* Patent Owner contends this "is itself the

best, most objective, and most contemporaneous evidence of non-obviousness of the claimed invention set forth and patentably defined in the challenged claims of the '565 patent." *Id.* Patent Owner faults Petitioner's obviousness assertions on the basis that "a proper prior art analysis would explain where the references themselves provide the teaching, motivation or suggestion to combine their teachings." *Id.* at 22.

Patent Owner also argues that Petitioner's obviousness contentions derive from improper hindsight. *Id.* at 22–26. Patent Owner argues that each of the references cited by Petitioner fails to "disclose a key element of the challenged claims of the '565 patent, namely, 'a high pass filter which receives as input the difference signal and outputs a filtered difference signal in which low frequency components are absent.'" *Id.* at 23. Patent Owner explains that Robichaux does not teach a high pass filter, and Scherer's high pass filter 4 "receives a desired engine torque signal and outputs a dynamic torque component." *Id.* at 25. Patent Owner concludes that "[c]ombining these two prior art references, even in hindsight, would result in a desired engine torque signal which is high-pass filtered, and a 'difference signal' which is not high-pass filtered." *Id.* at 26.

Additionally, Patent Owner argues "*Scherer* does not disclose a stratified charge operation mode for a DISI engine as the '565 patent discloses and claims." Prelim. Resp. 4.

Petitioner argues that Patent Owner's observation that neither Robichaux nor Scherer teaches a high pass filter applied to a difference improperly attacks the teachings of the references individually. Pet. Reply 2–3. In combination, not individually, Robichaux and Scherer render

obvious applying a high pass filter to a difference signal, Petitioner emphasizes. *Id.*

Petitioner also argues that the references do not teach away. *Id.* at 4–5. Petitioner argues that for a reference to teach away, it must "criticize, discredit, or otherwise discourage the solution claimed." *Id.* at 4 (quoting *In re Fulton*, 391 F.3d 1195, 1201 (Fed. Cir. 2004)). Under this test, Petitioner asserts that Patent Owner does not identify any way in which the cited references teach away from the claimed invention of the '565 patent.

Additionally, Petitioner argues that the Supreme Court rejected Patent Owner's rigid understanding of the teaching, suggestion, or motivation test. Pet. Reply 6 (citing *KSR Int'l Co. v. Teleflex Inc.*, 550 U.S. 398, 418 (2007)).

In response, Patent Owner reiterates that neither Robichaux nor Scherer teaches high pass filtering a difference signal. Sur-reply 2–4. Patent Owner argues that if a person of ordinary skill in the art had considered combining the references' teachings, "the [person of ordinary skill in the art] would have been taught to 'high-pass filter' an input to a comparator that outputs a 'difference signal,' rather than filtering the 'difference signal.'" *Id.* at 3.

Weighing the parties' arguments and evidence, at this stage, we determine Petitioner has demonstrated a reasonable likelihood of prevailing on its assertion that claims 1 and 7 would have been obvious in view of Robichaux and Scherer. Petitioner identifies reasons associated with the references' teachings that a person of ordinary skill in the art would have for adding Scherer's transient torque controller to Robichaux's system. Specifically, Petitioner explains that Scherer teaches transient torque control provisions with high pass filter 4, and Robichaux indicates a need during

transient conditions to provide the torque error TQ_ERROR of block 218 to transient control provisions like those of Scherer. Pet. 32–34, 47 50. Patent Owner does not dispute Petitioner's contention that Robichaux indicates a need for transient torque control in lieu of PID controller 220 during transient conditions. Pet. 32, 47; *see generally* Prelim. Resp.; Sur-reply. Nor does Patent Owner dispute Petitioner's contention that Scherer indicates its transient control branch, with its high pass filter 4, provides effective transient torque control in transient circumstances. Pet. 33, 47–49; *see generally* Prelim. Resp.; Sur-reply. At this stage, Petitioner has shown sufficiently that a person of ordinary skill in the art would have had a reason to add Scherer's transient control branch with its high-pass filter 4 to Robichaux's system.

Specifically, Petitioner shows sufficiently that a person of ordinary skill in the art would have had reason to modify Robichaux's system to send the torque error TQ_ERROR from block 218 to high pass filter 4 of Scherer's transient control branch, so that the transient torque control branch can respond to the transient circumstance in lieu of Robichaux's PID controller 220. Pet. 32–34, 47–50. It appears that such a combination of the references' teachings would have claim 1's "high pass filter which receives as an input the difference signal and outputs a filtered difference signal in which low frequency components are absent." Similarly, such a combination of the references' teachings apparently would include claim 7's step of "filtering out a plurality of low frequency components from the difference signal."

At this stage, we do not agree with Patent Owner's arguments that the references teach away. Patent Owner's observation that the prior art

references' inventors did not teach expressly the invention recited in the claims of the '565 patent does not establish teaching away, as it does not demonstrate that the references criticize, discredit, or otherwise discourage use of the invention recited in the claims of the '565 patent. *See in re Fulton*, 391 F.3d 1195, 1201 (Fed. Cir. 2004). Nor do any of Patent Owner's other arguments demonstrate that the references teach away.

Additionally, at this stage, we do not agree with Patent Owner that Petitioner's arguments stem from improper hindsight. As explained above, Petitioner cites Scherer's express disclosure of advantages associated with its transient control branch (including its high pass filter 4) and Robichaux's indication of a need for additional transient control provisions as disclosures of the cited references that would have provided a reason to combine the references' teachings.[7] Pet. 32–34, 47–50; Pet. Reply 6. Petitioner's arguments sufficiently support its assertion that it would have been obvious to combine the references' teachings by sending the torque error TQ_ERROR from block 218 of Robichaux's system to high pass filter 4 of Scherer's transient control branch. Patent Owner's emphasis that Scherer teaches sending a desired engine torque signal to high pass filter 4 may support a conclusion that another obvious combination of the references' teachings would involve high pass filtering a desired engine torque signal.

---

[7] To the extent Petitioner's obviousness contentions do not rest entirely on express motivations from the references, we agree with Petitioner that Patent Owner misunderstands the law on obviousness when arguing that Petitioner has to show "the references themselves provide the teaching, motivation or suggestion to combine their teachings." *See KSR*, 550 U.S. at 417 (explaining that an obviousness "analysis need not seek out precise teachings directed to the specific subject matter of the challenged claim.").

But, at this stage, it does not persuade us that the only possible obvious combination of the references' teachings would have been high pass filtering a desired engine torque signal. *See Dome Patent L.P. v. Lee*, 799 F.3d 1372, 1381 (Fed. Cir. 2015) (noting possibility of multiple obvious combinations of prior art).

We also find unpersuasive Patent Owner's argument that "*Scherer* does not disclose a stratified charge operation mode for a DISI engine as the '565 patent discloses and claims." Prelim. Resp. 4. This argument is not commensurate in scope with independent claims 1 and 7. Ex. 1001, 4:2–22, 4:54–65. Of the challenged claims, only claim 4 recites a stratified mode. *Id.* at 4:35–39. As discussed below in Section II.G.2, Petitioner relies on Suzuki as teaching stratified mode operation. Pet. 80–85.

For the foregoing reasons, we find Petitioner has demonstrated a reasonable likelihood of prevailing on its assertion that claims 1 and 7 would have been obvious over Robichaux and Scherer.

F. Alleged Obviousness of Claims 2 and 3 over Robichaux, Scherer, and Takahashi

1. Overview of Takahashi

Takahashi "is related to the method and system for simultaneous control of the throttle valve and fuel injection to ensure that the torque and air fuel ratio of the automobile engine will reach target values." Ex. 1008, 1:6–9.

Takahashi shows one embodiment of its "simultaneous torque and air fuel ratio control system" in Figure 2, which is reproduced below.

FIG. 2

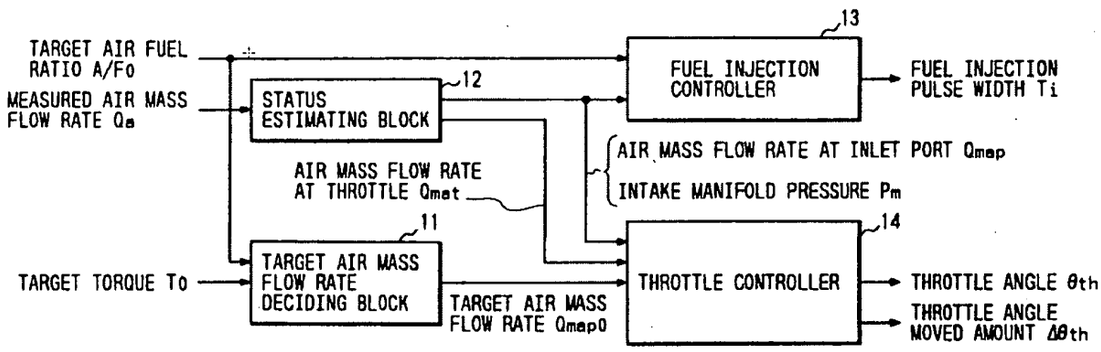

Figure 2 is a block diagram of simultaneous air fuel ratio and torque control with target air mass flow rate deciding block 11, status estimating block 12, fuel injection controller 13, and throttle controller 14.[8] *Id.* at 2:35–36, 3:16–29.

Target air mass flow rate deciding block 11 determines a target air mass flow rate based on target torque T_0, engine speed N, target air fuel ratio A/F_0, spark advance θ_{adv}, constant K, and specified functions F_1, F_2, F_3. *Id.* at 3:28–40.

Takahashi describes the operation of status estimating block 12 in more detail with reference to Figure 3, which is reproduced below.

[8] One portion of the text of Takahashi refers to "target air mass flow rate deciding block 15." Ex. 1008, 3:22–23. This appears to be a typographical error. It appears that the text should refer to "target air mass flow rate deciding block 11." In Figure 2, reference numeral 11 is used to identify "TARGET AIR MASS FLOW RATE DECIDING BLOCK 11." Additionally, another portion of the text of Takahashi states that "[b]lock 11 calculates the target air mass flow rate." *Id.* at 3:28.

FIG. 3

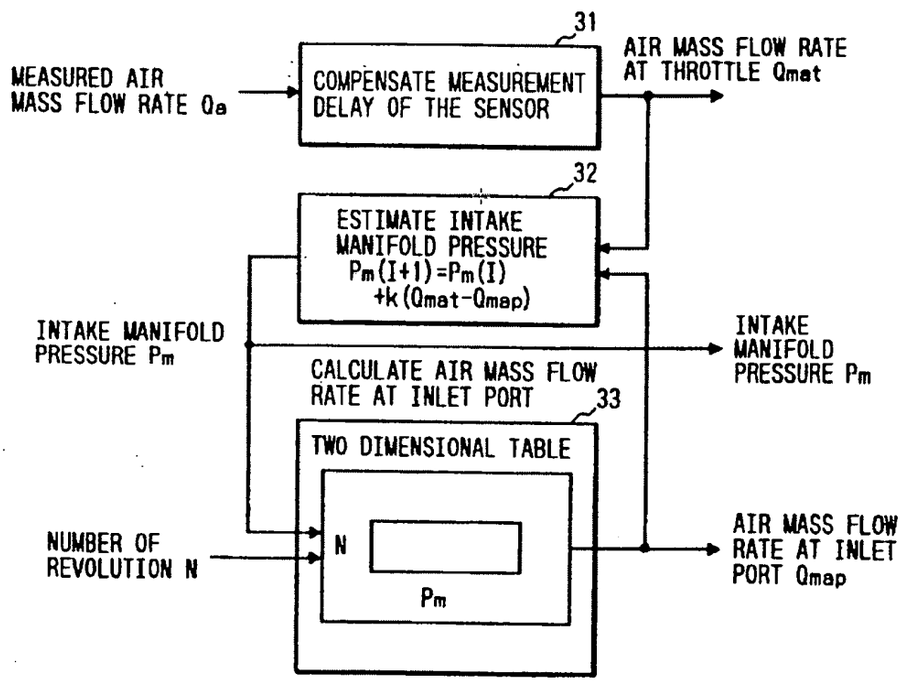

Figure 3 is a block diagram of the status estimating block, which includes blocks 31–33. *Id.* at 2:37–38, Fig. 3. Takahashi explains that

> In block 31, measured air mass flow rate Q_a is subjected to the response delay compensation for the air mass flow sensor. Namely, the air mass flow rate at throttle Q_{mat} is calculated and updated from measured air mass flow rate Q_a according to [an equation using certain variables].

Id. at 4:6–39. Takahashi also explains that

> In block 32, intake manifold pressure Pm calculated from the air mass flow rate at throttle Q_{mat} which is calculated in block 31, and air mass flow rate at inlet port Q_{map} which is calculated by searching the table 33 according to [an equation using certain variables].

Id. at 4:49–68. Takahashi further explains that "[b]lock 33 calculates the air mass flow rate at inlet port Q_{map} by searching the two dimensional

table for the intake manifold pressure and engine speed, where the data on air mass flow rate taken in during engine operation in the stationary status are stored." *Id.* at 5:1–5.

Takahashi discusses fuel injection control in greater detail in connection with Figure 4, which is reproduced below.

FIG. 4

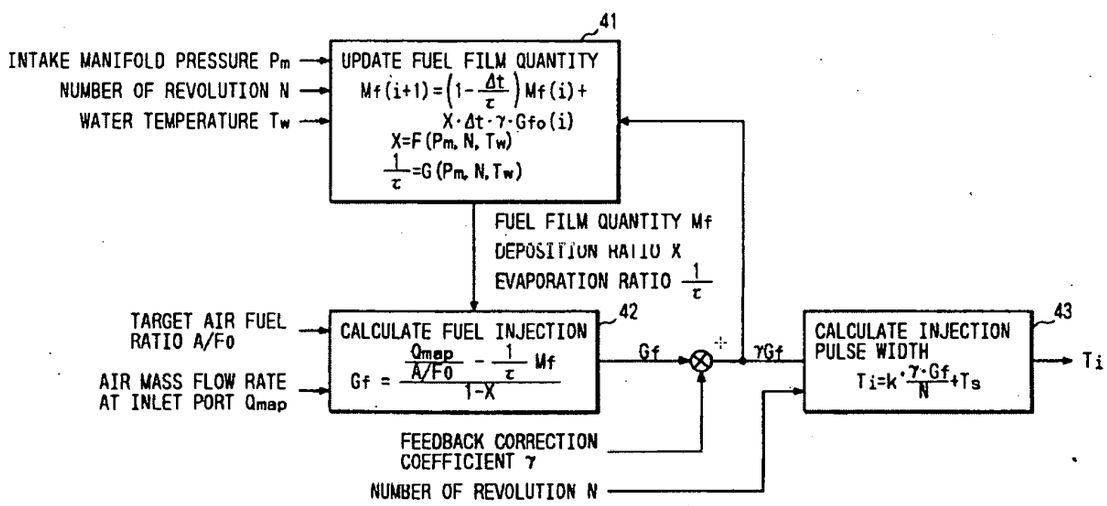

Figure 4 is a block diagram of the fuel injection control system, which includes blocks 41–43. *Id.* at 2:39–40, Fig. 4. Takahashi explains that "[b]lock 41 calculates the deposition ratio X of the injected fuel onto the intake manifold and evaporation ratio ($1/\tau$) of deposited fuel according to [certain expressions]." *Id.* at 5:12–15. Takahashi also explains that "block 42 calculates the fuel injection quantity using the value calculated in block 41 according to [a certain expression]." *Id.* at 5:53–55. Based on another

equation, the fuel injection pulse width Ti is calculated by block 43.[9] *Id.* at 5:66–6:9.

Takahashi discusses throttle control in greater detail with reference to Figure 5, which is reproduced below.

FIG. 5

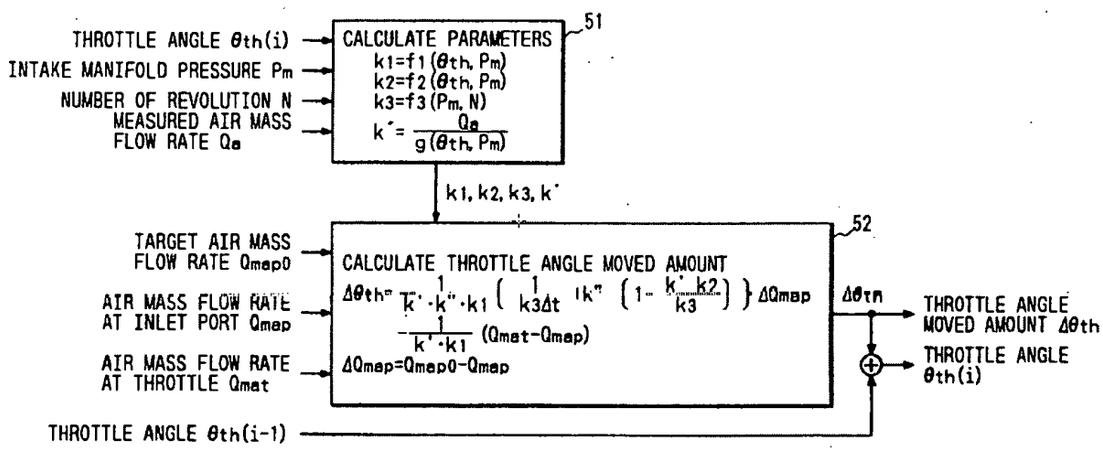

Figure 5 is a block diagram of the throttle control system, which includes blocks 51 and 52. *Id.* at 2:41–42; Fig. 5. Takahashi explains that "[b]lock 51 calculates the said various parameters. In block 52, throttle angle moved amount $\Delta\theta_{th}$ is calculated from the calculated parameters. Further, throttle angle move amount $\Delta\theta_{th}$ is added to the throttle angle θ_{th} (i – 1) one time unit before, thereby calculating the current throttle angle θ(i)." *Id.* at 7:62–68.

Takahashi discusses another embodiment "which detects the air mass flow rate indirectly from the measured intake manifold pressure." *Id.* at

[99] Although the text states that "[b]lock 42 calculates the fuel injection pulse width Ti," this appears to be a typographical error, given that block 43 in Figure 4 includes the text "CALCULATE INJECTION PULSE WIDTH."

10:32–35. In connection with this disclosure, Takahashi presents Figure 14, which is reproduced below. *Id.* at 10:42–44.

FIG. 14

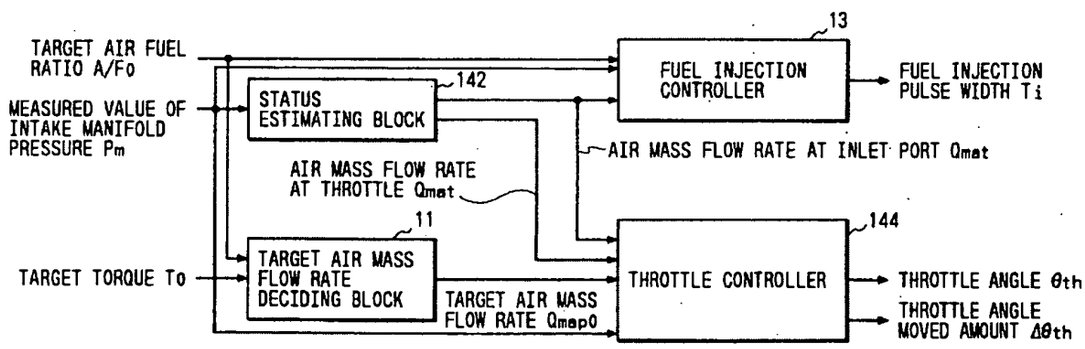

Figure 14 "is a block diagram of simultaneously controlling air-fuel ratio and torque, in said engine control system having a pressure sensor." *Id.* at 2:62–64. Takahashi explains that "[t]he target air fuel ratio, target torque and intake manifold pressure are input as major input signals, thereby calculating the fuel injection pulse, throttle angle and throttle angle moved amount." *Id.* at 10:44–47. In connection with this embodiment, Takahashi further discusses the status estimating block in more detail in connection with Figure 15, which is reproduced below.

FIG. 15

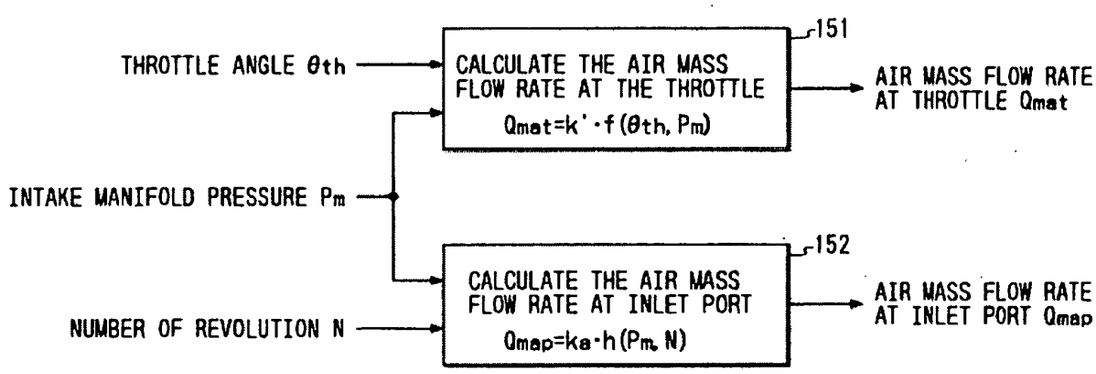

Figure 15 "is a block diagram of the status estimating block in FIG. 14." *Id.* at 2:65–66. Takahashi explains that

> Block 151 calculates the air mass flow rate at the throttle from the throttle angle and detected intake manifold pressure according to the Expression 12. Block 152 calculates the air mass flow rate at the inlet port from the intake manifold pressure and the detected engine speed according to [a certain expression].

Id. at 10:51–57.

2. Discussion

Claim 2 depends from claim 1, and claim 3 depends from claim 2. Ex. 1001, 4:23–28. In addition to the limitations of independent claim 1, claim 2 recites "wherein the estimated air charge signal is produced by an air charge controller which receives as inputs an air charge demand signal, a throttle position signal, an engine speed signal, a manifold pressure signal and an air charge temperature signal." *Id.* at 4:23–26. Claim 3 adds that "the air charge demand signal is produced by an air charge demand

controller which receives as inputs the desired torque signal, a desired spark anglc signal and a desired air/fuel ratio." *Id.* at 4:27–30.[10]

Building on the challenge of claim 1 as obvious over Robichaux and Scherer, Petitioner cites Takahashi in combination with Robichaux and Scherer as teaching the limitations added by claims 2 and 3. Pet. 58–75. Petitioner cites Takahashi, for example, as teaching status estimating block 142 and throttle controller 144 (Figure 14), which Petitioner contends correspond to the "air charge controller" recited in claim 2. *Id.* at 67–71. Petitioner asserts that Takahashi teaches performing its engine control based on the specific parameters recited in claims 2 and 3. *Id.* at 65–75. Petitioner asserts that it would have been obvious to implement these aspects of Takahashi's teachings with the teachings of Robichaux and Scherer. *Id.* at 58–75. For example, Petitioner asserts that a person of ordinary skill in art would have pursued the control "details provided by Takahashi's air charge control unit for modifying Robichaux's analogous air charge controller because combining Takahashi's teachings with Robichaux and Scherer would have yielded predictable benefits and results—for example, precisely controlling the air mass flow rate at the inlet port of the engine cylinder." *Id.* at 63.

At this stage, Patent Owner does not dispute Petitioner's challenge of claims 2 and 3 as allegedly obvious over Robichaux, Scherer, and Takahashi separately from the challenge of independent claims 1 and 7 as allegedly obvious over Robichaux and Scherer. *See generally* Prelim. Resp.

---

[10] The Certificate of Correction on page 7 of Exhibit 1001 clarifies that the word "ratio" appears before the period.

Our review of Petitioner's arguments and evidence persuades us that Petitioner has demonstrated a reasonable likelihood of prevailing on its challenge of claims 2 and 3 as allegedly obvious over Robichaux, Scherer, and Takahashi.

G. Alleged Obviousness of Claim 4 over Robichaux, Scherer, and Suzuki

1. Overview of Suzuki

Suzuki "is directed to a control apparatus, or controller, for a direct-injection spark-ignition type engine." Ex. 1005, 2:52–53. Suzuki shows an exemplary engine in Figure 2, which is reproduced below.

FIG.2

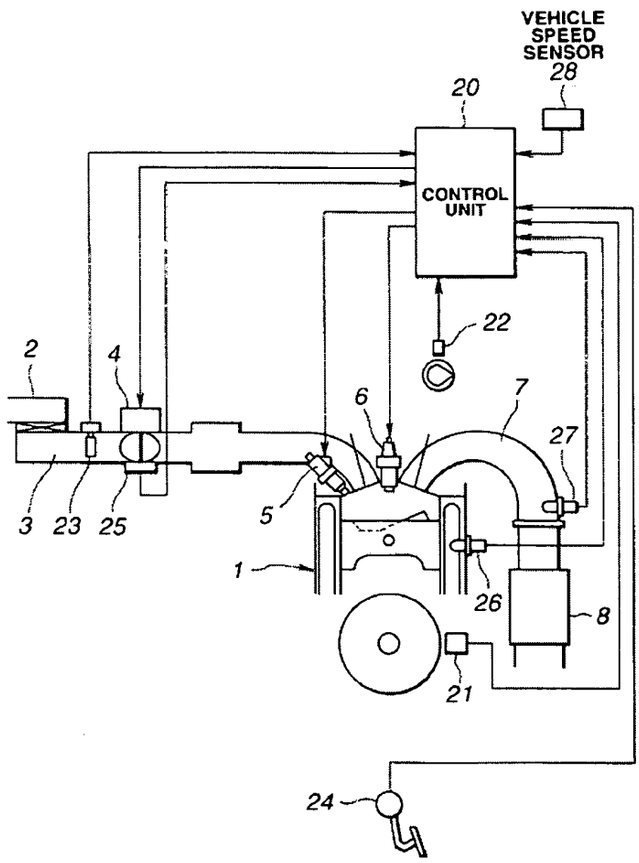

Figure 2 shows engine 1, which includes intake passage 3, throttle valve 4, fuel injector 5, spark plug 6, exhaust passage 7, controller 20, accelerator sensor 24, and various other components. *Id.* at 3:24–43, 3:61–4:5, 4:18–21.

Engine 1 is "a direct-injection spark-ignition engine." *Id.* at 3:23–24. Controller 20 controls throttle valve 4, which controls air intake through intake passage 3 into the combustion chamber. *Id.* at 3:24–31. In response to a signal from controller 20, fuel injector 5 injects fuel directly into the combustion chamber. *Id.* at 3:33–34. The fuel mixes with air in the combustion chamber, and spark plug 6 generates a spark to combust the mixture of fuel and air. *Id.* at 3:38–45. Exhaust gases leave the combustion chamber through exhaust passage 7. *Id.* at 3:62–63.

Fuel injector 5 can introduce fuel into the combustion chamber during the intake stroke or the compression stroke. *Id.* at 3:39–44. If fuel injector 5 injects fuel during the intake stroke, the fuel forms a homogeneous mixture with the air in the combustion chamber. *Id.* at 3:39–42. If fuel injector 5 injects fuel during the compression stroke, the fuel forms a stratified mixture with the air around spark plug 6. *Id.* at 3:42–44. "The combustion modes include homogenous stoichiometric combustion . . . , homogeneous lean combustion . . . , and stratified lean combustion." *Id.* at 3:46–50. Suzuki discusses provisions for switching between homogeneous and stratified combustion modes in connection with Figures 1(A) and 1(B), which are reproduced below.

FIG.1(A)

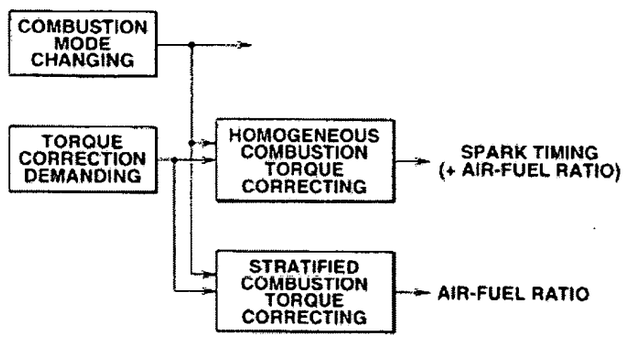

FIG.1(B)

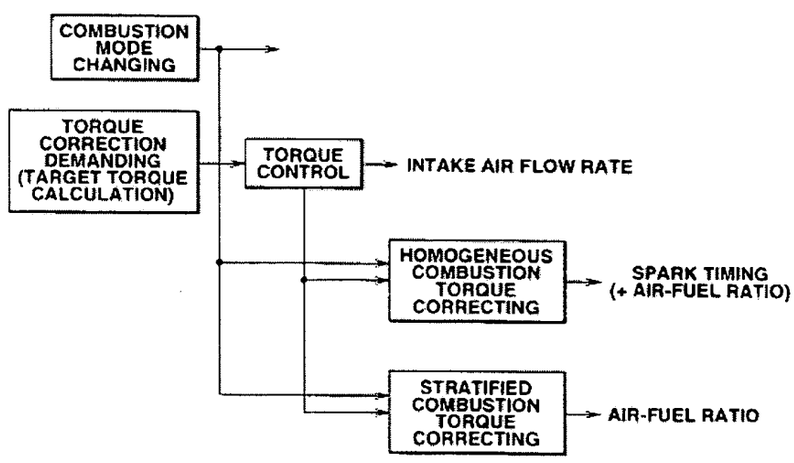

Figures 1(A) and 1(B) are "block diagrams showing the overall arrangement of the invention." *Id.* at 1:66–67.

In Figure 1(A), there is shown a combustion mode changing section, a torque correction demanding section, a homogeneous combustion torque correcting section, and a stratified combustion torque correcting section. *Id.* at 2:54–3:4. Combustion mode changing section serves to make "a combustion change between homogeneous combustion (wherein fuel is

injected during an intake stroke to diffuse the fuel so as to form a homogeneous mixture in the combustion chamber) and stratified combustion (wherein fuel is injected during a compression stroke to form a stratified mixture around the spark plug)." *Id.* at 2:55–61. The torque correction demanding section generates a torque correction demand according to engine operating conditions. *Id.* at 2:61–63. During homogeneous combustion, the homogeneous torque correcting section responds to the torque correction demand by "correcting at least the spark timing in order to make a torque correction during homogeneous combustion." *Id.* at 2:64–3:1. During stratified combustion, the stratified torque correcting section responds to the torque correction demand "and corrects at least the air-fuel ratio in order to make a torque correction." *Id.* at 3:1–3.

Another overall arrangement appears in Figure 1(B). *Id.* at 3:5. In addition to the sections of the arrangement of Figure 1(A), the arrangement of Figure 1(B) includes a torque control section, which responds "to the torque correction demand and controls the amount of air permitted to enter the engine in order to control the torque." *Id.* at 3:12–15. Suzuki explains that

> [b]ecause air intake cannot be changed rapidly, a homogenous combustion torque correcting section corrects at least the spark timing in order to make a torque correction with a fast response (compared with the delay associated with intake air flow rate control) during homogenous combustion. A stratified combustion torque correcting section corrects at least the air-fuel ratio to make torque correction during stratified combustion.

Id. at 3:15–22.

Suzuki discusses details of one method of correcting torque in connection with Figure 6, which is reproduced below.

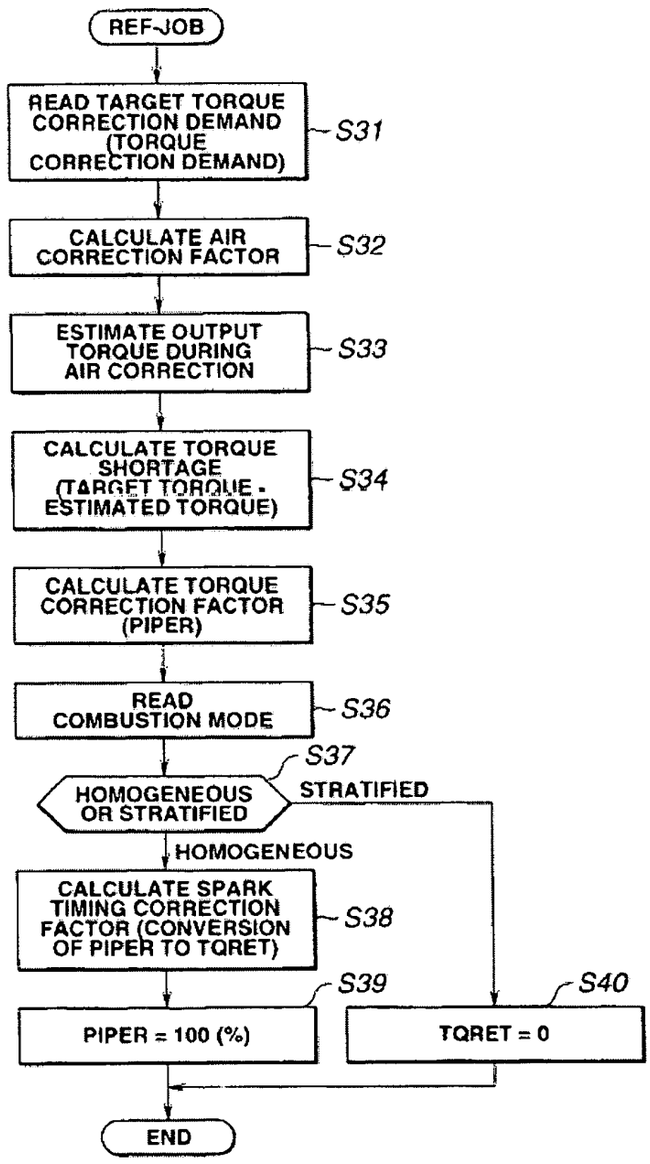

Figure 6 is a flow diagram illustrating "a torque correcting routine." *Id.* at 2:10–11, 7:11–12.

In step S31, "a target torque tTRQ calculated by torque demand control is retrieved. The parameter tTRQ includes a torque correction demand (demand for increasing or decreasing the torque) resulting from gear shifting of the transmission, turning on the air conditioner, recovery from a fuel cut, or the like." *Id.* at 7:14–19. Following this,

> [i]n step S32, an air correction factor to obtain the target torque (the torque correction demand) is calculated to control the degree of opening of the electronic controlled throttle valve 4.
>
> In step S33, the output torque during intake air correction is estimated.
>
> In step S34, the estimated torque is subtracted from the target torque (which is based on the torque demand control target torque or the torque correction demand calculated at step S31) to calculate the torque shortage due to the delay involved with changing the amount of intake air.

Id. at 7:29–39.

At step S36, the combustion mode is read and it is ascertained whether it is the homogeneous or stratified combustion mode. *Id.* at 7:45–50.

Depending on which combustion mode is active, in step S38 or step S40, different control parameters are set. *Id.* at 7:51–64. Subsequently, control proceeds according to a spark timing calculation routine and a fuel delivery requirement calculation routine. *Id.* at 7:65–67.

For the embodiment discussed in connection with Figure 6, Suzuki shows response waveforms in Figure 13, which is reproduced below.

FIG.13

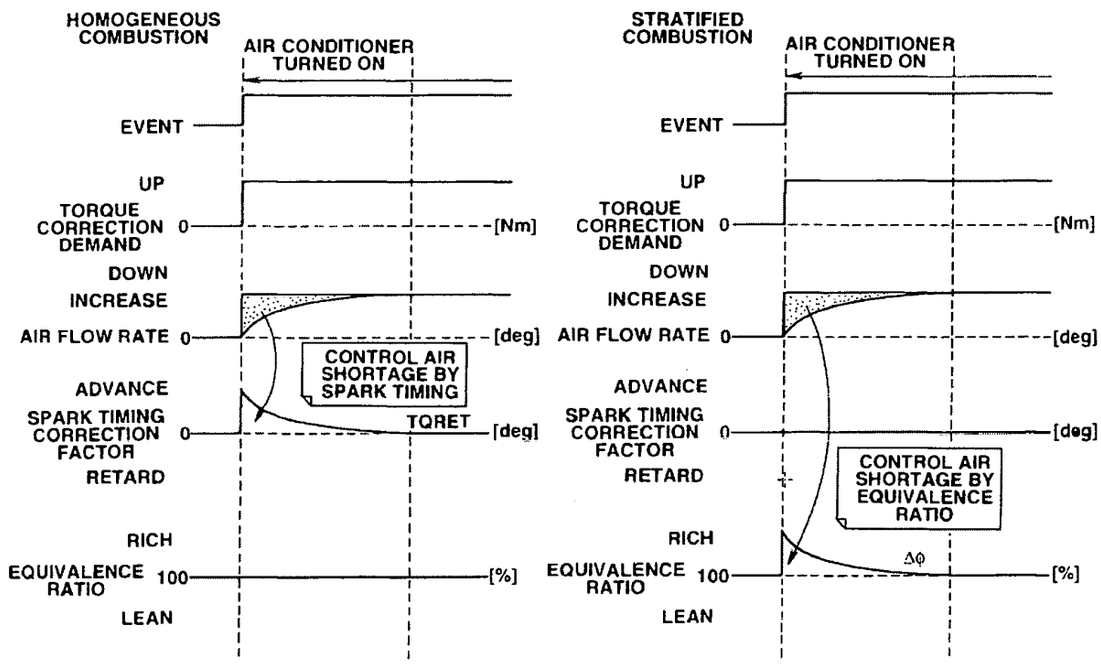

Figure 13 shows, for both homogeneous combustion and stratified combustion, variation in certain values, such as torque correction demand, air flow rate, spark timing correction factor, and equivalence ratio in response to activation of an air conditioner. *See id.*, Fig. 13. Suzuki explains that

> FIG. 13 shows response waveforms for the second embodiment. Assuming that a torque correction (torque up) demand is produced when the air conditioner is turned on, the amount of air to the engine increases; however, a torque shortage occurs because of the delay in increasing the actual amount of air to the engine. The spark timing is corrected to correct the torque shortage during homogeneous combustion and the equivalence ratio (air-fuel ratio) is corrected, without correcting the spark

> timing, to correct the torque shortage during stratified combustion.

Id. at 8:51–60.

2. Discussion

Claim 4 depends from claim 1. Ex. 1001, 4:31. In addition to the limitations of claim 1, claim 4 adds limitations related to "operating in a stratified mode or a homogeneous mode." Id. at 4:34–44.

Building from the challenge of claim 1 as allegedly obvious over Robichaux and Scherer, Petitioner asserts that the additional limitations of claim 4 would have been obvious over Suzuki in combination with Robichaux and Scherer. Pet. 75–89. Petitioner argues that it would have been obvious to implement certain of Suzuki's teachings regarding stratified combustion and homogeneous combustion with the teachings of Robichaux and Scherer. *Id.* Petitioner argues, for example, that "a [person of ordinary skill in the art would have been motivated to modify Robichaux's engine controller to incorporate Suzuki's dual-combustion-mode control to improve fuel efficiency while minimizing the effect on performance and exhaust." *Id.* at 79.

At this stage, Patent Owner does not dispute Petitioner's challenge of claim 4 as allegedly obvious over Robichaux, Scherer, and Suzuki separately from Petitioner's challenge of claim 1 as allegedly obvious over Robichaux and Scherer.

Our review of Petitioner's arguments and evidence persuades us that Petitioner has demonstrated a reasonable likelihood of prevailing on its challenge of claim 4 as allegedly obvious over Robichaux, Scherer, and Suzuki.

H. Alleged Obviousness of Claims 5 and 6 over Robichaux, Scherer, Suzuki, and Takahashi

Claim 5 depends from claim 4, and claim 6 depends from claim 5. Ex. 1001, 4:45–53. In addition to the limitations of claim 4, claims 5 and 6 add the same limitations recited in claims 2 and 3. Ex. 1001, 4:23–30, 4:45–53.

Building from the challenge of claim 4 as allegedly obvious over Robichaux, Scherer, and Suzuki, Petitioner asserts that the limitations added by claims 5 and 6 would have been obvious over Takahashi combined with Robichaux, Scherer, and Suzuki. Pet. 91–94. Petitioner argues, for example, that "a [person of ordinary skill in the art] would have been motivated to combine the teachings of Takahashi with Robichaux, Scherer, and Suzuki so that Robichaux's controller converges the engine output torque to the demand torque more precisely." *Id.* at 92.

At this stage, Patent Owner does not dispute Petitioner's challenge of claims 5 and 6 as allegedly obvious over Robichaux, Scherer, Suzuki, and Takahashi separately from Petitioner's challenge of claim 1 as allegedly obvious over Robichaux and Scherer.

Our review of Petitioner's arguments and evidence persuades us that Petitioner has demonstrated a reasonable likelihood of prevailing on its assertion that claims 5 and 6 would have been obvious over Robichaux, Scherer, Suzuki, and Takahashi.

III. CONCLUSION

Based on the evidence before us, we determine that Petitioner has demonstrated a reasonable likelihood of prevailing at least on its assertion

that claims 1–7 of the '565 patent are unpatentable. Accordingly, we institute trial on all the challenges in the Petition.

At this stage of the proceeding, the Board has not made a final determination on the construction of any claim term or the patentability of any challenged claim.

IV. ORDER

Upon consideration of the record before us, it is:

ORDERED that, pursuant to 35 U.S.C. § 314(a), an *inter partes* review of claims 1–7 of the '565 patent is instituted with respect to all grounds set forth in the Petition; and

FURTHER ORDERED that, pursuant to 35 U.S.C. § 314(c) and 37 C.F.R. § 42.4(b), *inter partes* review of the '565 patent shall commence on the entry date of this Order, and notice is hereby given of the institution of a trial.

IPR2020-00445
Patent 6,581,565 B2

PETITIONER:

Michael Specht
Mspecht-ptab@sternekessler.com

Jason Fitzsimmons
Jfitzsimmons-ptab@sternekessler.com

Daniel Yonan
Dyonan-ptab@sternekessler.com

Kyle Conklin
kconklin-ptab@sternekessler.com

Stephen Merrill
smerrill-ptab@sternekessler.com

PATENT OWNER:

Timothy Devlin
Td-ptab@devlinlawfirm.com

Trials@uspto.gov
571-272-7822

Paper 12
Date: August 5, 2020

UNITED STATES PATENT AND TRADEMARK OFFICE

BEFORE THE PATENT TRIAL AND APPEAL BOARD

VOLKSWAGEN GROUP OF AMERICA, INC.,
Petitioner,

v.

MICHIGAN MOTOR TECHNOLOGIES LLC,
Patent Owner.

IPR2020-00444
Patent 6,581,565 B2

Before NEIL T. POWELL, SCOTT B. HOWARD, and
SEAN P. O'HANLON, *Administrative Patent Judges*.

POWELL, *Administrative Patent Judge*.

DECISION
Granting Institution of *Inter Partes* Review
35 U.S.C. § 314

I. INTRODUCTION

A. Background

Volkswagen Group of America, Inc. ("Petitioner") filed a Petition (Paper 2, "Pet.") to institute an *inter partes* review of claims 1–7 of U.S. Patent No. 6,581,565 B2 (Ex. 1001, "the '565 patent"). Michigan Motor Technologies LLC ("Patent Owner") filed a Preliminary Response. Paper 7 ("Prelim. Resp."). Pursuant to our authorization, Petitioner filed a Reply (Paper 9, "Pet. Reply"), and Patent Owner filed a Sur-reply (Paper 10, "Sur-reply").

We have authority to determine whether to institute an *inter partes* review. 35 U.S.C. § 314(b) (2018); 37 C.F.R. § 42.4(a) (2020). We may not institute an *inter partes* review "unless . . . there is a reasonable likclihood that the petitioner would prevail with respect to at least 1 of the claims challenged in the petition." 35 U.S.C. § 314(a). The Supreme Court has held that a decision to institute under 35 U.S.C. § 314 may not institute review on less than all claims challenged in the petition. *SAS Inst. Inc. v. Iancu*, 138 S. Ct. 1348, 1355–56 (2018). Moreover, if the PTAB institutes a trial, the PTAB will institute on all challenges raised in the petition. *See* Patent Trial and Appeal Board Consolidated Trial Practice Guide ("CTPG") 64 (Nov. 2019), https://www.uspto.gov/sites/default/files/documents/tpgnov.pdf ("The Board will not institute on fewer than all claims or all challenges in a petition.").

Applying those standards, and upon consideration of the information presented in the Petition, we determine that Petitioner has established a reasonable likelihood of success in proving that at least one claim of the '565 patent is unpatentable. Accordingly, we institute an *inter partes* review

as to all challenged claims of the '565 patent on all grounds raised in the Petition. We base our factual findings and conclusions at this stage of the proceeding on the evidentiary record developed so far. This is not a final decision as to the construction of any claim term or the patentability of any claim.

B. Related Proceeding

The parties identify the following matter as related to the '565 patent (Pet. 2; Paper 5, 2):

> *Michigan Motor Technologies LLC v. Volkswagen AG*, No. 2:19-cv-10485 (E.D. Mich.).

Additionally, in IPR2020-00445, Petitioner has filed another petition challenging claims 1–7 of the '565 patent. Pet. 2.

C. The '565 Patent

The '565 patent relates to torque control for internal combustion engines. Ex. 1001, code (57). The '565 patent describes an exemplary engine in connection with Figure 1, which is reproduced below.

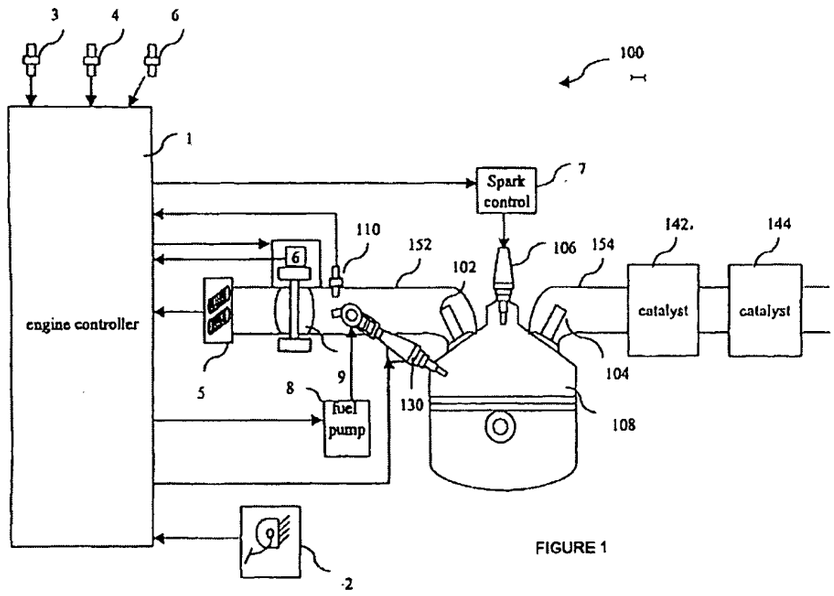

FIGURE 1

Figure 1 shows direct injection spark ignition engine 100, which includes air intake valve 102, exhaust valve 104, spark plug 106, combustion chamber 108, manifold absolute pressure sensor 110, fuel injector 130, three way catalytic converter 142, Nox trap/catalyst 144, air-intake manifold 152, and exhaust manifold 154. *Id.* at 2:40–56.

Direct injection spark ignition engine 100 also includes engine controller 1. *Id.* at 2:40–42. Accelerator pedal and sensor assembly 2, engine speed sensor 3, engine temperature sensor 4, air charge temperature sensor 5, manifold absolute pressure sensor 110, and throttle position indicator 6 all provide signals to engine controller 1. *Id.* at 2:42–46.

Air and fuel mix in combustion chamber 108. *Id.* at 2:47–49. Throttle 9 controls an air charge, which travels via intake manifold 152 through intake air valve 102. *Id.* at 2:48–50. Fuel injector 130 injects the fuel into combustion chamber 108 directly. *Id.* at 2:47–48.

Spark control unit 7 operates spark plug 106 to produce a spark for igniting the air/fuel mixture. *Id.* at 2:51–53. The resulting combustion produces exhaust gases, which exit through exhaust valve 104 to exhaust manifold 154. *Id.* at 2:53–55.

The '565 patent discusses calculating a desired output torque in connection with Figure 2, which is reproduced below.

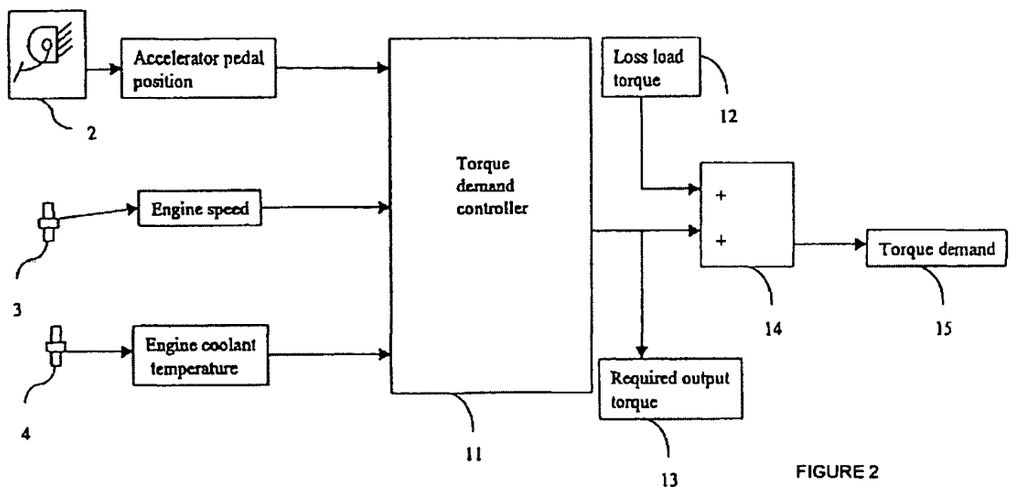

FIGURE 2

Figure 2 is a block diagram showing torque demand controller 11, which forms part of engine controller 1. *Id.* at 2:34–35, 2:57–58.

Torque demand controller 11 receives various signals and outputs torque demand signal 15. *Id.* at 2:58–67. Torque demand controller 11 receives an accelerator pedal position signal from accelerator pedal and sensor assembly 2, an engine speed signal from engine speed sensor 3, and an engine temperature signal from engine temperature sensor 4. *Id.* at 2:59–63. Based on these inputs, torque demand controller 11 determines required output torque signal 13, to which loss torque load signal 12 is added, which produces torque demand signal 15. *Id.* at 2:57–67.

The '565 patent discusses how the torque demand signal is used in connection with Figure 3, which is reproduced below.

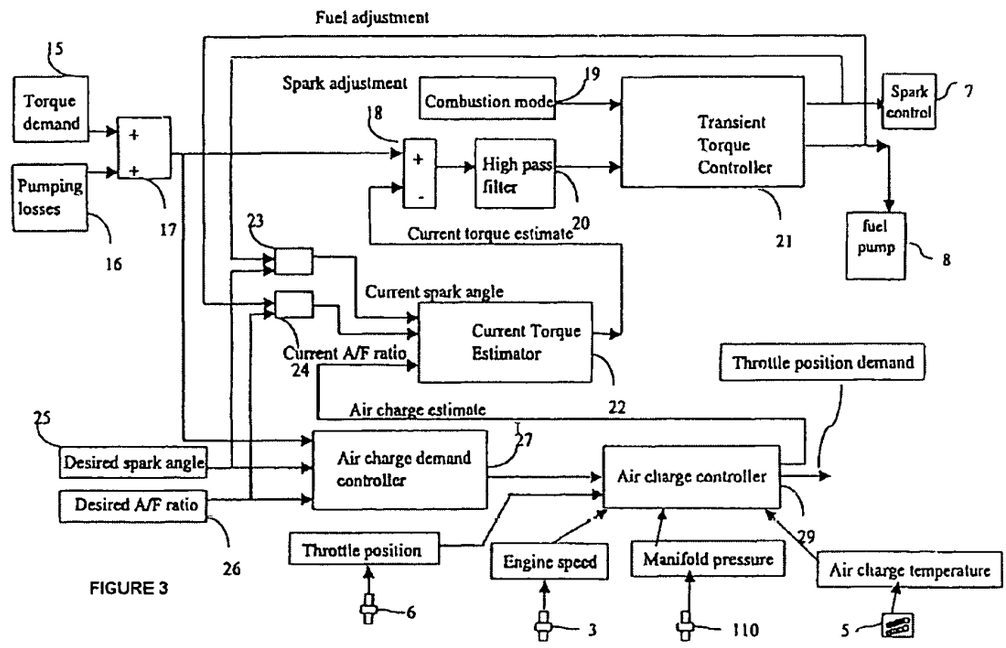

FIGURE 3

Figure 3 "is a block diagram of a torque producer." *Id.* at 2:36.

The torque producer of Figure 3 includes adder 17. *Id.* at 3:1–6. Adder 17 receives torque demand signal 15, as well as pumping losses signal 16, "which represents losses due to the inherent losses in the engine cycle." *Id.* at 3:1–4. Adder 17 generates a desired torque signal.

Air charge demand controller 27 receives the desired torque signal generated by adder 17, as well as desired spark angle signal 25 and desired air fuel ratio signal 26. *Id.* at 3:7–9. Air charge demand controller 27 produces an air charge demand signal, which it provides to air charge controller 29. *Id.* at 3:13–15.

Based on the air charge demand signal and various other inputs, air charge controller 29 provides multiple outputs. *Id.* at 3:13–22. Air charge controller 29 sends a desired throttle position signal to throttle 9. *Id.* at

3:19–21. Air charge controller 29 also produces "a signal representing an estimate of the air charge." *Id.* at 3:19–22.

Current torque estimator 22 receives the air charge estimate signal, along with a signal representing the current air/fuel ratio and a signal representing the current spark angle. *Id.* at 3:27–33. Based on these signals, current torque estimator 22 produces "a signal representing an estimate of the current torque." *Id.* at 3:29–33.

Comparator 18 compares the estimate of the current torque to the desired torque signal, producing an error signal. *Id.* at 3:34–36. High pass filter 20 filters the error signal. *Id.*

Transient torque controller 21 uses the filtered error signal "to generate signals for temporarily adjusting the torque produced by the engine 100." *Id.* at 3:36–39. Depending on whether combustion mode signal 19 indicates engine 100 is operating in stratified mode or homogeneous mode, either a fuel adjustment signal is generated to adjust fueling, or a spark adjustment signal is generated to adjust spark timing. *Id.* at 3:40–50.

D. Illustrative Claim

The '565 patent includes seven claims, all of which are challenged. Claims 1 and 7 are independent. Claims 2–6 depend, directly or indirectly, from claim 1. Claim 1 is illustrative and reproduced below.

> 1. A device for controlling a torque output of an engine, the device comprising:
> a torque demand controller for generating a torque demand signal; and
> a torque producer which receives the torque demand signal, the torque producer includes:
> an estimator which receives as inputs a current spark angle signal, a current air/fuel ratio signal and an

> estimated air charge signal and outputs an estimated torque signal;
>
> a comparator which receives as inputs the estimated torque signal and a desired torque signal and outputs a difference signal;
>
> a high pass filter which receives as an input the difference signal and outputs a filtered difference signal in which low frequency components are absent; and
>
> a transient torque controller which receives as an input the filtered difference signal and outputs a fuel adjustment signal and a spark adjustment signal.

Id. at 4:2–22.

E. Applied References

Petitioner relies upon the following references:

> Kelsuke Suzuki ct al., U.S. Patent No. 6,006,717 (Ex. 1005, "Suzuki"), issued Dec. 28, 1999.
>
> Michael J. Cullen et al., U.S. Patent No. 5,241,855 (Ex. 1006, "Cullen"), issued Sept. 7, 1993.
>
> Matthias Scherer et al., U.S. Patent No. 6,047,681 (Ex. 1007, "Scherer"), issued Apr. 11, 2000.
>
> Shinsuke Takahashi et al., U.S. Patent No. 5,282,449 (Ex. 1008, "Takahashi"), issued Feb. 1, 1994.

Pet. 4–5. Petitioner also relies upon the Declaration of C. Arthur MacCarley, Ph.D., PE. Ex. 1003. Patent Owner relies on the Declaration of Russell A. Leonard, Jr., Ph.D. Ex. 2001.

F. Asserted Grounds of Unpatentability

Petitioner challenges the patentability of claims 1–7 of the '565 patent based on the following grounds. Pet. 5.

Claims Challenged	35 U.S.C. §	Reference(s)/Basis
1, 4, 7	103[1]	Suzuki, Cullen, Scherer
2, 3, 5, 6	103	Suzuki, Cullen, Scherer, Takahashi

II. ANALYSIS

A. Level of Ordinary Skill in the Art

Petitioner contends that a person having ordinary skill in the art at the time of the invention ("POSA") would have had "a B.S. degree in Electrical Engineering or Mechanical Engineering (or equivalent), as well as at least 2–4 years of academic or industry experience in the relevant field of engine control systems." Pet. 16 (citing Ex. 1003 ¶¶ 40–41).

Patent Owner contends that a person having ordinary skill in the art at the time of the invention is "a person with (1) a B.S. in mechanical engineering or a closely related field with three or more years of experience in either engine systems or engine control systems or (2) at least a M.S. in mechanical engineering." Prelim. Resp. 12–13 (citing Ex. 2001 ¶ 14.)

Thus, both parties propose substantially similar definitions of the level of ordinary skill in the art, both requiring a bachelor's degree in mechanical engineering or the equivalent with either a few years of industry or academic (such as that required to obtain a master's degree in mechanical engineering) experience. At this stage, we find Petitioner's description to be more consistent with the disclosures of the '565 patent and the prior art of record, as it is focused on the field of engine control systems. *See* Ex. 1001, 1:6–8

[1] The Leahy-Smith America Invents Act ("AIA"), Pub. L. No. 112-29, 125 Stat. 284, 287–88 (2011), amended 35 U.S.C. § 103. Because the '565 patent was filed before March 16, 2013, the effective date of the relevant amendment, the pre-AIA version of § 103 applies.

("This invention relates to an engine torque controller for spark ignition engines . . . ."); Ex. 1005, 1:4–6 ("This invention is directed to a direct-injection spark-ignition type engine control apparatus for correcting engine torque based on engine operating conditions."); Ex. 1006, 1:7–8 ("This invention relates to engines and in particular to inferring the torque produced by an engine."); Ex. 1007, code (57) ("The invention provides a process and an apparatus for controlling the engine torque of an internal-combustion engine."). Accordingly, we adopt Petitioner's definition as our own for purposes of this Decision. *See, e.g.*, *In re GPAC Inc.*, 57 F.3d 1573, 1579 (Fed. Cir. 1995).[2]

B. Claim Construction

We construe claims "using the same claim construction standard that would be used to construe the claim in a civil action under 35 U.S.C. 282(b), including construing the claim in accordance with the ordinary and customary meaning of such claim as understood by one of ordinary skill in the art and the prosecution history pertaining to the patent." 37 C.F.R. § 42.100(b); *see also Phillips v. AWH Corp.*, 415 F.3d 1303 (Fed. Cir. 2005) (en banc).

In this context, claim terms "are generally given their ordinary and customary meaning" as understood by a person of ordinary skill in the art in question at the time of the invention. *Phillips*, 415 F.3d at 1312–13; *see also CCS Fitness, Inc. v. Brunswick Corp.*, 288 F.3d 1359, 1366 (Fed. Cir.

[2] If Patent Owner argues a different level of ordinary skill in the art in its Response, the parties are encouraged to address whether there are any material differences between the two proposals and what impact, if any, the different level has on the obviousness analysis.

2002) (There is "a 'heavy presumption' that a claim term carries its ordinary and customary meaning."). "In determining the meaning of the disputed claim limitation, we look principally to the intrinsic evidence of record, examining the claim language itself, the written description, and the prosecution history, if in evidence." *DePuy Spine, Inc. v. Medtronic Sofamor Danek, Inc.*, 469 F.3d 1005, 1014 (Fed. Cir. 2006) (citing *Phillips*, 415 F.3d at 1312–17). Extrinsic evidence is "less significant than the intrinsic record in determining 'the legally operative meaning of claim language.'" *Phillips*, 415 F.3d at 1317 (quoting *C.R. Bard, Inc. v. U.S. Surgical Corp.*, 388 F.3d 858, 862 (Fed. Cir. 2004)).

Only those claim terms that are in controversy need to be construed, and only to the extent necessary to resolve the controversy. *See Nidec Motor Corp. v. Zhongshan Broad Ocean Motor Co.*, 868 F.3d 1013, 1017 (Fed. Cir. 2017) (stating that "we need only construe terms 'that are in controversy, and only to the extent necessary to resolve the controversy'" (quoting *Vivid Techs., Inc. v. Am. Sci. & Eng'g, Inc.*, 200 F.3d 795, 803 (Fed. Cir. 1999))).

Petitioner argues that the claims "should receive their plain and ordinary meaning, in the context of the '565 patent specification, under the *Phillips* standard." Pet. 17. Patent Owner agrees. Prelim. Resp. 13. For purposes of resolving the parties' patentability disputes, we need not construe expressly any claim language.

C. Discretion under 35 U.S.C. § 314

Under § 314(a), we have discretion to deny institution of an *inter partes* review. *Cuozzo Speed Techs., LLC v. Lee*, 136 S. Ct. 2131, 2140 (2016); *SAS Inst. Inc. v. Iancu*, 138 S. Ct. 1348, 1356 (2018); *Harmonic Inc.*

v. Avid Tech., Inc., 815 F.3d 1356, 1367 (Fed. Cir. 2016) ("[T]he PTO is permitted, but never compelled, to institute an IPR proceeding."); *see also* 37 C.F.R. § 42.4(a) ("The Board institutes the trial on behalf of the Director.").

Here, Petitioner has filed on the same day two petitions challenging claims 1–7 of the '565 patent. In IPR2020-00445, Petitioner presents four obviousness challenges, the first based on Robichaux[3] and Scherer, each of the others based on Robichaux and Scherer combined with one or both of Takahashi and Suzuki. IPR2020-00445, Paper 3 at 5. In this proceeding, Petitioner presents two obviousness grounds, one based on Suzuki, Cullen, and Scherer, the other based on Suzuki, Cullen, Scherer, and Takahashi. Pet. 5.

Petitioner filed a Notice of Ranking. Paper 3 ("Notice"). The Notice ranks the Petition in this proceeding above the petition in IPR2020-00445. Notice 1. Patent Owner did not file a response to the Notice.[4] We do not exercise our discretion under § 314(a) to deny this Petition. Furthermore, the discretion under § 314(a) is not executed in IPR2020-00445 for the reasons stated in the Decision on Institution in that proceeding.

---

[3] "Robichaux" refers to Jerry Dean Robichaux et al., European Patent Application No. EP 1 076 165 A2 (IPR2020-00445, Ex. 1020, "Robichaux"), published Feb. 14, 2001.

[4] Patent Owner also does not dispute Petitioner's arguments in IPR2020-00445 that its simultaneous filing of two petitions does not prejudice Patent Owner. *See generally* IPR2020-00445, Papers 2, 7, 10.

D. Discretion under 35 U.S.C. § 325(d)

In *Advanced Bionics, LLC v. Med-El Elektromedizinische Geräte GMBH*, IPR2019-01469, Paper 6 (PTAB Feb. 13, 2020) (precedential) ("*Advanced Bionics*"), the Board applied a two-part framework in considering whether to exercise discretion to deny institution under § 325(d): "(1) whether the same or substantially the same art previously was presented to the Office or whether the same or substantially the same arguments previously were presented to the Office; and (2) if either condition of [the] first part of the framework is satisfied, whether the petitioner has demonstrated that the Office erred in a manner material to the patentability of challenged claims." *Advanced Bionics* at 8.

Within this two-part framework, the Board considers a number of non-exclusive factors in evaluating whether to exercise its discretion under § 325(d). *See Becton, Dickinson & Co. v. B. Braun Melsungen AG*, IPR2017-01586, Paper 8 (PTAB Dec. 15, 2017) (precedential as to § III.C.5, first para.) ("*Becton, Dickinson*"); *see also Advanced Bionics* at 9–11. The factors set forth in *Becton, Dickinson* are as follows:

> (a) the similarities and material differences between the asserted art and the prior art involved during examination; (b) the cumulative nature of the asserted art and the prior art evaluated during examination; (c) the extent to which the asserted art was evaluated during examination, including whether the prior art was the basis for rejection; (d) the extent of the overlap between the arguments made during examination and the manner in which petitioner relies on the prior art; (e) whether petitioner has pointed out sufficiently how the examiner erred in its evaluation of the asserted prior art; and (f) the extent to which additional evidence and facts presented in the petition warrant reconsideration of the prior art or arguments.

Becton, Dickinson at 17–18.

Factors (a), (b), and (d) of the *Becton, Dickinson* factors relate to whether the art or arguments presented in the Petition are the same or substantially the same as those previously presented to the Office. *Advanced Bionics* at 10. Factors (c), (e), and (f) "relate to whether the petitioner has demonstrated a material error by the Office" in its prior consideration of that art or arguments. *Id.* Only if the same or substantially the same art or arguments were previously presented to the Office do we then consider whether petitioner has demonstrated a material error by the Office. *Id.* "At bottom, this framework reflects a commitment to defer to previous Office evaluations of the evidence of record unless material error is shown." *Id.* at 9.

The Petition argues that we should not deny institution under § 325(d). Pet. 24–28. The Petition notes that Scherer was cited in an information disclosure statement during prosecution of U.S. Patent Application No. 14/928,980 ("the '980 application"), which issued as the '565 patent. *Id.* at 25–26. The Petition argues, however, that it presents Scherer in combination with Suzuki and Cullen, which the Office did not consider during prosecution of the '980 application. *Id.* at 27–28. Petitioner asserts that the Petition demonstrates that

> Suzuki's torque controller generates a demand torque, estimates a torque output, compares the demand torque to the estimated torque to determine the difference, and controls torque output through fuel quantity and spark timing adjustments based on the calculated difference. . . . Cullen's engine controller estimates torque output based on current spark angle, current air/fuel ratio, and estimated air charge. . . . Scherer's transient torque control system uses a high-pass filter for its typical purpose, here, to remove the low frequency component of a torque signal and output the filtered signal to a torque controller. . . . And as

> discussed below, a POSA would have been motivated to combine Cullen's and Scherer's teachings with Suzuki's torque controller, providing the predictable result of precisely controlling engine torque output. . . . Accordingly, combining Suzuki, Cullen, and Scherer does not present the same or substantially similar prior art or arguments before the Office, so the Board should **not** deny institution under § 325(d).

Id. at 27–28.

Patent Owner argues that "Petitioner attempts to modify *Scherer*, which is already of record, with selective teachings of two or more secondary references, which are cumulative of the admitted prior art of the '565 patent." Prelim. Resp. 4–5. Patent Owner adds that

> The '565 patent discloses what was well known in the prior art, namely, that, "[i]n engine torque controllers for DISI engines, when the engine is operated in stratified mode, spark angle has little influence on the torque produced. . . . The torque producer modifies the air/fuel in order to control the torque produced. . . . Conversely, when the engine is operating in homogenous mode . . . [t]he torque producer modifies the timing of the spark ignition in order to control the torque produced." (Ex. 1001 at 1:36-45; (*Id.* at 23.)[).] This disclosure constitutes the "admitted prior art" of the '565 patent.

Id. at 10–11.

In response, Petitioner argues, among other things, that Suzuki is not cumulative of the admitted prior art. Petitioner explains that

> In addition to admitted prior art features, Suzuki discloses (1) a torque controller, Pet., 41–43; (2) a torque producer, *id.*, 43–44; (3) a torque estimator, *id.*, 44–45; (4) a comparator, *id.*, 48–50; (5) a high-pass filter, *id.*, 50–57; and (6) a transient torque controller, *id.*, 57–61. The Office never considered that a single prior art reference included these additional features. Failing to consider Suzuki was material error as the '565 patent claims are obvious in view of Suzuki, Cullen, and Scherer.

Pet. Reply 7–8.

Patent Owner does not respond to Petitioner's assertion that Suzuki teaches a number of things beyond the admitted prior art. *See generally* Sur-reply.

We begin our analysis by considering whether "the same or substantially the same prior art or arguments" were presented previously to the Office. To do so, we look to *Becton, Dickinson* factors (a), (b), and (d). *Advanced Bionics* at 10.

Considering *Becton, Dickinson* factors (a) and (b), we find the art primarily asserted by Petitioner materially differs from and is not cumulative to the art involved during examination of the '980 patent. During examination of the '980 application, Scherer was cited by the Applicant on an Information Disclosure Statement, and the Examiner indicated on the Information Disclosure Statement that Scherer was considered. *See* Ex. 1002, 42–44. Aside from this, the present record reflects that the art asserted by Petitioner bears little or no similarity to and is not cumulative of the art involved during examination. At this stage, Patent Owner does not dispute Petitioner's assertion that Suzuki teaches "(1) a torque controller, Pet., 41–43; (2) a torque producer, *id.*, 43–44; (3) a torque estimator, *id.*, 44–45; (4) a comparator, *id.*, 48–50; (5) a high-pass filter, *id.*, 50–57; and (6) a transient torque controller, *id.*, 57–61." Pet. Reply 7–8; *see generally* Sur-reply. Additionally, Patent Owner does not argue, and it is not readily apparent, that any of these asserted disclosures of Suzuki are also taught by the admitted prior art. *See* Prelim. Resp. 10–11 (citing '565 patent column 1, lines 36–45 as "constitut[ing] the 'admitted prior art' of the '565 patent"); *see generally* Sur-reply. The admitted prior art discusses adjusting spark timing and fuel timing during stratified combustion and homogeneous

combustion operation (Ex. 1001, 1:36–45), but it is not clear that it discusses any of the things listed by Petitioner as disclosed in Suzuki. For example, Patent Owner does not provide any persuasive evidence or explanation that the admitted prior art teaches an "estimator" or "comparator." *See generally* Prelim. Resp.; Sur-reply. Nor does Patent Owner assert that Scherer teaches the claimed "estimator" or "comparator." *See generally* Prelim. Resp.; Sur-reply.

Regarding *Becton, Dickinson* factor (d), there appears to be no overlap between the arguments presented by Petitioner and arguments made during examination. The '980 application received a first-action allowance with no explanation of any reasons for allowance. Ex. 1002, 49–50.

For the above reasons, we determine that the same or substantially the same art or arguments were not previously presented to the Office, and we need not consider the second part of the *Advanced Bionics* framework. Accordingly, we decline to exercise our discretion under 35 U.S.C. § 325(d) to deny the Petition.

E. Alleged Obviousness of Claims 1, 4, and 7 over Suzuki, Cullen, and Scherer

1. Overview of Suzuki

Suzuki "is directed to a control apparatus, or controller, for a direct-injection spark-ignition type engine." Ex. 1005, 2:52–53. Suzuki shows an exemplary engine in Figure 2, which is reproduced below.

FIG.2

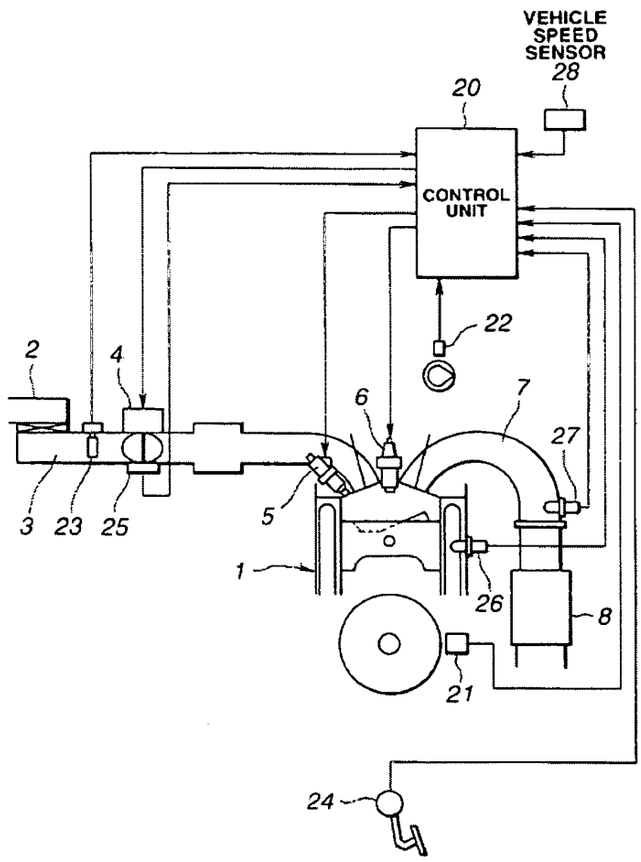

Figure 2 shows engine 1, which includes intake passage 3, throttle valve 4, fuel injector 5, spark plug 6, exhaust passage 7, controller 20, accelerator sensor 24, and various other components. *Id.* at 3:24–43, 3:61–4:5, 4:18–21.

Engine 1 is "a direct-injection spark-ignition engine." *Id.* at 3:23–24. Controller 20 controls throttle valve 4, which controls air intake through intake passage 3 into the combustion chamber. *Id.* at 3:24–31. In response to a signal from controller 20, fuel injector 5 injects fuel directly into the combustion chamber. *Id.* at 3:33–34. The fuel mixes with air in the combustion chamber, and spark plug 6 generates a spark to combust the

mixture of fuel and air. *Id.* at 3:38–45. Exhaust gases leave the combustion chamber through exhaust passage 7. *Id.* at 3:62–63.

Fuel injector 5 can introduce fuel into the combustion chamber during the intake stroke or the compression stroke. *Id.* at 3:39–44. If fuel injector 5 injects fuel during the intake stroke, the fuel forms a homogeneous mixture with the air in the combustion chamber. *Id.* at 3:39–42. If fuel injector 5 injects fuel during the compression stroke, the fuel forms a stratified mixture with the air around spark plug 6. *Id.* at 3:42–44. "The combustion modes include homogenous stoichiometric combustion . . . , homogeneous lean combustion . . . , and stratified lean combustion." *Id.* at 3:46–50. Suzuki discusses provisions for switching between homogeneous and stratified combustion modes in connection with Figures 1(A) and 1(B), which are reproduced below.

FIG.1(A)

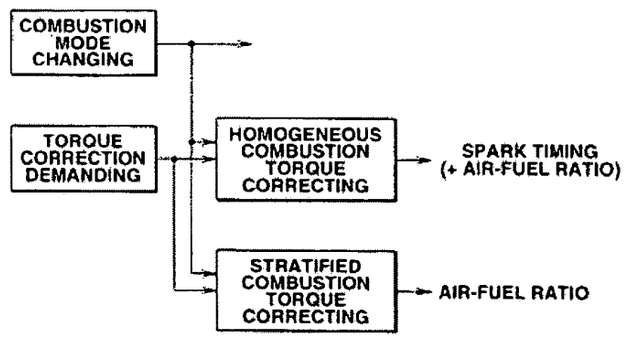

FIG.1(B)

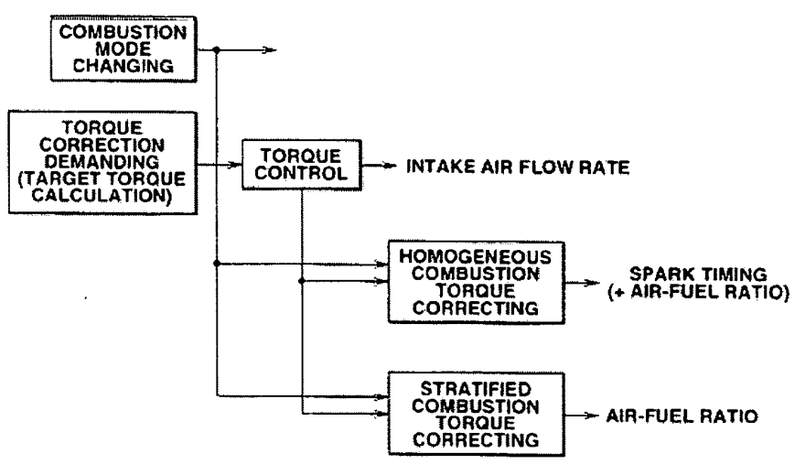

Figures 1(A) and 1(B) are "block diagrams showing the overall arrangement of the invention." *Id.* at 1:66–67.

In Figure 1(A), there is shown a combustion mode changing section, a torque correction demanding section, a homogeneous combustion torque correcting section, and a stratified combustion torque correcting section. *Id.* at 2:54–3:4. Combustion mode changing section serves to make "a combustion change between homogeneous combustion (wherein fuel is

injected during an intake stroke to diffuse the fuel so as to form a homogeneous mixture in the combustion chamber) and stratified combustion (wherein fuel is injected during a compression stroke to form a stratified mixture around the spark plug)." *Id.* at 2:55–61. The torque correction demanding section generates a torque correction demand according to engine operating conditions. *Id.* at 2:61–63. During homogeneous combustion, the homogeneous torque correcting section responds to the torque correction demand by "correcting at least the spark timing in order to make a torque correction during homogeneous combustion." *Id.* at 2:64–3:1. During stratified combustion, the stratified torque correcting section responds to the torque correction demand "and corrects at least the air-fuel ratio in order to make a torque correction." *Id.* at 3:1–3.

Another overall arrangement appears in Figure 1(B). *Id.* at 3:5. In addition to the sections of the arrangement of Figure 1(A), the arrangement of Figure 1(B) includes a torque control section, which responds "to the torque correction demand and controls the amount of air permitted to enter the engine in order to control the torque." *Id.* at 3:12–15. Suzuki explains that

> [b]ecause air intake cannot be changed rapidly, a homogenous combustion torque correcting section corrects at least the spark timing in order to make a torque correction with a fast response (compared with the delay associated with intake air flow rate control) during homogenous combustion. A stratified combustion torque correcting section corrects at least the air-fuel ratio to make torque correction during stratified combustion.

Id. at 3:15–22.

Suzuki discusses details of one method of correcting torque in connection with Figure 6, which is reproduced below.

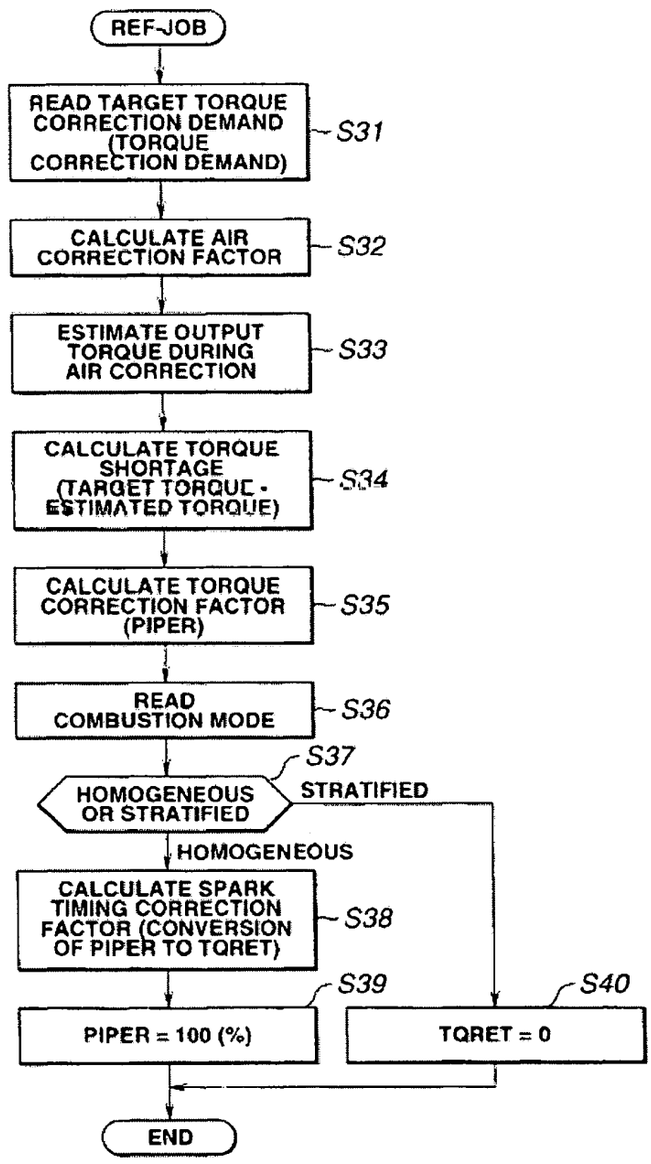

Figure 6 is a flow diagram illustrating "a torque correcting routine." *Id.* at 2:10–11, 7:11–12.

In step S31, "a target torque tTRQ calculated by torque demand control is retrieved. The parameter tTRQ includes a torque correction demand (demand for increasing or decreasing the torque) resulting from gear shifting of the transmission, turning on the air conditioner, recovery from a fuel cut, or the like." *Id.* at 7:14–19. Following this,

> [i]n step S32, an air correction factor to obtain the target torque (the torque correction demand) is calculated to control the degree of opening of the electronic controlled throttle valve 4.
>
> In step S33, the output torque during intake air correction is estimated.
>
> In step S34, the estimated torque is subtracted from the target torque (which is based on the torque demand control target torque or the torque correction demand calculated at step S31) to calculate the torque shortage due to the delay involved with changing the amount of intake air.

Id. at 7:29–39.

At step S36, the combustion mode is read and it is ascertained whether it is the homogeneous or stratified combustion mode. *Id.* at 7:45–50.

Depending on which combustion mode is active, in step S38 or step S40, different control parameters are set. *Id.* at 7:51–64. Subsequently, control proceeds according to a spark timing calculation routine and a fuel delivery requirement calculation routine. *Id.* at 7:65–67.

For the embodiment discussed in connection with Figure 6, Suzuki shows response waveforms in Figure 13, which is reproduced below.

FIG.13

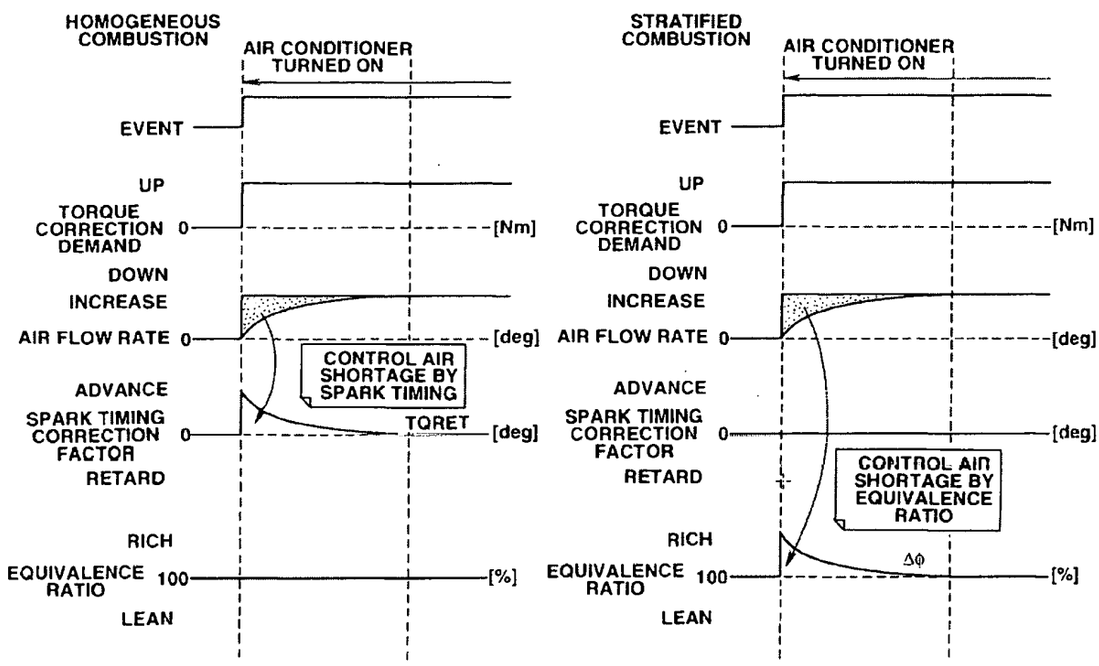

Figure 13 shows, for both homogeneous combustion and stratified combustion, variation in certain values, such as torque correction demand, air flow rate, spark timing correction factor, and equivalence ratio in response to activation of an air conditioner. *See id.*, Fig. 13. Suzuki explains that

> FIG. 13 shows response waveforms for the second embodiment. Assuming that a torque correction (torque up) demand is produced when the air conditioner is turned on, the amount of air to the engine increases; however, a torque shortage occurs because of the delay in increasing the actual amount of air to the engine. The spark timing is corrected to correct the torque shortage during homogeneous combustion and the equivalence ratio (air-fuel ratio) is corrected, without correcting the spark

> timing, to correct the torque shortage during stratified combustion.

Id. at 8:51–60.

2. Overview of Cullen

Cullen discusses "inferring the torque produced by an engine." Ex. 1006, 1:7–8. Cullen teaches states that it was not practical to measure engine torque directly. *Id.* at 1:16–17. Cullen desires "an improved torque prediction algorithm." *Id.* at 2:26–29. Cullen discusses an example of inferring engine torque in connection with Figures 3 and 3A, which are reproduced below.

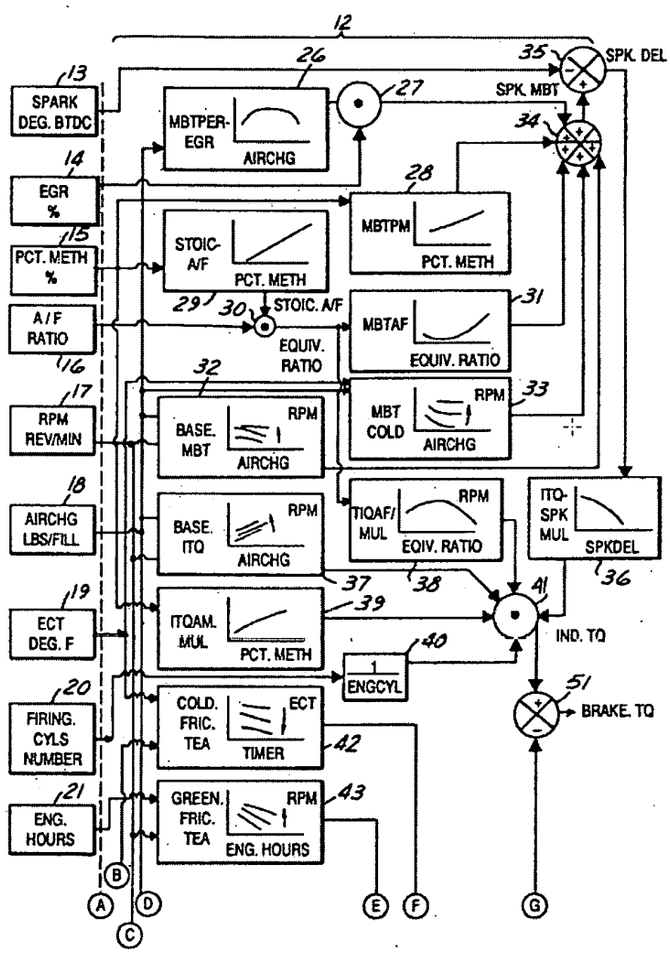
12
13
SPARK DEG. BTDC
14
EGR %
15
PCT. METH %
A/F RATIO
16
17
RPM REV/MIN
18
AIRCHG LBS/FILL
19
ECT DEG. F
20
FIRING. CYLS NUMBER
21
ENG. HOURS
26
MBTPER-EGR
AIRCHG
27
35
SPK. DEL
SPK. MBT
34
28
MBTPM
PCT. METH
STOIC-A/F
PCT. METH
29
30
STOIC. A/F
EQUIV. RATIO
MBTAF
EQUIV. RATIO
31
32
BASE. MBT
RPM
AIRCHG
MBT COLD
RPM
AIRCHG
33
BASE. ITQ
RPM
AIRCHG
TIQAF/MUL
RPM
EQIV. RATIO
ITQ-SPK MUL
SPKDEL
37
38
36
41
ITQAM. MUL
PCT. METH
39
40
IND. TQ
1/ENGCYL
51
BRAKE. TQ
COLD. FRIC. TEA
ECT
TIMER
42
GREEN. FRIC. TEA
RPM
ENG. HOURS
43
A
B
C
D
E
F
G

FIG.3

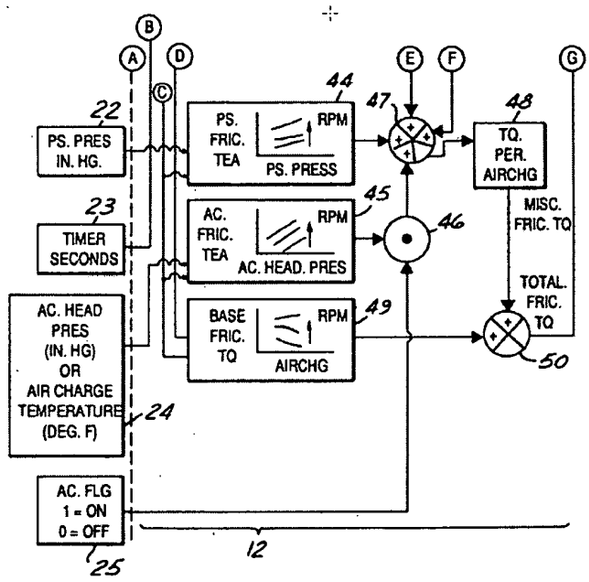

FIG.3A

Figures 3 and 3A provide "a logic flow diagram of the operation of an electronic engine control module." *Id.* at 2:52–54.

Figures 3 and 3A show electronic engine control module 12. *Id.* at 6:3–4. Electronic control module 12 has algorithms for processing spark timing input 13, exhaust gas recirculation rate input 14, percent methanol fuel input 15, air/fuel ratio input 16, engine rpm input 17, engine air charge input 18, engine coolant temperature 19, firing cylinder indication input 20, engine operating hours 21, power steering pressure 22, timer input 23, input 24 indicating air conditioning head pressure or temperature, and flag input 25 indicating air conditioning on or off. *Id.* at 5:61–6:2. Based on inputs from various blocks, block 41 provides indicated torque. *Id.* at 6:67–7:1. Based on inputs from various blocks, summer 50 (Figure 3A) provides total friction torque. *Id.* at 7:28–29. Summer 51 (Figure 3) receives positive

input from block 41 and negative input from summer 50 "to provide total friction torque." *Id.* at 7:31–33.

3. Overview of Scherer

Scherer discloses an apparatus and method for controlling an internal combustion engine's torque. Ex. 1007, 1:7–11. Scherer discusses one embodiment in connection with Figure 1, which is reproduced below.

Fig. 1

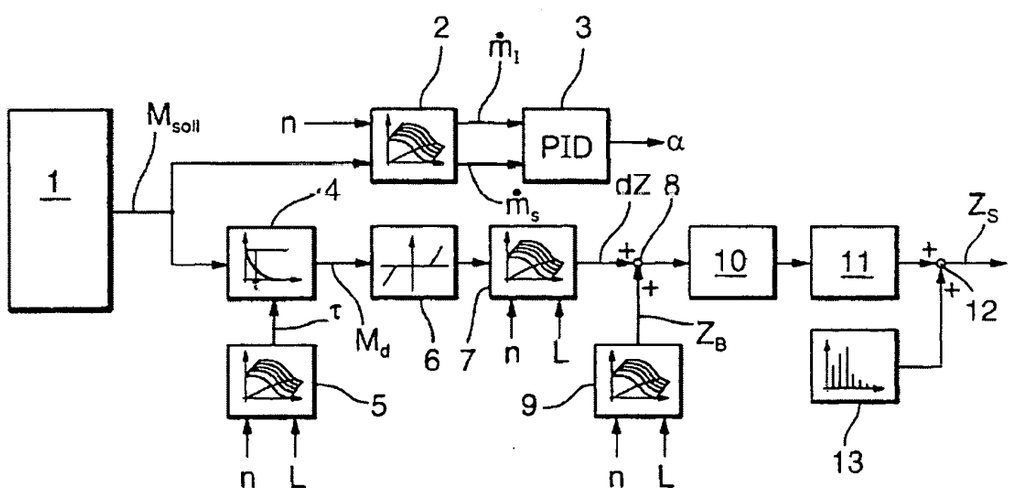

Figure 1 is a block diagram of a device for adjusting engine torque of an Otto engine. *Id.* at 3:30–31.

The device of Figure 1 includes engine torque coordination unit 1, an "airflow regulating branch," and a parallel "ignition point adjusting branch." *Id.* at 3:60–63, 4:20–23. Engine torque coordination unit 1 "provides a signal indicative, for example, of the desired engine torque (M_{des}) requested by the driver via the accelerator pedal."[5] *Id.* at 3:61–63. The airflow

[5] The signal referred to as M_{des} in the text appears to be labeled M_{soll} in Figure 1.

regulating branch includes input-side air flow rate calculating unit 2 and adjoining PID air flow rate regulator 3. *Id.* at 3:67–4:2. The ignition point adjusting branch includes high pass filter 4 with characteristic time constant diagram unit 5. *Id.* at 4:20–35. The ignition point adjusting branch also includes input-side dead zone unit 6, unit 7, adder 8, ignition point calculating unit 9, unit 10, unit 11, adder 12, and conventional knock regulating stage 13. *Id.* at 4:53–5:5.

Air flow rate calculating unit 2 of the airflow regulating branch receives demanded desired engine torque M_{des} and the momentary rotational engine speed (n). *Id.* at 4:2–5. Based on these inputs and a stored characteristics diagram, air flow rate calculating unit 2 calculates a desired air flow rate value (m_s). *Id.* at 4:2–7. The actual air flow rate value (m_l) is also detected by air flow rate calculating unit 2 via an associated sensor system. *Id.* at 4:8–10.

PID air flow regulator 3 receives both the desired air flow rate value m_s and the actual air flow rate value m_l. *Id.* at 4:8–12. Based on these values, PID air flow regulator 3 identifies "a suitable control signal (α) for an air-flow regulating throttle valve." *Id.* at 4:8–13. Scherer explains that

> As is well known, because of the finite throttle valve adjusting speed and mainly because of the suction pipe filling characteristics, engine torque cannot be adjusted in this manner to follow a highly dynamic desired engine torque change without a noticeable sluggishness. That is, it can adjust only a quasi-static desired engine torque part.

Id. at 4:13–19.

Given this, Scherer relies on the ignition point adjusting branch "to adjust the dynamic desired torque component which exceeds this quasi-static part." *Id.* at 4:20–22. Scherer uses the ignition point adjusting branch

> only to adjust specifically that dynamic desired torque component which cannot be regulated by the air-flow-regulating branch. The high pass filter stage, which precisely determines this dynamic desired torque component (M_d), consists of a high pass filter 4 with an adjustable decay time constant (τ), and a characteristic time constant diagram unit 5.

Id. at 4:28–35.

High pass filter 4 transmits the dynamic desired torque component M_d to input-side dead zone unit 6, and the ignition point adjusting branch uses the dynamic desired torque component M_d and various other factors to generate an adjusting signal (Z_S) for the ignition point adjustment, which is output from adder 12. *Id.* at 4:53–5:6. Scherer explains that "[t]he ignition point adjusting branch is able to react very rapidly to sudden changes of the engine torque." *Id.* at 4:23–25.

Scherer discusses other variations of its system in connection with Figures 2–4. For example, in connection with Figure 2, Scherer discusses a system similar to that of Figure 1 but adapted for a diesel engine. *Id.* at 5:16–18. In this embodiment, "instead of an air flow regulating device, a device for adjusting the fuel injection duration is provided." *Id.* at 5:23–24. Additionally, "[i]nstead of the ignition point adjusting branch of the device of Fig. 1, the device of Fig. 2 contains an injection start adjusting branch." *Id.* at 5:35–37.

4. Discussion

Petitioner asserts that Suzuki, Cullen, and Scherer, in combination, teach all of the limitations of claims 1, 4, and 7. Pet. 39–69. Petitioner cites Suzuki as teaching most of the limitations of claims 1, 4, and 7. *Id.* For example, Petitioner asserts that Suzuki teaches "a device for controlling a

torque output of an engine"[6] having a "torque demand controller for generating a torquc dcmand signal," as recited in claim 1. *Id.* at 39–43. Additionally, Petitioner asserts that Suzuki teaches "a torque producer which receives the torque demand signal," as recited in claim 1. *Id.* at 43–44. Petitioner also asserts that the torque producer taught by Suzuki includes "a comparator," as recited in claim 1. *Id.* at 48–50.

Petitioner asserts that Suzuki and Cullen render obvious claim 1's "estimator which receives as inputs a current spark angle signal, a current air/fuel ratio signal and an estimated torque signal." *Id.* at 44–48. Petitioner explains that Suzuki teaches estimating an output torque in connection with step S33 of Figure 6. *Id.* at 44. Petitioner argues "[t]hus, Suzuki's torque correction section includes an 'estimator,' as recited in claim 1, that estimates a torque output." *Id.* at 45. Conceding that Suzuki does not disclose expressly that its estimator receives "a current spark angle signal, a current air/fuel ratio signal, and an estimated air charge signal" as inputs, Petitioner asserts that "Cullen explicitly disclosed this feature" in connection with its calculation of a predicted torque ("IND_TQ"). *Id.* at 45–47.

Petitioner asserts that it would have been obvious to program Suzuki's controllers to use the inputs disclosed by Cullen for estimating torque. *Id.* at 47. Petitioner argues that this would ensure that "Suzuki's controller estimates torque output more accurately." *Id.* Petitioner contends that a person of ordinary skill in the art "would have been motivated to modify Suzuki's control unit 20 so that the estimator receives a current spark angle

[6] At this stage of the proceeding, we need not address whether the preamble of claim 1 is limiting, as Petitioner shows sufficiently for purposes of institution that the recitation in the preamble is satisfied by the prior art.

signal, a current air/fuel ratio signal, and an estimated air charge signal as inputs." *Id.* at 48. Petitioner argues that a person of ordinary skill in the art could have easily implemented the teachings of Cullen in Suzuki's system simply by programming Suzuki's control unit 20. *Id.*

Additionally, Petitioner asserts that Suzuki and Scherer render obvious claim 1's "high pass filter which receives as an input the difference signal in which low frequency components are absent." *Id.* at 33–39, 50–57. Conceding no express teaching in Suzuki of a high pass filter, Petitioner argues that "Suzuki's spark and fuel correction factor curves in Figure 12-15 suggest that a high-pass filter is, in fact, being used." [Ex. 1003 ¶ 94.] To a [person of ordinary skill in the art], the shape of these curves suggests that the torque correction demand signal is filtered with a high-pass filter." Pet. 33. Petitioner further argues that "Scherer expressly discloses using a high-pass filter to remove a low frequency component from a torque signal, thereby isolating the torque signal's high frequency, dynamic component." *Id.* at 34.

Petitioner argues that it would have been obvious to a person of ordinary skill in the art to add Scherer's high pass filter 4 to Suzuki's system. *Id.* at 36–39, 53–57. Petitioner contends that "combining Suzuki's and Scherer's teachings would have yielded predictable benefits and result—for example, adjusting the torque output with a quicker response time during transient engine operations." *Id.* at 36–37. Petitioner asserts that "a [person of ordinary skill in the art] would have further understood that combining Scherer's high-pass filter 4 with Suzuki's control unit 20 would have expedited the response time for correcting the transient component of the demand torque." *Id.* at 38. Petitioner argues that

> a [person of ordinary skill in the art] would have understood that Scherer teaches that the high-pass filter should output the filtered signal to the transient torque controller (i.e., the ignition point adjustment branch or injection start adjusting branch. EX1003, ¶99; EX1007, 4:53-56 ("The device for the ignition point adjustment receives the dynamic desired torque component (M_d) from the high-pass filter 4."); *see also* EX1007, 5:58-64 ("The comparatively rapidly reacting injection start adjusting branch regulates precisely that dynamic desired engine torque part (Md) ...for adjusting the injection duration in the case of sudden changes of the desired engine torque."). Accordingly, a [person of ordinary skill in the art] would have recognized that in combining Scherer's and Suzuki's teachings, the high-pass filter would output the filtered signal to Suzuki's transient torque control sections (i.e., the homogeneous and stratified torque correction sections). EX1003, ¶99.

Id. at 37–38. Petitioner adds that

> Given that the homogeneous and stratified torque correction sections in Suzuki's control unit 20 are intended to respond to dynamic changes in torque demand, a [person of ordinary skill in the art] would have been motivated to use Scherer's high-pass filter 4 to receive Suzuki's torque difference signal and output the dynamic component of the torque difference signal to Suzuki's homogeneous and stratified torque correction sections. EX1005, 1:44-63, 3:10-22; EX1003, ¶100.

Id. at 38.

This allegedly obvious combination of the references' teachings would also have claim 1's "transient torque controller," Petitioner contends. *Id.* at 57–61. Petitioner explains Suzuki "discloses that the homogeneous combustion torque correcting section converts the torque correction factor processed from the torque shortage signal into a spark timing adjustment when the engine is set in a homogeneous mode (S38)." *Id.* at 58.

Regarding claims 4 and 7, Petitioner relies on substantially the same reasoning that it allegedly would have been obvious to combine the

teachings of Suzuki, Cullen, and Scherer. *Id.* at 30–36, 61–69. Petitioner asserts that combining Cullen's disclosure regarding estimating torque and Scherer's high pass filter 4 with Suzuki's system would have resulted in a method meeting all of the limitations of claims 4 and 7. *Id.* at 61–69.

Patent Owner disputes Petitioner's argument that Suzuki suggests high pass filtering. Prelim. Resp. 15–18. In particular, Patent Owner argues that Suzuki does not disclose that the signals shown in Figures 12–15 use a high pass filter. *Id.*

Patent Owner also argues that "[a person of ordinary skill in the art] would not consider combining *Scherer* with *Suzuki* or any other prior art reference because they teach away from each other and the '565 patent." Prelim. Resp. 20. Patent Owner argues that the references teach away because "*Scherer* does not consider a stratified charge operation mode for a DISI engine as the '565 patent teaches and claims and *Scherer* teaches diesel engine control, which the '565 does not teach or even reference." *Id.* at 22. Patent Owner also argues that *Scherer* differs from the disclosure of the '565 patent in other ways. *Id.* at 22–24. Patent Owner emphasizes that Scherer does not teach high pass filtering an output of a comparator, as required by the challenged claims of the '565 patent. *Id.* at 23. Patent Owner concludes that "[c]ombining the teachings of *Scherer* and those of any one or more of the secondary references relied upon by Petitioner, even in hindsight, would result in a desired engine torque signal which is high-pass filtered, and a 'difference signal' which is not high-pass filtered." *Id.* at 24.

Petitioner argues that Patent Owner's observation that Scherer does not teach a high pass filter applied to a difference improperly attacks the teachings of the references individually. Pet. Reply 2–4. In combination,

not individually, Suzuki and Scherer render obvious applying a high pass filter to a difference signal, Petitioner emphasizes. *Id.*

Petitioner also argues that the references do not teach away. *Id.* at 4–6. Petitioner argues that for a reference to teach away, it must "criticize, discredit, or otherwise discourage the solution claimed." *Id.* at 4 (quoting *In re Fulton*, 391 F.3d 1195, 1201 (Fed. Cir. 2004)). Under this test, Petitioner asserts that Patent Owner does not identify any way in which the cited references teach away from the claimed invention of the '565 patent. *Id.* at 5–6.

In response, Patent Owner reiterates that neither Suzuki nor Scherer teaches high pass filtering a difference signal. Sur-reply 3–5. Patent Owner argues that if a person of ordinary skill in the art had considered combining the references' teachings, "the [person of ordinary skill in the art] would have been taught to 'high-pass filter' an input to a comparator that outputs a 'difference signal,' rather than filtering the 'difference signal.'" *Id.* at 4.

Weighing the parties' arguments and evidence, at this stage, we determine Petitioner has demonstrated a reasonable likelihood of prevailing on its assertion that claims 1 4, and 7 would have been obvious in view of Suzuki, Cullen, and Scherer. Petitioner identifies reasons associated with the references' teachings that a person of ordinary skill in the art would have for implementing Suzuki's torque estimator with the details disclosed by Cullen. Pet. 29–33, 44–48. At this stage, Patent Owner does not dispute Petitioner's assertions that it would have been obvious to combine Cullen's estimating strategy with Suzuki's disclosure. *See generally* Prelim. Resp. Our review of Petitioner's arguments and evidence persuades us that

Petitioner has shown adequately that it would have been obvious to combine the teachings of Cullen and Suzuki.

Regarding Petitioner's assertion that it would have been obvious to combine Scherer's high pass 4 filter with Suzuki's system, Petitioner explains why a person of ordinary skill in the art allegedly would have been motivated to combine the references' teachings. Specifically, Petitioner asserts that it would have been predictable that adding Scherer's high pass filter 4 to Suzuki would allow "adjusting the torque output with a quicker response time during transient engine operations." Pet. 36–37. At this stage, Patent Owner does not dispute this assertion. *See generally* Prelim. Resp.; Sur-reply.

Instead, Patent Owner argues that neither Scherer nor Suzuki specifically teaches applying a high pass filter to a difference signal. Prelim. Resp. 21–23. Patent Owner emphasizes that Scherer teaches its high pass filter 4 receives and filters a desired engine torque signal. *Id.* This results from Scherer's high pass filter 4 sitting immediately downstream of Scherer's engine torque coordination unit 1, which provides desired engine torque signal M_{des}. *See* Ex. 1007, 3:60–67; 4:40–45. In view of these teachings, Patent Owner suggests that the only possible obvious location and use of a high pass filter is downstream of an engine torque coordination unit to filter a desired torque signal. *See* Prelim. Resp. 24; Sur-reply 4.

This argument takes a myopic view of Scherer, overlooking a significant aspect identified by Petitioner, and attacking the references individually. Patent Owner's argument overlooks that Scherer's high pass filter 4 sits immediately upstream of the provisions for adjusting torque, such as the provisions for controlling spark to adjust torque, in the case of

Figure 1. *See* Ex. 1007, 4:53–5:9 ("The device for the ignition point adjustment receives the dynamic desired torque component (M_d) from the high pass filter 4, by way of an input-side dead zone unit 6 which suppresses very small ignition point changes."). Recognizing this aspect of Scherer's disclosure, Petitioner argues it would have been obvious to add high pass filter 4 to Suzuki immediately upstream of the provisions for adjusting torque, which would place high pass filter 4 downstream of Suzuki's comparator. *See* Pet. 37–38. Situated immediately upstream of the torque-adjusting provisions and immediately downstream of the comparator in Suzuki's system, high pass filter 4 would filter the difference signal generated by Suzuki's comparator. Thus, Petitioner provides a reasoned explanation of an allegedly obvious combination of the references that would high pass filter a torque difference signal, regardless of whether any of the references individually teaches high pass filtering a torque difference signal.[7]

Patent Owner's emphasis that Scherer teaches sending a desired engine torque signal to high pass filter 4 may support a conclusion that another obvious combination of the references' teachings would involve high pass filtering a desired engine torque signal. But, at this stage, it does not persuade us that the only possible obvious combination of the

[7] Because we are persuaded Petitioner has shown adequately for the purposes of institution that it would have been obvious to combine Scherer and Suzuki in a manner that would have a high pass filter applied to a torque difference signal, we need not resolve the issue of whether Suzuki itself suggests a high pass filter. Resolution of that highly factual issue may be more appropriately undertaken, if necessary, following the development of a fuller record during *inter partes* review.

references' teachings would have been high pass filtering a desired engine torque signal. *See Dome Patent L.P. v. Lee*, 799 F.3d 1372, 1381 (Fed. Cir. 2015) (noting possibility of multiple obvious combinations of prior art).

Additionally, at this stage, we do not agree with Patent Owner's arguments that the references teach away. Patent Owner highlights certain ways in which Scherer's disclosure differs from certain teachings of the '565 patent and Suzuki. *See* Prelim. Resp. 22–23. Patent Owner does not explain, however, a persuasive reason that the differences result in the references criticizing, discrediting, or otherwise discouraging use of the invention recited in the claims of the '565 patent. *See in re Fulton*, 391 F.3d 1195, 1201 (Fed. Cir. 2004). Also, Patent Owner's argument that Scherer has "no consideration of a stratified charge operation mode for a DISI engine as the '565 patent teaches and the challenged claims of the '565 require" is not commensurate in scope with claims 1 and 7, which do not require stratified charge operation.[8]

For the foregoing reasons, we find Petitioner has demonstrated a reasonable likelihood of prevailing on its assertion that claims 1, 4, and 7 would have been obvious over Suzuki, Cullen, and Scherer.

F. Alleged Obviousness of Claims 2, 3, 5, and 6 over Suzuki, Cullen, Scherer, and Takahashi

1. Overview of Takahashi

Takahashi "is related to the method and system for simultaneous control of the throttle valve and fuel injection to ensure that the torque and

[8] Regarding claim 4, which does require "stratified mode" (Ex. 1001, 4:35–36), Petitioner relies on Suzuki as teaching stratified mode. Pet. 61–65.

air fuel ratio of the automobile engine will reach target values." Ex. 1008, 1:6–9.

Takahashi shows one embodiment of its "simultaneous torque and air fuel ratio control system" in Figure 2, which is reproduced below.

FIG. 2

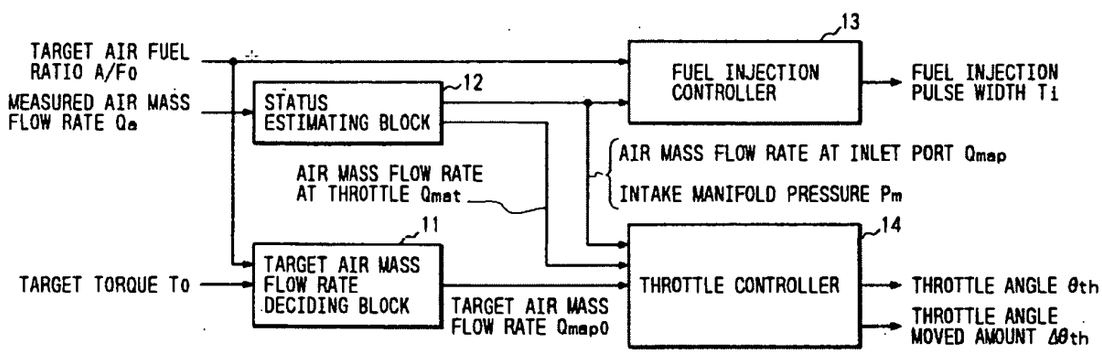

Figure 2 is a block diagram of simultaneous air fuel ratio and torque control with target air mass flow rate deciding block 11, status estimating block 12, fuel injection controller 13, and throttle controller 14.[9] *Id.* at 2:35–36, 3:16–29.

Target air mass flow rate deciding block 11 determines a target air mass flow rate based on target torque T_0, engine speed N, target air fuel ratio

[9] One portion of the text of Takahashi refers to "target air mass flow rate deciding block 15." Ex. 1008, 3:22–23. This appears to be a typographical error. It appears that the text should refer to "target air mass flow rate deciding block 11." In Figure 2, reference numeral 11 is used to identify "TARGET AIR MASS FLOW RATE DECIDING BLOCK 11." Additionally, another portion of the text of Takahashi states that "[b]lock 11 calculates the target air mass flow rate." *Id.* at 3:28.

A/F_0, spark advance θ_{adv}, constant K, and specified functions F_1, F_2, F_3. *Id.* at 3:28–40.

Takahashi describes the operation of status estimating block 12 in more detail with reference to Figure 3, which is reproduced below.

FIG. 3

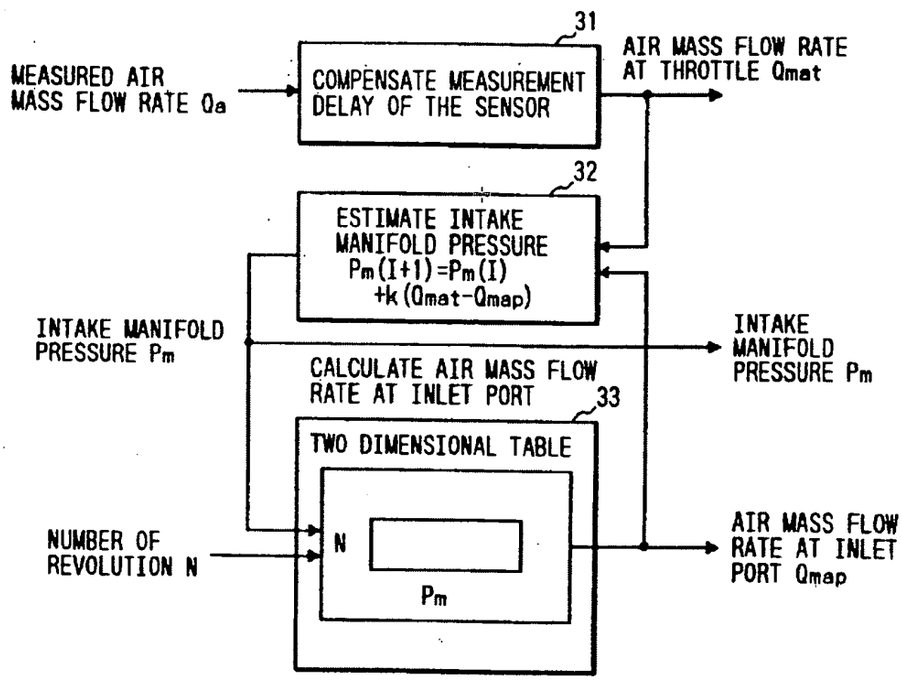

Figure 3 is a block diagram of the status estimating block, which includes blocks 31–33. *Id.* at 2:37–38, Fig. 3. Takahashi explains that

> In block 31, measured air mass flow rate Q_a is subjected to the response delay compensation for the air mass flow sensor. Namely, the air mass flow rate at throttle Q_{mat} is calculated and updated from measured air mass flow rate Q_a according to [an equation using certain variables].

Id. at 4:6–39. Takahashi also explains that

> In block 32, intake manifold pressure Pm calculated from the air mass flow rate at throttle Q_{mat} which is calculated in block 31,

> and air mass flow rate at inlet port Q_{map} which is calculated by searching the table 33 according to [an equation using certain variables].

Id. at 4:49–68. Takahashi further explains that "[b]lock 33 calculates the air mass flow rate at inlet port Q_{map} by searching the two dimensional table for the intake manifold pressure and engine speed, where the data on air mass flow rate taken in during engine operation in the stationary status are stored." *Id.* at 5:1–5.

Takahashi discusses fuel injection control in greater detail in connection with Figure 4, which is reproduced below.

FIG. 4

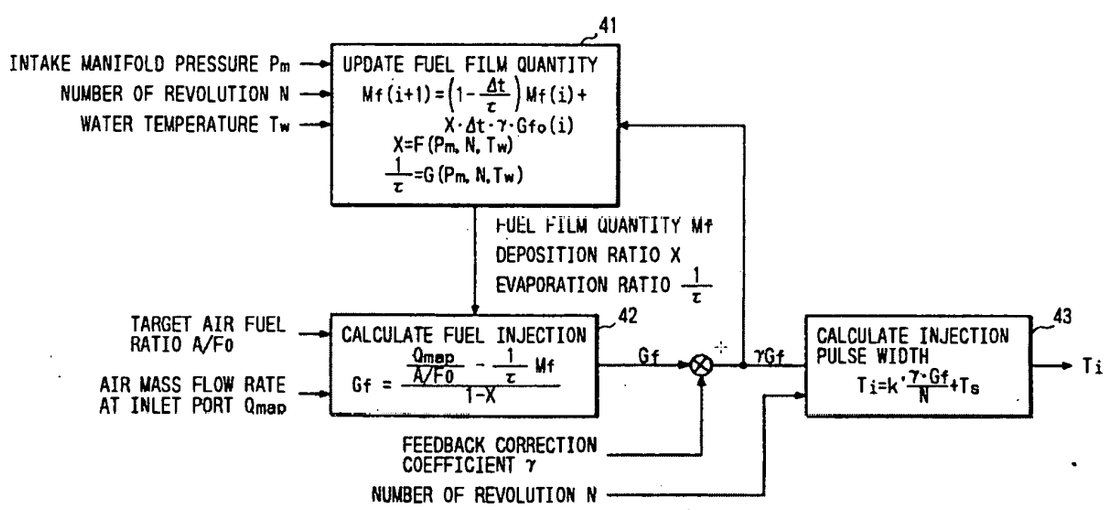

Figure 4 is a block diagram of the fuel injection control system, which includes blocks 41–43. *Id.* at 2:39–40, Fig. 4. Takahashi explains that "[b]lock 41 calculates the deposition ratio X of the injected fuel onto the intake manifold and evaporation ratio ($1/\tau$) of deposited fuel according to [certain expressions]." *Id.* at 5:12–15. Takahashi also explains that "block 42 calculates the fuel injection quantity using the value calculated in block

41 according to [a certain expression]." *Id.* at 5:53–55. Based on another equation, the fuel injection pulse width Ti is calculated by block 43.[10] *Id.* at 5:66–6:9.

Takahashi discusses throttle control in greater detail with reference to Figure 5, which is reproduced below.

FIG. 5

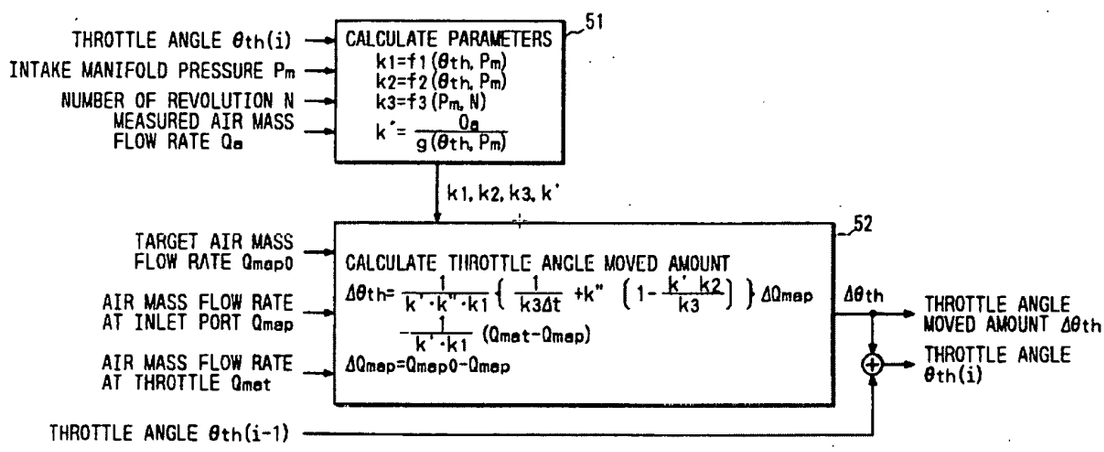

Figure 5 is a block diagram of the throttle control system, which includes blocks 51 and 52. *Id.* at 2:41–42; Fig. 5. Takahashi explains that "[b]lock 51 calculates the said various parameters. In block 52, throttle angle moved amount $\Delta\theta_{th}$ is calculated from the calculated parameters. Further, throttle angle move amount $\Delta\theta_{th}$ is added to the throttle angle θ_{th} (i – 1) one time unit before, thereby calculating the current throttle angle θ(i)." *Id.* at 7:62–68.

Takahashi discusses another embodiment "which detects the air mass flow rate indirectly from the measured intake manifold pressure." *Id.* at

---

[1010] Although the text states that "[b]lock 42 calculates the fuel injection pulse width Ti," this appears to be a typographical error, given that block 43 in Figure 4 includes the text "CALCULATE INJECTION PULSE WIDTH."

10:32–35. In connection with this disclosure, Takahashi presents Figure 14, which is reproduced below. *Id.* at 10:42–44.

FIG. 14

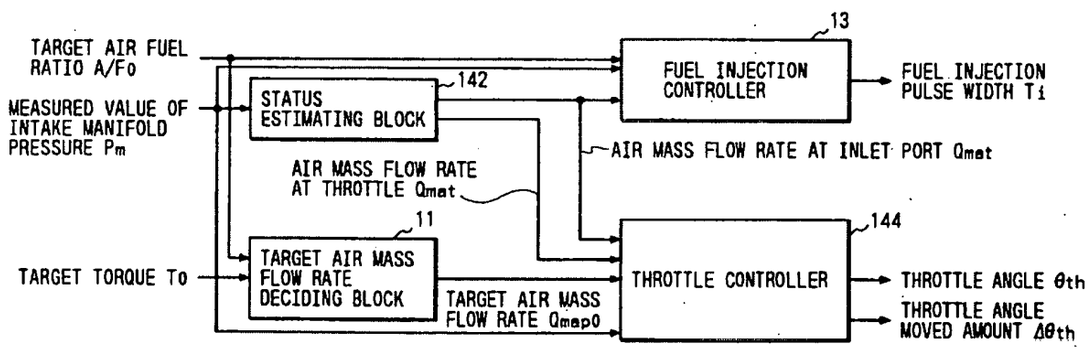

Figure 14 "is a block diagram of simultaneously controlling air-fuel ratio and torque, in said engine control system having a pressure sensor." *Id.* at 2:62–64. Takahashi explains that "[t]he target air fuel ratio, target torque and intake manifold pressure are input as major input signals, thereby calculating the fuel injection pulse, throttle angle and throttle angle moved amount." *Id.* at 10:44–47. In connection with this embodiment, Takahashi further discusses the status estimating block in more detail in connection with Figure 15, which is reproduced below.

FIG. 15

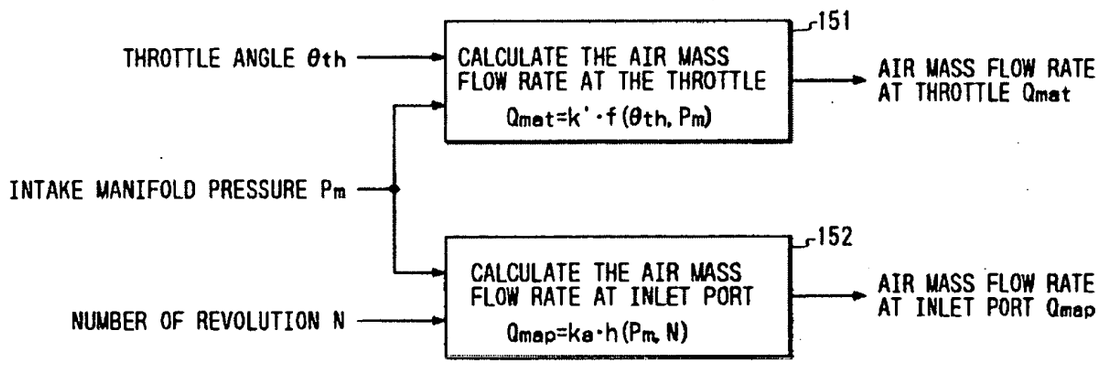

Figure 15 "is a block diagram of the status estimating block in FIG. 14." *Id.* at 2:65–66. Takahashi explains that

> Block 151 calculates the air mass flow rate at the throttle from the throttle angle and detected intake manifold pressure according to the Expression 12. Block 152 calculates the air mass flow rate at the inlet port from the intake manifold pressure and the detected engine speed according to [a certain expression].

Id. at 10:51–57.

2. Discussion

Claim 2 depends from claim 1, and claim 3 depends from claim 2. Ex. 1001, 4:23–28. Claim 5 depends from claim 4, and claim 6 depends from claim 5. *Id.* at 4:45–50. In addition to the limitations of independent claim 1, claim 2 recites "wherein the estimated air charge signal is produced by an air charge controller which receives as inputs an air charge demand signal, a throttle position signal, an engine speed signal, a manifold pressure signal and an air charge temperature signal." *Id.* at 4:23–26. Claim 3 adds that "the air charge demand signal is produced by an air charge demand controller which receives as inputs the desired torque signal, a desired spark

angle signal and a desired air/fuel ratio." *Id.* at 4:27–30.[11] Claims 5 and 6 contain the same limitations as claims 2 and 3, respectively. *Compare id.* at 4:23–30, *with id.* at 4:45–53.

Building on the challenge of claims 1 and 4 as obvious over Suzuki, Cullen, and Scherer, Petitioner cites Takahashi in combination with Suzuki, Cullen, and Scherer as teaching the limitations added by claims 2 3, 5, and 6. Pet. 77–88. Petitioner cites Takahashi, for example, as teaching status estimating block 142 and throttle controller 144 (Figure 14), which Petitioner contends correspond to the "air charge controller" recited in claim 2. *Id.* at 80–83. Petitioner asserts that Takahashi teaches performing its engine control based on the specific parameters recited in claims 2, 3, 5, and 6. *Id.* at 77–88. Petitioner asserts that it would have been obvious to implement these aspects of Takahashi's teachings with the teachings of Suzuki, Cullen, and and Scherer. *Id.* For example, Petitioner asserts that a person of ordinary skill in the art would have found it obvious "to modify Suzuki's torque control section to receive as signal inputs an air charge demand, a throttle position, an engine speed, a manifold pressure, and an air charge temperature so that Suzuki's control unit 20 estimates the cylinder air charge more accurately." *Id.* at 83. Petitioner elaborates that "a [person of ordinary skill in the art] would have been motivated to combine the teachings of Takahashi with Suzuki (and Cullen and Scherer) so that the control unit converges the engine output torque to the demand torque more precisely." *Id.* at 84.

[11] The Certificate of Correction on page 7 of Exhibit 1001 clarifies that the word "ratio" appears before the period.

At this stage, Patent Owner does not dispute Petitioner's challenge of claims 2, 3, 5, and 6 as allegedly obvious over Suzuki, Cullen, Scherer, and Takahashi separately from the challenge of independent claims 1, 4, and 7 as allegedly obvious over Suzuki, Cullen, and Scherer. *See generally* Prelim. Resp.

Our review of Petitioner's arguments and evidence persuades us that Petitioner has demonstrated a reasonable likelihood of prevailing on its challenge of claims 2, 3, 5, and 6 as allegedly obvious over Suzuki, Cullen, Scherer, and Takahashi.

III. CONCLUSION

Based on the evidence before us, we determine that Petitioner has demonstrated a reasonable likelihood of prevailing at least on its assertion that claims 1–7 of the '565 patent are unpatentable. Accordingly, we institute trial on all the challenges in the Petition.

At this stage of the proceeding, the Board has not made a final determination on the construction of any claim term or the patentability of any challenged claim.

IV. ORDER

Upon consideration of the record before us, it is:

ORDERED that, pursuant to 35 U.S.C. § 314(a), an *inter partes* review of claims 1–7 of the '565 patent is instituted with respect to all grounds set forth in the Petition; and

FURTHER ORDERED that, pursuant to 35 U.S.C. § 314(c) and 37 C.F.R. § 42.4(b), *inter partes* review of the '565 patent shall commence on the entry date of this Order, and notice is hereby given of the institution of a trial.

IPR2020-00444
Patent 6,581,565 B2

PETITIONER:

Michael Specht
Mspecht-ptab@sternekessler.com

Jason Fitzsimmons
Jfitzsimmons-ptab@sternekessler.com

Daniel Yonan
Dyonan-ptab@sternekessler.com

Kyle Conklin
Kconklin-ptab@sternekessler.com

John Higgins
Jhiggins-ptab@sternekessler.com

PATENT OWNER:

Timothy Devlin
Td-ptab@devlinlawfirm.com

Robyn Williams
rwilliams@devlinlawfirm.com

UNITED STATES PATENT AND TRADEMARK OFFICE

BEFORE THE PATENT TRIAL AND APPEAL BOARD

VOLKSWAGEN GROUP OF AMERICA, INC.,
Petitioner,

v.

MICHIGAN MOTOR TECHNOLOGIES LLC,
Patent Owner.

IPR2020-00444
Patent 6,581,565 B2

Before NEIL T. POWELL, SCOTT B. HOWARD, and
SEAN P. O'HANLON, *Administrative Patent Judges.*

POWELL, *Administrative Patent Judge*.

SCHEDULING ORDER

A. GENERAL INSTRUCTIONS

1. Initial and Additional Conference Calls

The parties are directed to contact the Board within a month of this Order if there is a need to discuss proposed changes to this Scheduling Order or proposed motions that have not been authorized in this Order or other prior Order or Notice. *See* Consolidated Trial Practice Guide ("Consolidated Practice Guide")[1] at 9–10, 65 (guidance in preparing for a conference call); *see also* 84 Fed. Reg. 64,280 (Nov. 21, 2019). A request for an initial conference call shall include a list of proposed motions, if any, to be discussed during the call.

The parties may request additional conference calls as needed. Any email requesting a conference call with the Board should: (a) copy all parties, (b) indicate generally the relief being requested or the subject matter of the conference call, (c) include multiple times when all parties are available, (d) state whether the opposing party opposes any relief requested, and (e) if opposed, either certify that the parties have met and conferred telephonically or in person to attempt to reach agreement, or explain why such meet and confer did not occur. The email may not contain substantive argument and, unless otherwise authorized, may not include attachments. *See* Consolidated Practice Guide at 9–10.

2. Protective Order

No protective order shall apply to this proceeding until the Board enters one. If either party files a motion to seal before entry of a protective order, a jointly proposed protective order shall be filed as an exhibit with the

[1] Available at https://www.uspto.gov/TrialPracticeGuideConsolidated.

motion. It is the responsibility of the party whose confidential information is at issue, not necessarily the proffering party, to file the motion to seal.[2] The Board encourages the parties to adopt the Board's default protective order if they conclude that a protective order is necessary. *See* Consolidated Practice Guide at 107–122 (App. B, Protective Order Guidelines and Default Protective Order). If the parties choose to propose a protective order deviating from the default protective order, they must submit the proposed protective order jointly along with a marked-up comparison of the proposed and default protective orders showing the differences between the two and explain why good cause exists to deviate from the default protective order.

The Board has a strong interest in the public availability of trial proceedings. Redactions to documents filed in this proceeding should be limited to the minimum amount necessary to protect confidential information, and the thrust of the underlying argument or evidence must be clearly discernible from the redacted versions. We also advise the parties that information subject to a protective order may become public if identified in a final written decision in this proceeding, and that a motion to expunge the information will not necessarily prevail over the public interest in maintaining a complete and understandable file history. *See* Consolidated Practice Guide at 21–22.

3. Discovery Disputes

The Board encourages parties to resolve disputes relating to discovery on their own. To the extent that a dispute arises between the parties relating to discovery, the parties must meet and confer to resolve such a dispute

[2] If the entity whose confidential information is at issue is not a party to the proceeding, please contact the Board.

before contacting the Board. If attempts to resolve the dispute fail, a party may request a conference call with the Board.

4. Testimony

The parties are reminded that the Testimony Guidelines appended to the Consolidated Practice Guide at 127–130 (App. D, Testimony Guidelines) apply to this proceeding. The Board may impose an appropriate sanction for failure to adhere to the Testimony Guidelines. 37 C.F.R. § 42.12. For example, reasonable expenses and attorneys' fees incurred by any party may be levied on a person who impedes, delays, or frustrates the fair examination of a witness.

5. Cross-Examination

Except as the parties might otherwise agree, for each due date: Cross-examination ordinarily takes place after any supplemental evidence is due. 37 C.F.R. § 42.53(d)(2).

Cross-examination ordinarily ends no later than a week before the filing date for any paper in which the cross-examination testimony is expected to be used. *Id.*

6. Motion to Amend

Patent Owner may file a motion to amend without prior authorization from the Board. Nevertheless, Patent Owner must confer with the Board before filing such a motion. 37 C.F.R. § 42.121(a). To satisfy this requirement, Patent Owner should request a conference call with the Board no later than two weeks prior to DUE DATE 1. *See* Section B below regarding DUE DATES.

Patent Owner has the option to receive preliminary guidance from the Board on its motion to amend. *See* Notice Regarding a New Pilot Program

Concerning Motion to Amend Practice and Procedures in Trial Proceedings under the America Invents Act before the Patent Trial and Appeal Board, 84 Fed. Reg. 9497 (Mar. 15, 2019) ("MTA Pilot Program Notice"); *see also* Consolidated Practice Guide at 67. If Patent Owner elects to request preliminary guidance from the Board on its motion, it must do so in its motion to amend filed on DUE DATE 1.

Any motion to amend and briefing related to such a motion shall generally follow the practices and procedures described in MTA Pilot Program Notice unless otherwise ordered by the Board in this proceeding. The parties are further directed to the Board's Guidance on Motions to Amend in view of *Aqua Products* (https://go.usa.gov/xU6YV), and *Lectrosonics, Inc. v. Zaxcom, Inc.*, IPR2018-01129, Paper 15 (PTAB Feb. 25, 2019) (precedential).

At DUE DATE 3, Patent Owner has the option to file a reply to the opposition to the motion to amend and preliminary guidance, or a revised motion to amend. *See* MTA Pilot Program Notice at 9500–01. Patent Owner may elect to file a revised motion to amend even if Patent Owner did not request to receive preliminary guidance on its motion to amend. A revised motion to amend must provide amendments, arguments, and/or evidence in a manner that is responsive to issues raised in the preliminary guidance and/or Petitioner's opposition.

If Patent Owner files a revised motion to amend, the Board shall enter a revised scheduling order setting the briefing schedule for that revised motion and adjusting other due dates as needed. *See* MTA Pilot Program Notice at 9501, App. 1B.

As also discussed in the MTA Pilot Program Notice, if the Board issues preliminary guidance on the motion to amend, and Patent Owner files neither a reply to the opposition to the motion to amend nor a revised motion to amend at DUE DATE 3, Petitioner may file a reply to the Board's preliminary guidance, no later than three (3) weeks after DUE DATE 3. The reply may only respond to the preliminary guidance. Patent Owner may file a sur-reply in response to Petitioner's reply to the Board's preliminary guidance. The sur-reply may only respond to arguments made in the reply and must be filed no later than three (3) weeks after Petitioner's reply. *See* MTA Pilot Program Notice at 9502. No new evidence may accompany the reply or the sur-reply in this situation.

7. Oral Argument

Requests for oral argument must comply with 37 C.F.R. § 42.70(a). To permit the Board sufficient time to schedule the oral argument, the parties may not stipulate to an extension of the request for oral argument beyond the date set forth in the Due Date Appendix.

Unless the Board notifies the parties otherwise, oral argument, if requested, will be held at the USPTO headquarters in Alexandria. The parties may request that the oral argument instead be held at any USPTO Regional Office. The parties should meet and confer, and jointly propose the parties' preference at the initial conference call, if requested. Alternatively, the parties may jointly file a paper stating their preference for the hearing location within one month of this Order. Note that the Board may not be able to honor the parties' preference of hearing location due to, among other things, the availability of hearing room resources and the needs

of the panel. The Board will consider the location request and notify the parties accordingly if a request for change in location is granted.

Seating in the Board's hearing rooms may be limited, and will be available on a first-come, first-served basis. If either party anticipates that more than five (5) individuals will attend the argument on its behalf, the party should notify the Board as soon as possible, and no later than the request for oral argument. Parties should note that the earlier a request for accommodation is made, the more likely the Board will be able to accommodate additional individuals..

B. DUE DATES

This Order sets due dates for the parties to take action after institution of the proceeding. The parties may stipulate different dates for DUE DATES 1, 5, and 6, as well as the portion of DUE DATE 2 related to Petitioner's reply (earlier or later, but no later than DUE DATE 3 for Patent Owner's sur-reply) and the portion of DUE DATE 3 related to Patent Owner's sur-reply (earlier or later, but no later than DUE DATE 7). The parties may not stipulate to a different date for the portion of DUE DATE 2 related to Petitioner's opposition to a motion to amend, or for the portion of DUE DATE 3 related to Patent Owner's reply to an opposition to a motion to amend (or Patent Owner's revised motion to amend) without prior authorization from the Board. In stipulating to move any due dates in the scheduling order, the parties must be cognizant that the Board requires four weeks after the filing of an opposition to the motion to amend (or the due date for the opposition, if none is filed) for the Board to issue its preliminary guidance, if requested by Patent Owner. A notice of the stipulation,

specifically identifying the changed due dates, must be promptly filed. The parties may not stipulate an extension of DUE DATES 4, 7, and 8.

In stipulating different times, the parties should consider the effect of the stipulation on times to object to evidence (37 C.F.R. § 42.64(b)(1)), to supplement evidence (§ 42.64(b)(2)), to conduct cross-examination (§ 42.53(d)(2)), and to draft papers depending on the evidence and cross-examination testimony.

1. DUE DATE 1

Patent Owner may file—

a. A response to the petition (37 C.F.R. § 42.120). If Patent Owner elects not to file a response, Patent Owner must arrange a conference call with the parties and the Board. Patent Owner is cautioned that any arguments not raised in the response may be deemed waived.

b. A motion to amend the patent (37 C.F.R. § 42.121).

2. DUE DATE 2

Petitioner may file a reply to the Patent Owner's response.

Petitioner may file an opposition to the motion to amend.

3. DUE DATE 3

Patent Owner may file a sur-reply to Petitioner's reply.

Patent Owner may also file either:

a. a reply to the opposition to the motion to amend and/or preliminary guidance (if provided); or

b. a revised motion to amend.

NOTE: If Patent Owner files neither of the above papers (a reply to the opposition or a revised motion to amend), and the Board has issued preliminary guidance, Petitioner may file a reply to the preliminary

guidance, no later than three (3) weeks after DUE DATE 3. Patent Owner may file a sur-reply to Petitioner's reply to the preliminary guidance no later than three (3) weeks after Petitioner's reply.

4. DUE DATE 4

Either party may file a request for oral argument (may not be extended by stipulation).

5. DUE DATE 5

Petitioner may file a sur-reply to Patent Owner's reply to the opposition to the motion to amend.

Either party may file a motion to exclude evidence (37 C.F.R. § 42.64(c)).

6. DUE DATE 6

Either party may file an opposition to a motion to exclude evidence.

Either party may request that the Board hold a pre-hearing conference.

7. DUE DATE 7

Either party may file a reply to an opposition to a motion to exclude evidence.

8. DUE DATE 8

The oral argument (if requested by either party) shall be held on this date. Approximately one month prior to the argument, the Board will issue an order setting the start time of the hearing and the procedures that will govern the parties' arguments.

DUE DATE APPENDIX

DUE DATE 1 ..... October 29, 2020

Patent Owner's response to the petition

Patent Owner's motion to amend the patent

DUE DATE 2 ..... January 21, 2021

Petitioner's reply to Patent Owner's response to petition

Petitioner's opposition to motion to amend

DUE DATE 3 ..... March 4, 2021

Patent Owner's sur-reply to reply

Patent Owner's reply to opposition to motion to amend
(or Patent Owner's revised motion to amend)

DUE DATE 4 ..... March 25, 2021

Request for oral argument (may not be extended by stipulation)

DUE DATE 5 ..... April 15, 2021

Petitioner's sur-reply to reply to opposition to motion to amend

Motion to exclude evidence

DUE DATE 6 ..... April 22, 2021

Opposition to motion to exclude

Request for prehearing conference

DUE DATE 7 ..... April 29, 2021

Reply to opposition to motion to exclude

DUE DATE 8 ..... May 12, 2021

Oral argument (if requested)

PETITIONER:

Michael Specht
Mspecht-ptab@sternekessler.com

Jason Fitzsimmons
Jfitzsimmons-ptab@sternekessler.com

Daniel Yonan
Dyonan-ptab@sternekessler.com

Kyle Conklin
kconklin-ptab@sternekessler.com

Stephen Merrill
smerrill-ptab@sternekessler.com

PATENT OWNER:

Timothy Devlin
Td-ptab@devlinlawfirm.com

UNITED STATES PATENT AND TRADEMARK OFFICE

BEFORE THE PATENT TRIAL AND APPEAL BOARD

VOLKSWAGEN GROUP OF AMERICA, INC.,
Petitioner,

v.

MICHIGAN MOTOR TECHNOLOGIES LLC,
Patent Owner.

IPR2020-00444
Patent 6,581,565 B2

Before NEIL T. POWELL, SCOTT B. HOWARD, and
SEAN P. O'HANLON, *Administrative Patent Judges*.

POWELL, *Administrative Patent Judge*.

DECISION
Granting Institution of *Inter Partes* Review
35 U.S.C. § 314

I. INTRODUCTION

A. Background

Volkswagen Group of America, Inc. ("Petitioner") filed a Petition (Paper 2, "Pet.") to institute an *inter partes* review of claims 1–7 of U.S. Patent No. 6,581,565 B2 (Ex. 1001, "the '565 patent"). Michigan Motor Technologies LLC ("Patent Owner") filed a Preliminary Response. Paper 7 ("Prelim. Resp."). Pursuant to our authorization, Petitioner filed a Reply (Paper 9, "Pet. Reply"), and Patent Owner filed a Sur-reply (Paper 10, "Sur-reply").

We have authority to determine whether to institute an *inter partes* review. 35 U.S.C. § 314(b) (2018); 37 C.F.R. § 42.4(a) (2020). We may not institute an *inter partes* review "unless . . . there is a reasonable likelihood that the petitioner would prevail with respect to at least 1 of the claims challenged in the petition." 35 U.S.C. § 314(a). The Supreme Court has held that a decision to institute under 35 U.S.C. § 314 may not institute review on less than all claims challenged in the petition. *SAS Inst. Inc. v. Iancu*, 138 S. Ct. 1348, 1355–56 (2018). Moreover, if the PTAB institutes a trial, the PTAB will institute on all challenges raised in the petition. *See* Patent Trial and Appeal Board Consolidated Trial Practice Guide ("CTPG") 64 (Nov. 2019), https://www.uspto.gov/sites/default/files/documents/tpgnov.pdf ("The Board will not institute on fewer than all claims or all challenges in a petition.").

Applying those standards, and upon consideration of the information presented in the Petition, we determine that Petitioner has established a reasonable likelihood of success in proving that at least one claim of the '565 patent is unpatentable. Accordingly, we institute an *inter partes* review

as to all challenged claims of the ’565 patent on all grounds raised in the Petition. We base our factual findings and conclusions at this stage of the proceeding on the evidentiary record developed so far. This is not a final decision as to the construction of any claim term or the patentability of any claim.

B. Related Proceeding

The parties identify the following matter as related to the ’565 patent (Pet. 2; Paper 5, 2):

> *Michigan Motor Technologies LLC v. Volkswagen AG*, No. 2:19-cv-10485 (E.D. Mich.).

Additionally, in IPR2020-00445, Petitioner has filed another petition challenging claims 1–7 of the ’565 patent. Pet. 2.

C. The ’565 Patent

The ’565 patent relates to torque control for internal combustion engines. Ex. 1001, code (57). The ’565 patent describes an exemplary engine in connection with Figure 1, which is reproduced below.

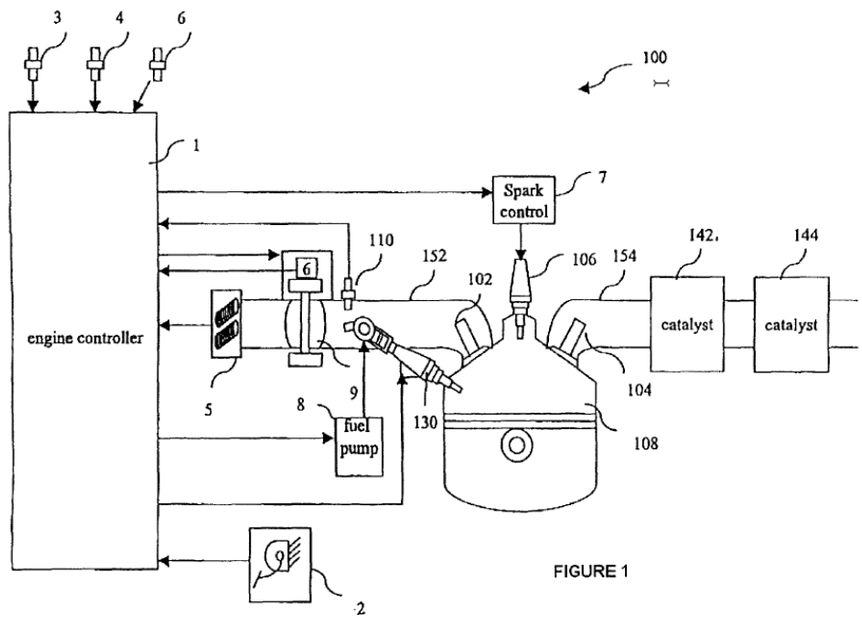

Figure 1 shows direct injection spark ignition engine 100, which includes air intake valve 102, exhaust valve 104, spark plug 106, combustion chamber 108, manifold absolute pressure sensor 110, fuel injector 130, three way catalytic converter 142, Nox trap/catalyst 144, air-intake manifold 152, and exhaust manifold 154. *Id.* at 2:40–56.

Direct injection spark ignition engine 100 also includes engine controller 1. *Id.* at 2:40–42. Accelerator pedal and sensor assembly 2, engine speed sensor 3, engine temperature sensor 4, air charge temperature sensor 5, manifold absolute pressure sensor 110, and throttle position indicator 6 all provide signals to engine controller 1. *Id.* at 2:42–46.

Air and fuel mix in combustion chamber 108. *Id.* at 2:47–49. Throttle 9 controls an air charge, which travels via intake manifold 152 through intake air valve 102. *Id.* at 2:48–50. Fuel injector 130 injects the fuel into combustion chamber 108 directly. *Id.* at 2:47–48.

Spark control unit 7 operates spark plug 106 to produce a spark for igniting the air/fuel mixture. *Id.* at 2:51–53. The resulting combustion produces exhaust gases, which exit through exhaust valve 104 to exhaust manifold 154. *Id.* at 2:53–55.

The '565 patent discusses calculating a desired output torque in connection with Figure 2, which is reproduced below.

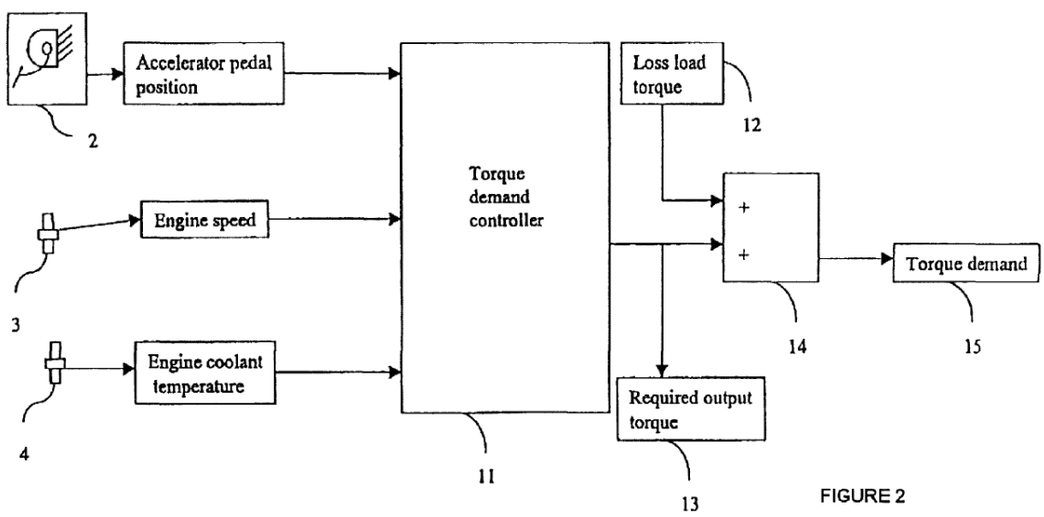

FIGURE 2

Figure 2 is a block diagram showing torque demand controller 11, which forms part of engine controller 1. *Id.* at 2:34–35, 2:57–58.

Torque demand controller 11 receives various signals and outputs torque demand signal 15. *Id.* at 2:58–67. Torque demand controller 11 receives an accelerator pedal position signal from accelerator pedal and sensor assembly 2, an engine speed signal from engine speed sensor 3, and an engine temperature signal from engine temperature sensor 4. *Id.* at 2:59–63. Based on these inputs, torque demand controller 11 determines required output torque signal 13, to which loss torque load signal 12 is added, which produces torque demand signal 15. *Id.* at 2:57–67.

The ’565 patent discusses how the torque demand signal is used in connection with Figure 3, which is reproduced below.

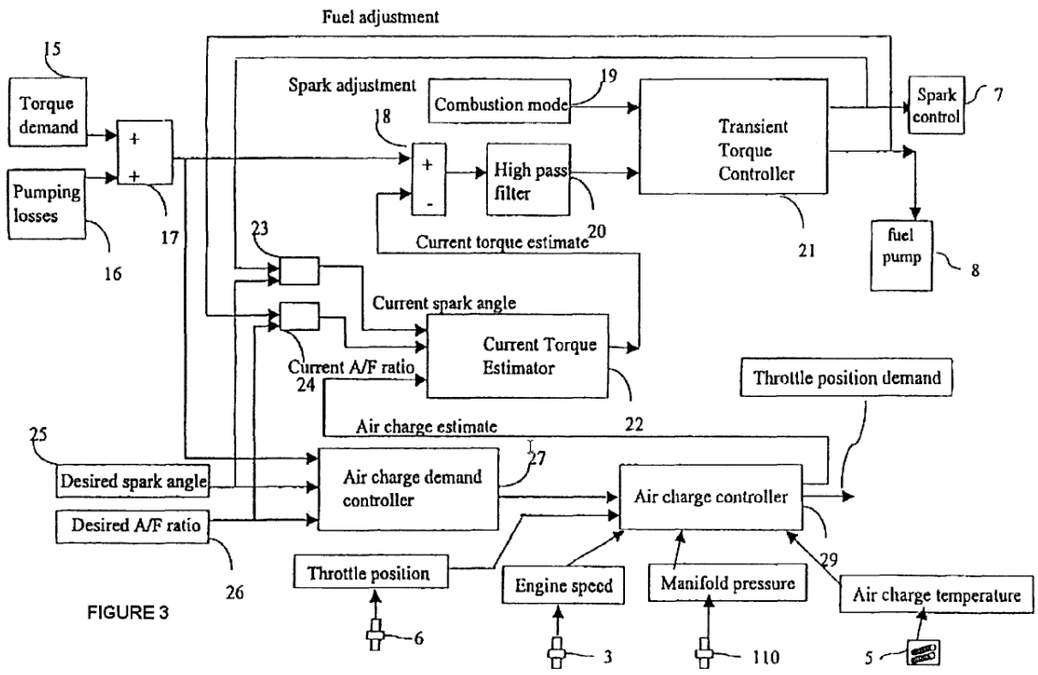

FIGURE 3

Figure 3 “is a block diagram of a torque producer.” *Id.* at 2:36.

The torque producer of Figure 3 includes adder 17. *Id.* at 3:1–6. Adder 17 receives torque demand signal 15, as well as pumping losses signal 16, “which represents losses due to the inherent losses in the engine cycle.” *Id.* at 3:1–4. Adder 17 generates a desired torque signal.

Air charge demand controller 27 receives the desired torque signal generated by adder 17, as well as desired spark angle signal 25 and desired air fuel ratio signal 26. *Id.* at 3:7–9. Air charge demand controller 27 produces an air charge demand signal, which it provides to air charge controller 29. *Id.* at 3:13–15.

Based on the air charge demand signal and various other inputs, air charge controller 29 provides multiple outputs. *Id.* at 3:13–22. Air charge controller 29 sends a desired throttle position signal to throttle 9. *Id.* at

3:19–21. Air charge controller 29 also produces "a signal representing an estimate of the air charge." *Id.* at 3:19–22.

Current torque estimator 22 receives the air charge estimate signal, along with a signal representing the current air/fuel ratio and a signal representing the current spark angle. *Id.* at 3:27–33. Based on these signals, current torque estimator 22 produces "a signal representing an estimate of the current torque." *Id.* at 3:29–33.

Comparator 18 compares the estimate of the current torque to the desired torque signal, producing an error signal. *Id.* at 3:34–36. High pass filter 20 filters the error signal. *Id.*

Transient torque controller 21 uses the filtered error signal "to generate signals for temporarily adjusting the torque produced by the engine 100." *Id.* at 3:36–39. Depending on whether combustion mode signal 19 indicates engine 100 is operating in stratified mode or homogeneous mode, either a fuel adjustment signal is generated to adjust fueling, or a spark adjustment signal is generated to adjust spark timing. *Id.* at 3:40–50.

D. Illustrative Claim

The '565 patent includes seven claims, all of which are challenged. Claims 1 and 7 are independent. Claims 2–6 depend, directly or indirectly, from claim 1. Claim 1 is illustrative and reproduced below.

> 1. A device for controlling a torque output of an engine, the device comprising:
> a torque demand controller for generating a torque demand signal; and
> a torque producer which receives the torque demand signal, the torque producer includes:
> an estimator which receives as inputs a current spark angle signal, a current air/fuel ratio signal and an

estimated air charge signal and outputs an estimated torque signal;

a comparator which receives as inputs the estimated torque signal and a desired torque signal and outputs a difference signal;

a high pass filter which receives as an input the difference signal and outputs a filtered difference signal in which low frequency components are absent; and

a transient torque controller which receives as an input the filtered difference signal and outputs a fuel adjustment signal and a spark adjustment signal.

Id. at 4:2–22.

E. Applied References

Petitioner relies upon the following references:

Kelsuke Suzuki et al., U.S. Patent No. 6,006,717 (Ex. 1005, "Suzuki"), issued Dec. 28, 1999.

Michael J. Cullen et al., U.S. Patent No. 5,241,855 (Ex. 1006, "Cullen"), issued Sept. 7, 1993.

Matthias Scherer et al., U.S. Patent No. 6,047,681 (Ex. 1007, "Scherer"), issued Apr. 11, 2000.

Shinsuke Takahashi et al., U.S. Patent No. 5,282,449 (Ex. 1008, "Takahashi"), issued Feb. 1, 1994.

Pet. 4–5. Petitioner also relies upon the Declaration of C. Arthur MacCarley, Ph.D., PE. Ex. 1003. Patent Owner relies on the Declaration of Russell A. Leonard, Jr., Ph.D. Ex. 2001.

F. Asserted Grounds of Unpatentability

Petitioner challenges the patentability of claims 1–7 of the '565 patent based on the following grounds. Pet. 5.

Claims Challenged	35 U.S.C. §	Reference(s)/Basis
1, 4, 7	103[1]	Suzuki, Cullen, Scherer
2, 3, 5, 6	103	Suzuki, Cullen, Scherer, Takahashi

II. ANALYSIS

A. Level of Ordinary Skill in the Art

Petitioner contends that a person having ordinary skill in the art at the time of the invention ("POSA") would have had "a B.S. degree in Electrical Engineering or Mechanical Engineering (or equivalent), as well as at least 2–4 years of academic or industry experience in the relevant field of engine control systems." Pet. 16 (citing Ex. 1003 ¶¶ 40–41).

Patent Owner contends that a person having ordinary skill in the art at the time of the invention is "a person with (1) a B.S. in mechanical engineering or a closely related field with three or more years of experience in either engine systems or engine control systems or (2) at least a M.S. in mechanical engineering." Prelim. Resp. 12–13 (citing Ex. 2001 ¶ 14.)

Thus, both parties propose substantially similar definitions of the level of ordinary skill in the art, both requiring a bachelor's degree in mechanical engineering or the equivalent with either a few years of industry or academic (such as that required to obtain a master's degree in mechanical engineering) experience. At this stage, we find Petitioner's description to be more consistent with the disclosures of the '565 patent and the prior art of record, as it is focused on the field of engine control systems. *See* Ex. 1001, 1:6–8

[1] The Leahy-Smith America Invents Act ("AIA"), Pub. L. No. 112-29, 125 Stat. 284, 287–88 (2011), amended 35 U.S.C. § 103. Because the '565 patent was filed before March 16, 2013, the effective date of the relevant amendment, the pre-AIA version of § 103 applies.

("This invention relates to an engine torque controller for spark ignition engines . . . ."); Ex. 1005, 1:4–6 ("This invention is directed to a direct-injection spark-ignition type engine control apparatus for correcting engine torque based on engine operating conditions."); Ex. 1006, 1:7–8 ("This invention relates to engines and in particular to inferring the torque produced by an engine."); Ex. 1007, code (57) ("The invention provides a process and an apparatus for controlling the engine torque of an internal-combustion engine."). Accordingly, we adopt Petitioner's definition as our own for purposes of this Decision. *See, e.g.*, *In re GPAC Inc.*, 57 F.3d 1573, 1579 (Fed. Cir. 1995).[2]

B. Claim Construction

We construe claims "using the same claim construction standard that would be used to construe the claim in a civil action under 35 U.S.C. 282(b), including construing the claim in accordance with the ordinary and customary meaning of such claim as understood by one of ordinary skill in the art and the prosecution history pertaining to the patent." 37 C.F.R. § 42.100(b); *see also Phillips v. AWH Corp.*, 415 F.3d 1303 (Fed. Cir. 2005) (en banc).

In this context, claim terms "are generally given their ordinary and customary meaning" as understood by a person of ordinary skill in the art in question at the time of the invention. *Phillips*, 415 F.3d at 1312–13; *see also CCS Fitness, Inc. v. Brunswick Corp.*, 288 F.3d 1359, 1366 (Fed. Cir.

[2] If Patent Owner argues a different level of ordinary skill in the art in its Response, the parties are encouraged to address whether there are any material differences between the two proposals and what impact, if any, the different level has on the obviousness analysis.

2002) (There is "a 'heavy presumption' that a claim term carries its ordinary and customary meaning."). "In determining the meaning of the disputed claim limitation, we look principally to the intrinsic evidence of record, examining the claim language itself, the written description, and the prosecution history, if in evidence." *DePuy Spine, Inc. v. Medtronic Sofamor Danek, Inc.*, 469 F.3d 1005, 1014 (Fed. Cir. 2006) (citing *Phillips*, 415 F.3d at 1312–17). Extrinsic evidence is "less significant than the intrinsic record in determining 'the legally operative meaning of claim language.'" *Phillips*, 415 F.3d at 1317 (quoting *C.R. Bard, Inc. v. U.S. Surgical Corp.*, 388 F.3d 858, 862 (Fed. Cir. 2004)).

Only those claim terms that are in controversy need to be construed, and only to the extent necessary to resolve the controversy. *See Nidec Motor Corp. v. Zhongshan Broad Ocean Motor Co.*, 868 F.3d 1013, 1017 (Fed. Cir. 2017) (stating that "we need only construe terms 'that are in controversy, and only to the extent necessary to resolve the controversy'" (quoting *Vivid Techs., Inc. v. Am. Sci. & Eng'g, Inc.*, 200 F.3d 795, 803 (Fed. Cir. 1999))).

Petitioner argues that the claims "should receive their plain and ordinary meaning, in the context of the '565 patent specification, under the *Phillips* standard." Pet. 17. Patent Owner agrees. Prelim. Resp. 13. For purposes of resolving the parties' patentability disputes, we need not construe expressly any claim language.

C. Discretion under 35 U.S.C. § 314

Under § 314(a), we have discretion to deny institution of an *inter partes* review. *Cuozzo Speed Techs., LLC v. Lee*, 136 S. Ct. 2131, 2140 (2016); *SAS Inst. Inc. v. Iancu*, 138 S. Ct. 1348, 1356 (2018); *Harmonic Inc.*

v. Avid Tech., Inc., 815 F.3d 1356, 1367 (Fed. Cir. 2016) ("[T]he PTO is permitted, but never compelled, to institute an IPR proceeding."); *see also* 37 C.F.R. § 42.4(a) ("The Board institutes the trial on behalf of the Director.").

Here, Petitioner has filed on the same day two petitions challenging claims 1–7 of the '565 patent. In IPR2020-00445, Petitioner presents four obviousness challenges, the first based on Robichaux[3] and Scherer, each of the others based on Robichaux and Scherer combined with one or both of Takahashi and Suzuki. IPR2020-00445, Paper 3 at 5. In this proceeding, Petitioner presents two obviousness grounds, one based on Suzuki, Cullen, and Scherer, the other based on Suzuki, Cullen, Scherer, and Takahashi. Pet. 5.

Petitioner filed a Notice of Ranking. Paper 3 ("Notice"). The Notice ranks the Petition in this proceeding above the petition in IPR2020-00445. Notice 1. Patent Owner did not file a response to the Notice.[4] We do not exercise our discretion under § 314(a) to deny this Petition. Furthermore, the discretion under § 314(a) is not executed in IPR2020-00445 for the reasons stated in the Decision on Institution in that proceeding.

[3] "Robichaux" refers to Jerry Dean Robichaux et al., European Patent Application No. EP 1 076 165 A2 (IPR2020-00445, Ex. 1020, "Robichaux"), published Feb. 14, 2001.

[4] Patent Owner also does not dispute Petitioner's arguments in IPR2020-00445 that its simultaneous filing of two petitions does not prejudice Patent Owner. *See generally* IPR2020-00445, Papers 2, 7, 10.

D. Discretion under 35 U.S.C. § 325(d)

In *Advanced Bionics, LLC v. Med-El Elektromedizinische Geräte GMBH*, IPR2019-01469, Paper 6 (PTAB Feb. 13, 2020) (precedential) ("*Advanced Bionics*"), the Board applied a two-part framework in considering whether to exercise discretion to deny institution under § 325(d): "(1) whether the same or substantially the same art previously was presented to the Office or whether the same or substantially the same arguments previously were presented to the Office; and (2) if either condition of [the] first part of the framework is satisfied, whether the petitioner has demonstrated that the Office erred in a manner material to the patentability of challenged claims." *Advanced Bionics* at 8.

Within this two-part framework, the Board considers a number of non-exclusive factors in evaluating whether to exercise its discretion under § 325(d). *See Becton, Dickinson & Co. v. B. Braun Melsungen AG*, IPR2017-01586, Paper 8 (PTAB Dec. 15, 2017) (precedential as to § III.C.5, first para.) ("*Becton, Dickinson*"); *see also Advanced Bionics* at 9–11. The factors set forth in *Becton, Dickinson* are as follows:

> (a) the similarities and material differences between the asserted art and the prior art involved during examination; (b) the cumulative nature of the asserted art and the prior art evaluated during examination; (c) the extent to which the asserted art was evaluated during examination, including whether the prior art was the basis for rejection; (d) the extent of the overlap between the arguments made during examination and the manner in which petitioner relies on the prior art; (e) whether petitioner has pointed out sufficiently how the examiner erred in its evaluation of the asserted prior art; and (f) the extent to which additional evidence and facts presented in the petition warrant reconsideration of the prior art or arguments.

Becton, Dickinson at 17–18.

Factors (a), (b), and (d) of the *Becton, Dickinson* factors relate to whether the art or arguments presented in the Petition are the same or substantially the same as those previously presented to the Office. *Advanced Bionics* at 10. Factors (c), (e), and (f) "relate to whether the petitioner has demonstrated a material error by the Office" in its prior consideration of that art or arguments. *Id.* Only if the same or substantially the same art or arguments were previously presented to the Office do we then consider whether petitioner has demonstrated a material error by the Office. *Id.* "At bottom, this framework reflects a commitment to defer to previous Office evaluations of the evidence of record unless material error is shown." *Id.* at 9.

The Petition argues that we should not deny institution under § 325(d). Pet. 24–28. The Petition notes that Scherer was cited in an information disclosure statement during prosecution of U.S. Patent Application No. 14/928,980 ("the '980 application"), which issued as the '565 patent. *Id.* at 25–26. The Petition argues, however, that it presents Scherer in combination with Suzuki and Cullen, which the Office did not consider during prosecution of the '980 application. *Id.* at 27–28. Petitioner asserts that the Petition demonstrates that

> Suzuki's torque controller generates a demand torque, estimates a torque output, compares the demand torque to the estimated torque to determine the difference, and controls torque output through fuel quantity and spark timing adjustments based on the calculated difference. . . . Cullen's engine controller estimates torque output based on current spark angle, current air/fuel ratio, and estimated air charge. . . . Scherer's transient torque control system uses a high-pass filter for its typical purpose, here, to remove the low frequency component of a torque signal and output the filtered signal to a torque controller. . . . And as

> discussed below, a POSA would have been motivated to combine Cullen's and Scherer's teachings with Suzuki's torque controller, providing the predictable result of precisely controlling engine torque output. . . . Accordingly, combining Suzuki, Cullen, and Scherer does not present the same or substantially similar prior art or arguments before the Office, so the Board should **not** deny institution under § 325(d).

Id. at 27–28.

Patent Owner argues that "Petitioner attempts to modify *Scherer*, which is already of record, with selective teachings of two or more secondary references, which are cumulative of the admitted prior art of the '565 patent." Prelim. Resp. 4–5. Patent Owner adds that

> The '565 patent discloses what was well known in the prior art, namely, that, "[i]n engine torque controllers for DISI engines, when the engine is operated in stratified mode, spark angle has little influence on the torque produced. . . . The torque producer modifies the air/fuel in order to control the torque produced. . . . Conversely, when the engine is operating in homogenous mode . . . [t]he torque producer modifies the timing of the spark ignition in order to control the torque produced." (Ex. 1001 at 1:36-45; (*Id*. at 23.)[).] This disclosure constitutes the "admitted prior art" of the '565 patent.

Id. at 10–11.

In response, Petitioner argues, among other things, that Suzuki is not cumulative of the admitted prior art. Petitioner explains that

> In addition to admitted prior art features, Suzuki discloses (1) a torque controller, Pet., 41–43; (2) a torque producer, *id.*, 43–44; (3) a torque estimator, *id.*, 44–45; (4) a comparator, *id.*, 48–50; (5) a high-pass filter, *id.*, 50–57; and (6) a transient torque controller, *id.*, 57–61. The Office never considered that a single prior art reference included these additional features. Failing to consider Suzuki was material error as the '565 patent claims are obvious in view of Suzuki, Cullen, and Scherer.

Pet. Reply 7–8.

Patent Owner does not respond to Petitioner's assertion that Suzuki teaches a number of things beyond the admitted prior art. *See generally* Sur-reply.

We begin our analysis by considering whether "the same or substantially the same prior art or arguments" were presented previously to the Office. To do so, we look to *Becton, Dickinson* factors (a), (b), and (d). *Advanced Bionics* at 10.

Considering *Becton, Dickinson* factors (a) and (b), we find the art primarily asserted by Petitioner materially differs from and is not cumulative to the art involved during examination of the '980 patent. During examination of the '980 application, Scherer was cited by the Applicant on an Information Disclosure Statement, and the Examiner indicated on the Information Disclosure Statement that Scherer was considered. *See* Ex. 1002, 42–44. Aside from this, the present record reflects that the art asserted by Petitioner bears little or no similarity to and is not cumulative of the art involved during examination. At this stage, Patent Owner does not dispute Petitioner's assertion that Suzuki teaches "(1) a torque controller, Pet., 41–43; (2) a torque producer, *id.*, 43–44; (3) a torque estimator, *id.*, 44–45; (4) a comparator, *id.*, 48–50; (5) a high-pass filter, *id.*, 50–57; and (6) a transient torque controller, *id.*, 57–61." Pet. Reply 7–8; *see generally* Sur-reply. Additionally, Patent Owner does not argue, and it is not readily apparent, that any of these asserted disclosures of Suzuki are also taught by the admitted prior art. *See* Prelim. Resp. 10–11 (citing '565 patent column 1, lines 36–45 as "constitut[ing] the 'admitted prior art' of the '565 patent"); *see generally* Sur-reply. The admitted prior art discusses adjusting spark timing and fuel timing during stratified combustion and homogeneous

combustion operation (Ex. 1001, 1:36–45), but it is not clear that it discusses any of the things listed by Petitioner as disclosed in Suzuki. For example, Patent Owner does not provide any persuasive evidence or explanation that the admitted prior art teaches an "estimator" or "comparator." *See generally* Prelim. Resp.; Sur-reply. Nor does Patent Owner assert that Scherer teaches the claimed "estimator" or "comparator." *See generally* Prelim. Resp.; Sur-reply.

Regarding *Becton, Dickinson* factor (d), there appears to be no overlap between the arguments presented by Petitioner and arguments made during examination. The '980 application received a first-action allowance with no explanation of any reasons for allowance. Ex. 1002, 49–50.

For the above reasons, we determine that the same or substantially the same art or arguments were not previously presented to the Office, and we need not consider the second part of the *Advanced Bionics* framework. Accordingly, we decline to exercise our discretion under 35 U.S.C. § 325(d) to deny the Petition.

E. Alleged Obviousness of Claims 1, 4, and 7 over Suzuki, Cullen, and Scherer

1. Overview of Suzuki

Suzuki "is directed to a control apparatus, or controller, for a direct-injection spark-ignition type engine." Ex. 1005, 2:52–53. Suzuki shows an exemplary engine in Figure 2, which is reproduced below.

FIG.2

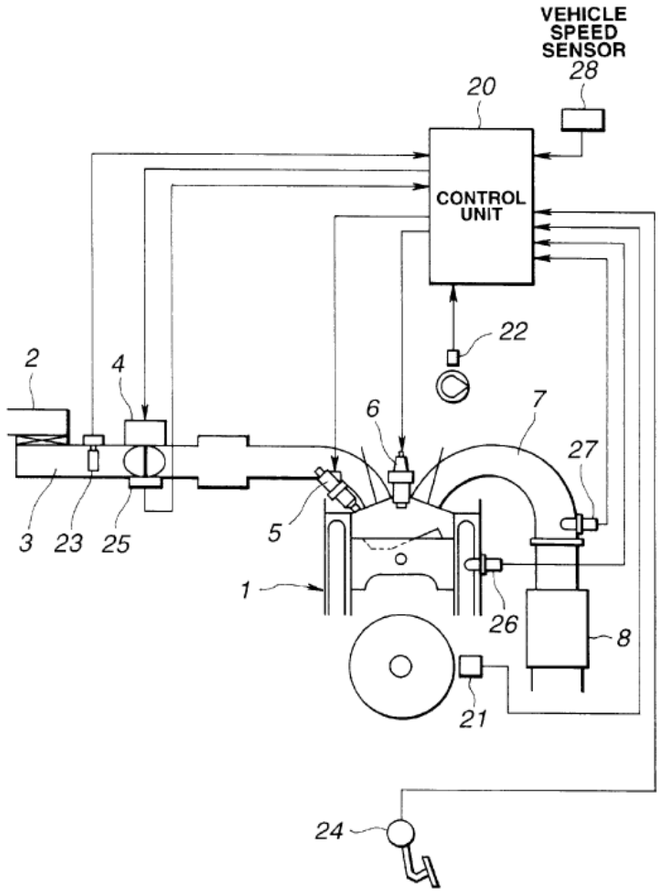

Figure 2 shows engine 1, which includes intake passage 3, throttle valve 4, fuel injector 5, spark plug 6, exhaust passage 7, controller 20, accelerator sensor 24, and various other components. *Id.* at 3:24–43, 3:61–4:5, 4:18–21.

Engine 1 is "a direct-injection spark-ignition engine." *Id.* at 3:23–24. Controller 20 controls throttle valve 4, which controls air intake through intake passage 3 into the combustion chamber. *Id.* at 3:24–31. In response to a signal from controller 20, fuel injector 5 injects fuel directly into the combustion chamber. *Id.* at 3:33–34. The fuel mixes with air in the combustion chamber, and spark plug 6 generates a spark to combust the

mixture of fuel and air. *Id.* at 3:38–45. Exhaust gases leave the combustion chamber through exhaust passage 7. *Id.* at 3:62–63.

Fuel injector 5 can introduce fuel into the combustion chamber during the intake stroke or the compression stroke. *Id.* at 3:39–44. If fuel injector 5 injects fuel during the intake stroke, the fuel forms a homogeneous mixture with the air in the combustion chamber. *Id.* at 3:39–42. If fuel injector 5 injects fuel during the compression stroke, the fuel forms a stratified mixture with the air around spark plug 6. *Id.* at 3:42–44. "The combustion modes include homogenous stoichiometric combustion . . . , homogeneous lean combustion . . . , and stratified lean combustion." *Id.* at 3:46–50. Suzuki discusses provisions for switching between homogeneous and stratified combustion modes in connection with Figures 1(A) and 1(B), which are reproduced below.

FIG.1(A)

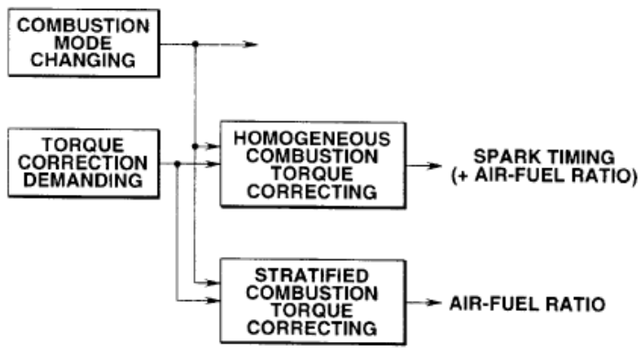

FIG.1(B)

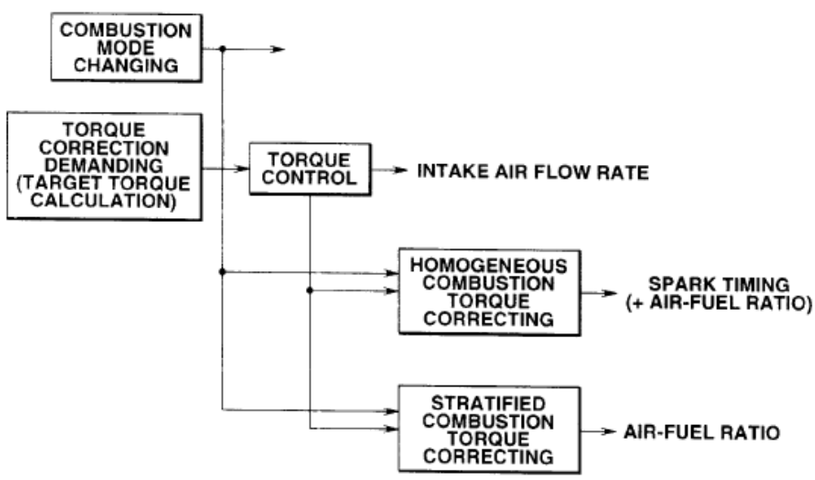

Figures 1(A) and 1(B) are "block diagrams showing the overall arrangement of the invention." *Id.* at 1:66–67.

In Figure 1(A), there is shown a combustion mode changing section, a torque correction demanding section, a homogeneous combustion torque correcting section, and a stratified combustion torque correcting section. *Id.* at 2:54–3:4. Combustion mode changing section serves to make "a combustion change between homogeneous combustion (wherein fuel is

injected during an intake stroke to diffuse the fuel so as to form a homogeneous mixture in the combustion chamber) and stratified combustion (wherein fuel is injected during a compression stroke to form a stratified mixture around the spark plug)." *Id.* at 2:55–61. The torque correction demanding section generates a torque correction demand according to engine operating conditions. *Id.* at 2:61–63. During homogeneous combustion, the homogeneous torque correcting section responds to the torque correction demand by "correcting at least the spark timing in order to make a torque correction during homogeneous combustion." *Id.* at 2:64–3:1. During stratified combustion, the stratified torque correcting section responds to the torque correction demand "and corrects at least the air-fuel ratio in order to make a torque correction." *Id.* at 3:1–3.

Another overall arrangement appears in Figure 1(B). *Id.* at 3:5. In addition to the sections of the arrangement of Figure 1(A), the arrangement of Figure 1(B) includes a torque control section, which responds "to the torque correction demand and controls the amount of air permitted to enter the engine in order to control the torque." *Id.* at 3:12–15. Suzuki explains that

> [b]ecause air intake cannot be changed rapidly, a homogenous combustion torque correcting section corrects at least the spark timing in order to make a torque correction with a fast response (compared with the delay associated with intake air flow rate control) during homogenous combustion. A stratified combustion torque correcting section corrects at least the air-fuel ratio to make torque correction during stratified combustion.

Id. at 3:15–22.

Suzuki discusses details of one method of correcting torque in connection with Figure 6, which is reproduced below.

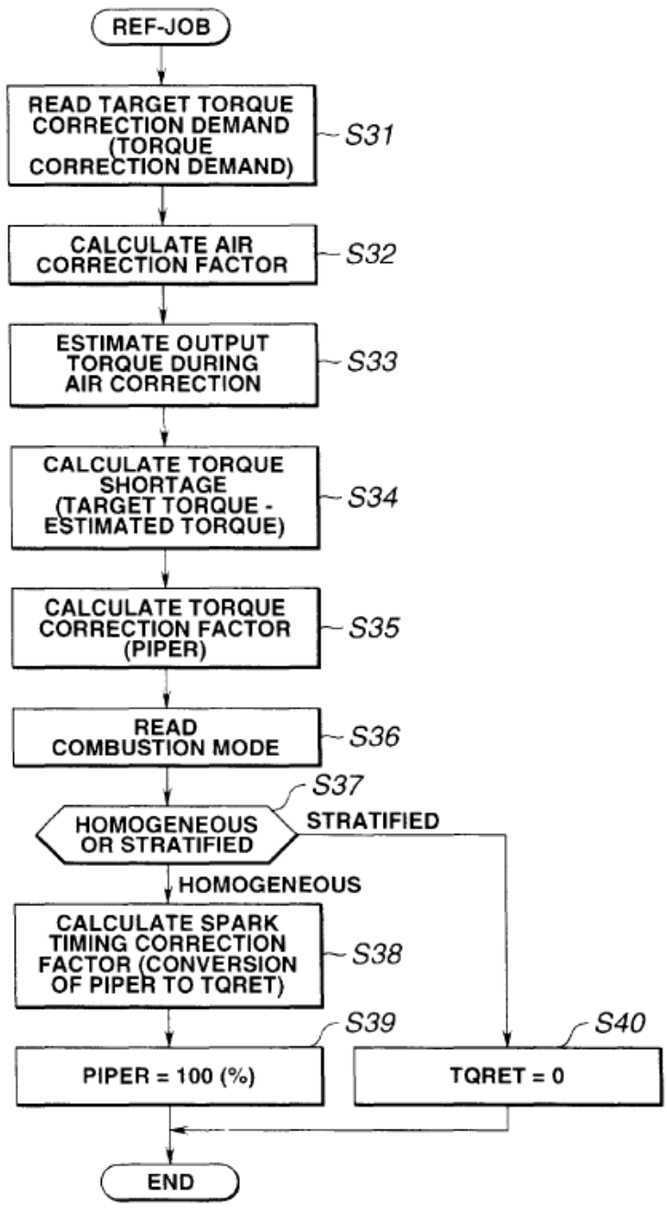

Figure 6 is a flow diagram illustrating "a torque correcting routine." *Id.* at 2:10–11, 7:11–12.

In step S31, "a target torque tTRQ calculated by torque demand control is retrieved. The parameter tTRQ includes a torque correction demand (demand for increasing or decreasing the torque) resulting from gear shifting of the transmission, turning on the air conditioner, recovery from a fuel cut, or the like." *Id.* at 7:14–19. Following this,

> [i]n step S32, an air correction factor to obtain the target torque (the torque correction demand) is calculated to control the degree of opening of the electronic controlled throttle valve 4.
>
> In step S33, the output torque during intake air correction is estimated.
>
> In step S34, the estimated torque is subtracted from the target torque (which is based on the torque demand control target torque or the torque correction demand calculated at step S31) to calculate the torque shortage due to the delay involved with changing the amount of intake air.

Id. at 7:29–39.

At step S36, the combustion mode is read and it is ascertained whether it is the homogeneous or stratified combustion mode. *Id.* at 7:45–50.

Depending on which combustion mode is active, in step S38 or step S40, different control parameters are set. *Id.* at 7:51–64. Subsequently, control proceeds according to a spark timing calculation routine and a fuel delivery requirement calculation routine. *Id.* at 7:65–67.

For the embodiment discussed in connection with Figure 6, Suzuki shows response waveforms in Figure 13, which is reproduced below.

FIG.13

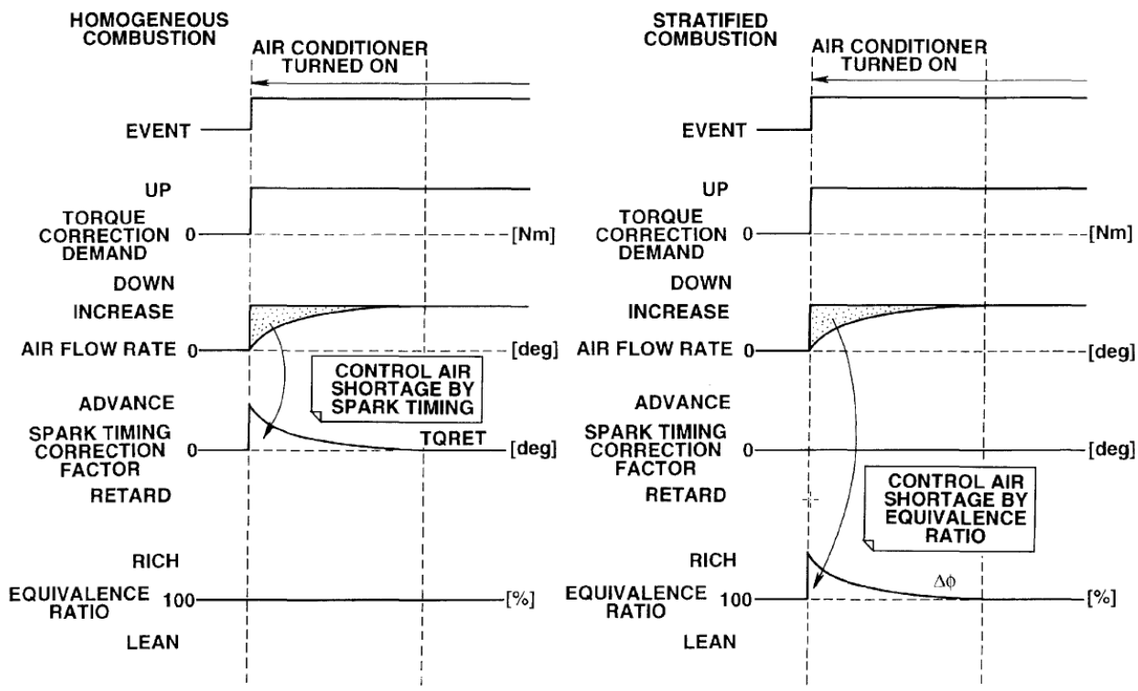

Figure 13 shows, for both homogeneous combustion and stratified combustion, variation in certain values, such as torque correction demand, air flow rate, spark timing correction factor, and equivalence ratio in response to activation of an air conditioner. *See id.*, Fig. 13. Suzuki explains that

> FIG. 13 shows response waveforms for the second embodiment. Assuming that a torque correction (torque up) demand is produced when the air conditioner is turned on, the amount of air to the engine increases; however, a torque shortage occurs because of the delay in increasing the actual amount of air to the engine. The spark timing is corrected to correct the torque shortage during homogeneous combustion and the equivalence ratio (air-fuel ratio) is corrected, without correcting the spark

> timing, to correct the torque shortage during stratified combustion.

Id. at 8:51–60.

2. Overview of Cullen

Cullen discusses "inferring the torque produced by an engine." Ex. 1006, 1:7–8. Cullen teaches states that it was not practical to measure engine torque directly. *Id.* at 1:16–17. Cullen desires "an improved torque prediction algorithm." *Id.* at 2:26–29. Cullen discusses an example of inferring engine torque in connection with Figures 3 and 3A, which are reproduced below.

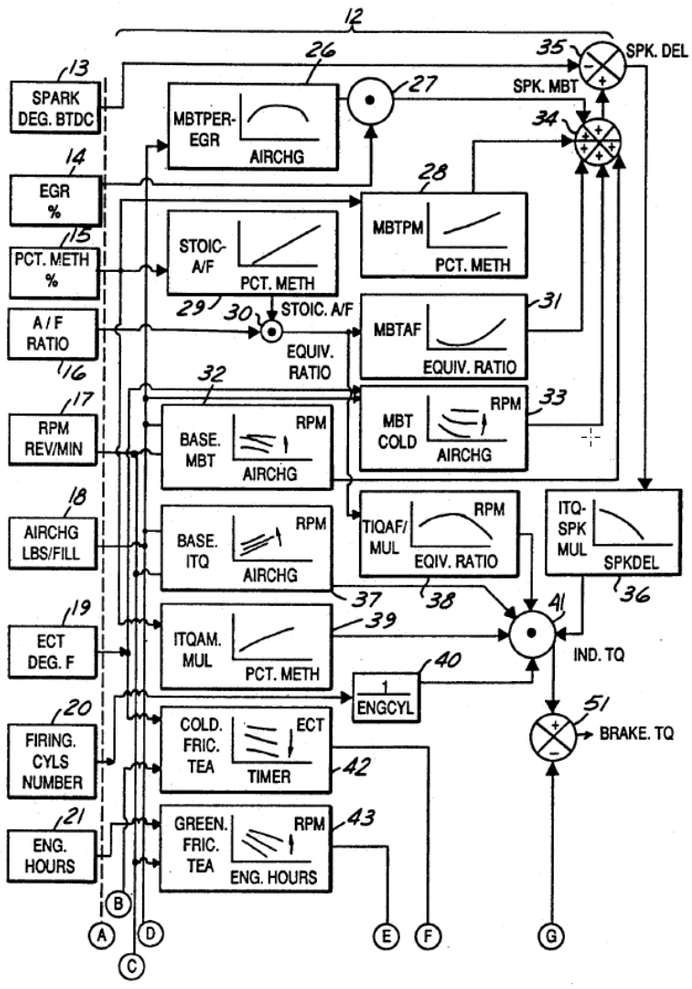
12
13
SPARK DEG. BTDC
14
EGR %
15
PCT. METH %
A / F RATIO
16
17
RPM REV/MIN
18
AIRCHG LBS/FILL
19
ECT DEG. F
20
FIRING. CYLS NUMBER
21
ENG. HOURS
26
MBTPER-EGR
AIRCHG
27
35
SPK. DEL
SPK. MBT
34
28
MBTPM
PCT. METH
STOIC-A/F
PCT. METH
29
30
STOIC. A/F
EQUIV. RATIO
MBTAF
EQUIV. RATIO
31
32
BASE. MBT
RPM
AIRCHG
MBT COLD
RPM
AIRCHG
33
BASE. ITQ
RPM
AIRCHG
TIQAF/ MUL
RPM
EQIV. RATIO
ITQ-SPK MUL
SPKDEL
36
37
38
41
ITQAM. MUL
PCT. METH
39
40
1
ENGCYL
IND. TQ
51
BRAKE. TQ
COLD. FRIC. TEA
ECT
TIMER
42
GREEN. FRIC. TEA
RPM
ENG. HOURS
43
A
B
C
D
E
F
G

FIG.3

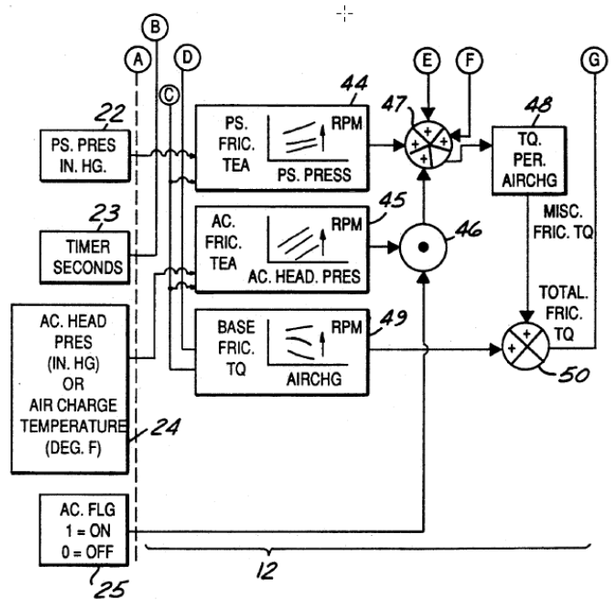

FIG.3A

Figures 3 and 3A provide "a logic flow diagram of the operation of an electronic engine control module." *Id.* at 2:52–54.

Figures 3 and 3A show electronic engine control module 12. *Id.* at 6:3–4. Electronic control module 12 has algorithms for processing spark timing input 13, exhaust gas recirculation rate input 14, percent methanol fuel input 15, air/fuel ratio input 16, engine rpm input 17, engine air charge input 18, engine coolant temperature 19, firing cylinder indication input 20, engine operating hours 21, power steering pressure 22, timer input 23, input 24 indicating air conditioning head pressure or temperature, and flag input 25 indicating air conditioning on or off. *Id.* at 5:61–6:2. Based on inputs from various blocks, block 41 provides indicated torque. *Id.* at 6:67–7:1. Based on inputs from various blocks, summer 50 (Figure 3A) provides total friction torque. *Id.* at 7:28–29. Summer 51 (Figure 3) receives positive

input from block 41 and negative input from summer 50 "to provide total friction torque." *Id.* at 7:31–33.

3. Overview of Scherer

Scherer discloses an apparatus and method for controlling an internal combustion engine's torque. Ex. 1007, 1:7–11. Scherer discusses one embodiment in connection with Figure 1, which is reproduced below.

Fig. 1

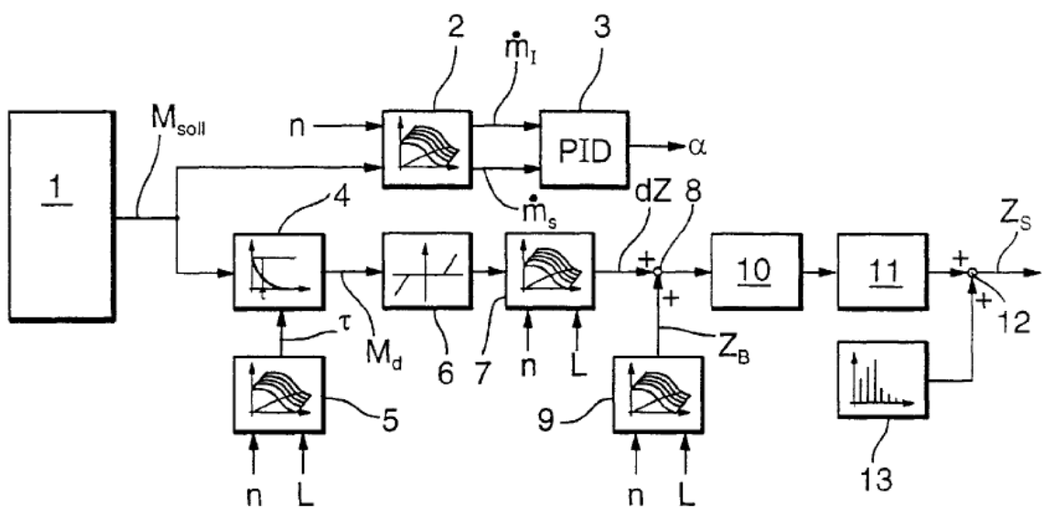

Figure 1 is a block diagram of a device for adjusting engine torque of an Otto engine. *Id.* at 3:30–31.

The device of Figure 1 includes engine torque coordination unit 1, an "airflow regulating branch," and a parallel "ignition point adjusting branch." *Id.* at 3:60–63, 4:20–23. Engine torque coordination unit 1 "provides a signal indicative, for example, of the desired engine torque (M_{des}) requested by the driver via the accelerator pedal."[5] *Id.* at 3:61–63. The airflow

[5] The signal referred to as M_{des} in the text appears to be labeled M_{soll} in Figure 1.

regulating branch includes input-side air flow rate calculating unit 2 and adjoining PID air flow rate regulator 3. *Id.* at 3:67–4:2. The ignition point adjusting branch includes high pass filter 4 with characteristic time constant diagram unit 5. *Id.* at 4:20–35. The ignition point adjusting branch also includes input-side dead zone unit 6, unit 7, adder 8, ignition point calculating unit 9, unit 10, unit 11, adder 12, and conventional knock regulating stage 13. *Id.* at 4:53–5:5.

Air flow rate calculating unit 2 of the airflow regulating branch receives demanded desired engine torque M_{des} and the momentary rotational engine speed (n). *Id.* at 4:2–5. Based on these inputs and a stored characteristics diagram, air flow rate calculating unit 2 calculates a desired air flow rate value (m_s). *Id.* at 4:2–7. The actual air flow rate value (m_I) is also detected by air flow rate calculating unit 2 via an associated sensor system. *Id.* at 4:8–10.

PID air flow regulator 3 receives both the desired air flow rate value m_s and the actual air flow rate value m_I. *Id.* at 4:8–12. Based on these values, PID air flow regulator 3 identifies "a suitable control signal (α) for an air-flow regulating throttle valve." *Id.* at 4:8–13. Scherer explains that

> As is well known, because of the finite throttle valve adjusting speed and mainly because of the suction pipe filling characteristics, engine torque cannot be adjusted in this manner to follow a highly dynamic desired engine torque change without a noticeable sluggishness. That is, it can adjust only a quasi-static desired engine torque part.

Id. at 4:13–19.

Given this, Scherer relies on the ignition point adjusting branch "to adjust the dynamic desired torque component which exceeds this quasi-static part." *Id.* at 4:20–22. Scherer uses the ignition point adjusting branch

> only to adjust specifically that dynamic desired torque component which cannot be regulated by the air-flow-regulating branch. The high pass filter stage, which precisely determines this dynamic desired torque component (M_d), consists of a high pass filter 4 with an adjustable decay time constant (τ), and a characteristic time constant diagram unit 5.

Id. at 4:28–35.

High pass filter 4 transmits the dynamic desired torque component M_d to input-side dead zone unit 6, and the ignition point adjusting branch uses the dynamic desired torque component M_d and various other factors to generate an adjusting signal (Z_S) for the ignition point adjustment, which is output from adder 12. *Id.* at 4:53–5:6. Scherer explains that "[t]he ignition point adjusting branch is able to react very rapidly to sudden changes of the engine torque." *Id.* at 4:23–25.

Scherer discusses other variations of its system in connection with Figures 2–4. For example, in connection with Figure 2, Scherer discusses a system similar to that of Figure 1 but adapted for a diesel engine. *Id.* at 5:16–18. In this embodiment, "instead of an air flow regulating device, a device for adjusting the fuel injection duration is provided." *Id.* at 5:23–24. Additionally, "[i]nstead of the ignition point adjusting branch of the device of Fig. 1, the device of Fig. 2 contains an injection start adjusting branch." *Id.* at 5:35–37.

4. Discussion

Petitioner asserts that Suzuki, Cullen, and Scherer, in combination, teach all of the limitations of claims 1, 4, and 7. Pet. 39–69. Petitioner cites Suzuki as teaching most of the limitations of claims 1, 4, and 7. *Id.* For example, Petitioner asserts that Suzuki teaches "a device for controlling a

torque output of an engine"[6] having a "torque demand controller for generating a torque demand signal," as recited in claim 1. *Id.* at 39–43. Additionally, Petitioner asserts that Suzuki teaches "a torque producer which receives the torque demand signal," as recited in claim 1. *Id.* at 43–44. Petitioner also asserts that the torque producer taught by Suzuki includes "a comparator," as recited in claim 1. *Id.* at 48–50.

Petitioner asserts that Suzuki and Cullen render obvious claim 1's "estimator which receives as inputs a current spark angle signal, a current air/fuel ratio signal and an estimated torque signal." *Id.* at 44–48. Petitioner explains that Suzuki teaches estimating an output torque in connection with step S33 of Figure 6. *Id.* at 44. Petitioner argues "[t]hus, Suzuki's torque correction section includes an 'estimator,' as recited in claim 1, that estimates a torque output." *Id.* at 45. Conceding that Suzuki does not disclose expressly that its estimator receives "a current spark angle signal, a current air/fuel ratio signal, and an estimated air charge signal" as inputs, Petitioner asserts that "Cullen explicitly disclosed this feature" in connection with its calculation of a predicted torque ("IND_TQ"). *Id.* at 45–47.

Petitioner asserts that it would have been obvious to program Suzuki's controllers to use the inputs disclosed by Cullen for estimating torque. *Id.* at 47. Petitioner argues that this would ensure that "Suzuki's controller estimates torque output more accurately." *Id.* Petitioner contends that a person of ordinary skill in the art "would have been motivated to modify Suzuki's control unit 20 so that the estimator receives a current spark angle

[6] At this stage of the proceeding, we need not address whether the preamble of claim 1 is limiting, as Petitioner shows sufficiently for purposes of institution that the recitation in the preamble is satisfied by the prior art.

signal, a current air/fuel ratio signal, and an estimated air charge signal as inputs." *Id.* at 48. Petitioner argues that a person of ordinary skill in the art could have easily implemented the teachings of Cullen in Suzuki's system simply by programming Suzuki's control unit 20. *Id.*

Additionally, Petitioner asserts that Suzuki and Scherer render obvious claim 1's "high pass filter which receives as an input the difference signal in which low frequency components are absent." *Id.* at 33–39, 50–57. Conceding no express teaching in Suzuki of a high pass filter, Petitioner argues that "Suzuki's spark and fuel correction factor curves in Figure 12-15 suggest that a high-pass filter is, in fact, being used." [Ex. 1003 ¶ 94.] To a [person of ordinary skill in the art], the shape of these curves suggests that the torque correction demand signal is filtered with a high-pass filter." Pet. 33. Petitioner further argues that "Scherer expressly discloses using a high-pass filter to remove a low frequency component from a torque signal, thereby isolating the torque signal's high frequency, dynamic component." *Id.* at 34.

Petitioner argues that it would have been obvious to a person of ordinary skill in the art to add Scherer's high pass filter 4 to Suzuki's system. *Id.* at 36–39, 53–57. Petitioner contends that "combining Suzuki's and Scherer's teachings would have yielded predictable benefits and result—for example, adjusting the torque output with a quicker response time during transient engine operations." *Id.* at 36–37. Petitioner asserts that "a [person of ordinary skill in the art] would have further understood that combining Scherer's high-pass filter 4 with Suzuki's control unit 20 would have expedited the response time for correcting the transient component of the demand torque." *Id.* at 38. Petitioner argues that

> a [person of ordinary skill in the art] would have understood that Scherer teaches that the high-pass filter should output the filtered signal to the transient torque controller (i.e., the ignition point adjustment branch or injection start adjusting branch. EX1003, ¶99; EX1007, 4:53-56 ("The device for the ignition point adjustment receives the dynamic desired torque component (M_d) from the high-pass filter 4."); *see also* EX1007, 5:58-64 ("The comparatively rapidly reacting injection start adjusting branch regulates precisely that dynamic desired engine torque part (Md) …for adjusting the injection duration in the case of sudden changes of the desired engine torque."). Accordingly, a [person of ordinary skill in the art] would have recognized that in combining Scherer's and Suzuki's teachings, the high-pass filter would output the filtered signal to Suzuki's transient torque control sections (i.e., the homogeneous and stratified torque correction sections). EX1003, ¶99.

Id. at 37–38. Petitioner adds that

> Given that the homogeneous and stratified torque correction sections in Suzuki's control unit 20 are intended to respond to dynamic changes in torque demand, a [person of ordinary skill in the art] would have been motivated to use Scherer's high-pass filter 4 to receive Suzuki's torque difference signal and output the dynamic component of the torque difference signal to Suzuki's homogeneous and stratified torque correction sections. EX1005, 1:44-63, 3:10-22; EX1003, ¶100.

Id. at 38.

This allegedly obvious combination of the references' teachings would also have claim 1's "transient torque controller," Petitioner contends. *Id.* at 57–61. Petitioner explains Suzuki "discloses that the homogeneous combustion torque correcting section converts the torque correction factor processed from the torque shortage signal into a spark timing adjustment when the engine is set in a homogeneous mode (S38)." *Id.* at 58.

Regarding claims 4 and 7, Petitioner relies on substantially the same reasoning that it allegedly would have been obvious to combine the

teachings of Suzuki, Cullen, and Scherer. *Id.* at 30–36, 61–69. Petitioner asserts that combining Cullen's disclosure regarding estimating torque and Scherer's high pass filter 4 with Suzuki's system would have resulted in a method meeting all of the limitations of claims 4 and 7. *Id.* at 61–69.

Patent Owner disputes Petitioner's argument that Suzuki suggests high pass filtering. Prelim. Resp. 15–18. In particular, Patent Owner argues that Suzuki does not disclose that the signals shown in Figures 12–15 use a high pass filter. *Id.*

Patent Owner also argues that "[a person of ordinary skill in the art] would not consider combining *Scherer* with *Suzuki* or any other prior art reference because they teach away from each other and the '565 patent." Prelim. Resp. 20. Patent Owner argues that the references teach away because "*Scherer* does not consider a stratified charge operation mode for a DISI engine as the '565 patent teaches and claims and *Scherer* teaches diesel engine control, which the '565 does not teach or even reference." *Id.* at 22. Patent Owner also argues that *Scherer* differs from the disclosure of the '565 patent in other ways. *Id.* at 22–24. Patent Owner emphasizes that Scherer does not teach high pass filtering an output of a comparator, as required by the challenged claims of the '565 patent. *Id.* at 23. Patent Owner concludes that "[c]ombining the teachings of *Scherer* and those of any one or more of the secondary references relied upon by Petitioner, even in hindsight, would result in a desired engine torque signal which is high-pass filtered, and a 'difference signal' which is not high-pass filtered." *Id.* at 24.

Petitioner argues that Patent Owner's observation that Scherer does not teach a high pass filter applied to a difference improperly attacks the teachings of the references individually. Pet. Reply 2–4. In combination,

not individually, Suzuki and Scherer render obvious applying a high pass filter to a difference signal, Petitioner emphasizes. *Id.*

Petitioner also argues that the references do not teach away. *Id.* at 4–6. Petitioner argues that for a reference to teach away, it must "criticize, discredit, or otherwise discourage the solution claimed." *Id.* at 4 (quoting *In re Fulton*, 391 F.3d 1195, 1201 (Fed. Cir. 2004)). Under this test, Petitioner asserts that Patent Owner does not identify any way in which the cited references teach away from the claimed invention of the '565 patent. *Id.* at 5–6.

In response, Patent Owner reiterates that neither Suzuki nor Scherer teaches high pass filtering a difference signal. Sur-reply 3–5. Patent Owner argues that if a person of ordinary skill in the art had considered combining the references' teachings, "the [person of ordinary skill in the art] would have been taught to 'high-pass filter' an input to a comparator that outputs a 'difference signal,' rather than filtering the 'difference signal.'" *Id.* at 4.

Weighing the parties' arguments and evidence, at this stage, we determine Petitioner has demonstrated a reasonable likelihood of prevailing on its assertion that claims 1 4, and 7 would have been obvious in view of Suzuki, Cullen, and Scherer. Petitioner identifies reasons associated with the references' teachings that a person of ordinary skill in the art would have for implementing Suzuki's torque estimator with the details disclosed by Cullen. Pet. 29–33, 44–48. At this stage, Patent Owner does not dispute Petitioner's assertions that it would have been obvious to combine Cullen's estimating strategy with Suzuki's disclosure. *See generally* Prelim. Resp. Our review of Petitioner's arguments and evidence persuades us that

Petitioner has shown adequately that it would have been obvious to combine the teachings of Cullen and Suzuki.

Regarding Petitioner's assertion that it would have been obvious to combine Scherer's high pass 4 filter with Suzuki's system, Petitioner explains why a person of ordinary skill in the art allegedly would have been motivated to combine the references' teachings. Specifically, Petitioner asserts that it would have been predictable that adding Scherer's high pass filter 4 to Suzuki would allow "adjusting the torque output with a quicker response time during transient engine operations." Pet. 36–37. At this stage, Patent Owner does not dispute this assertion. *See generally* Prelim. Resp.; Sur-reply.

Instead, Patent Owner argues that neither Scherer nor Suzuki specifically teaches applying a high pass filter to a difference signal. Prelim. Resp. 21–23. Patent Owner emphasizes that Scherer teaches its high pass filter 4 receives and filters a desired engine torque signal. *Id.* This results from Scherer's high pass filter 4 sitting immediately downstream of Scherer's engine torque coordination unit 1, which provides desired engine torque signal M_{des}. *See* Ex. 1007, 3:60–67; 4:40–45. In view of these teachings, Patent Owner suggests that the only possible obvious location and use of a high pass filter is downstream of an engine torque coordination unit to filter a desired torque signal. *See* Prelim. Resp. 24; Sur-reply 4.

This argument takes a myopic view of Scherer, overlooking a significant aspect identified by Petitioner, and attacking the references individually. Patent Owner's argument overlooks that Scherer's high pass filter 4 sits immediately upstream of the provisions for adjusting torque, such as the provisions for controlling spark to adjust torque, in the case of

Figure 1. *See* Ex. 1007, 4:53–5:9 ("The device for the ignition point adjustment receives the dynamic desired torque component (M_d) from the high pass filter 4, by way of an input-side dead zone unit 6 which suppresses very small ignition point changes."). Recognizing this aspect of Scherer's disclosure, Petitioner argues it would have been obvious to add high pass filter 4 to Suzuki immediately upstream of the provisions for adjusting torque, which would place high pass filter 4 downstream of Suzuki's comparator. *See* Pet. 37–38. Situated immediately upstream of the torque-adjusting provisions and immediately downstream of the comparator in Suzuki's system, high pass filter 4 would filter the difference signal generated by Suzuki's comparator. Thus, Petitioner provides a reasoned explanation of an allegedly obvious combination of the references that would high pass filter a torque difference signal, regardless of whether any of the references individually teaches high pass filtering a torque difference signal.[7]

Patent Owner's emphasis that Scherer teaches sending a desired engine torque signal to high pass filter 4 may support a conclusion that another obvious combination of the references' teachings would involve high pass filtering a desired engine torque signal. But, at this stage, it does not persuade us that the only possible obvious combination of the

[7] Because we are persuaded Petitioner has shown adequately for the purposes of institution that it would have been obvious to combine Scherer and Suzuki in a manner that would have a high pass filter applied to a torque difference signal, we need not resolve the issue of whether Suzuki itself suggests a high pass filter. Resolution of that highly factual issue may be more appropriately undertaken, if necessary, following the development of a fuller record during *inter partes* review.

references' teachings would have been high pass filtering a desired engine torque signal. *See Dome Patent L.P. v. Lee*, 799 F.3d 1372, 1381 (Fed. Cir. 2015) (noting possibility of multiple obvious combinations of prior art).

Additionally, at this stage, we do not agree with Patent Owner's arguments that the references teach away. Patent Owner highlights certain ways in which Scherer's disclosure differs from certain teachings of the '565 patent and Suzuki. *See* Prelim. Resp. 22–23. Patent Owner does not explain, however, a persuasive reason that the differences result in the references criticizing, discrediting, or otherwise discouraging use of the invention recited in the claims of the '565 patent. *See in re Fulton*, 391 F.3d 1195, 1201 (Fed. Cir. 2004). Also, Patent Owner's argument that Scherer has "no consideration of a stratified charge operation mode for a DISI engine as the '565 patent teaches and the challenged claims of the '565 require" is not commensurate in scope with claims 1 and 7, which do not require stratified charge operation.[8]

For the foregoing reasons, we find Petitioner has demonstrated a reasonable likelihood of prevailing on its assertion that claims 1, 4, and 7 would have been obvious over Suzuki, Cullen, and Scherer.

F. Alleged Obviousness of Claims 2, 3, 5, and 6 over Suzuki, Cullen, Scherer, and Takahashi

1. Overview of Takahashi

Takahashi "is related to the method and system for simultaneous control of the throttle valve and fuel injection to ensure that the torque and

[8] Regarding claim 4, which does require "stratified mode" (Ex. 1001, 4:35–36), Petitioner relies on Suzuki as teaching stratified mode. Pet. 61–65.

air fuel ratio of the automobile engine will reach target values." Ex. 1008, 1:6–9.

Takahashi shows one embodiment of its "simultaneous torque and air fuel ratio control system" in Figure 2, which is reproduced below.

FIG. 2

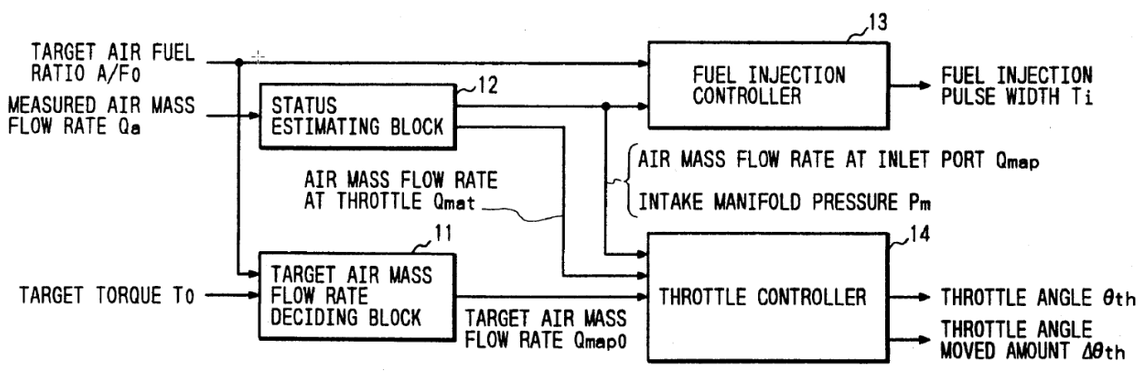

Figure 2 is a block diagram of simultaneous air fuel ratio and torque control with target air mass flow rate deciding block 11, status estimating block 12, fuel injection controller 13, and throttle controller 14.[9] *Id.* at 2:35–36, 3:16–29.

Target air mass flow rate deciding block 11 determines a target air mass flow rate based on target torque T_0, engine speed N, target air fuel ratio

[9] One portion of the text of Takahashi refers to "target air mass flow rate deciding block 15." Ex. 1008, 3:22–23. This appears to be a typographical error. It appears that the text should refer to "target air mass flow rate deciding block 11." In Figure 2, reference numeral 11 is used to identify "TARGET AIR MASS FLOW RATE DECIDING BLOCK 11." Additionally, another portion of the text of Takahashi states that "[b]lock 11 calculates the target air mass flow rate." *Id.* at 3:28.

A/F_0, spark advance θ_{adv}, constant K, and specified functions F_1, F_2, F_3. *Id.* at 3:28–40.

Takahashi describes the operation of status estimating block 12 in more detail with reference to Figure 3, which is reproduced below.

FIG. 3

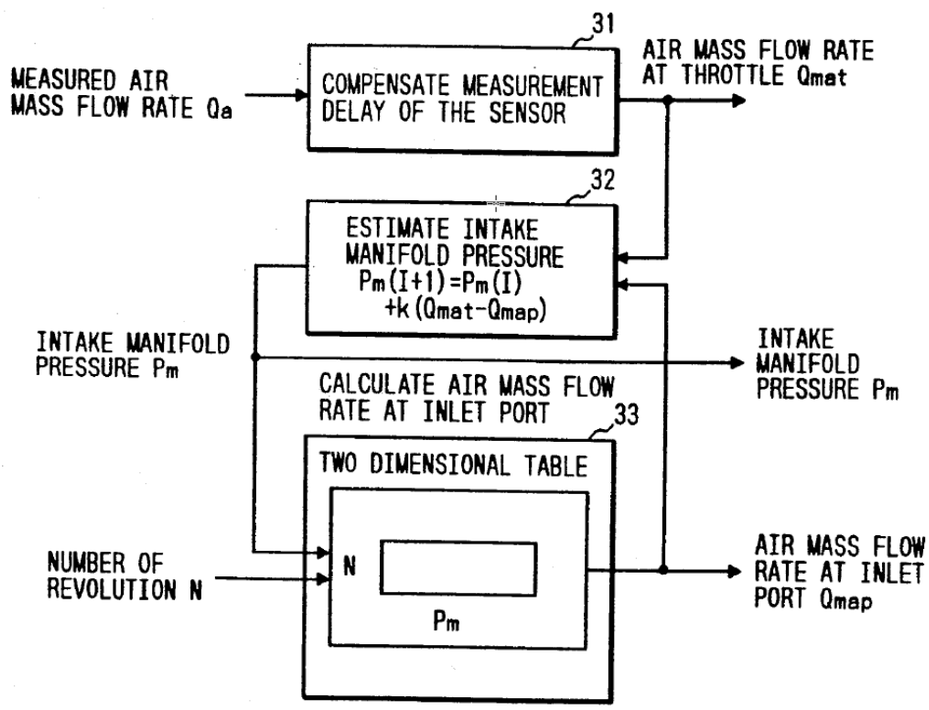

Figure 3 is a block diagram of the status estimating block, which includes blocks 31–33. *Id.* at 2:37–38, Fig. 3. Takahashi explains that

> In block 31, measured air mass flow rate Q_a is subjected to the response delay compensation for the air mass flow sensor. Namely, the air mass flow rate at throttle Q_{mat} is calculated and updated from measured air mass flow rate Q_a according to [an equation using certain variables].

Id. at 4:6–39. Takahashi also explains that

> In block 32, intake manifold pressure Pm calculated from the air mass flow rate at throttle Q_{mat} which is calculated in block 31,

and air mass flow rate at inlet port Q_{map} which is calculated by searching the table 33 according to [an equation using certain variables].

Id. at 4:49–68. Takahashi further explains that "[b]lock 33 calculates the air mass flow rate at inlet port Q_{map} by searching the two dimensional table for the intake manifold pressure and engine speed, where the data on air mass flow rate taken in during engine operation in the stationary status are stored." *Id.* at 5:1–5.

Takahashi discusses fuel injection control in greater detail in connection with Figure 4, which is reproduced below.

FIG. 4

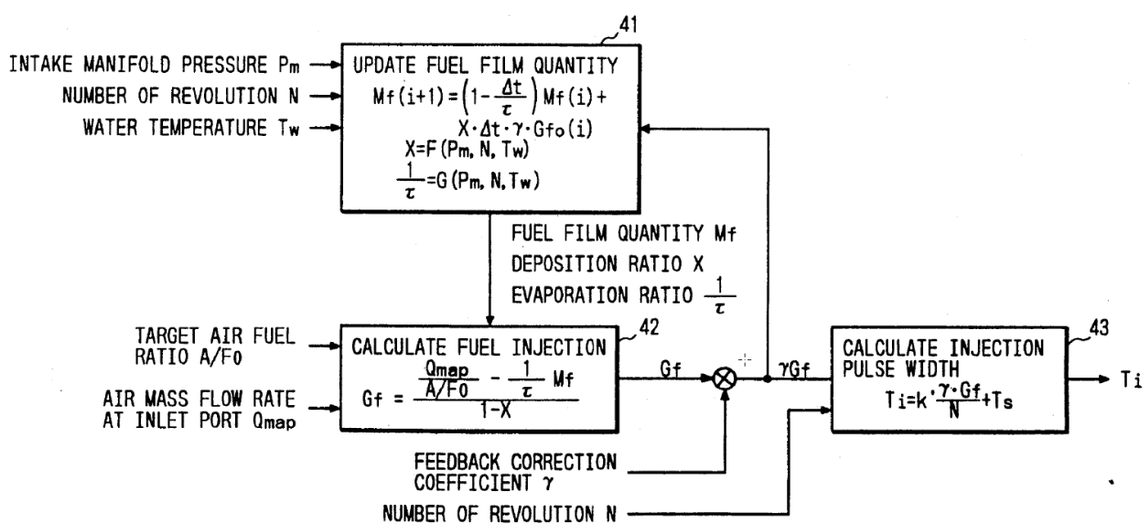

Figure 4 is a block diagram of the fuel injection control system, which includes blocks 41–43. *Id.* at 2:39–40, Fig. 4. Takahashi explains that "[b]lock 41 calculates the deposition ratio X of the injected fuel onto the intake manifold and evaporation ratio (1/τ) of deposited fuel according to [certain expressions]." *Id.* at 5:12–15. Takahashi also explains that "block 42 calculates the fuel injection quantity using the value calculated in block

41 according to [a certain expression]." *Id.* at 5:53–55. Based on another equation, the fuel injection pulse width Ti is calculated by block 43.[10] *Id.* at 5:66–6:9.

Takahashi discusses throttle control in greater detail with reference to Figure 5, which is reproduced below.

FIG. 5

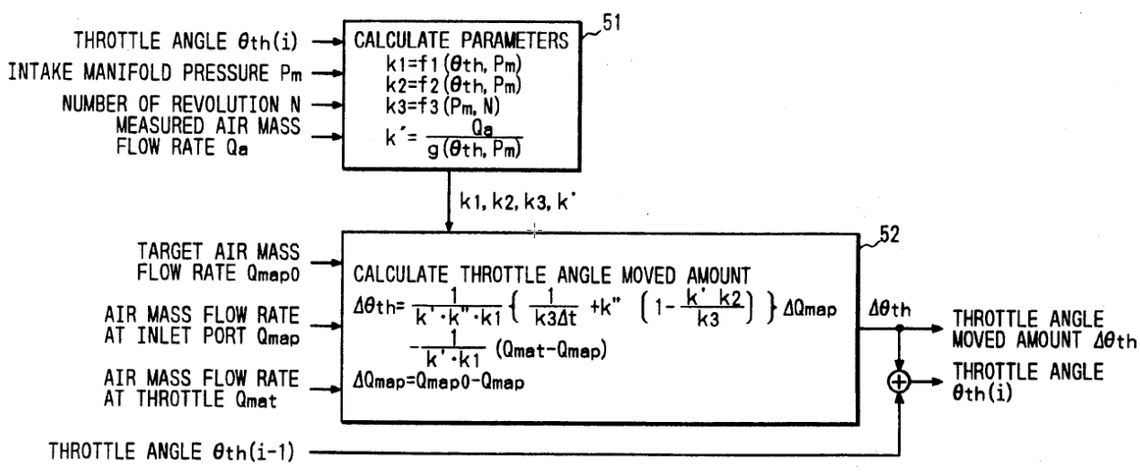

Figure 5 is a block diagram of the throttle control system, which includes blocks 51 and 52. *Id.* at 2:41–42; Fig. 5. Takahashi explains that "[b]lock 51 calculates the said various parameters. In block 52, throttle angle moved amount $\Delta\theta_{th}$ is calculated from the calculated parameters. Further, throttle angle move amount $\Delta\theta_{th}$ is added to the throttle angle θ_{th} (i – 1) one time unit before, thereby calculating the current throttle angle θ(i)." *Id.* at 7:62–68.

Takahashi discusses another embodiment "which detects the air mass flow rate indirectly from the measured intake manifold pressure." *Id.* at

[1010] Although the text states that "[b]lock 42 calculates the fuel injection pulse width Ti," this appears to be a typographical error, given that block 43 in Figure 4 includes the text "CALCULATE INJECTION PULSE WIDTH."

10:32–35. In connection with this disclosure, Takahashi presents Figure 14, which is reproduced below. *Id.* at 10:42–44.

FIG. 14

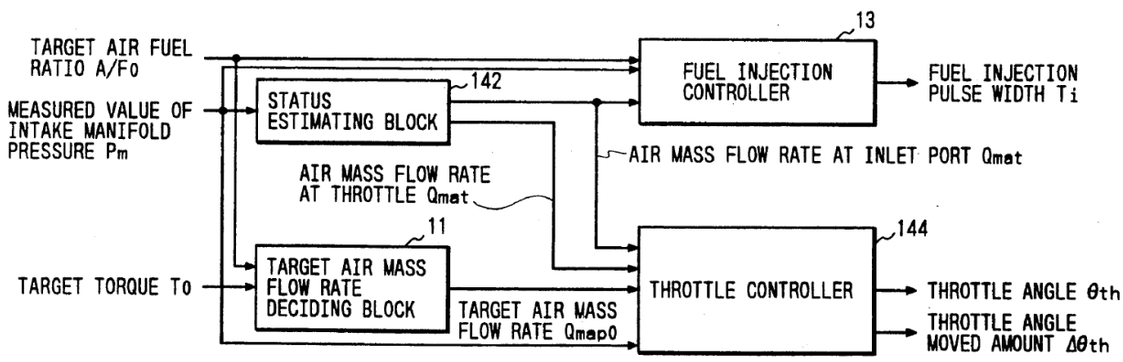

Figure 14 "is a block diagram of simultaneously controlling air-fuel ratio and torque, in said engine control system having a pressure sensor." *Id.* at 2:62–64. Takahashi explains that "[t]he target air fuel ratio, target torque and intake manifold pressure are input as major input signals, thereby calculating the fuel injection pulse, throttle angle and throttle angle moved amount." *Id.* at 10:44–47. In connection with this embodiment, Takahashi further discusses the status estimating block in more detail in connection with Figure 15, which is reproduced below.

FIG. 15

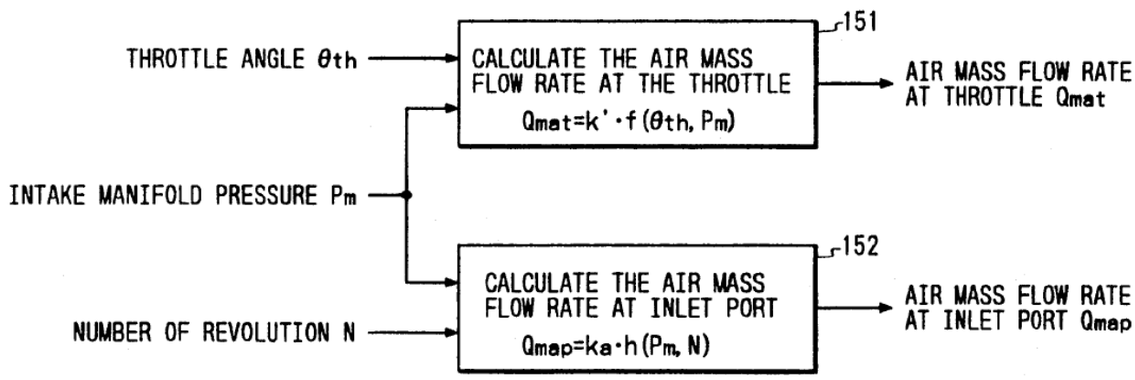

Figure 15 "is a block diagram of the status estimating block in FIG. 14." *Id.* at 2:65–66. Takahashi explains that

> Block 151 calculates the air mass flow rate at the throttle from the throttle angle and detected intake manifold pressure according to the Expression 12. Block 152 calculates the air mass flow rate at the inlet port from the intake manifold pressure and the detected engine speed according to [a certain expression].

Id. at 10:51–57.

2. Discussion

Claim 2 depends from claim 1, and claim 3 depends from claim 2. Ex. 1001, 4:23–28. Claim 5 depends from claim 4, and claim 6 depends from claim 5. *Id.* at 4:45–50. In addition to the limitations of independent claim 1, claim 2 recites "wherein the estimated air charge signal is produced by an air charge controller which receives as inputs an air charge demand signal, a throttle position signal, an engine speed signal, a manifold pressure signal and an air charge temperature signal." *Id.* at 4:23–26. Claim 3 adds that "the air charge demand signal is produced by an air charge demand controller which receives as inputs the desired torque signal, a desired spark

angle signal and a desired air/fuel ratio." *Id.* at 4:27–30.[11] Claims 5 and 6 contain the same limitations as claims 2 and 3, respectively. *Compare id.* at 4:23–30, *with id.* at 4:45–53.

Building on the challenge of claims 1 and 4 as obvious over Suzuki, Cullen, and Scherer, Petitioner cites Takahashi in combination with Suzuki, Cullen, and Scherer as teaching the limitations added by claims 2 3, 5, and 6. Pet. 77–88. Petitioner cites Takahashi, for example, as teaching status estimating block 142 and throttle controller 144 (Figure 14), which Petitioner contends correspond to the "air charge controller" recited in claim 2. *Id.* at 80–83. Petitioner asserts that Takahashi teaches performing its engine control based on the specific parameters recited in claims 2, 3, 5, and 6. *Id.* at 77–88. Petitioner asserts that it would have been obvious to implement these aspects of Takahashi's teachings with the teachings of Suzuki, Cullen, and and Scherer. *Id.* For example, Petitioner asserts that a person of ordinary skill in the art would have found it obvious "to modify Suzuki's torque control section to receive as signal inputs an air charge demand, a throttle position, an engine speed, a manifold pressure, and an air charge temperature so that Suzuki's control unit 20 estimates the cylinder air charge more accurately." *Id.* at 83. Petitioner elaborates that "a [person of ordinary skill in the art] would have been motivated to combine the teachings of Takahashi with Suzuki (and Cullen and Scherer) so that the control unit converges the engine output torque to the demand torque more precisely." *Id.* at 84.

[11] The Certificate of Correction on page 7 of Exhibit 1001 clarifies that the word "ratio" appears before the period.

At this stage, Patent Owner does not dispute Petitioner's challenge of claims 2, 3, 5, and 6 as allegedly obvious over Suzuki, Cullen, Scherer, and Takahashi separately from the challenge of independent claims 1, 4, and 7 as allegedly obvious over Suzuki, Cullen, and Scherer. *See generally* Prelim. Resp.

Our review of Petitioner's arguments and evidence persuades us that Petitioner has demonstrated a reasonable likelihood of prevailing on its challenge of claims 2, 3, 5, and 6 as allegedly obvious over Suzuki, Cullen, Scherer, and Takahashi.

III. CONCLUSION

Based on the evidence before us, we determine that Petitioner has demonstrated a reasonable likelihood of prevailing at least on its assertion that claims 1–7 of the '565 patent are unpatentable. Accordingly, we institute trial on all the challenges in the Petition.

At this stage of the proceeding, the Board has not made a final determination on the construction of any claim term or the patentability of any challenged claim.

IV. ORDER

Upon consideration of the record before us, it is:

ORDERED that, pursuant to 35 U.S.C. § 314(a), an *inter partes* review of claims 1–7 of the '565 patent is instituted with respect to all grounds set forth in the Petition; and

FURTHER ORDERED that, pursuant to 35 U.S.C. § 314(c) and 37 C.F.R. § 42.4(b), *inter partes* review of the '565 patent shall commence on the entry date of this Order, and notice is hereby given of the institution of a trial.

PETITIONER:

Michael Specht
Mspecht-ptab@sternekessler.com

Jason Fitzsimmons
Jfitzsimmons-ptab@sternekessler.com

Daniel Yonan
Dyonan-ptab@sternekessler.com

Kyle Conklin
Kconklin-ptab@sternekessler.com

John Higgins
Jhiggins-ptab@sternekessler.com

PATENT OWNER:

Timothy Devlin
Td-ptab@devlinlawfirm.com

Robyn Williams
rwilliams@devlinlawfirm.com

UNITED STATES PATENT AND TRADEMARK OFFICE

BEFORE THE PATENT TRIAL AND APPEAL BOARD

VOLKSWAGEN GROUP OF AMERICA, INC.,
Petitioner,

v.

MICHIGAN MOTOR TECHNOLOGIES LLC,
Patent Owner.

IPR2020-00445
Patent 6,581,565 B2

Before NEIL T. POWELL, BARBARA A. PARVIS, and
SEAN P. O'HANLON, *Administrative Patent Judges.*

POWELL, *Administrative Patent Judge*.

SCHEDULING ORDER

A. GENERAL INSTRUCTIONS

1. Initial and Additional Conference Calls

The parties are directed to contact the Board within a month of this Order if there is a need to discuss proposed changes to this Scheduling Order or proposed motions that have not been authorized in this Order or other prior Order or Notice. *See* Consolidated Trial Practice Guide ("Consolidated Practice Guide")[1] at 9–10, 65 (guidance in preparing for a conference call); *see also* 84 Fed. Reg. 64,280 (Nov. 21, 2019). A request for an initial conference call shall include a list of proposed motions, if any, to be discussed during the call.

The parties may request additional conference calls as needed. Any email requesting a conference call with the Board should: (a) copy all parties, (b) indicate generally the relief being requested or the subject matter of the conference call, (c) include multiple times when all parties are available, (d) state whether the opposing party opposes any relief requested, and (e) if opposed, either certify that the parties have met and conferred telephonically or in person to attempt to reach agreement, or explain why such meet and confer did not occur. The email may not contain substantive argument and, unless otherwise authorized, may not include attachments. *See* Consolidated Practice Guide at 9–10.

2. Protective Order

No protective order shall apply to this proceeding until the Board enters one. If either party files a motion to seal before entry of a protective order, a jointly proposed protective order shall be filed as an exhibit with the

[1] Available at https://www.uspto.gov/TrialPracticeGuideConsolidated.

motion. It is the responsibility of the party whose confidential information is at issue, not necessarily the proffering party, to file the motion to seal.[2] The Board encourages the parties to adopt the Board's default protective order if they conclude that a protective order is necessary. *See* Consolidated Practice Guide at 107–122 (App. B, Protective Order Guidelines and Default Protective Order). If the parties choose to propose a protective order deviating from the default protective order, they must submit the proposed protective order jointly along with a marked-up comparison of the proposed and default protective orders showing the differences between the two and explain why good cause exists to deviate from the default protective order.

The Board has a strong interest in the public availability of trial proceedings. Redactions to documents filed in this proceeding should be limited to the minimum amount necessary to protect confidential information, and the thrust of the underlying argument or evidence must be clearly discernible from the redacted versions. We also advise the parties that information subject to a protective order may become public if identified in a final written decision in this proceeding, and that a motion to expunge the information will not necessarily prevail over the public interest in maintaining a complete and understandable file history. *See* Consolidated Practice Guide at 21–22.

3. Discovery Disputes

The Board encourages parties to resolve disputes relating to discovery on their own. To the extent that a dispute arises between the parties relating to discovery, the parties must meet and confer to resolve such a dispute

[2] If the entity whose confidential information is at issue is not a party to the proceeding, please contact the Board.

before contacting the Board. If attempts to resolve the dispute fail, a party may request a conference call with the Board.

4. Testimony

The parties are reminded that the Testimony Guidelines appended to the Consolidated Practice Guide at 127–130 (App. D, Testimony Guidelines) apply to this proceeding. The Board may impose an appropriate sanction for failure to adhere to the Testimony Guidelines. 37 C.F.R. § 42.12. For example, reasonable expenses and attorneys' fees incurred by any party may be levied on a person who impedes, delays, or frustrates the fair examination of a witness.

5. Cross-Examination

Except as the parties might otherwise agree, for each due date: Cross-examination ordinarily takes place after any supplemental evidence is due. 37 C.F.R. § 42.53(d)(2).

Cross-examination ordinarily ends no later than a week before the filing date for any paper in which the cross-examination testimony is expected to be used. *Id.*

6. Motion to Amend

Patent Owner may file a motion to amend without prior authorization from the Board. Nevertheless, Patent Owner must confer with the Board before filing such a motion. 37 C.F.R. § 42.121(a). To satisfy this requirement, Patent Owner should request a conference call with the Board no later than two weeks prior to DUE DATE 1. *See* Section B below regarding DUE DATES.

Patent Owner has the option to receive preliminary guidance from the Board on its motion to amend. *See* Notice Regarding a New Pilot Program

Concerning Motion to Amend Practice and Procedures in Trial Proceedings under the America Invents Act before the Patent Trial and Appeal Board, 84 Fed. Reg. 9497 (Mar. 15, 2019) ("MTA Pilot Program Notice"); *see also* Consolidated Practice Guide at 67. If Patent Owner elects to request preliminary guidance from the Board on its motion, it must do so in its motion to amend filed on DUE DATE 1.

Any motion to amend and briefing related to such a motion shall generally follow the practices and procedures described in MTA Pilot Program Notice unless otherwise ordered by the Board in this proceeding. The parties are further directed to the Board's Guidance on Motions to Amend in view of *Aqua Products* (https://go.usa.gov/xU6YV), and *Lectrosonics, Inc. v. Zaxcom, Inc.*, IPR2018-01129, Paper 15 (PTAB Feb. 25, 2019) (precedential).

At DUE DATE 3, Patent Owner has the option to file a reply to the opposition to the motion to amend and preliminary guidance, or a revised motion to amend. *See* MTA Pilot Program Notice at 9500–01. Patent Owner may elect to file a revised motion to amend even if Patent Owner did not request to receive preliminary guidance on its motion to amend. A revised motion to amend must provide amendments, arguments, and/or evidence in a manner that is responsive to issues raised in the preliminary guidance and/or Petitioner's opposition.

If Patent Owner files a revised motion to amend, the Board shall enter a revised scheduling order setting the briefing schedule for that revised motion and adjusting other due dates as needed. *See* MTA Pilot Program Notice at 9501, App. 1B.

As also discussed in the MTA Pilot Program Notice, if the Board issues preliminary guidance on the motion to amend, and Patent Owner files neither a reply to the opposition to the motion to amend nor a revised motion to amend at DUE DATE 3, Petitioner may file a reply to the Board's preliminary guidance, no later than three (3) weeks after DUE DATE 3. The reply may only respond to the preliminary guidance. Patent Owner may file a sur-reply in response to Petitioner's reply to the Board's preliminary guidance. The sur-reply may only respond to arguments made in the reply and must be filed no later than three (3) weeks after Petitioner's reply. *See* MTA Pilot Program Notice at 9502. No new evidence may accompany the reply or the sur-reply in this situation.

7. Oral Argument

Requests for oral argument must comply with 37 C.F.R. § 42.70(a). To permit the Board sufficient time to schedule the oral argument, the parties may not stipulate to an extension of the request for oral argument beyond the date set forth in the Due Date Appendix.

Unless the Board notifies the parties otherwise, oral argument, if requested, will be held at the USPTO headquarters in Alexandria. The parties may request that the oral argument instead be held at any USPTO Regional Office. The parties should meet and confer, and jointly propose the parties' preference at the initial conference call, if requested. Alternatively, the parties may jointly file a paper stating their preference for the hearing location within one month of this Order. Note that the Board may not be able to honor the parties' preference of hearing location due to, among other things, the availability of hearing room resources and the needs

of the panel. The Board will consider the location request and notify the parties accordingly if a request for change in location is granted.

Seating in the Board's hearing rooms may be limited, and will be available on a first-come, first-served basis. If either party anticipates that more than five (5) individuals will attend the argument on its behalf, the party should notify the Board as soon as possible, and no later than the request for oral argument. Parties should note that the earlier a request for accommodation is made, the more likely the Board will be able to accommodate additional individuals..

B. DUE DATES

This Order sets due dates for the parties to take action after institution of the proceeding. The parties may stipulate different dates for DUE DATES 1, 5, and 6, as well as the portion of DUE DATE 2 related to Petitioner's reply (earlier or later, but no later than DUE DATE 3 for Patent Owner's sur-reply) and the portion of DUE DATE 3 related to Patent Owner's sur-reply (earlier or later, but no later than DUE DATE 7). The parties may not stipulate to a different date for the portion of DUE DATE 2 related to Petitioner's opposition to a motion to amend, or for the portion of DUE DATE 3 related to Patent Owner's reply to an opposition to a motion to amend (or Patent Owner's revised motion to amend) without prior authorization from the Board. In stipulating to move any due dates in the scheduling order, the parties must be cognizant that the Board requires four weeks after the filing of an opposition to the motion to amend (or the due date for the opposition, if none is filed) for the Board to issue its preliminary guidance, if requested by Patent Owner. A notice of the stipulation,

specifically identifying the changed due dates, must be promptly filed. The parties may not stipulate an extension of DUE DATES 4, 7, and 8.

In stipulating different times, the parties should consider the effect of the stipulation on times to object to evidence (37 C.F.R. § 42.64(b)(1)), to supplement evidence (§ 42.64(b)(2)), to conduct cross-examination (§ 42.53(d)(2)), and to draft papers depending on the evidence and cross-examination testimony.

1. DUE DATE 1

Patent Owner may file—

a. A response to the petition (37 C.F.R. § 42.120). If Patent Owner elects not to file a response, Patent Owner must arrange a conference call with the parties and the Board. Patent Owner is cautioned that any arguments not raised in the response may be deemed waived.

b. A motion to amend the patent (37 C.F.R. § 42.121).

2. DUE DATE 2

Petitioner may file a reply to the Patent Owner's response.

Petitioner may file an opposition to the motion to amend.

3. DUE DATE 3

Patent Owner may file a sur-reply to Petitioner's reply.

Patent Owner may also file either:

a. a reply to the opposition to the motion to amend and/or preliminary guidance (if provided); or

b. a revised motion to amend.

NOTE: If Patent Owner files neither of the above papers (a reply to the opposition or a revised motion to amend), and the Board has issued preliminary guidance, Petitioner may file a reply to the preliminary

guidance, no later than three (3) weeks after DUE DATE 3. Patent Owner may file a sur-reply to Petitioner's reply to the preliminary guidance no later than three (3) weeks after Petitioner's reply.

4. DUE DATE 4

Either party may file a request for oral argument (may not be extended by stipulation).

5. DUE DATE 5

Petitioner may file a sur-reply to Patent Owner's reply to the opposition to the motion to amend.

Either party may file a motion to exclude evidence (37 C.F.R. § 42.64(c)).

6. DUE DATE 6

Either party may file an opposition to a motion to exclude evidence.

Either party may request that the Board hold a pre-hearing conference.

7. DUE DATE 7

Either party may file a reply to an opposition to a motion to exclude evidence.

8. DUE DATE 8

The oral argument (if requested by either party) shall be held on this date. Approximately one month prior to the argument, the Board will issue an order setting the start time of the hearing and the procedures that will govern the parties' arguments.

DUE DATE APPENDIX

DUE DATE 1 ..... October 29, 2020

Patent Owner's response to the petition

Patent Owner's motion to amend the patent

DUE DATE 2 ..... January 21, 2021

Petitioner's reply to Patent Owner's response to petition

Petitioner's opposition to motion to amend

DUE DATE 3 ..... March 4, 2021

Patent Owner's sur-reply to reply

Patent Owner's reply to opposition to motion to amend
(or Patent Owner's revised motion to amend)

DUE DATE 4 ..... March 25, 2021

Request for oral argument (may not be extended by stipulation)

DUE DATE 5 ..... April 15, 2021

Petitioner's sur-reply to reply to opposition to motion to amend

Motion to exclude evidence

DUE DATE 6 ..... April 22, 2021

Opposition to motion to exclude

Request for prehearing conference

DUE DATE 7 ..... April 29, 2021

Reply to opposition to motion to exclude

DUE DATE 8 ..... May 12, 2021

Oral argument (if requested)

PETITIONER:

Michael Specht
Mspecht-ptab@sternekessler.com

Jason Fitzsimmons
Jfitzsimmons-ptab@sternekessler.com

Daniel Yonan
Dyonan-ptab@sternekessler.com

Kyle Conklin
kconklin-ptab@sternekessler.com

Stephen Merrill
smerrill-ptab@sternekessler.com

PATENT OWNER:

Timothy Devlin
Td-ptab@devlinlawfirm.com

UNITED STATES PATENT AND TRADEMARK OFFICE

BEFORE THE PATENT TRIAL AND APPEAL BOARD

VOLKSWAGEN GROUP OF AMERICA, INC.,
Petitioner,

v.

MICHIGAN MOTOR TECHNOLOGIES LLC,
Patent Owner.

IPR2020-00445
Patent 6,581,565 B2

Before NEIL T. POWELL, BARBARA A. PARVIS, and
SEAN P. O'HANLON, *Administrative Patent Judges*.

POWELL, *Administrative Patent Judge*.

DECISION
Granting Institution of *Inter Partes* Review
35 U.S.C. § 314

I. INTRODUCTION

A. Background

Volkswagen Group of America, Inc. ("Petitioner") filed a Petition (Paper 3, "Pet.") to institute an *inter partes* review of claims 1–7 of U.S. Patent No. 6,581,565 B2 (Ex. 1001, "the '565 patent"). Michigan Motor Technologies LLC ("Patent Owner") filed a Preliminary Response. Paper 7 ("Prelim. Resp."). Pursuant to our authorization, Petitioner filed a Reply (Paper 9, "Pet. Reply"), and Patent Owner filed a Sur-reply (Paper 10, "Sur-reply").

We have authority to determine whether to institute an *inter partes* review. 35 U.S.C. § 314(b) (2018); 37 C.F.R. § 42.4(a) (2020). We may not institute an *inter partes* review "unless . . . there is a reasonable likelihood that the petitioner would prevail with respect to at least 1 of the claims challenged in the petition." 35 U.S.C. § 314(a). The Supreme Court has held that a decision to institute under 35 U.S.C. § 314 may not institute review on less than all claims challenged in the petition. *SAS Inst. Inc. v. Iancu*, 138 S. Ct. 1348, 1355–56 (2018). Moreover, if the PTAB institutes a trial, the PTAB will institute on all challenges raised in the petition. *See* Patent Trial and Appeal Board Consolidated Trial Practice Guide ("CTPG") 64 (Nov. 2019), https://www.uspto.gov/sites/default/files/documents/tpgnov.pdf ("The Board will not institute on fewer than all claims or all challenges in a petition.").

Applying those standards, and upon consideration of the information presented in the Petition, we determine that Petitioner has established a reasonable likelihood of success in proving that at least one claim of the '565 patent is unpatentable. Accordingly, we institute an *inter partes* review

as to all challenged claims of the ’565 patent on all grounds raised in the Petition. We base our factual findings and conclusions at this stage of the proceeding on the evidentiary record developed so far. This is not a final decision as to the construction of any claim term or the patentability of any claim.

B. Related Proceeding

The parties identify the following matter as related to the ’565 patent (Pet. 2; Paper 5, 2):

> *Michigan Motor Technologies LLC v. Volkswagen AG*, No. 2:19-cv-10485 (E.D. Mich.).

Additionally, in IPR2020-00444, Petitioner has filed another petition challenging claims 1–7 of the ’565 patent. Pet. 2.

C. The ’565 Patent

The ’565 patent relates to torque control for internal combustion engines. Ex. 1001, code (57). The ’565 patent describes an exemplary engine in connection with Figure 1, which is reproduced below.

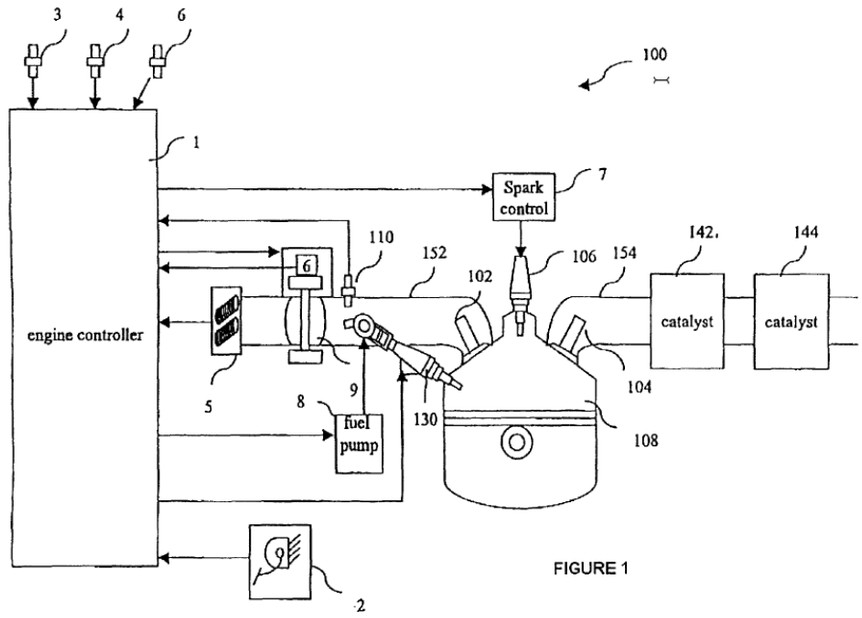

FIGURE 1

Figure 1 shows direct injection spark ignition engine 100, which includes air intake valve 102, exhaust valve 104, spark plug 106, combustion chamber 108, manifold absolute pressure sensor 110, fuel injector 130, three way catalytic converter 142, Nox trap/catalyst 144, air-intake manifold 152, and exhaust manifold 154. *Id.* at 2:40–56.

Direct injection spark ignition engine 100 also includes engine controller 1. *Id.* at 2:40–42. Accelerator pedal and sensor assembly 2, engine speed sensor 3, engine temperature sensor 4, air charge temperature sensor 5, manifold absolute pressure sensor 110, and throttle position indicator 6 all provide signals to engine controller 1. *Id.* at 2:42–46.

Air and fuel mix in combustion chamber 108. *Id.* at 2:47–49. Throttle 9 controls an air charge, which travels via intake manifold 152 through intake air valve 102. *Id.* at 2:48–50. Fuel injector 130 injects the fuel into combustion chamber 108 directly. *Id.* at 2:47–48.

Spark control unit 7 operates spark plug 106 to produce a spark for igniting the air/fuel mixture. *Id.* at 2:51–53. The resulting combustion produces exhaust gases, which exit through exhaust valve 104 to exhaust manifold 154. *Id.* at 2:53–55.

The '565 patent discusses calculating a desired output torque in connection with Figure 2, which is reproduced below.

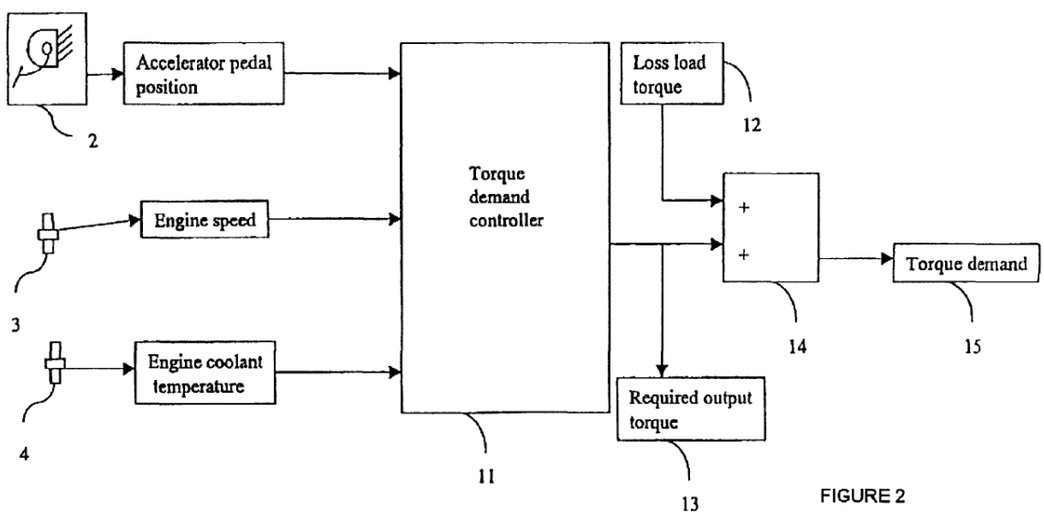

FIGURE 2

Figure 2 is a block diagram showing torque demand controller 11, which forms part of engine controller 1. *Id.* at 2:34–35, 2:57–58.

Torque demand controller 11 receives various signals and outputs torque demand signal 15. *Id.* at 2:58–67. Torque demand controller 11 receives an accelerator pedal position signal from accelerator pedal and sensor assembly 2, an engine speed signal from engine speed sensor 3, and an engine temperature signal from engine temperature sensor 4. *Id.* at 2:59–63. Based on these inputs, torque demand controller 11 determines required output torque signal 13, to which loss torque load signal 12 is added, which produces torque demand signal 15. *Id.* at 2:57–67.

The ’565 patent discusses how the torque demand signal is used in connection with Figure 3, which is reproduced below.

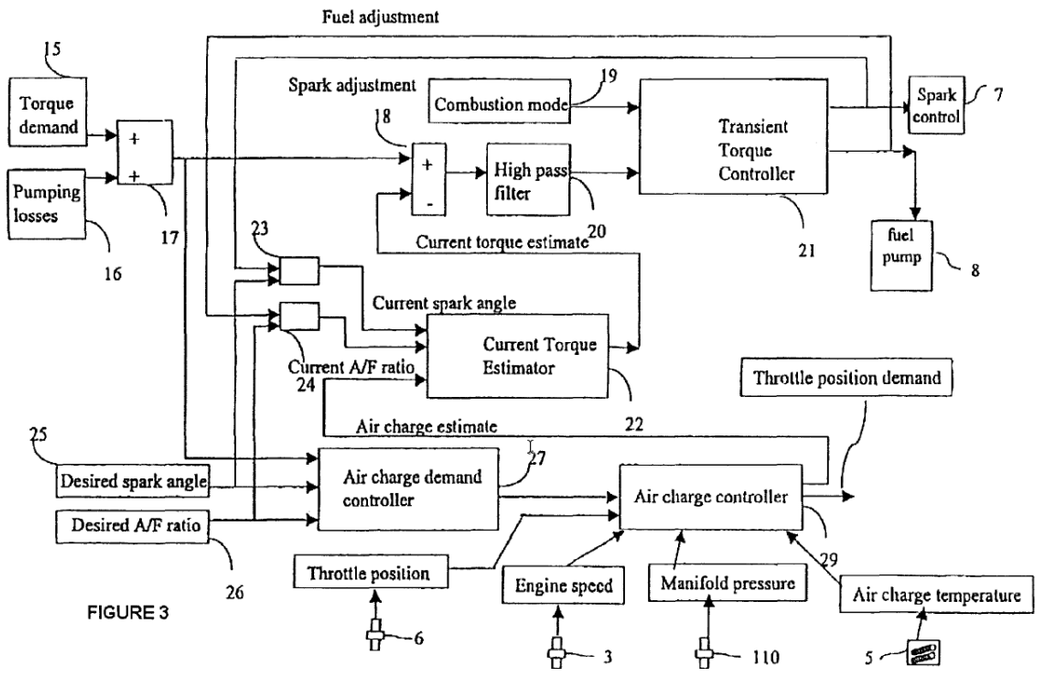

FIGURE 3

Figure 3 “is a block diagram of a torque producer.” *Id.* at 2:36.

The torque producer of Figure 3 includes adder 17. *Id.* at 3:1–6. Adder 17 receives torque demand signal 15, as well as pumping losses signal 16, “which represents losses due to the inherent losses in the engine cycle.” *Id.* at 3:1–4. Adder 17 generates a desired torque signal.

Air charge demand controller 27 receives the desired torque signal generated by adder 17, as well as desired spark angle signal 25 and desired air fuel ratio signal 26. *Id.* at 3:7–9. Air charge demand controller 27 produces an air charge demand signal, which it provides to air charge controller 29. *Id.* at 3:13–15.

Based on the air charge demand signal and various other inputs, air charge controller 29 provides multiple outputs. *Id.* at 3:13–22. Air charge controller 29 sends a desired throttle position signal to throttle 9. *Id.* at

3:19–21. Air charge controller 29 also produces "a signal representing an estimate of the air charge." *Id.* at 3:19–22.

Current torque estimator 22 receives the air charge estimate signal, along with a signal representing the current air/fuel ratio and a signal representing the current spark angle. *Id.* at 3:27–33. Based on these signals, current torque estimator 22 produces "a signal representing an estimate of the current torque." *Id.* at 3:29–33.

Comparator 18 compares the estimate of the current torque to the desired torque signal, producing an error signal. *Id.* at 3:34–36. High pass filter 20 filters the error signal. *Id.*

Transient torque controller 21 uses the filtered error signal "to generate signals for temporarily adjusting the torque produced by the engine 100." *Id.* at 3:36–39. Depending on whether combustion mode signal 19 indicates engine 100 is operating in stratified mode or homogeneous mode, either a fuel adjustment signal is generated to adjust fueling, or a spark adjustment signal is generated to adjust spark timing. *Id.* at 3:40–50.

D. Illustrative Claim

The '565 patent includes seven claims, all of which are challenged. Claims 1 and 7 are independent. Claims 2–6 depend, directly or indirectly, from claim 1. Claim 1 is illustrative and reproduced below.

> 1. A device for controlling a torque output of an engine, the device comprising:
> a torque demand controller for generating a torque demand signal; and
> a torque producer which receives the torque demand signal, the torque producer includes:
> an estimator which receives as inputs a current spark angle signal, a current air/fuel ratio signal and an

estimated air charge signal and outputs an estimated torque signal;

a comparator which receives as inputs the estimated torque signal and a desired torque signal and outputs a difference signal;

a high pass filter which receives as an input the difference signal and outputs a filtered difference signal in which low frequency components are absent; and

a transient torque controller which receives as an input the filtered difference signal and outputs a fuel adjustment signal and a spark adjustment signal.

Id. at 4:2–22.

E. Applied References

Petitioner relies upon the following references:

Kelsuke Suzuki et al., U.S. Patent No. 6,006,717 (Ex. 1005, "Suzuki"), issued Dec. 28, 1999.

Michael J. Cullen et al., U.S. Patent No. 5,241,855 (Ex. 1006, "Cullen"), issued Sept. 7, 1993.

Matthias Scherer et al., U.S. Patent No. 6,047,681 (Ex. 1007, "Scherer"), issued Apr. 11, 2000.

Shinsuke Takahashi et al., U.S. Patent No. 5,282,449 (Ex. 1008, "Takahashi"), issued Feb. 1, 1994.

Jerry Dean Robichaux et al., European Patent Application No. EP 1 076 165 A2 (Ex. 1020, "Robichaux"), published Feb. 14, 2001.

Pet. 4–5. Petitioner also relies upon the Declaration of C. Arthur MacCarley, Ph.D., PE. Ex. 1003. Patent Owner relies on the Declaration of Russell A. Leonard, Jr., Ph.D. Ex. 2001.

F. Asserted Grounds of Unpatentability

Petitioner challenges the patentability of claims 1–7 of the '565 patent based on the following grounds. Pet. 5.

Claims Challenged	35 U.S.C. §	Reference(s)/Basis
1, 7	103[1]	Robichaux, Scherer
2, 3	103	Robichaux, Scherer, Takahashi
4	103	Robichaux, Scherer, Suzuki
5, 6	103	Robichaux, Scherer, Suzuki, Takahashi

II. ANALYSIS

A. Level of Ordinary Skill in the Art

Petitioner contends that a person having ordinary skill in the art at the time of the invention ("POSA") would have had "a B.S. degree in Electrical Engineering or Mechanical Engineering (or equivalent), as well as at least 2–4 years of academic or industry experience in the relevant field of engine control systems." Pet. 16–17 (citing Ex. 1003 ¶¶ 40–41).

Patent Owner contends that a person having ordinary skill in the art at the time of the invention is "a person with (1) a B.S. in mechanical engineering or a closely related field with three or more years of experience in either engine systems or engine control systems or (2) at least a M.S. in mechanical engineering." Prelim. Resp. 13 (citing Ex. 2001 ¶ 14.)

Thus, both parties propose substantially similar definitions of the level of ordinary skill in the art, both requiring a bachelor's degree in mechanical engineering or the equivalent with either a few years of industry or academic (such as that required to obtain a master's degree in mechanical engineering)

[1] The Leahy-Smith America Invents Act ("AIA"), Pub. L. No. 112-29, 125 Stat. 284, 287–88 (2011), amended 35 U.S.C. § 103. Because the '565 patent was filed before March 16, 2013, the effective date of the relevant amendment, the pre-AIA version of § 103 applies.

experience. At this stage, we find Petitioner's description to be more consistent with the disclosures of the '565 patent and the prior art of record, as it is focused on the field of engine control systems. *See* Ex. 1001, 1:6–8 ("This invention relates to an engine torque controller for spark ignition engines . . . ."); Ex. 1007 ("The invention provides a process and an apparatus for controlling the engine torque of an internal-combustion engine."); Ex. 1020 ("The present invention is directed to a system and method for controlling engine torque . . . ."). Accordingly, we adopt Petitioner's definition as our own for purposes of this Decision. *See, e.g.*, *In re GPAC Inc.*, 57 F.3d 1573, 1579 (Fed. Cir. 1995).[2]

B. Claim Construction

We construe claims "using the same claim construction standard that would be used to construe the claim in a civil action under 35 U.S.C. 282(b), including construing the claim in accordance with the ordinary and customary meaning of such claim as understood by one of ordinary skill in the art and the prosecution history pertaining to the patent." 37 C.F.R. § 42.100(b); *see also Phillips v. AWH Corp.*, 415 F.3d 1303 (Fed. Cir. 2005) (en banc).

In this context, claim terms "are generally given their ordinary and customary meaning" as understood by a person of ordinary skill in the art in question at the time of the invention. *Phillips*, 415 F.3d at 1312–13; *see also CCS Fitness, Inc. v. Brunswick Corp.*, 288 F.3d 1359, 1366 (Fed. Cir. 2002)

[2] If Patent Owner argues a different level of ordinary skill in the art in its Response, the parties are encouraged to address whether there are any material differences between the two proposals and what impact, if any, the different level has on the obviousness analysis.

(There is "a 'heavy presumption' that a claim term carries its ordinary and customary meaning."). "In determining the meaning of the disputed claim limitation, we look principally to the intrinsic evidence of record, examining the claim language itself, the written description, and the prosecution history, if in evidence." *DePuy Spine, Inc. v. Medtronic Sofamor Danek, Inc.*, 469 F.3d 1005, 1014 (Fed. Cir. 2006) (citing *Phillips*, 415 F.3d at 1312–17). Extrinsic evidence is "less significant than the intrinsic record in determining 'the legally operative meaning of claim language.'" *Phillips*, 415 F.3d at 1317 (quoting *C.R. Bard, Inc. v. U.S. Surgical Corp.*, 388 F.3d 858, 862 (Fed. Cir. 2004)).

Only those claim terms that are in controversy need to be construed, and only to the extent necessary to resolve the controversy. *See Nidec Motor Corp. v. Zhongshan Broad Ocean Motor Co.*, 868 F.3d 1013, 1017 (Fed. Cir. 2017) (stating that "we need only construe terms 'that are in controversy, and only to the extent necessary to resolve the controversy'" (quoting *Vivid Techs., Inc. v. Am. Sci. & Eng'g, Inc.*, 200 F.3d 795, 803 (Fed. Cir. 1999))).

Petitioner argues that the claims "should receive their plain and ordinary meaning, in the context of the '565 patent specification, under the *Phillips* standard." Pet. 17. Patent Owner agrees. Prelim. Resp. 14. For purposes of resolving the parties' patentability disputes, we need not construe expressly any claim language.

C. Discretion under 35 U.S.C. § 314

Under § 314(a), we have discretion to deny institution of an *inter partes* review. *Cuozzo Speed Techs., LLC v. Lee*, 136 S. Ct. 2131, 2140 (2016); *SAS Inst. Inc. v. Iancu*, 138 S. Ct. 1348, 1356 (2018); *Harmonic Inc.*

v. Avid Tech., Inc., 815 F.3d 1356, 1367 (Fed. Cir. 2016) ("[T]he PTO is permitted, but never compelled, to institute an IPR proceeding."); *see also* 37 C.F.R. § 42.4(a) ("The Board institutes the trial on behalf of the Director.").

In deciding whether to institute an *inter partes* review, we consider the guidance in the Consolidated Trial Practice Guide, which states

> Based on the Board's prior experience, one petition should be sufficient to challenge the claims of a patent in most situations. Two or more petitions filed against the same patent at or about the same time . . . may place a substantial and unnecessary burden on the Board and the patent owner and could raise fairness, timing, and efficiency concerns.

CTPG 59.

More detailed guidance regarding whether we exercise our discretion to deny institution in the event of multiple petitions challenging the same patent appears in our precedential decision *General Plastic Industrial Co., Ltd. v. Canon Kabushiki Kaisha*, IPR2016-01357, Paper 19 at 15–16 (PTAB Sept. 6, 2017) (precedential). *General Plastic* sets forth the following factors:

1. whether the same petitioner previously filed a petition directed to the same claims of the same patent;
2. whether at the time of filing of the first petition the petitioner knew of the prior art asserted in the second petition or should have known of it;
3. whether at the time of filing of the second petition the petitioner already received the patent owner's preliminary response to the first petition or received the Board's decision on whether to institute review in the first petition;
4. the length of time that elapsed between the time the petitioner learned of the prior art asserted in the second petition and the filing of the second petition;

5. whether the petitioner provides adequate explanation for the time elapsed between the filings of multiple petitions directed to the same claims of the same patent;
6. the finite resources of the Board; and
7. the requirement under 35 U.S.C. § 316(a)(11) to issue a final determination not later than 1 year after the date on which the Director notices institution of review.

Id. at 16.

Here, Petitioner has filed on the same day two petitions challenging claims 1–7 of the '565 patent. In IPR2020-00444, Petitioner presents two obviousness grounds, one based on Suzuki, Cullen, and Scherer, the other based on Suzuki, Cullen, Scherer, and Takahashi. IPR2020-00444, Paper 2 at 5. In this proceeding, Petitioner presents four obviousness challenges, the first based on Robichaux and Scherer, each of the others based on Robichaux and Scherer combined with one or both of Takahashi and Suzuki. Pet. 5.

Petitioner filed a Notice of Ranking. Paper 2 ("Notice"). Arguing that "institution of both petitions is appropriate," the Notice nonetheless ranks the IPR2020-00444 petition above the Petition in this proceeding. Notice 1. The Notice then explains why Petitioner believes institution of both petitions is appropriate. *Id.* at 3–5. Petitioner asserts that all of the *General Plastic* factors weigh in favor of instituting both petitions. *Id.* Because the petitions were filed on the same day, Petitioner contends that the inefficiency and prejudice concerns underlying *General Plastic* factors 1–5 do not apply with respect to the Petition here and in IPR2020-00444. *Id.* at 3. Therefore, Petitioner argues *General Plastic* factors 1–5 weigh in favor of instituting both petitions. *Id.*

Petitioner notes a similarity between *General Plastic* factor 6, "the finite resources of the Board," and the CTPG's concern that multiple petitions could "place a substantial and unnecessary burden on the Board and the patent owner and could reduce fairness, timing, and efficiency concerns" (CTPG 59). Notice 3–4. Petitioner argues that its filing of two petitions presents little additional burden for the Board or Patent Owner. *Id.* at 4. Petitioner explains that each petition has only one primary reference and, in aggregate between the two petitions, each claim is subject to only two challenges. *Id.* Petitioner also notes that the references asserted in the petitions overlaps significantly, thereby minimizing any additional burden of instituting a second petition. *Id.* Petitioner asserts that "[o]n balance, the incremental burden on the Board or Patent Owner is significantly outweighed by the potential prejudice to Petitioner VWGoA from a discretionary denial of an *inter partes* review against a patent it was accused of infringing." *Id.* Thus, Petitioner contends, *General Plastic* factor 6 weighs in favor of instituting both petitions. *Id.*

Petitioner argues that *General Plastic* factor 7 also weighs in favor of instituting both petitions

> because these two petitions are being filed on the same day, and thus their respective schedules (or schedule if consolidated) may be aligned and will not hinder the Board's ability to issue a final determination within one year of institution. Indeed, VWGoA would be amenable to consolidated depositions and hearings in these two proceedings, further minimizing any burden on the Board and Patent Owner.

Notice 5.

Patent Owner does not dispute Petitioner's arguments that its simultaneous filing of two petitions neither prejudices Patent Owner nor

unduly burdens the Board or Patent Owner. *See generally* Prelim. Resp.; Sur-reply.

We agree with Petitioner that a discretionary denial of one petition could unduly prejudice Petitioner, as the two petitions have different vulnerabilities. In this proceeding, Petitioner needs only two references to address independent claims 1 and 7, but asserts Robichaux as prior art under 35 U.S.C. § 102(a), creating the possibility of Patent Owner swearing behind Robichaux. In IPR2020-00444, on the other hand, all of the references are asserted as prior art under 35 U.S.C. § 102(b), forestalling any attempt to swear behind the references, but the challenge of independent claims 1 and 7 relies on three references, creating additional vulnerability to arguments from Patent Owner regarding the references' teachings and the rationales for combining the references.

Taking a holistic view of the unique circumstances in this proceeding, we find this constitutes a rare instance in which we should decline to exercise our discretion to deny the Petition due to Petitioner's filing of two petitions.

D. Discretion under 35 U.S.C. § 325(d)

In *Advanced Bionics, LLC v. Med-El Elektromedizinische Geräte GMBH*, IPR2019-01469, Paper 6 (PTAB Feb. 13, 2020) (precedential) ("*Advanced Bionics*"), the Board applied a two-part framework in considering whether to exercise discretion to deny institution under § 325(d): "(1) whether the same or substantially the same art previously was presented to the Office or whether the same or substantially the same arguments previously were presented to the Office; and (2) if either condition of [the] first part of the framework is satisfied, whether the

petitioner has demonstrated that the Office erred in a manner material to the patentability of challenged claims." *Advanced Bionics* at 8.

Within this two-part framework, the Board considers a number of non-exclusive factors in evaluating whether to exercise its discretion under § 325(d). *See Becton, Dickinson & Co. v. B. Braun Melsungen AG*, IPR2017-01586, Paper 8 (PTAB Dec. 15, 2017) (precedential as to § III.C.5, first para.) ("*Becton, Dickinson*"); *see also Advanced Bionics* at 9–11. The factors set forth in *Becton, Dickinson* are as follows:

> (a) the similarities and material differences between the asserted art and the prior art involved during examination; (b) the cumulative nature of the asserted art and the prior art evaluated during examination; (c) the extent to which the asserted art was evaluated during examination, including whether the prior art was the basis for rejection; (d) the extent of the overlap between the arguments made during examination and the manner in which petitioner relies on the prior art; (e) whether petitioner has pointed out sufficiently how the examiner erred in its evaluation of the asserted prior art; and (f) the extent to which additional evidence and facts presented in the petition warrant reconsideration of the prior art or arguments.

Becton, Dickinson at 17–18.

Factors (a), (b), and (d) of the *Becton, Dickinson* factors relate to whether the art or arguments presented in the Petition are the same or substantially the same as those previously presented to the Office. *Advanced Bionics* at 10. Factors (c), (e), and (f) "relate to whether the petitioner has demonstrated a material error by the Office" in its prior consideration of that art or arguments. *Id.* Only if the same or substantially the same art or arguments were previously presented to the Office do we then consider whether petitioner has demonstrated a material error by the Office. *Id.* "At bottom, this framework reflects a commitment to defer to previous Office

evaluations of the evidence of record unless material error is shown." *Id.* at 9.

The Petition argues that we should not deny institution under § 325(d). Pet. 26–29. The Petition notes that Scherer was cited in an information disclosure statement during prosecution of U.S. Patent Application No. 14/928,980 ("the '980 application"), which issued as the '565 patent. *Id.* at 27. The Petition argues, however, that it presents Scherer in combination with Robichaux, which the Office did not consider during prosecution of the '980 application. *Id.* at 29. Petitioner asserts that the Petition demonstrates that

> Robichaux's system generates a demand torque, estimates an engine torque output, compares the demand torque to the estimated torque to determine the difference, and controls torque output through fuel quantity and spark timing adjustments based on the calculated difference. . . . Robichaux also estimates the torque output based on a current spark angle, a current air/fuel ratio, and an estimated air charge. . . . Scherer's transient torque control system uses a high-pass filter for its typical purpose, here, removing the low-frequency component of a torque signal and output the filtered signal to a torque controller. . . . And a [person of ordinary skill in the art] would have been motivated to combine Scherer's teachings with Robichaux's torque controller, providing the predictable result of precisely controlling engine torque output. . . . Accordingly, combining Robichaux and Scherer does not present the same or substantially similar prior art or arguments before the Office, so the Board should not deny institution under § 325(d).

Id.

Patent Owner argues that

> *Scherer* was already considered by the Examiner during prosecution of [the '980 application] and should thus not even be considered under the provisions of 35 U.S.C. § 325(d). All the other prior art references upon which Petitioner relies are merely

> cumulative with the admitted prior art, and thus, should also not be considered.

Prelim. Resp. 5. Patent Owner adds that

> The '565 patent discloses what was well known in the prior art, namely, that, "[i]n engine torque controllers for DISI engines, when the engine is operated in stratified mode, spark angle has little influence on the torque produced. . . . The torque producer modifies the air/fuel in order to control the torque produced. . . . Conversely, when the engine is operating in homogenous mode . . . [t]he torque producer modifies the timing of the spark ignition in order to control the torque produced." (Ex. 1001 at 1:36-45; (*Id.* at 23.)[).] This disclosure constitutes the "admitted prior art" of the '565 patent.

Id. at 11.

In response, Petitioner argues, among other things, that Robichaux is not cumulative of the admitted prior art. Petitioner explains that

> In addition to [admitted prior art] features, Robichaux discloses (1) a torque controller, Pet., 40–42; (2) a torque producer including an estimator, *id.*, 43–45; (3) a comparator, *id.*, 45–46; and (4) a transient torque controller, *id.*, 51–54. The Office never considered that a single prior art reference included these additional features. And failing to consider Robichaux was material error as the '565 patent claims are obvious in view of Robichaux and Scherer.

Pet. Reply 7–8.

Patent Owner does not respond to Petitioner's assertion that Robichaux teaches a number of things beyond the admitted prior art. *See generally* Sur-reply.

We begin our analysis by considering whether "the same or substantially the same prior art or arguments" were presented previously to the Office. To do so, we look to *Becton, Dickinson* factors (a), (b), and (d). *Advanced Bionics* at 10.

Considering *Becton, Dickinson* factors (a) and (b), we find the art primarily asserted by Petitioner materially differs from and is not cumulative to the art involved during examination of the ’980 patent. During examination of the ’980 application, Scherer was cited by the Applicant on an Information Disclosure Statement, and the Examiner indicated on the Information Disclosure Statement that Scherer was considered. *See* Ex. 1002, 42–44. Aside from this, the present record reflects that the art asserted by Petitioner bears little or no similarity to and is not cumulative of the art involved during examination. At this stage, Patent Owner does not dispute Petitioner’s assertion that Robichaux teaches “(1) a torque controller, Pet. 40–42; (2) a torque producer including an estimator, *id.*, 43–45; (3) a comparator, *id.*, 45–46; and (4) a transient torque controller, *id.*, 51–54.” Pet. Reply 7–8; *see generally* Sur-reply. Additionally, Patent Owner does not argue, and it is not readily apparent, that any of these disclosures of Robichaux are also taught by the admitted prior art. *See* Prelim. Resp. 11 (citing ’565 patent column 1, lines 36–45 as “constitut[ing] the ‘admitted prior art’ of the ’565 patent”); *see generally* Sur-reply. The admitted prior art discusses adjusting spark timing and fuel timing during stratified combustion and homogeneous combustion operation (Ex. 1001, 1:36–45), but it is not clear that it discusses any of the things listed by Petitioner as disclosed in Robichaux. For example, Patent Owner does not provide any persuasive evidence or explanation that the admitted prior art teaches an “estimator” or “comparator.” *See generally* Prelim. Resp.; Sur-reply. Nor does Patent Owner assert that Scherer teaches the claimed “estimator” or “comparator.” *See generally* Prelim. Resp.; Sur-reply.

Regarding *Becton, Dickinson* factor (d), there appears to be no overlap between the arguments presented by Petitioner and arguments made during examination. The ’980 application received a first-action allowance with no explanation of any reasons for allowance. Ex. 1002, 49–50.

For the above reasons, we determine that the same or substantially the same art or arguments were not previously presented to the Office, and we need not consider the second part of the *Advanced Bionics* framework. Accordingly, we decline to exercise our discretion under 35 U.S.C. § 325(d) to deny the Petition.

E. Alleged Obviousness of Claims 1 and 7 over Robichaux and Scherer

1. Overview of Robichaux

Robichaux relates to controlling engine torque. Ex. 1020 ¶ 1. Figure 1 of Robichaux is reproduced below.

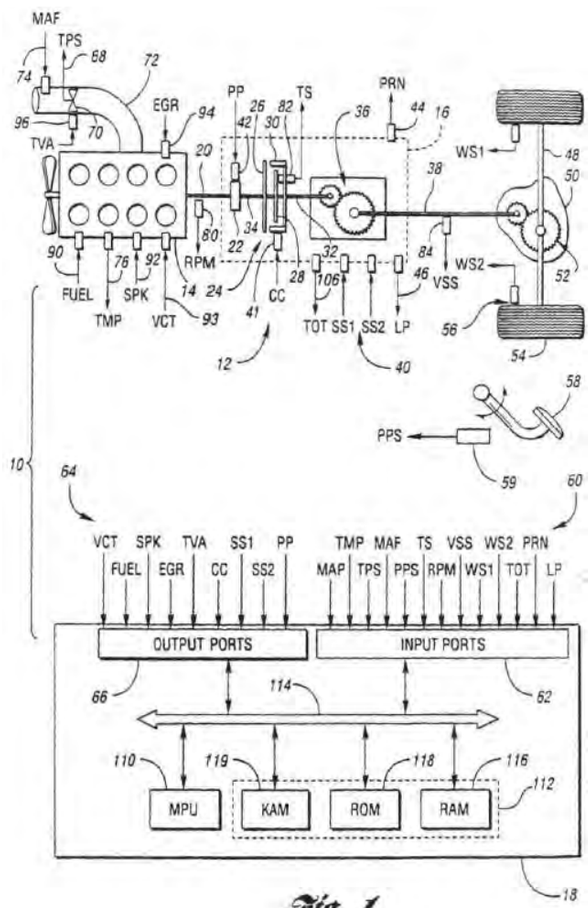

Fig. 1

Figure 1, "a block diagram illustrating a system and method for controlling engine torque," shows system 10, which includes vehicular powertrain 12. *Id.* ¶¶ 10, 12.

Powertrain 12 includes internal combustion engine 14 connected to automatic transmission 16. *Id.* ¶ 12. Transmission 16 includes output shaft 38, which connects to one or more axles 48 through final drive reduction or differential 50. *Id.* ¶¶ 13–14.

Powertrain 12 also includes controller 18 "in communication with engine 14 and transmission 16 for providing various information and control functions," as well as sensors 60 communicating with controller 18. *Id.*