1 people were attempting to do that, so, yes.
2 Q. This is a good point to take a break I
3 think. Can we go off the record?
4 (Recess from the record.)
5 BY MR. CONKLIN:
6 Q. Dr. Leonard, can you take a look at
7 paragraph 26 of Exhibit 2004 in IPR 2020-00444?
8 A. Yes. Go ahead.
9 Q. Suzuki discloses a torque control for a
10 direct injection spark ignition engine; correct?
11 A. Yes.
12 Q. And specifically Suzuki discloses a
13 method of torque control for a direct injection
14 spark ignition engine that operates in both
15 stratified and homogenous modes; correct?
16 A. Yes.
17 Q. And you agree that Suzuki provides a
18 simple solution to engine torque control; correct?
19 A. Yes. Simple in comparison to '565.
20 Q. And a POSA would have known how to
21 implement Suzuki's torque control system?
22 A. Following that teaching, yes.

1 Q. You would agree that Suzuki's controller
2 controls torque output using spark adjustments
3 during homogenous mode; right?
4 A. Correct.
5 Q. And Suzuki's torque controller controls
6 torque output using fuel adjustments during
7 stratified mode; correct?
8 A. Air/fuel ratio, correct.
9 (Leonard Deposition Exhibit 4 was marked
10 for identification and attached to the
11 transcript.)
12 BY MR. CONKLIN:
13 Q. Let's take a look at Figure 6 of the
14 Suzuki reference, Exhibit 1005 of IPR 2020-00444.
15 A. Which drawing are we looking at?
16 Q. Figure 6.
17 A. Okay. I'm there.
18 Q. Actually, before we get into Figure 6,
19 let's take a step back. Can you take a look at
20 Column 1, lines 4 through 6?
21 A. Column line -- or Column 1, lines 4
22 through 6?

Q. Yes.
A. Okay. I'm there.
Q. Suzuki is directed to a direct injection spark ignition engine control apparatus for correcting engine torque based on engine operating conditions; right?
A. Correct.
Q. And can you take a look at Column 1, lines 44 through 48?
A. Yes.
Q. Suzuki's system controls torque by controlling at least the spark timing to correct torque during homogenous combustion and by controlling at least the air/fuel ratio to correct torque during stratified combustion; correct?
A. Yes.
Q. Can we take a look at Column 4, lines 32 through 40?
A. Yes.
Q. Suzuki discloses using a control unit 20; correct?
A. Yes.

Q. And this control unit 20 controls the degree of opening of the electronic control throttle valve 4; correct?

A. Yes.

Q. And control unit 20 controls the amount of fuel injected to the engine by the fuel injector 5; correct?

A. Correct.

Q. And control unit 20 controls the spark timing of the spark plug 6; correct?

A. Yeah.

Q. A person of ordinary skill in the art would have known how to implement control unit 20; correct?

A. Yes.

Q. Let's turn to Figure 6 of Suzuki.

A. Okay.

Q. And for your reference, the corresponding description starts on Column 7, line 8.

A. Figure 6. Hold on a second. This is Suzuki 105. Say that column again.

Q. Column 7, lines -- starting at line 8.
A. Okay.
Q. At step S31 in Figure 6 of Suzuki, the controller reads a demand torque; right?
A. It says here that a target torque, TRQ, calculated by torque demand control is retrieved. It didn't sound exactly like what you were saying. I'm reading out of the reference Column 7, 14, 15.
Q. Let's look at box S31 in Figure 6.
A. Okay.
Q. In Figure 6, at step S31, the target torque correction demand is read; correct?
A. That's what it says there, yes.
Q. At step S33 in Figure 6 of Suzuki, the controller estimates a torque output; correct?
A. Torque output air correction, correct.
Q. What does box S33 say?
A. It says "Estimate output torque during air correction."
Q. So at step S33 the controller is estimating output torque?
A. Yes.

Q. At step S34 of Figure 6 of Suzuki, the controller calculates a torque shortage; correct?
A. Correct.
Q. And that calculation is target torque minus estimated torque; correct?
A. Yes.
Q. The resulting signal of target torque minus estimated torque is a difference signal; correct?
A. You could call it that.
Q. What is a difference signal?
A. I will say yes, I don't want to explain it. That's a difference signal, yes.
Q. Sorry, I had audio difficulties there, let me read that answer real quick.
Dr. Leonard, I apologize, I'm going to reask the question so I can hear your response.
What is a difference signal?
A. The difference between two items, two signals in this case.
Q. And the calculated torque shortage in S34, that is a difference signal; correct?

A. Yes.

Q. In step S35 in Figure 6 of Suzuki, the controller calculates a torque correction factor piper in accordance with the difference between the estimated torque and the target torque; correct?

A. Hold on. Say that question again.

Q. In step S35 in Figure 6 of Suzuki, the controller calculates a torque correction factor piper in accordance with the difference between the estimated torque and the target torque; correct?

A. S35 calculates the torque correction factor piper in accordance with the torque shortage.

Q. And the torque shortage is the difference between target torque and the estimated torque; correct?

A. Yes.

Q. In step S38 in Figure 6 of Suzuki, the controller calculates a spark timing correction factor TQRET based on the torque correction factor

1 during a homogenous mode; correct?
2 A. Correct.
3 Q. In step S40 in Figure 6 of Suzuki, the
4 controller -- strike that.
5 Dr. Leonard, referencing Column 7,
6 lines 65 through 67 of Suzuki.
7 A. Yes.
8 Q. Suzuki's engine controller proceeds to
9 make a fuel adjustment as shown in Figure 5 during
10 stratified mode; correct?
11 A. Say your question again.
12 Q. And I will revise it slightly.
13 Referencing lines 60 through 67 of Column 7,
14 Suzuki's controller proceeds to make a fuel
15 adjustment as shown in Figure 5 during the
16 stratified mode; correct?
17 A. Hold on a second because I've got
18 a -- I'm looking at a different spot now so let me
19 look at it.
20 (Witness peruses the exhibit.)
21 THE WITNESS: Given that I looked at all
22 this stuff now, go ahead with your revised

1 question again.
2 BY MR. CONKLIN:
3 Q. Referencing lines 60 through 67 of
4 Column 7, Suzuki's controller proceeds to make a
5 fuel adjustment as shown in Figure 5 during the
6 stratified mode; correct?
7 A. Yes.
8 Q. Dr. Leonard, please review the first
9 paragraph of Column 8.
10 A. Okay.
11 Q. Steps S31 to S37, S38, S39, S12 and S13,
12 perform a homogenous combustion torque correcting
13 function; correct?
14 A. Yes.
15 Q. Steps S31 to S37, S40 and S22 to S25
16 perform a stratified combustion torque correcting
17 function; correct?
18 A. Yes.
19 Q. Dr. Leonard, while we have been
20 referencing Exhibit 1005 of IPR 2020-00444, this
21 particular publication is the same publication as
22 Exhibit 1005 of IPR 2020-00445; right?

A. Say your question again, I'm -- I just found what you were talking about, part of it, what was the first part? Just go ahead and repeat it all.

Q. We've been discussing Exhibit 1005 of IPR 2020-00444, this particular document is the same document as Exhibit 1005 of IPR 2020-00445; right?

A. Yes.

(Leonard Deposition Exhibit 5 was marked for identification and attached to the transcript.)

BY MR. CONKLIN:

Q. Dr. Leonard, can you please grab Exhibit 1007 of IPR 2020-00444?

A. 1007.

Q. This is the Scherer reference, Dr. Leonard.

A. Oh, 1007. Okay. I have it.

Q. And Exhibit 1007 of IPR 2020-00445 is the same document as Exhibit 1007 of IPR 2020-00444; right?

A. Yes.
Q. I'll refer to this document as the Scherer reference.
Do you understand that?
A. Yes.
Q. Let's take a look at Figure 1 of Scherer.
A. Okay.
Q. Figure 1 of Scherer illustrates an upper control branch made of components 2 and 3; correct?
A. Yes.
Q. Figure 1 of Scherer illustrates a lower control branch made up of components --
(Technical interruption.)
Q. Let me start that over.
Figure 1 of Scherer illustrates a lower control branch made up of components 4, 5, 6, 7, 8, 9, 10, 11, 12 and 13; correct?
A. Correct.
Q. Let's discuss the upper control branch. Elements 2 and 3 collectively shown in the upper

branch adjust the throttle valve to control torque output; correct?

A. Say that again.

Q. Elements 2 and 3 of the upper control branch adjust the throttle valve to control torque output; correct?

A. Yes.

Q. Element 3 is a PID controller; correct?

A. Yes.

Q. The upper branch in Figure 1 of Scherer is directed to adjusting the steady state component of torque output; correct?

A. Say your question again because I've got an answer for you, I just want to make sure I'm answering you correctly.

Q. Certainly.

The upper branch in Figure 1 of Scherer is directed to adjusting the steady state component of torque output; correct?

A. What they say in the reference is that it's a quasi-static desired engine torque correction.

Q. So the upper branch in Figure 1 of Scherer is directed to adjusting the quasi-static component of the torque output; correct?

A. That's what I understand from the reference.

Q. Let's look at the lower branch in Figure 1 of Scherer. Elements 4 through 13 shown in the lower branch of the torque control device adjust the ignition displacement for auto engines and fuel timing -- strike that.

Elements 4 through 13 collectively shown in the lower branch of the torque control device adjust ignition displacement for auto engines; correct?

A. Hang on a second, I'm looking at the -- I'm looking at the wrong figure. Figure 1; correct?

Q. That's right.

A. And you're saying 4 through 13?

Q. Yes.

A. Yeah, that's the branch that adjusts ignition point according to the reference.

Q. And Element 4 is a high-pass filter; correct?

A. Yes, that's what they say in the reference.

Q. The lower branch shown in Figure 1 of Scherer is directed to adjusting the transient component of the torque output; right?

A. In the reference, they call it dynamic desired torque component.

Q. Is dynamic desired torque component analogous to a transient torque component?

A. Yes.

Q. Is it fair to say that the lower branch of Scherer constitutes a transient torque control?

A. I would classify it as a dynamic torque control by adjusting the ignition point branch. In a rough linkage, yes.

Q. Earlier you mentioned Element 4 as a high-pass filter; correct?

A. Yes.

Q. The high-pass filter 4 is on the input side of this ignition adjustment branch; correct?

A. Yes.

Q. And downstream of high-pass filter 4 would be the components that control the ignition adjustment; correct?

A. There's additional devices that modify the control further downstream. You're talking 6 through 13.

Q. What is signal ZS in Figure 1, next to Element 12?

A. It's an adjusting signal for the ignition point adjustment.

Q. And the high-pass filter 4 is upstream of this adjusting signal ZS; correct?

A. It's upstream of that output ZS.

Q. Let's turn to Figure 2 of Scherer.

A. Okay.

Q. Figure 2 of Scherer illustrates an upper control branch made of components 2 prime and 3 prime; correct?

A. Correct.

Q. Figure 2 of Scherer illustrates a lower control branch made of components 4 through 9;

1 correct?
2 A. 4 through 9 prime, correct.
3 Q. The lower control branch in Figure 2
4 includes a high-pass filter 4; correct?
5 A. Yes.
6 Q. And high-pass filter 4 is upstream of
7 the injection start adjusting signal EBS; correct?
8 A. Yes.
9 Q. And in Figure 2, the high-pass filter 4
10 is on the input side of the ignition adjustment
11 branch; correct?
12 A. Say again.
13 Q. The high-pass filter 4 is on the input
14 side of the lower ignition adjustment branch;
15 correct?
16 A. On which figure?
17 Q. Figure 2.
18 A. No. Incorrect.
19 Q. Why is -- why do you say high-pass
20 filter 4 is not on the input side of that lower
21 branch?
22 A. Which figure?

Q. Figure 2.
A. Figure 2.
Q. Sorry, I think I -- I'm misspeaking here, Dr. Leonard, leading to the confusion.
In Figure 2, high-pass filter 4 is on the input side of the fuel adjustment branch; correct?
A. EBS is an injection start adjusting signal for a compression ignition diesel engine so, no.
Q. High-pass filter 4 in Figure 2 of Scherer is on the input side of the lower control branch; correct?
A. Figure 2?
Q. Yes.
A. Yes.
Q. Dr. Leonard, please take a look at the paragraph starting on Column 1, line 7.
A. Column 1. All right. Line -- okay.
Q. Scherer is directed to processes and apparatuses for adjusting the torque of an engine; correct?

A. Torque of internal combustion engine, correct.

Q. Dr. Leonard, please take a look at line -- the paragraph starting at line 38 of Column 2.

A. 38. Yes.

Q. One advantage of Scherer's system was to provide a system that adjusts the engine torque to a desired value with the least possible expenditures in both steady state and transient engine operations with a comparatively short reaction time; correct?

A. That's what it says, correct.

Q. Referencing Figure 1 in the passage starting at line 20 of Column 4, Scherer's system reacts very rapidly to sudden changes of engine torque; correct?

A. Okay. So we are referencing Figure 1 and this is Column 4, line 20, go ahead and say your question.

Q. Scherer's lower ignition point adjustment branch reacts very rapidly to sudden

1 changes of the engine torque; correct?
2 A. Yes, that's what it says.
3 Q. And that would be an advantage of the
4 system?
5 A. That is one of the purported advantages.
6 Q. Is there any reason why that's not an
7 advantage?
8 A. No.
9 Q. Scherer's lower ignition point
10 adjustment branch in Figure 1 also minimizes
11 exhaust admission and fuel consumption; right?
12 A. Yes.
13 Q. The high-pass filter 4 in Figure 1
14 filters the dynamic desired engine torque part
15 from the desired engine torque supplied to it and
16 in turn provides the dynamic desired engine torque
17 to the device for the ignition point adjustment
18 which follows; correct?
19 A. Go ahead and say your question again.
20 Q. And I was referencing lines 40 through
21 45 of Column 4.
22 A. Thank you.

Q. The high-pass filter 4 in Figure 1 filters the dynamic desired engine torque part from the desired engine torque supplied to it and in turn provides the dynamic desired engine torque to the device for the ignition point adjustment which follows; correct?

A. Yes, that's what it says, yep.

Q. And due to the high-pass characteristic of the high-pass filter 4 in Figure 1 of Scherer, the dynamic desired torque component will completely disappear over time; correct?

A. Repeat your question again, I'm sorry.

Q. And due to the high-pass characteristic of the high-pass filter 4, the dynamic desired torque component will completely disappear over time; correct?

A. That's qualified at a constant engine load, yes, if you add that into it.

Q. Due to the high-pass characteristic of the high-pass filter stage, after the decay of the transients during a change of the engine torque desired and at a constant engine load, the dynamic

1 desired torque component will completely disappear
2 over time; correct?
3 A. After decay, which is time, correct.
4 Q. And this results and shows a return of
5 the engine operating condition to the optimal
6 range for both consumption and admission; correct?
7 A. That's what they claim, yes, or not
8 claim, but that's what they state.
9 Q. And that would be an advantage of
10 Scherer's system; correct?
11 A. That's what they're claiming or
12 purporting as an advantage, yes.
13 Q. Is there any reason why that would not
14 be an advantage?
15 A. No, there isn't any reason why it would
16 not be an advantage.
17 Q. In Figure 1 of Scherer, the adjusting
18 signal ZS is for ignition point adjustment;
19 correct?
20 A. This question sounds familiar. The
21 output signal of the adder 12 is used as an
22 adjusting signal ZS for the ignition point

adjustment. That's Column 5, line 5, 6.

Q. Is that a "yes," the adjusting signal ZS is for ignition point adjustment?

A. Yes.

Q. I'm referencing line 9 of Column 5. The embodiment of Figure 1 permits a comparatively rapid engine torque adjustment which can follow very fast desired engine torque changes and after the conclusion of a transient phase, changes back to comparatively rapidly to an operation which is optimal with respect to the exhaust admissions and fuel consumption; right?

A. Yes.

Q. And this would be an advantage of Scherer's system?

A. Yes.

Q. Figure 2 of Scherer shows a system that is functionally analogous to Figure 1; correct?

A. Yes.

Q. I think this is a good point to take a break. Can we go off the record?

(Recess from the record.)

(Leonard Deposition Exhibit 6 was marked for identification and attached to the transcript.)

BY MR. CONKLIN:

Q. Dr. Leonard, can you please take a look at Exhibit 1020 of IPR 2020-00445, that is the Robichaux reference.

A. Okay.

Q. Robichaux is directed to a system and method for controlling engine torque; correct?

A. Yes.

Q. Now, Dr. Leonard, can you please turn to Figure 3 of Robichaux?

A. Okay.

Q. Do you see Element 210 in the upper left-hand corner of that figure?

A. Yes.

Q. Element 210 is a comparator; correct?

A. Okay. Say question again.

Q. Element 210 in Figure 3 of Robichaux, that is a comparator; correct?

A. Yes.

Q. And comparator 210 outputs a signal TQ_ERR; correct?
A. Yes.
Q. Signal TQ_ERR is a difference signal; correct?
A. Yes.
Q. Element 220 is a controller; correct?
A. A PID controller.
Q. Is that, yes, Element 220 is a controller?
A. It is a PID controller, Element 220.
Q. What is a PID controller?
A. Proportional integral derivative.
Q. The difference signal TQ_ERR is an input to controller 220; correct?
A. A PID controller 220, correct.
Q. Moving upstream from comparator 210, do you see the input signal TQ_ENG?
A. No. Where are you looking at that?
Q. In the far left of --
A. Oh, your faces were covering it up. TQ_ENG.

Q. Signal TQ_ENG is a demand brake torque signal; correct?

A. Desired engine brake torque is what it says in this specification.

Q. So input signal TQ_ENG is a desired engine brake torque; correct?

A. Correct.

Q. Turning to Element 216 in Figure 3.

A. Okay.

Q. Block 216 in Figure 3 estimates the actual engine brake torque; correct?

A. That's what it says.

Q. In paragraph 30 of Robichaux, it mentions Block 218. Is Block 218 Block 210 in Figure 3?

A. I think we're looking at two different things here. Where are you looking, what page?

Q. In paragraph 30 of Robichaux, it mentions Block 218.

A. On page 5?

Q. Is the reference to Block 218 in paragraph 30 --

A. So I'm on page 5 and then there's paragraph 30.

Q. Correct.

A. Go ahead. And what was your question?

Q. In paragraph 30 of Robichaux, it mentions Block 218, is the reference Block 218 in paragraph 30 the same as the illustrated Block 210 in Figure 3?

A. Block 218, is that in Figure 3 that you're asking about?

Q. Yes.

The comparator 210 --

A. Okay.

Q. -- in Figure 3.

A. Yes.

Q. Is the description in paragraph 30 referencing Block 218 a typo to comparator 210?

MS. WILLIAMS: Objection; form.

BY MR. CONKLIN:

Q. Strike that.

In paragraph 30 of Robichaux, Block 218 outputs an actual -- strike that.

1 Block 218 of Robichaux outputs a TQ
2 error signal based on a difference between TQ sum
3 and TQ net; correct?
4 A. Which block again?
5 Q. Referencing Block 218 in paragraph 30.
6 A. Where does that reference in the figure,
7 though, I don't see that?
8 Q. I'm asking you about paragraph 30 right
9 now.
10 A. Okay.
11 Q. Does Block 218 in paragraph 30 output a
12 TQ error based on a difference between TQ sum and
13 TQ net?
14 A. It appears that that's what's written in
15 the specification.
16 Q. Turning to Figure 3 and comparator 210.
17 Comparator 210 outputs a TQ_ERR signal based on a
18 difference between TQ sum and TQ net; correct?
19 A. If you're talking about Figure 3 -- and
20 this is in reference to Block 210; correct --
21 Q. Yes.
22 A. -- in Figure 3?

1 Q. Yes.
2 A. Go ahead and repeat that again because
3 this 218 through 10 thing is weird, it's
4 confusing.
5 Q. Comparator 210 outputs a TQ error signal
6 that is a difference between TQ sum and TQ net;
7 correct?
8 A. It's TQ_ERR. There is a -- so, yeah,
9 TQ_ERR, yes, as long as that's their output of
10 Block 210.
11 THE REMOTE TECHNICIAN: Counsel, I
12 believe we just lost someone, I'm not sure if they
13 were scheduled to drop out of the meeting.
14 MR. CONKLIN: Let's go off the record.
15 (Recess from the record.)
16 BY MR. CONKLIN:
17 Q. Dr. Leonard, what -- in Figure 3 of
18 Robichaux, what is Block 202?
19 A. Block 202 I don't see a definition, but
20 it does say it controls at least one operating
21 parameter of the engine based on requested engine
22 brake torque to deliver the desired engine brake

torque. They just call it Block 202.

Q. So Block 202 controls the engine torque?

A. It delivers desired engine brake torque.

Q. Block 202 is downstream of comparator 210 in Figure 3; correct?

A. Yes.

Q. Block 202 is downstream of controller 220 in Figure 3; correct?

A. PID controller, yes, 220.

Q. Turning to paragraph 35 of Robichaux.

A. On page 5?

Q. Yes.

A. Okay.

Q. Take a second to review that paragraph.

(Witness peruses the exhibit.)

BY MR. CONKLIN:

Q. In addition to controlling airflow, Block 202 can be configured to control fuel delivery or fuel flow to control the engine output torque; correct?

A. Say your question again, I finally read the paragraph.

Q. In addition to controlling airflow, Block 202 can be configured to control fuel delivery or fuel flow to control the engine output torque; correct?

A. No -- wait a minute, hang on.

Q. Dr. Leonard, please read lines 38 and 39.

A. In the embodiment illustrated in Figure 3, Section 202 uses airflow as the primary control parameter. Of course fuel delivery or fuel flow may also be controlled to control the engine output torque.

Q. In addition to controlling airflow, Robichaux discloses that fuel delivery or fuel flow can also be controlled to adjust engine torque; correct?

A. He says that in that paragraph, I don't see it in the Section 202, but, you know, yeah, you are correct, he says that in that paragraph you're referencing, but there's so many errors in this reference, I just don't trust it.

Q. What other errors are there,

1 Dr. Leonard?
2 A. Well, there's the errors and I don't
3 know what exactly they were trying to say with the
4 Block 218 and then the TQ_ERR, which also shows up
5 maybe possibly as TQ_ERROR, I'm not really sure.
6 It makes it a little confusing there. And so --
7 Q. Dr. Leonard, what is integrator windup?
8 A. Where are you referring to?
9 Q. Earlier you mentioned that Dr. MacCarley
10 had a declaration that you reviewed; correct?
11 A. Okay.
12 Q. And he references integrator windup,
13 what is your understanding of integrator windup?
14 A. Was that the first declaration or --
15 Q. Let me strike. I'll provide some
16 context there.
17 A. Please.
18 Q. What is your understanding of integrator
19 windup in relation to PID controllers?
20 A. Well, PID controller, the I stands for
21 integral.
22 Q. And what is integrator windup?

A. So that's a situation in a PID, feedback controller where you got a large change in set point and the integral term accumulates a significant error during that rise and it overshoots. It kind of goes back to that thing about the hunting that we talked about earlier, you know, you overshoot.

Q. Is hunting the same as integrator windup?

A. It's analogous in -- it's analogous.

Q. Have you designed a PID controller before?

A. No.

Q. Have you designed controllers before?

A. Yes.

Q. Would a person of ordinary skill in the art understand how to program a controller?

A. Yes.

Q. Would it have been routine at the time of the '565 patent to know how to program a controller?

A. Yes.

Q. In your declaration, did you cite any secondary references to support your opinion?

A. On 444 or 445?

Q. We'll take them individually. In your second declaration, Exhibit 2005, of IPR 2020-00444, did you cite any secondary textbooks or articles to support your opinion?

A. On -- this is -- this is document 2004, I thought you said 2005; but, anyway, no, I did not.

Q. And to clarify the record, Exhibit 2004 is your second declaration in the IPR 2020-00444?

A. That's correct.

Q. Why didn't you cite any additional secondary textbooks or articles to support your opinion?

A. Because I didn't need to. I didn't feel like I needed to.

Q. In your second declaration in IPR 2020-00445, did you cite any secondary textbooks or articles to support your opinion?

A. That is also document 2004; correct?

Q. Yes.
A. No.
Q. Let's go back to Exhibit 1005, Suzuki reference.
A. Okay.
Q. And will you specifically look at Column 8, lines 51 through 58?
A. Column 8, 51 through 58?
Q. Correct.
A. Okay.
Q. Figure 13 shows the response waveforms associated when the air conditioner is turned on; right?
A. Yes.
Q. And earlier you mentioned turning the air conditioner on is an example of a transient condition; correct?
A. Yeah, when it comes on and when it goes off.
Q. And that would create a stepped input; correct?
A. It would create a stepped need for

1 increased torque. So it would be a step -- the
2 torque would actually be lowered sort of, you
3 know, shorted, be less than what you had because
4 it's being absorbed by that accessory.
5 Q. In Suzuki, the spark timing is corrected
6 to correct torque shortage during homogenous mode;
7 correct?
8 A. Spark timing is corrected to correct the
9 torque shortage during homogenous combustion.
10 Q. Is that a "yes," spark timing is
11 corrected to correct torque shortage during
12 homogenous combustion?
13 A. Yes.
14 Q. Dr. Leonard, can you turn back to
15 Exhibit 1007, the Scherer reference?
16 A. All right.
17 Q. Please review Column 3, lines 59 through
18 62.
19 A. Yes.
20 Q. Scherer describes that the desired
21 engine torque signal MDES outputted from the
22 torque coordination unit 1 is merely an example;

1 right?
2 A. Say that again.
3 Q. Let me try to clarify that.
4 A. Hold on a second, I got to close a door
5 here to eliminate some background noise.
6 Go ahead.
7 Q. Scherer discloses that one example of a
8 signal indicative of the desired torque -- strike
9 that.
10 Do you see in line 62 the phrase, "for
11 example"?
12 A. Okay. Yes.
13 Q. What does for example mean to you?
14 A. It's an example.
15 Q. Does that mean there are other
16 possibilities?
17 A. I mean, that calls for speculation, but,
18 you know, they're saying for example, so that's
19 the example given.
20 Q. But it's not limiting it to the desired
21 engine torque MDES in this instance?
22 A. You know, I'm looking at this and it

1 says, "On the input side, an engine torque
2 coordination unit 1 provides a signal indicative,
3 for example, of desired engine torque M sub DES
4 requested by the driver via the accelerator
5 pedal." You know, if there's another embodiment,
6 can you direct me to that where --
7 Q. I'm just trying to get your
8 understanding of what this sentence means.
9 A. What it means is that the engine torque
10 coordination unit 1 provides a signal indicative
11 of the desired engine torque M sub DES requested
12 by the driver via the accelerator pedal.
13 Q. Let's go off the record.
14 (Recess from the record.)
15 BY MR. CONKLIN:
16 Q. Dr. Leonard, I have no further
17 questions.
18 A. Okay.
19 MS. WILLIAMS: Kyle, give me about
20 five minutes to see if I want to redirect.
21 MR. CONKLIN: Okay.
22 MS. WILLIAMS: All right.

(Recess from the record.)

MS. WILLIAMS: Patent owner has no questions on redirect. We're good to go.

MR. CONKLIN: Thank you, Dr. Leonard, for your time today.

THE WITNESS: You're welcome. Thank you.

MR. CONKLIN: Off the record.

MS. WILLIAMS: Off the record.

(Off the record at 1:15 p.m.)

1 CERTIFICATE OF SHORTHAND REPORTER - NOTARY PUBLIC
2 I, Matthew Goldstein, Reporter and Notary Public
3 within and for the state of Maryland do hereby
4 certify:
5 That RUSSELL LEONARD, Ph.D., the witness whose
6 deposition is hereinbefore set forth, was duly sworn
7 by me before the commencement of such deposition and
8 that such deposition was taken before me and is a
9 true record of the testimony given by such witness.
10 I further certify that the adverse party,
11 VOLKSWAGEN GROUP OF AMERICA, INC, was represented
12 by counsel at the deposition.
13 I further certify that the deposition of RUSSELL
14 LEONARD, Ph.D. occurred virtually on Tuesday,
15 January 5, 2021, commencing at 9:31 a.m. to 1:15
16 p.m.
17 I further certify that I am not related to any of
18 the parties to this action by blood or marriage, I
19 am not employed by or an attorney to any of the
20 parties to this action, and that I am in no way
21 interested, financially or otherwise, in the outcome
22 of this matter.

IN WITNESS WHEREOF, I have hereunto set my hand this 15th of January, 2021.

Matthew Goldstein

A
a2 4:20
about 7:4, 8:7, 14:14, 15:9, 19:18, 42:2, 58:10, 59:8, 59:19, 64:6, 69:19
absorbed 67:4
abstract 23:12, 23:15
accelerator 69:4, 69:12
accessory 30:6, 30:15, 67:4
accordance 39:4, 39:10, 39:14
according 45:22
accordingly 32:9
accumulates 64:3
accurate 31:8
acknowledge 5:4, 5:15
action 71:18, 71:20
actual 57:11, 58:22
actually 23:2, 34:18, 67:2
add 31:4, 52:18
adder 53:21
addition 16:12, 61:17, 62:1, 62:13
additional 14:11, 14:17, 14:21, 15:2, 47:5, 65:14
adjust 32:8, 44:1, 44:5, 45:9, 45:13, 62:15
adjusting 44:11, 44:18, 45:2, 46:6, 46:16, 47:10, 47:13, 48:7, 49:8, 49:21, 53:17, 53:22, 54:2
adjustment 28:4, 28:9, 40:9, 40:15, 41:5, 46:22, 47:4, 47:11, 48:10, 48:14, 49:6, 50:22, 51:10, 51:17, 52:5, 53:18, 54:1, 54:3, 54:7
adjustments 34:2, 34:6
adjusts 45:21, 50:8
admissibility 5:6
admission 51:11, 53:6
admissions 54:11
adult 18:6
advantage 50:7, 51:3, 51:7, 53:9, 53:12, 53:14, 53:16, 54:14
advantages 51:5
adverse 71:10
after 52:20, 53:3, 54:8
again 16:21, 19:4, 27:7, 28:6, 31:9, 32:2, 36:22, 39:7, 40:11, 41:1, 42:1, 44:3, 44:13, 48:12, 51:19, 52:12, 55:19, 59:4, 60:2, 61:21, 68:2
agree 33:17, 34:1
agrees 5:11, 5:13
ahead 15:19, 33:8, 40:22, 42:3, 50:19, 51:19, 58:4, 60:2, 68:6
air 19:12, 20:2, 21:4, 30:3, 30:13, 31:15, 32:12, 34:8, 35:14, 37:16, 37:19, 66:12, 66:16
air-conditioning 30:14, 30:21, 31:2, 32:6
aircraft 18:8, 18:13
airflow 61:17, 62:1, 62:9, 62:13
all 11:1, 12:21, 15:13, 15:14, 40:21, 42:4, 49:19, 67:16, 69:22
allegedly 26:22
allows 20:11, 21:1, 21:6, 29:17
along 32:22
also 3:17, 5:13, 8:17, 18:4, 22:1, 24:19, 51:10, 62:11, 62:15, 63:4, 65:22
america 1:5, 71:11
amount 31:11, 36:5
analogous 46:11, 54:18, 64:10
annotations 7:13
another 69:5
answer 19:18, 38:15, 44:14
answering 44:15
answers 6:17
any 6:22, 11:20, 12:1, 12:4, 14:11, 26:18, 51:6, 53:13, 53:15, 65:1, 65:6, 65:14, 65:20, 71:17, 71:19
anyway 65:9
apologize 10:9, 38:16
apparatus 35:4
apparatuses 49:21
appeal 1:3
appears 59:14

application
4:19
approximately
15:14
art
15:21, 16:15, 26:19, 26:22, 30:3, 32:19, 32:20, 36:12, 64:17
arthur
4:11
articles
65:7, 65:15, 65:21
articulated
14:18
ashby
3:18
aside
11:22
asked
10:17, 21:22
asking
19:18, 58:10, 59:8
associated
66:12
attached
4:6, 9:10, 22:15, 23:4, 34:10, 42:11, 55:2
attempting
33:1
attorney
71:19
audio
38:14
auto
45:9, 45:13
automotive
13:10, 18:2, 18:3, 18:17, 18:18, 18:19
available
18:3, 30:22
avenue
3:5, 3:13

B

bachelor
17:21
back
9:3, 11:14, 15:4, 16:8, 20:5, 30:13, 31:10, 34:19, 54:9, 64:5, 66:3, 67:14
background
15:13, 20:6, 22:2, 68:5
bad
31:12
based
5:7, 21:10, 35:5, 39:22, 59:2, 59:12, 59:17, 60:21
because
9:16, 31:1, 40:17, 44:13, 60:2, 65:17, 67:3
been
6:5, 16:7, 41:19, 42:5, 64:19
before
1:3, 2:9, 7:5, 19:16, 19:20, 20:2, 25:7, 25:9, 25:12, 25:16, 25:18, 25:22, 27:5, 27:9, 27:13, 27:17, 27:22, 28:5, 28:10, 28:13, 34:18, 64:12, 64:14, 71:7, 71:8
behalf
3:2, 3:10
being
18:12, 18:16, 30:15, 31:1, 32:4, 67:4
believe
60:12
belt
30:16
best
9:5
between
9:4, 38:19, 39:4, 39:10, 39:17, 59:2, 59:12, 59:18, 60:6
bit
10:7
block
57:10, 57:14, 57:19, 57:21, 58:6, 58:7, 58:9, 58:17, 58:21, 59:1, 59:4, 59:5, 59:11, 59:20, 60:10, 60:18, 60:19, 61:1, 61:2, 61:4, 61:7, 61:18, 62:2, 63:4
blocks
20:12, 21:5, 29:16
blood
71:18
board
1:3, 12:16
bosch
13:10
both
8:21, 9:7, 32:14, 33:14, 50:10, 53:6
box
37:9, 37:17
brake
57:1, 57:3, 57:6, 57:11, 60:22, 61:3
branch
43:10, 43:14, 43:18, 43:21, 44:1, 44:5, 44:10, 44:17, 45:1, 45:6, 45:8, 45:12, 45:21, 46:5, 46:13, 46:16, 46:22, 47:18, 47:22, 48:3, 48:11, 48:14, 48:21, 49:6, 49:13, 50:22, 51:10
break
7:4, 33:2, 54:21
breaks
7:3

C

cadillac
18:22
calculated
37:6, 38:21
calculates
38:2, 39:3, 39:9, 39:13, 39:21
calculation
38:4
call
38:10, 46:8, 61:1
called
9:16, 12:11, 12:12, 12:13
calls
68:17
came
15:22, 16:11, 32:22
can't
27:3
case
1:11, 21:2, 38:20
certainly
19:22, 44:16

certificate
71:1
certify
71:4, 71:10, 71:13, 71:17
change
12:2, 16:14, 31:21, 52:21, 64:2
changes
11:20, 50:16, 51:1, 54:8, 54:9
changing
31:4
characteristic
52:8, 52:13, 52:19
characterized
20:21
chase
9:15
cite
65:1, 65:6, 65:14, 65:20
claim
24:4, 24:7, 24:10, 24:19, 24:22, 25:3, 53:7, 53:8
claiming
53:11
clarify
65:11, 68:3
class
18:3, 19:5
classify
46:15
clean
7:11
close
12:21, 68:4
collectively
43:22, 45:11
college
18:16
column
34:20, 34:21, 35:8, 35:17, 36:19, 36:22, 37:1, 37:8, 40:5, 40:13, 41:4, 41:9, 49:18, 49:19, 50:5, 50:15, 50:19, 51:21, 54:1, 54:5, 66:7, 66:8, 67:17
combination
26:20
combustion
19:13, 24:2, 29:21, 35:13, 35:15, 41:12, 41:16, 50:1, 67:9, 67:12
comes
32:14, 32:15, 66:18
comfortable
9:3
coming
10:10
commencement
71:7
commencing
71:15
communication
7:20
company
18:9, 19:5
comparatively
50:11, 54:6, 54:10
comparator
21:6, 24:19, 26:14, 26:21, 29:8, 29:17, 55:18, 55:21, 56:1, 56:17, 58:12, 58:17, 59:16, 59:17, 60:5, 61:4
comparators
25:15, 27:15, 27:20
compared
27:15, 27:20
compares
26:14
comparison
33:19
completely
52:11, 52:15, 53:1
component
44:12, 44:19, 45:3, 46:7, 46:9, 46:10, 46:11, 52:10, 52:15, 53:1
components
28:13, 43:10, 43:14, 43:18, 47:3, 47:18, 47:22
compression
49:9
compressor
30:3, 30:14, 30:21, 31:2, 31:16, 32:6, 32:12
conclusion
54:9
condition
31:17, 53:5, 66:17
conditioner
30:3, 31:16, 32:12, 66:12, 66:16
conditions
35:6
conducted
1:16, 2:2
conference
6:13
configured
61:18, 62:2
confusing
60:4, 63:6
confusion
49:4
conklin
3:3, 4:4, 5:10, 6:2, 9:12, 22:17, 23:6, 23:21, 33:5, 34:12, 41:2, 42:13, 55:4, 58:19, 60:14, 60:16, 61:16, 69:15, 69:21, 70:4, 70:8
considered
31:19, 32:16
considering
32:11
constant
52:17, 52:22
constitutes
46:14
consumption
51:11, 53:6, 54:12
context
29:1, 63:16
control
19:3, 19:11, 19:12, 19:20, 19:22, 20:1, 21:15, 25:15, 33:9, 33:13, 33:18, 33:21, 35:4, 35:20, 36:1, 36:2, 36:5, 36:9, 36:13, 37:6, 43:10, 43:14, 43:18, 43:21, 44:1, 44:4, 44:5, 45:8, 45:12, 46:14, 46:16, 47:3, 47:6, 47:18, 47:22, 48:3, 49:12, 61:18, 61:19, 62:2, 62:3, 62:10, 62:11
controlled
62:11, 62:15

controller
21:8, 24:1, 24:8, 25:4, 29:19, 34:1, 34:5, 37:4, 37:15, 37:20, 38:2, 39:3, 39:9, 39:21, 40:4, 40:8, 40:14, 41:4, 44:8, 56:7, 56:8, 56:10, 56:11, 56:12, 56:15, 56:16, 61:7, 61:9, 63:20, 64:2, 64:11, 64:17, 64:21
controllers
25:6, 25:21, 27:4, 27:8, 28:2, 28:7, 63:19, 64:14
controlling
19:13, 35:12, 35:14, 55:10, 61:17, 62:1, 62:13
controls
18:10, 19:5, 34:2, 34:5, 35:11, 36:1, 36:5, 36:9, 60:20, 61:2
coordination
67:22, 69:2, 69:10
copies
7:8, 7:11, 7:14
copy
9:13, 9:21, 10:12, 11:4
corner
55:16
corrected
67:5, 67:8, 67:11
correcting
35:5, 41:12, 41:16
correction
37:12, 37:16, 37:19, 39:3, 39:9, 39:13, 39:21, 39:22, 44:22
correctly
44:15
corresponding
36:19
could
20:20, 21:2, 31:13, 32:16, 32:21, 38:10
counsel
5:1, 5:5, 5:10, 5:12, 5:14, 5:22, 6:1, 7:21, 11:16, 16:1, 16:3, 60:11, 71:12
counteract
30:7
couple
13:3
course
62:10
courses
18:20
court
5:1, 5:14, 5:19, 5:21
cover
8:21
covered
12:21
covering
56:21
create
66:20, 66:22
cullen
12:12
current
29:10
curve
22:4, 22:11, 22:12
customer
31:14
cut
9:15
cycles
31:18, 31:20
cycling
32:12

D

dealing
19:11
decay
22:12, 52:20, 53:3
decision
13:4
declaration
4:9, 4:11, 8:17, 9:18, 9:22, 10:2, 10:5, 10:14, 11:4, 11:6, 11:13, 12:9, 12:17, 12:22, 13:11, 13:14, 13:17, 13:20, 13:22, 14:6, 14:16, 14:19, 15:4, 15:9, 15:18, 16:17, 21:3, 28:21, 29:2, 63:10, 63:14, 65:1, 65:5, 65:12, 65:19
declarations
8:7, 8:14, 11:8, 11:11, 11:21, 12:5, 12:7, 13:3, 15:12
deficit
30:22
definition
16:4, 60:19
degree
18:11, 18:16, 36:2
degrees
17:20, 20:6
delaware
3:14
deliver
60:22
delivers
61:3
delivery
61:19, 62:3, 62:10, 62:14
delved
19:6
demand
24:8, 25:6, 27:4, 27:5, 27:8, 27:9, 27:13, 27:21, 29:2, 29:10, 29:12, 29:13, 37:4, 37:6, 37:12, 57:1
demanded
27:16
depending
31:12
deposed
6:5
deposition
1:15, 2:1, 4:7, 6:9, 8:4, 8:20, 9:9, 12:18, 22:14, 23:3, 34:9, 42:10, 55:1, 71:6, 71:7, 71:8, 71:12, 71:13
depositions
8:22
derivative
56:13
des
69:3, 69:11
describes
67:20
description
36:19, 58:16

design
18:6
designed
21:14, 31:13, 64:11, 64:14
desired
26:13, 27:2, 44:21, 46:9, 46:10, 50:9, 51:14, 51:15, 51:16, 52:2, 52:3, 52:4, 52:10, 52:14, 52:22, 53:1, 54:8, 57:3, 57:5, 60:22, 61:3, 67:20, 68:8, 68:20, 69:3, 69:11
device
45:8, 45:12, 51:17, 52:5
devices
47:5
devlin
3:12
diagnostic
19:2
diesel
49:9
difference
26:4, 26:5, 26:10, 26:11, 26:13, 26:15, 27:2, 27:17, 27:22, 38:8, 38:11, 38:13, 38:18, 38:19, 38:22, 39:4, 39:10, 39:17, 56:4, 56:14, 59:2, 59:12, 59:18, 60:6
differences
21:5, 21:7, 29:17, 29:18
different
13:6, 16:13, 40:18, 57:16
difficulties
38:14
direct
33:10, 33:13, 35:3, 69:6
directed
23:22, 35:3, 44:11, 44:18, 45:2, 46:6, 49:20, 55:9
disappear
52:11, 52:15, 53:1
discloses
26:18, 33:9, 33:12, 35:20, 62:14, 68:7
discuss
43:21
discussing
42:5
displacement
45:9, 45:13
dispute
26:2, 26:7
division
18:22
doctor
18:14
document
12:15, 16:10, 16:16, 22:22, 42:6, 42:7, 42:21, 43:2, 65:8, 65:22
documents
7:9, 10:9, 10:10, 11:9, 12:8, 13:1
doing
10:20, 30:8, 30:9
done
30:7
door
68:4
down
30:19
downstream
47:2, 47:6, 61:4, 61:7
dr
4:9, 5:9, 6:3, 7:19, 8:3, 9:13, 10:9, 17:2, 17:20, 20:9, 21:14, 21:18, 22:18, 23:7, 28:16, 30:10, 33:6, 38:16, 40:5, 41:8, 41:19, 42:14, 42:18, 49:4, 49:17, 50:3, 55:5, 55:12, 60:17, 62:6, 63:1, 63:7, 63:9, 67:14, 69:16, 70:4
drawing
34:15
drive
30:6, 30:15
driven
30:15
driver
69:4, 69:12
drop
60:13
drops
30:18, 30:20
due
52:8, 52:13, 52:19
duly
71:6
duplicative
15:16
duration
32:17
during
18:4, 30:4, 34:3, 34:6, 35:13, 35:15, 37:18, 40:1, 40:9, 40:15, 41:5, 52:21, 64:4, 67:6, 67:9, 67:11
dynamic
46:8, 46:10, 46:15, 51:14, 51:16, 52:2, 52:4, 52:10, 52:14, 52:22

E

each
6:12, 15:15
earlier
13:5, 46:18, 63:9, 64:6, 66:15
earned
18:14, 18:15
ebs
48:7, 49:8
edits
11:16, 11:19
education
17:22, 18:2, 18:5, 18:6, 20:7
educational
18:15, 20:6
either
11:21, 13:11, 13:14
electrical
17:8, 17:11, 17:17
electronic
19:3, 36:2
element
44:8, 46:1, 46:18, 47:9, 55:15, 55:18, 55:20, 56:7, 56:9, 56:11, 57:8
elements
43:22, 44:4, 45:7, 45:11
eliminate
68:5

embodiment
54:6, 62:8, 69:5
employed
71:19
end
18:11, 31:9
engages
30:4
engaging
30:14
engine
19:14, 21:15, 23:22, 25:15, 26:13, 27:2, 29:21, 30:4, 30:6, 30:8, 30:15, 30:16, 30:19, 31:5, 31:11, 33:10, 33:14, 33:18, 35:4, 35:5, 36:6, 40:8, 44:21, 49:9, 49:21, 50:1, 50:8, 50:11, 50:16, 51:1, 51:14, 51:15, 51:16, 52:2, 52:3, 52:4, 52:17, 52:21, 52:22, 53:5, 54:7, 54:8, 55:10, 57:3, 57:6, 57:11, 60:21, 60:22, 61:2, 61:3, 61:19, 62:3, 62:12, 62:15, 67:21, 68:21, 69:1, 69:3, 69:9, 69:11
engineer
18:7, 18:12, 18:22, 22:2
engineering
17:3, 17:6, 17:9, 17:12, 17:15, 17:18, 18:1, 18:17, 18:19
engineers
18:10
engines
24:2, 45:9, 45:13
enough
22:7
entire
11:13
ep
4:19
equipment
18:18
error
28:17, 28:22, 29:8, 29:9, 29:11, 29:16, 29:20, 32:1, 59:2, 59:12, 60:5, 64:4
errors
12:4, 62:20, 62:22, 63:2
esquire
3:3, 3:11
estimate
29:10, 37:18
estimated
24:16, 26:14, 27:2, 27:16, 27:21, 38:5, 38:8, 39:5, 39:11, 39:17
estimates
37:15, 57:10
estimating
37:21
estimator
24:14, 24:16
estimators
25:12
european
4:19
even
16:9
ever
21:14, 21:18
everhart
3:18
every
7:4, 18:2
evolved
16:1
exactly
11:18, 20:10, 37:7, 63:3
examination
4:2, 6:1
example
30:2, 30:13, 66:16, 67:22, 68:7, 68:11, 68:13, 68:14, 68:18, 68:19, 69:3
exhaust
51:11, 54:11
exhibit
4:7, 4:9, 4:11, 4:16, 4:17, 4:18, 4:19, 9:9, 9:14, 9:21, 10:12, 10:18, 11:3, 14:3, 22:14, 22:19, 23:3, 23:8, 23:19, 33:7, 34:9, 34:14, 40:20, 41:20, 41:22, 42:5, 42:7, 42:10, 42:15, 42:20, 42:21, 55:1, 55:6, 61:15, 65:5, 65:11, 66:3, 67:15
expenditures
50:10
explain
15:2, 22:3, 38:12
explanation
32:11

F

faces
56:21
fact
5:8
factor
39:3, 39:9, 39:14, 39:22
factual
12:1
failed
26:3, 26:8
fair
26:2, 26:7, 46:13
familiar
53:20
far
56:20
fast
54:8
feedback
29:6, 29:7, 64:1
feedforward
29:3, 29:6
feel
9:3, 65:17
few
6:5, 13:8
figure
34:13, 34:16, 34:18, 36:16, 36:21, 37:3, 37:9, 37:11, 37:14, 38:1, 39:2, 39:8, 39:20, 40:3, 40:9, 40:15, 41:5, 43:6, 43:9, 43:13, 43:17, 44:10, 44:17, 45:1, 45:7, 45:16, 46:5, 47:8, 47:15, 47:17, 47:21, 48:3,

48:9, 48:16, 48:17, 48:22, 49:1, 49:2, 49:5, 49:11, 49:14, 50:14, 50:18, 51:10, 51:13, 52:1, 52:9, 53:17, 54:6, 54:17, 54:18, 55:13, 55:16, 55:20, 57:8, 57:10, 57:15, 58:8, 58:9, 58:14, 59:6, 59:16, 59:19, 59:22, 60:17, 61:5, 61:8, 62:9, 66:11
filter
20:9, 20:10, 21:1, 21:4, 21:10, 21:16, 21:19, 22:4, 25:1, 26:4, 26:9, 26:16, 26:21, 28:3, 28:8, 28:12, 29:15, 31:22, 32:2, 32:3, 32:8, 32:21, 46:1, 46:19, 46:21, 47:2, 47:12, 48:4, 48:6, 48:9, 48:13, 48:20, 49:5, 49:11, 51:13, 52:1, 52:9, 52:14, 52:20
filtered
26:5, 26:10, 26:12, 26:15, 27:1
filters
21:5, 25:18, 28:12, 29:16, 51:14, 52:2
finally
61:21
financially
71:21
find
9:17
finessing
16:13
finished
18:10
finishing
18:11
firm
3:12
first
14:2, 23:15, 41:8, 42:3, 63:14
five
69:20
flight
9:4
flow
61:19, 62:3, 62:11, 62:15
focus
18:2
follow
54:7
following
33:22
follows
51:18, 52:6
ford
18:9, 19:5
form
22:9, 58:18
formally
5:2
forms
21:19
forth
9:4, 11:14, 31:10, 71:6
found
26:18, 42:2
fox
3:4
frequencies
32:3, 32:5
frequency
20:19, 21:11, 21:12, 28:13
fuel
19:12, 20:2, 28:4, 28:9, 34:6, 34:8, 35:14, 36:6, 40:9, 40:14, 41:5, 45:10, 49:6, 51:11, 54:12, 61:18, 61:19, 62:2, 62:3, 62:10, 62:11, 62:14
function
41:13, 41:17
functionally
54:18
further
24:22, 47:6, 69:16, 71:10, 71:13, 71:17
future
10:11

G

gave
19:19, 30:2
general
19:1, 20:12, 29:19
generally
6:8, 9:16, 22:6, 26:12
generate
27:16, 27:21
generated
29:9
generates
29:8
generating
27:5, 27:9
gilpin
3:13
give
11:1, 69:19
given
40:21, 68:19, 71:9
go
15:19, 16:8, 20:11, 22:21, 31:10, 32:8, 33:3, 33:8, 40:22, 42:3, 50:19, 51:19, 54:21, 58:4, 60:2, 60:14, 66:3, 68:6, 69:13, 70:3
goes
32:15, 64:5, 66:18
going
6:21, 9:1, 10:7, 10:10, 10:11, 14:20, 20:5, 29:15, 30:5, 30:13, 38:16
goldstein
1:22, 2:9, 3:4, 71:2, 72:15
good
6:3, 6:4, 31:3, 33:2, 54:20, 70:3
grab
9:13, 42:14
greater
29:13
group
1:5, 71:11

H

hand
72:2
handbook
13:11
hang
45:15, 62:5
hard
27:19
hear
27:19, 38:17

heavy
18:18
held
18:21
help
9:17, 10:11
here
8:4, 8:6, 8:10, 10:8, 12:3, 14:18, 15:5, 15:6, 15:7, 19:7, 37:5, 49:4, 57:17, 68:5
hereby
5:15, 71:3
hereinbefore
71:6
hereunto
72:1
heywood
13:13
high
20:11, 20:13, 20:14, 20:21, 22:7
high-pass
20:9, 20:10, 21:1, 21:4, 21:10, 21:15, 21:19, 22:4, 24:22, 25:18, 26:3, 26:9, 26:16, 26:21, 28:3, 28:8, 28:12, 29:15, 31:22, 32:2, 32:8, 32:20, 46:1, 46:19, 46:21, 47:2, 47:12, 48:4, 48:6, 48:9, 48:13, 48:19, 49:5, 49:11, 51:13, 52:1, 52:8, 52:9, 52:13, 52:14, 52:19, 52:20
higher
18:15, 20:15, 20:22, 32:5
hold
36:21, 39:7, 40:17, 68:4
homogenous
33:15, 34:3, 35:13, 40:1, 41:12, 67:6, 67:9, 67:12
hopefully
9:1
hour
7:4
hours
15:14
hughes
18:8, 18:13
hunting
30:11, 30:12, 31:10, 64:6, 64:8

I

identification
9:10, 22:15, 23:4, 34:10, 42:11, 55:2
ignition
24:1, 33:10, 33:14, 35:4, 45:9, 45:13, 45:22, 46:16, 46:22, 47:3, 47:11, 48:10, 48:14, 49:9, 50:21, 51:9, 51:17, 52:5, 53:18, 53:22, 54:3
ignore
27:3
illustrated
58:7, 62:8
illustrates
43:9, 43:13, 43:17, 47:17, 47:21
implement
33:21, 36:13
important
6:11, 6:16
inc
1:5, 71:11
include
14:15
includes
24:13, 29:11, 48:4
including
15:13
incorrect
48:18
increased
67:1
indicative
68:8, 69:2, 69:10
individually
65:4
industrial
18:1
information
12:1, 21:22
initially
18:8
injected
36:6
injection
33:10, 33:13, 35:3, 48:7, 49:8
injector
36:7
input
16:3, 22:5, 22:6, 26:4, 26:10, 46:21, 48:10, 48:13, 48:20, 49:6, 49:12, 56:14, 56:18, 57:5, 66:20, 69:1
instance
68:21
instances
29:11, 29:13
instead
5:3
institute
13:4
institution
12:16
instruct
18:18
integral
56:13, 63:21, 64:3
integrator
63:7, 63:12, 63:13, 63:18, 63:22, 64:8
inter
4:13, 12:14
interested
71:21
interface
7:20
interfaced
19:3
internal
19:13, 24:1, 29:20, 50:1
interruption
43:15
introduce
10:21
ipr
1:11, 8:8, 8:14, 8:18, 9:14, 9:19, 10:13, 11:3, 12:10, 13:1, 14:1, 15:18, 22:19, 23:8, 28:21, 33:7, 34:14, 41:20, 41:22, 42:6, 42:7, 42:15, 42:20, 42:21, 55:6, 65:5, 65:12, 65:19
issue
32:13
items
38:19

J
january 1:17, 71:15, 72:2
job 1:20
jurgen 13:16

K
kessler 3:4
kicks 30:21, 31:16, 32:6, 32:9
kind 9:2, 13:4, 30:1, 64:5
know 7:1, 7:5, 9:2, 13:4, 15:5, 62:18, 63:3, 64:7, 64:20, 67:3, 68:18, 68:22, 69:5
known 19:16, 19:20, 19:22, 20:2, 25:6, 25:9, 25:12, 25:18, 25:22, 27:5, 27:9, 27:13, 27:17, 27:22, 28:4, 28:9, 28:13, 33:20, 36:13
kyle 3:3, 69:19

L
large 64:2
larger 21:6, 29:18
last 10:4, 30:10
later 18:8
law 3:12
lawyers 14:15
leadership 18:15
leading 49:4
least 35:12, 35:14, 50:9, 60:20
leaving 30:16
left 56:20
left-hand 55:16
leonard 1:15, 2:1, 4:2, 4:7, 4:10, 5:9, 6:3, 7:19, 8:3, 9:9, 9:13, 10:9, 17:2, 17:20, 20:9, 21:14, 21:18, 22:14, 22:18, 23:3, 23:7, 28:16, 30:10, 33:6, 34:9, 38:16, 40:5, 41:8, 41:19, 42:10, 42:14, 42:18, 49:4, 49:17, 50:3, 55:1, 55:5, 55:12, 60:17, 62:6, 63:1, 63:7, 67:14, 69:16, 70:4, 71:5, 71:14
less 15:15, 29:12, 30:7, 30:17, 30:22, 32:10, 67:3
let's 13:22, 24:4, 30:20, 34:13, 34:19, 36:16, 37:9, 43:6, 43:21, 45:6, 47:15, 60:14, 66:3, 69:13
level 15:21, 16:15
lieu 5:2
limiting 68:20
line 34:21, 36:20, 37:1, 49:18, 49:19, 50:4, 50:15, 50:19, 54:1, 54:5, 68:10
linear 16:18
lines 34:20, 34:21, 35:9, 35:17, 37:1, 40:6, 40:13, 41:3, 51:20, 62:6, 66:7, 67:17
linkage 46:17
list 10:10
little 10:7, 15:15, 29:21, 31:9, 63:6
llc 1:8, 3:12
load 52:18, 52:22
long 15:11, 22:7, 60:9
look 14:5, 22:10, 22:11, 23:12, 24:4, 33:6, 34:13, 34:19, 35:8, 35:17, 37:9, 40:19, 43:6, 45:6, 49:17, 50:3, 55:5, 66:6
looked 40:21
looking 34:15, 40:18, 45:15, 45:16, 56:19, 57:16, 57:17, 68:22
looks 22:4
lost 60:12
lot 19:6
low 20:12, 20:15, 20:18, 20:19, 20:20, 20:21, 28:13
lower 32:3, 43:13, 43:17, 45:6, 45:8, 45:12, 46:5, 46:13, 47:21, 48:3, 48:14, 48:20, 49:12, 50:21, 51:9
lowered 67:2

M
maccarley 4:12, 12:17, 13:3, 63:9
made 11:17, 43:10, 43:14, 43:18, 47:18, 47:22
magnitude 21:11, 21:12
major 17:22
make 11:21, 28:18,

40:9, 40:14, 41:4, 44:14
makes 63:6
manner 32:21
many 62:20
marked 9:9, 22:14, 23:3, 34:9, 42:10, 55:1
marriage 71:18
maryland 2:11, 71:3
master's 17:5, 17:11, 18:5
matter 19:7, 71:22
matthew 1:22, 2:9, 71:2, 72:15
maybe 15:15, 16:5, 20:18, 20:19, 63:5
mdes 67:21, 68:21
mean 21:13, 68:13, 68:15, 68:17
means 69:8, 69:9
mechanic 18:4
mechanical 17:3, 17:5, 17:14
meeting 60:13
mention 28:21
mentioned 16:16, 19:16, 30:11, 46:18, 63:9, 66:15
mentions 57:14, 57:19, 58:6
merely 67:22
method 33:13, 55:10
michigan 1:8
microprocessor 19:6, 19:9
minimizes 51:10
minor 13:9
minus 38:5, 38:8
minute 11:1, 62:5
minutes 69:20
missing 26:21, 26:22
misspeaking 49:3
mmt 7:21, 11:16, 16:1, 16:3
mmt's 14:14
mode 34:3, 34:7, 40:1, 40:10, 40:16, 41:6, 67:6
modes 33:15
modifications 20:2
modify 47:5
modules 19:4
moment 7:22, 23:18
more 16:20, 28:18, 32:7
morning 6:3, 6:4, 10:6
motivating 30:19
motor 1:8, 18:9, 19:5
motorcar 18:22
motors 19:1
moving 56:17
much 31:4, 31:6
multiple 16:17
must 30:8

N

necessarily 16:19
need 7:4, 32:7, 32:9, 65:17, 66:22
needed 65:18
net 59:3, 59:13, 59:18, 60:6
new 3:5
next 47:8
noise 68:5
notary 2:10, 71:1, 71:2
notes 7:13, 7:15
nothing 30:7
notice 2:9
noticeable 31:13
numerous 6:21, 18:21
nw 3:5

O

oath 7:17
object 5:6
objection 58:18
objectionable 31:14
obvious 26:9
obviously 9:6
obviousness 14:9, 14:12, 14:22, 15:5
occurred 71:14
office 1:1
oh 10:19, 42:19, 56:21
okay 5:20, 14:4, 22:20, 22:21, 23:11, 23:20, 34:17, 35:2, 36:17, 37:2, 37:10, 41:10, 42:19, 43:8, 47:16, 49:19, 50:18, 55:8, 55:14, 55:19, 57:9, 58:13, 59:10, 61:13, 63:11, 66:5, 66:10, 68:12, 69:18, 69:21
one 9:1, 9:16, 10:15, 11:22, 13:6, 14:2,

15:15, 15:22, 16:5, 16:11, 30:2, 50:7, 51:5, 60:20, 68:7
only 16:5, 21:6, 26:2, 26:7, 27:1, 29:17
open 22:20, 23:11
opening 36:2
operates 33:14
operating 35:5, 53:5, 60:20
operation 29:20, 30:4, 31:5, 54:10
operations 19:1, 26:17, 30:17, 50:11
opine 14:20
opinion 11:10, 31:15, 65:2, 65:7, 65:16, 65:21
optimal 53:5, 54:11
order 26:16
ordinary 15:21, 16:15, 32:18, 32:19, 36:12, 64:16
original 11:15
other 6:12, 7:19, 13:8, 14:12, 22:1, 30:8, 30:17, 62:22, 68:15
otherwise 71:21
out 21:5, 28:12, 29:16, 32:3, 37:8, 60:13
outcome 71:21
output 28:9, 30:18, 34:2, 34:6, 37:15, 37:16, 37:18, 37:21, 44:2, 44:6, 44:12, 44:19, 45:3, 46:7, 47:14, 53:21, 59:11, 60:9, 61:19, 62:3, 62:12
outputs 24:16, 26:5, 26:10, 28:4, 56:1, 58:22, 59:1, 59:17, 60:5
outputted 22:9, 67:21
over 6:12, 16:21, 22:12, 43:16, 52:11, 52:15, 53:2
overshoot 31:4, 31:6, 64:7
overshoots 64:5
own 8:5
owner 1:9, 3:10, 5:12, 70:2
owner's 12:19, 12:20

P

page 4:2, 4:7, 22:21, 23:15, 57:17, 57:20, 58:1, 61:11
pages 1:21
paper 7:8, 7:11
paragraph 15:17, 16:15, 19:17, 28:20, 30:11, 33:7, 41:9, 49:18, 50:4, 57:13, 57:18, 57:22, 58:2, 58:5, 58:7, 58:16, 58:21, 59:5, 59:8, 59:11, 61:10, 61:14, 61:22, 62:17, 62:19
paragraphs 14:5, 14:13, 15:8
parameter 60:21, 62:10
parameters 31:5
part 42:2, 42:3, 51:14, 52:2
partes 4:14, 12:14
particular 13:6, 41:21, 42:6
parties 71:18, 71:20
party 71:10
pass 21:7, 22:7, 29:18
passage 50:14
patent 1:1, 1:3, 1:9, 1:12, 3:10, 4:14, 4:16, 4:17, 4:18, 4:19, 5:12, 8:11, 12:10, 12:19, 12:20, 19:8, 19:10, 19:16, 19:21, 20:3, 21:3, 21:9, 23:9, 23:16, 23:22, 24:5, 24:7, 25:7, 25:10, 25:13, 25:16, 25:19, 25:22, 26:18, 27:6, 27:10, 27:13, 27:17, 27:22, 28:5, 28:10, 28:14, 29:1, 31:9, 32:22, 64:20, 70:2
pedal 69:5, 69:12
penalties 5:5, 5:16
people 33:1
percent 16:6
perform 41:12, 41:16
periodic 7:3
perjury 5:5, 5:17
permits 54:6
person 32:18, 32:19, 36:12, 64:16
peruses 23:19, 40:20, 61:15
petition 4:13, 12:14, 26:3, 26:8
petitioner 1:6, 3:2, 5:10, 6:1

petitioner's
12:18
ph
1:15, 2:1, 4:2, 4:12, 17:14, 17:17, 71:5, 71:14
phase
54:9
philosophy
18:14
phrase
68:10
pid
44:8, 56:8, 56:11, 56:12, 56:16, 61:9, 63:19, 63:20, 64:1, 64:11
piper
39:4, 39:10, 39:14
please
5:1, 7:1, 7:5, 23:7, 23:13, 23:16, 26:6, 41:8, 42:14, 49:17, 50:3, 55:5, 55:12, 62:6, 63:17, 67:17
pllc
3:4
plug
36:10
point
16:22, 33:2, 45:22, 46:16, 47:11, 50:21, 51:9, 51:17, 52:5, 53:18, 53:22, 54:3, 54:20, 64:3
posa
33:20
positions
18:21
possibilities
68:16
possible
50:9
possibly
63:5
powertrain
18:9, 19:4
preliminary
12:19
prepare
11:8, 15:11
prepared
12:9, 13:17, 13:20
preparing
12:7, 12:22, 13:11, 13:14
present
3:17
previously
10:17
primary
62:9
prime
47:18, 47:19, 48:2
prior
26:19, 26:22
proceeding
5:7, 10:13
proceedings
8:8, 8:21, 9:7
proceeds
40:8, 40:14, 41:4
process
6:8, 16:18, 16:19
processes
49:20
produced
29:5, 29:12, 29:14
producer
24:10, 24:13
producers
25:9, 27:12
produces
30:16
professor
18:16
program
64:17, 64:20
proportional
56:13
provide
6:17, 8:10, 16:3, 50:8, 63:15
provided
8:8, 8:14, 8:17, 15:20
provides
33:17, 51:16, 52:4, 69:2, 69:10
public
2:10, 71:1, 71:2
publication
41:21
pull
22:18, 23:7
purported
51:5
purporting
53:12
pursuant
2:9
put
14:19

Q

qualified
52:17
quasi-static
44:21, 45:2
question
20:5, 23:2, 26:6, 27:18, 28:18, 38:17, 39:7, 40:11, 41:1, 42:1, 44:13, 50:20, 51:19, 52:12, 53:20, 55:19, 58:4, 61:21
questions
6:22, 69:17, 70:3
quick
38:15
quite
31:13

R

radically
16:14
ran
15:22
range
53:6
rapid
54:7
rapidly
50:16, 50:22, 54:10
ratio
34:8, 35:14
reaction
50:12
reacts
50:16, 50:22
read
16:20, 23:18, 30:2, 37:12, 38:15, 61:21, 62:6
reading
15:13, 29:4, 37:8
reads
37:4
ready
5:22
real
12:1, 38:15
really
63:5
reask
38:17
reason
51:6, 53:13, 53:15
recall
11:16, 16:8,

16:10
receive
27:12, 28:3, 28:8
receives
21:4, 26:4, 26:9, 29:15
recess
33:4, 54:22, 60:15, 69:14, 70:1
recited
26:20
recites
24:7, 24:10, 24:19, 24:22, 25:3
record
10:22, 33:3, 33:4, 54:21, 54:22, 60:14, 60:15, 65:11, 69:13, 69:14, 70:1, 70:8, 70:9, 70:10, 71:9
recordkeeping
10:8
redirect
69:20, 70:3
reduce
31:7
refer
15:4, 43:2
reference
12:11, 12:12, 12:13, 15:7, 21:8, 21:13, 34:14, 36:18, 37:8, 42:17, 43:3, 44:20, 45:5, 45:22, 46:4, 46:8, 55:7, 57:21, 58:6, 59:6, 59:20, 62:21, 66:4, 67:15
references
9:7, 13:6, 13:7, 13:9, 15:16, 63:12, 65:2
referencing
15:8, 40:5, 40:13, 41:3, 41:20, 50:14, 50:18, 51:20, 54:5, 58:17, 59:5, 62:20
referring
29:2, 63:8
reflect
16:20
regarding
8:11
related
19:7, 19:10, 71:17
relation
19:12, 63:19
remember
13:2, 16:12
remote
3:18, 60:11
render
26:8
repeat
26:6, 27:18, 42:3, 52:12, 60:2
repetitive
9:8
reply
12:19
reported
1:22
reporter
5:1, 5:3, 5:14, 5:19, 5:21, 71:1, 71:2
represented
71:11
represents
29:3, 29:5
requested
60:21, 69:4, 69:11
requires
30:5
respect
54:11
respond
32:5
responded
32:4
response
12:19, 12:20, 21:19, 22:3, 31:7, 38:17, 66:11
resulting
38:7
results
53:4
retrieved
37:6
return
53:4
review
4:14, 11:10, 11:14, 12:8, 12:14, 13:1, 13:10, 13:13, 13:16, 13:19, 22:1, 41:8, 61:14, 67:17
reviewed
10:4, 11:9, 12:10, 12:11, 12:13, 12:15, 12:16, 21:20, 22:2, 63:10
reviewing
13:3
revise
40:12
revised
40:22
ribbens
13:19
right
7:17, 8:4, 10:8, 11:1, 14:20, 15:6, 15:7, 24:8, 24:11, 25:4, 25:7, 25:10, 25:13, 25:16, 25:19, 25:22, 29:4, 31:10, 34:3, 35:6, 37:4, 41:22, 42:8, 42:22, 45:18, 46:7, 49:19, 51:11, 54:12, 59:8, 66:13, 67:16, 68:1, 69:22
rise
64:4
road
30:20
robichaux
13:7, 55:7, 55:9, 55:13, 55:20, 57:13, 57:18, 58:5, 58:21, 59:1, 60:18, 61:10, 62:14
robyn
3:11
rough
46:17
roughly
15:16
routine
64:19
rpr
1:22, 2:10
run
10:8, 29:7, 30:5, 31:11
russell
1:15, 2:1, 4:2, 4:10, 5:9, 71:5, 71:13

S

said
13:5, 21:12, 65:9
same
41:21, 42:7,

42:21, 58:7, 64:8
satisfied 16:22
saved 16:9
say 20:13, 21:3, 21:13, 26:2, 26:7, 26:12, 27:7, 28:6, 30:20, 36:22, 37:17, 38:12, 39:7, 40:11, 42:1, 44:3, 44:13, 44:20, 46:3, 46:13, 48:12, 48:19, 50:19, 51:19, 55:19, 60:20, 61:21, 63:3, 68:2
saying 37:7, 45:19, 68:18
says 20:11, 37:5, 37:13, 37:18, 50:13, 51:2, 52:7, 57:4, 57:12, 62:17, 62:19, 69:1
scan 19:2
scheduled 60:13
scherer 12:13, 13:7, 42:17, 43:3, 43:7, 43:9, 43:13, 43:17, 44:10, 44:17, 45:2, 45:7, 46:6, 46:14, 47:15, 47:17, 47:21, 49:12, 49:20, 52:9, 53:17, 54:17, 67:15, 67:20, 68:7
scherer's 50:7, 50:15, 50:21, 51:9, 53:10, 54:15
school 18:17
science 17:21
second 4:9, 9:18, 10:13, 15:9, 15:15, 15:18, 28:20, 36:21, 40:17, 45:15, 61:14, 65:5, 65:12, 65:19, 68:4
secondary 17:22, 65:2, 65:6, 65:15, 65:20
section 62:9, 62:18
see 29:4, 55:15, 56:18, 59:7, 60:19, 62:18, 68:10, 69:20
sent 7:9
sentence 30:10, 69:8
separate 8:8, 9:2
sequencing 26:17
service 18:19, 19:1
set 64:2, 71:6, 72:1
short 50:11
shortage 38:2, 38:21, 39:15, 39:16, 67:6, 67:9, 67:11
shorted 67:3
shorthand 71:1
show 26:3, 26:8, 32:7
shown 40:9, 40:15, 41:5, 43:22, 45:7, 45:11, 46:5
shows 53:4, 54:17, 63:4, 66:11
side 46:22, 48:10, 48:14, 48:20, 49:6, 49:12, 69:1
sign 10:2
signal 20:14, 20:15, 20:16, 20:18, 20:20, 20:21, 21:4, 24:17, 26:5, 26:10, 26:11, 26:13, 27:5, 27:9, 27:13, 27:17, 27:22, 28:3, 28:4, 28:8, 29:2, 29:3, 29:5, 29:6, 29:8, 29:9, 29:11, 29:16, 38:7, 38:8, 38:11, 38:13, 38:18, 38:22, 47:8, 47:10, 47:13, 48:7, 49:9, 53:18, 53:21, 53:22, 54:2, 56:1, 56:4, 56:14, 56:18, 57:1, 57:2, 57:5, 59:2, 59:17, 60:5, 67:21, 68:8, 69:2, 69:10
signals 20:11, 20:12, 20:13, 26:14, 27:3, 28:9, 29:7, 38:20
signature-p1kal 72:13
signed 11:6
significant 64:4
similar 13:2, 13:5, 13:7
simple 33:18, 33:19
since 15:15
sir 5:15, 5:19
sitting 12:3
situation 30:17, 64:1
skill 15:21, 16:15, 32:18, 32:20, 36:12, 64:16
slate 13:2
slightly 40:12
smaller 21:5, 29:16
software 6:13, 19:2
solution 33:18
some 9:2, 9:6, 11:14, 11:19, 13:6, 13:7,

15:16, 16:20, 31:1, 31:4, 63:15, 68:5
somehow 9:3
someone 60:12
something 20:20, 20:22
somewhere 15:14
sorry 38:14, 49:3, 52:12
sort 16:19, 67:2
sound 37:7
sounds 53:20
spark 19:12, 20:1, 24:1, 28:4, 28:9, 33:10, 33:14, 34:2, 35:4, 35:12, 36:9, 36:10, 39:21, 67:5, 67:8, 67:10
speak 6:12
speaking 5:18
specific 28:19
specifically 8:10, 33:12, 66:6
specification 57:4, 59:15
speculation 68:17
spot 40:18
stage 52:20
stands 63:20
start 43:16, 48:7, 49:8
starting 37:1, 49:18, 50:4, 50:15
starts 36:19
state 2:10, 28:16, 28:22, 29:20, 32:1, 32:13, 32:16, 44:11, 44:18, 50:10, 53:8, 71:3
statement 15:5
statements 8:7
states 1:1, 4:16, 4:17, 4:18
stays 32:16
steady 28:16, 28:21, 28:22, 29:19, 32:1, 32:13, 32:16, 44:11, 44:18, 50:10
step 22:5, 22:6, 34:19, 37:3, 37:11, 37:14, 37:20, 38:1, 39:2, 39:8, 39:20, 40:3, 67:1
stepped 16:19, 66:20, 66:22
steps 41:11, 41:15
sterne 3:4
stipulate 5:2
stipulation 5:11, 5:13
strategies 19:9, 19:15
strategy 19:6
stratified 33:15, 34:7, 35:15, 40:10, 40:16, 41:6, 41:16
strike 23:2, 40:4, 45:10, 58:20, 58:22, 63:15, 68:8
structural 18:6
studied 21:18
stuff 40:22
sub 69:3, 69:11
subject 19:7
subtracting 29:9
sudden 50:16, 50:22
suite 3:6
sum 59:2, 59:12, 59:18, 60:6
supplied 51:15, 52:3
support 4:13, 65:2, 65:7, 65:15, 65:21
sure 27:19, 44:14, 60:12, 63:5
suzuki 12:11, 13:8, 33:9, 33:12, 33:17, 34:14, 35:3, 35:20, 36:16, 36:22, 37:3, 37:14, 38:1, 39:2, 39:8, 39:20, 40:3, 40:6, 66:3, 67:5
suzuki's 33:21, 34:1, 34:5, 35:11, 40:8, 40:14, 41:4
swearing 5:2
swing 31:12
switching 9:3
sworn 71:6
system 21:15, 31:3, 31:8, 31:12, 33:21, 35:11, 50:7, 50:8, 50:15, 51:4, 53:10, 54:15, 54:17, 55:9
systems 18:6, 18:7, 18:12, 25:16

T

takahashi 12:13, 13:8
take 7:3, 7:4, 15:11, 23:12, 23:18, 24:4, 33:2, 33:6, 34:13, 34:19, 35:8, 35:17, 43:6, 49:17, 50:3, 54:20, 55:5, 61:14, 65:4
taken 71:8
talked 14:14, 64:6

talking
15:9, 42:2, 47:6, 59:19
target
37:5, 37:11, 38:4, 38:7, 39:5, 39:11, 39:17
taught
19:4
teaching
18:9, 33:22
technical
43:15
technician
3:18, 60:11
technologies
1:8
technology
18:1, 18:17, 18:19
tell
9:15
term
64:3
terms
29:20
testify
8:7
testimony
5:4, 5:16, 8:11, 71:9
textbook
13:13, 13:16, 13:19
textbooks
22:1, 65:6, 65:15, 65:20
th
72:2
thank
5:14, 5:21, 51:22, 70:4, 70:6
thing
60:3, 64:5
things
13:4, 19:7, 30:8, 31:19, 32:3, 57:17
think
12:20, 33:3, 49:3, 54:20, 57:16
thought
8:22, 65:9
thoughts
11:15
throttle
36:3, 44:1, 44:5
through
10:8, 16:9, 18:1, 20:11, 21:1, 21:7, 22:8, 26:15, 29:7, 29:18, 30:6, 32:8, 34:20, 34:22, 35:9, 35:18, 40:6, 40:13, 41:3, 45:7, 45:11, 45:19, 47:7, 47:22, 48:2, 51:20, 60:3, 66:7, 66:8, 67:17
time
10:4, 18:3, 18:7, 21:19, 22:3, 22:12, 30:9, 50:12, 52:11, 52:16, 53:2, 53:3, 64:19, 70:5
times
6:5
timing
35:12, 36:10, 39:21, 45:10, 67:5, 67:8, 67:10
today
6:11, 6:22, 12:3, 70:5
told
11:9
took
18:2
tool
19:2
toward
18:11
tq
59:1, 59:2, 59:3, 59:12, 59:13, 59:18, 60:5, 60:6
tq_eng
56:18, 56:22, 57:1, 57:5
tq_err
56:2, 56:4, 56:14, 59:17, 60:8, 60:9, 63:4
tq_error
63:5
tqret
39:22
trademark
1:1
transcribed
6:18
transcript
5:6, 9:11, 12:18, 22:16, 23:5, 34:11, 42:12, 55:3
transient
21:7, 25:3, 25:21, 28:2, 28:7, 29:19, 31:17, 31:19, 32:15, 46:6, 46:11, 46:14, 50:10, 54:9, 66:16
transients
29:22, 30:1, 52:21
transitioned
18:12
trial
1:3
trq
37:5
true
5:4, 5:16, 8:9, 71:9
trust
62:21
truthful
11:10
try
6:12, 7:3, 31:7, 68:3
trying
63:3, 69:7
tuesday
1:17, 71:14
turn
13:22, 15:17, 36:16, 47:15, 51:16, 52:4, 55:12, 67:14
turned
66:12
turning
57:8, 59:16, 61:10, 66:15
two
8:7, 8:8, 8:14, 8:22, 9:4, 12:7, 14:12, 15:12, 26:15, 29:7, 38:19, 57:16
type
11:11
typed
11:13, 11:15
typo
11:22, 58:17

U

unclear
7:1
under
5:5, 5:16, 7:16, 32:19
undergrad
18:4
understand
6:8, 6:14, 6:16, 6:19, 7:6,

7:16, 8:3, 8:6, 8:9, 8:20, 9:6, 43:4, 45:4, 64:17
understanding 8:5, 14:8, 14:18, 14:22, 15:3, 15:20, 63:13, 63:18, 69:8
understandings 14:12
understood 32:20
unique 26:17
unit 35:21, 36:1, 36:5, 36:9, 36:13, 67:22, 69:2, 69:10
united 1:1, 4:16, 4:17, 4:18
until 16:22, 32:9, 32:22
upper 43:9, 43:21, 43:22, 44:4, 44:10, 44:17, 45:1, 47:17, 55:15
upstream 47:12, 47:14, 48:6, 56:17
use 16:13, 30:5, 30:19
uses 21:15, 62:9
using 20:1, 22:4, 30:16, 34:2, 34:6, 35:20

V

value 50:9
valve 36:3, 44:1, 44:5
various 19:3
vehicle 30:19
verbal 6:17
verified 5:8
version 12:15
versions 16:10, 16:16, 16:17
via 69:4, 69:12
video 6:12
virtually 1:16, 2:2, 71:14
volkswagen 1:5, 71:11
voltage 20:19

W

wait 62:5
want 27:19, 38:12, 44:14, 69:20
washington 3:7
wave 21:19, 22:9
waveforms 66:11
way 5:7, 20:17, 71:20
we'll 65:4
we're 57:16, 70:3
we've 14:14, 42:5
weird 60:3
welcome 70:6
whatever 20:19
whenever 5:22
whereof 72:1
williams 3:11, 5:12, 58:18, 69:19, 69:22, 70:2, 70:9
wilmington 3:14
windup 63:7, 63:12, 63:13, 63:19, 63:22, 64:9
within 71:3
witness 5:3, 5:8, 5:18, 5:20, 23:19, 23:20, 40:20, 40:21, 61:15, 70:6, 71:5, 71:9, 72:1
word 16:5, 16:7, 16:11, 16:13
worked 18:4
working 18:7, 18:9
worthy 32:4
write 16:18, 16:20, 16:21
written 59:14
wrong 45:16
wrote 11:10, 14:10, 19:1

Y

yeah 9:8, 10:15, 36:11, 45:21, 60:8, 62:18, 66:18
yep 52:7
york 3:5

Z

zoom 7:20
zs 47:8, 47:13, 47:14, 53:18, 53:22, 54:2

.

.2600 3:8
.9010 3:15

0

00444 8:15, 9:14, 10:17, 12:10, 14:1, 15:18, 22:19, 23:8, 28:21, 33:7, 34:14, 41:20, 42:6, 42:15, 42:22, 65:6, 65:12
00445 1:11, 8:18, 10:13, 11:3, 13:1, 41:22, 42:7, 42:20, 55:6, 65:20
076 4:20

1

1 1:21, 45:16,

54:18, 70:10, 71:15
10
43:19, 60:3
1001
23:8
1003
22:19
1005
34:14, 41:20, 41:22, 42:5, 42:7, 66:3
1007
42:15, 42:16, 42:19, 42:20, 42:21, 67:15
1020
55:6
105
36:22
11
43:19
1100
3:5
12
18:1, 41:11, 43:19, 47:9, 53:21
13
41:11, 43:19, 45:7, 45:11, 45:19, 47:7, 66:11
14
15:17, 37:8
15
37:8, 70:10, 71:15, 72:2
1526
3:13
165
4:20
18
21:6, 29:17
19
14:5, 15:10
19806
3:14

2

20
14:5, 15:10, 35:21, 36:1, 36:5, 36:9, 36:13, 50:15, 50:19
20005
3:7
2004
9:14, 9:21, 10:12, 11:3, 14:3, 33:7, 65:8, 65:11, 65:22
2005
65:5, 65:9
202
60:18, 60:19, 61:1, 61:2, 61:4, 61:7, 61:18, 62:2, 62:9, 62:18
202.371
3:8
2020
1:11, 8:15, 8:18, 9:14, 10:13, 11:3, 12:10, 13:1, 14:1, 15:18, 22:19, 23:8, 28:21, 33:7, 34:14, 41:20, 41:22, 42:6, 42:7, 42:15, 42:20, 42:22, 55:6, 65:6, 65:12, 65:20
2021
1:17, 71:15, 72:2
210
55:15, 55:18, 55:20, 56:1, 56:17, 57:14, 58:7, 58:12, 58:17, 59:16, 59:17, 59:20, 60:5, 60:10, 61:5
216
57:8, 57:10
218
57:14, 57:19, 57:21, 58:6, 58:9, 58:17, 58:21, 59:1, 59:5, 59:11, 60:3, 63:4
22
4:11, 41:15
220
56:7, 56:9, 56:11, 56:15, 56:16, 61:8, 61:9
23
4:16
24
28:20
25
30:11, 41:15
26
33:7

3

3
43:10, 61:5, 61:8
30
57:13, 57:18, 57:22, 58:2, 58:5, 58:7, 58:16, 58:21, 59:5, 59:8, 59:11
302.449
3:15
31
1:18, 37:3, 37:9, 37:11, 41:11, 41:15, 71:15
32
35:17
33
37:14, 37:17, 37:20
34
4:17, 38:1, 38:22
343665
1:20
35
39:2, 39:8, 39:13, 61:10
37
41:11, 41:15
38
39:20, 41:11, 50:4, 50:6, 62:6
39
41:11, 62:7

4

4
36:3, 48:4
40
15:14, 35:18, 40:3, 41:15, 51:20
42
4:18
44
35:9
444
9:19, 12:15, 65:3
445
10:19, 65:3
45
51:21
48
35:9

5

5
36:7
51
66:7, 66:8
55
4:19
565
12:10, 19:8,

19:10, 19:16, 19:20, 20:2, 21:3, 21:9, 23:9, 23:16, 23:22, 24:5, 24:7, 25:7, 25:10, 25:13, 25:16, 25:19, 25:22, 26:17, 27:6, 27:10, 27:13, 27:17, 27:22, 28:5, 28:10, 28:13, 29:1, 31:8, 32:22, 33:19, 64:20
58
66:7, 66:8
59
67:17

6

6
36:10
6,006,717
4:17
6,047,681
4:18
6,581,565
1:12, 4:15, 4:16, 8:11
60
40:13, 41:3
600
3:6
62
67:18, 68:10
65
40:6
67
40:6, 40:13, 41:3
68
22:21

7

72
1:21

9

9
1:18, 47:22, 71:15
99
16:6

UNITED STATES PATENT AND TRADEMARK OFFICE

BEFORE THE PATENT TRIAL AND APPEAL BOARD

VOLKSWAGEN GROUP OF AMERICA, INC.,
Petitioner,

v.

MICHIGAN MOTOR TECHNOLOGIES LLC
Patent Owner

Case IPR2020-00445
Patent 6,581,565

DECLARATION OF C. ARTHUR MACCARLEY, PH.D.
IN SUPPORT OF PETITIONER'S REPLY

Mail Stop "Patent Board"
Patent Trial and Appeal Board
U.S. Patent & Trademark Office
P.O. Box 1450
Alexandria, VA 22313-1450

TABLE OF CONTENTS

I. INTRODUCTION 1

II. LEVEL OF ORDINARY SKILL IN THE ART 2

III. UNDERSTANDING OF THE LAW 3

- A. My Understanding of Claim Construction 4
- B. A Person of Ordinary Skill in the Art 4
- C. My Understanding of Obviousness 5

IV. OVERVIEW OF THE ’565 PATENT 11

V. THE PRIOR ART DISCLOSES EVERY LIMITATION OF THE CHALLENGED CLAIMS. 11

- A. The combination of Robichaux and Scherer renders obvious high-pass filtering a difference signal. 12
- B. Robichaux and Scherer do not teach away from the claimed invention. 20
  - 1. Deactivation of Robichaux’s PID controller does not teach away from the claimed invention. 21
  - 2. Scherer’s alternative embodiments do not teach away from the claimed invention. 23

VI. CONCLUSION 25

I, C. Arthur MacCarley, Ph.D., P.E., declare as follows:

I. INTRODUCTION

1. I have been retained as an expert in this proceeding by counsel for Volkswagen Group of America, Inc. I previously submitted a declaration (EX1003) in support of the Petition for *inter partes* review of U.S. Patent No. 6,581,565 ("the '565 patent"). This declaration is in support of Petitioner's Reply to Patent Owner's Response in the same proceeding, IPR2020-00445.

2. I understand that Patent Owner Michigan Motor Technologies LLC submitted a Patent Owner Response (Paper 16) ("POR"). I have been asked to provide my technical review, analysis, insights, and opinions regarding the POR.

3. My background and qualifications were provided in paragraphs 11-19 of my original declaration, Exhibit 1003, and my CV was submitted as Exhibit 1004. My statements in my original declaration regarding my review of the '565 patent and related materials remain unchanged. In reaching my opinions, I carefully reviewed the POR, the Petition for *inter partes* review of the '565 patent, my original declaration, and the materials reviewed as part of my original declaration. EX1003, ¶20 (listing references considered in my prior declaration). In addition, I reviewed and refer to the following materials:

Paper	Description
12	Institution Decision

Paper	Description
16	Patent Owner's Response

Exhibit	Description
1030	Dr. Leonard's Deposition Transcript
1032	Ogata, Katsuhiko. Modern Control Engineering, 4th ed., Prentice Hall, 2002
2004	Dr. Leonard's Second Declaration

4. I have also reviewed all other materials cited herein.

5. My work on this case is being billed at a rate of $300 per hour, with reimbursement for actual expenses. My compensation is not contingent upon the outcome of this *inter partes* review ("IPR").

II. LEVEL OF ORDINARY SKILL IN THE ART

6. I incorporate by reference my understanding of the person of ordinary skill in the art ("POSA") as set forth in paragraphs 40-41 of my previous declaration.

7. As stated in my prior declaration, I understand a person of ordinary skill in the art ("POSA") in the context of the '565 patent as of July 23, 2001 (the earliest possible priority date of the '565 patent) would possess a Bachelor of Science degree in electrical, mechanical, automotive, or a similar field of engineering; be knowledgeable of the principles and operation of internal

combustion engines of that time period; and have the equivalent of two years' experience or hands-on education in the design or implementation of automotive or vehicular control systems or components. Experience could take the place of some formal training, as domain knowledge may be learned on the job. This description is approximate, and a higher level of education or skill might make up for less experience and vice versa.

III. UNDERSTANDING OF THE LAW

8. I incorporate by reference my understanding of the legal principles, including my discussion of claim construction and obviousness, as set forth in my previous declaration. EX1003, ¶¶21-39. I include here certain additional legal understandings.

9. As stated in my prior declaration, I have been told the following legal principles apply to analysis of patentability. I also have been told that, in an *inter partes* review proceeding, a patent claim may be deemed unpatentable if it is shown by a preponderance of the evidence that the claim is anticipated by one prior art reference under 35 U.S.C. § 102, or rendered obvious by one or more prior art references under 35 U.S.C. § 103.

10. I understand that documents and materials such as printed publications or patents that qualify as prior art can be used to render a patent claim as anticipated or as obvious.

11. I understand that, once the claims of a patent have been properly construed, the second step in determining anticipation or obviousness of a patent claim requires a comparison of the properly construed claim language to the prior art on a limitation-by-limitation basis.

A. My Understanding of Claim Construction

12. I understand that during an *inter partes* review proceeding, claims are to be construed in light of the specification as would be read by a person of ordinary skill in the relevant art at the time of the purported priority date. I understand that claim terms are given their ordinary and customary meaning as would be understood by a person of ordinary skill in the relevant art in the context of the entire disclosure. A claim term, however, will not receive its ordinary meaning if the patentee acted as his own lexicographer and clearly set forth a definition of the claim term in the specification. In this case, the claim term will receive the definition set forth in the patent.

B. A Person of Ordinary Skill in the Art

13. I understand that a person of ordinary skill in the relevant art (herein "POSA") is presumed to be aware of all pertinent art, thinks along conventional wisdom in the art, and is a person of ordinary creativity—not an automaton.

14. I have been asked to consider the level of ordinary skill in the field that someone would have had at the time the alleged invention was made. In

deciding the level of ordinary skill, I considered the following:

- the levels of education and experience of persons working in the field;
- the types of problems encountered in the field; and
- the sophistication of the technology.

15. I understand that the relevant time for considering whether a claim would have been obvious to a POSA is at the time of the alleged invention, which I have been told to assume for this case is July 23, 2001.

16. Regardless if I use "I" or "POSA" during my technical analysis below, all of my statements and opinions are to be understood to be based on how a POSA would have understood or read a document at the time of the alleged invention.

C. My Understanding of Obviousness

17. I understand that a patent claim is unpatentable if the claimed invention would have been obvious to a person of ordinary skill in the art at the time of the alleged invention. I understand that this means that even if all of the elements of the claim cannot be found in a single prior art reference that would anticipate the claim, the claim can still be unpatentable.

18. It is my understanding that, to obtain a patent, a claimed invention must have been, as of its earliest possible priority date, non-obvious in view of the

prior art in the field. I understand that a patent claim is obvious when the differences between the subject matter sought to be patented and the prior art are such that the subject matter as a whole would have been obvious to a person of ordinary skill in the art at the time the alleged invention was made. When considering the issues of obviousness, I have been told that I am to do the following:

- Determine the scope and content of the prior art;
- Ascertain the differences between the prior art and the claims at issue;
- Resolve the level of ordinary skill in the pertinent art; and
- Consider evidence of secondary indicia of non-obviousness (if available).

19. With respect to determining the proper scope of prior art to examine, I understand that in order for a prior art reference to be properly used in an obviousness ground under 35 U.S.C. § 103, the prior art reference must be analogous art to the claimed invention. I have been told that a reference is analogous art to the claimed invention only if: (1) the reference is from the same field of endeavor as the claimed invention; or (2) the reference is reasonably pertinent to the particular problem solved by the inventor.

20. I understand that factors relevant to determining the proper field of

endeavor include the inventor's explanations of the subject matter (including the patent specification), as well as the claimed invention's structure and function. And I further understand that to be reasonably pertinent to the particular problem solved by the inventor, a prior art reference must logically commend itself to the inventor's attention in considering his or her problem.

21. I have been told that an analogous reference may be modified or combined with other analogous references or with the POSA's own knowledge if the person would have found the modification or combination obvious. I have also been told that a POSA is presumed to know all relevant, analogous prior art, and the obviousness analysis may take into account the inferences and creative steps that a POSA would employ.

22. In determining whether a prior art reference would have been combined with another prior art reference or other information known to a POSA, I have been told that the following principles may be considered:

- A combination of familiar elements according to known methods is likely to be obvious if it yields predictable results;
- The simple substitution of one known element for another is likely to be obvious if it yields predictable results;
- The use of a known technique to improve similar devices, products, or methods in the same way is likely to be obvious if it

yields predictable results;

- The application of a known technique to a prior art reference that is ready for improvement is likely to be obvious if it yields predictable results;
- Any need or problem known in the field and addressed by the reference can provide a reason for combining the elements in the manner claimed;
- A skilled artisan often will be able to fit the teachings of multiple references together like a puzzle; and
- The proper analysis of obviousness requires a determination of whether a POSA would have a "reasonable expectation of success"—not "absolute predictability" of success—in achieving the claimed invention by combining prior art references.

23. I understand that whether a prior art reference renders a claim unpatentable as obvious is determined from the perspective of a POSA. I have also been told that, while there is no requirement for the prior art to contain an express suggestion to combine known elements to achieve the claimed invention, a suggestion to combine known elements to achieve the claimed invention may come from the prior art as a whole or individually, as filtered through the knowledge of one skilled in the art. In addition, I have been told the inferences and creative steps

a person of ordinary skill in the art would employ are also relevant to the determination of obviousness.

24. I also understand that when a work is available in one field, design alternatives and other market forces can prompt variations of it, either in the same field or in another. I have also been told that if a POSA can implement a predictable variation and would see the benefit of doing so, that variation is likely to be obvious. I have been told that in many fields, there may be little discussion of obvious combinations, and in these fields market demand—not scientific literature—may drive design trends. I have been told that, when there is a design need or market pressure and there are a finite number of predictable solutions, a POSA has good reason to pursue those known options.

25. I have been told there is no rigid rule prescribing that a reference or combination of references must contain a "teaching, suggestion, or motivation" to combine references. But I also have been told that the "teaching, suggestion, or motivation" test can be a useful guide in establishing a rationale for combining elements of the prior art. I have been told that this test poses the question as to whether there is an express or implied teaching, suggestion, or motivation to combine prior art elements in a way that realizes the claimed invention and that it seeks to counter impermissible hindsight analysis.

26. As stated in my prior declaration, I understand that a patent claim can

be considered obvious to a POSA at the time the application was filed and that the teachings of two or more prior art references may be combined if that combination would have been obvious to POSA. EX1003, ¶35.

27. I further understand that a reference must be considered not only for what it expressly teaches but also for what the fairly suggests to a POSA.

28. I further understand that the test for obviousness is what the combined teachings of the references would have suggested to a POSA. I also understand that a finding of obviousness cannot be overcome by attacking references individually where the obviousness rationale is based upon the teachings of a combination of references. And I further understand that a claimed invention may be obvious even when the prior art does not teach each claim limitation, so long as the record contains some reason that would cause a POSA to modify the prior art to obtain the claimed invention.

29. I further understand that whether a prior art reference teaches away from the claimed invention is a factor to be considered in determining obviousness. I also understand that it is improper to combine references that teach away from their combination. I further understand that teaching away means that a reference criticizes, discredits, or otherwise discourages the solution claimed or the manner of combination.

30. As stated in my prior declaration, I understand that the proper

construction of any term is how a person of ordinary skill in the art would have understood the term based on the term's use in the claims, specification, and file history of the patent. EX1003, ¶25.

IV. OVERVIEW OF THE '565 PATENT

31. I incorporate by reference my discussion of the overview of the '565 Patent, including my discussion of the technology overview, the problem that the '565 patent alleges existed in the prior art, the alleged invention of the '565 patent, the prosecution history summary, and claim construction as set forth in my previous declaration. EX1003, ¶¶42-69.

V. THE PRIOR ART DISCLOSES EVERY LIMITATION OF THE CHALLENGED CLAIMS.

32. From my review of the POR, Dr. Leonard's declaration, and Dr. Leonard's transcript, Patent Owner's arguments are directed to a single limitation: "a high pass filter which receives as an input the difference signal." Patent Owner also does not contend that any elements recited in claims 2-6 are absent from the prior art.

33. I note that Patent Owner's declarant Dr. Leonard admitted that a device having a torque demand controller generating a torque demand signal and a torque producer receiving the torque demand signal were well known before the time of the '565 patent. EX1030, 25:6-8, 27:8-11. Dr. Leonard also admitted that using an estimator for outputting an estimated torque signal, a comparator for

outputting a difference signal based on the estimated torque signal and the demand torque signal, and a high-pass filter for outputting a filtered signal to a transient torque controller were well known before the time of the ’565 patent. EX1030, 25:9-20, 27:12-28:1. Dr. Leonard further admitted that using a transient torque controller for outputting spark and fuel adjustment signals based on high-pass filtered signals was well known. EX1030, 25:21-26:1, 28:2-11. Patent Owner’s only dispute is that the applied art allegedly fails to disclose the recited arrangement of a high-pass filter receiving a difference signal outputted from a comparator. POR, 9; EX1030, 26:2-27:3.

34. As explained in my prior declaration, the combination of Robichaux and Scherer discloses all the limitations of independent claims 1 and 7, including the contested limitation “a high pass filter which receives as an input the difference signal.” DI, 36-38; EX1003, ¶¶81-129. In my opinion, the POR (1) ignores what the combination of Robichaux and Scherer suggests as a whole; and (2) applies a flawed argument that Scherer teaches away from Robichaux.

A. The combination of Robichaux and Scherer renders obvious high-pass filtering a difference signal.

35. In my opinion, the Board’s Institution Decision correctly found based on Petitioner’s evidence that the combination of Robichaux and Scherer render obvious a high-pass filter that receives a difference signal representing the difference between a torque demand and an estimated torque. DI, 36-38.

36. Robichaux discloses a comparator that generates a "torque error" signal by subtracting an estimated torque from a demand torque. EX1003, ¶¶105–07; EX1020, ¶¶0029-30, FIG. 3; POR, 10, 22. Robichaux further discloses outputting the torque error signal to a PID controller 220, which is suspended during abrupt transient conditions. EX1020, ¶0032; EX1003, ¶¶85-87. Suspending the PID controller 220 during trainset conditions, Robichaux invited combinations with references disclosing transient torque control, as explained in the Petition and my first declaration. EX1003, ¶¶87, 109.

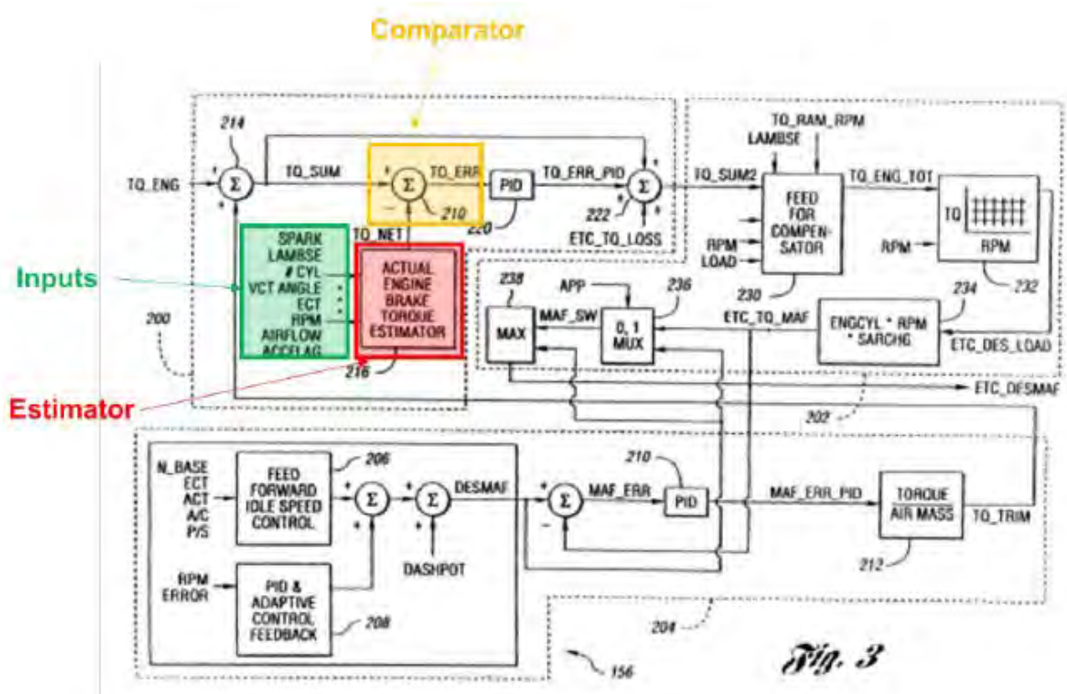

EX1020, FIG. 3 (annotated).

37. Scherer explicitly discloses a high-pass filter 4 that "filters the dynamic desired engine torque part (M_d) … from the desired engine torque (M_{des})

… and in turn provides the dynamic desired engine torque (M_d) to the device for the ignition point adjustment" in Figure 1 and the device for fuel adjustment in Figure 2. EX1007, 4:40-45. Scherer's ignition point adjustment system in Figure 1 and fuel adjustment system in Figure 2 are used "to adjust specifically that dynamic desired engine torque component which cannot be regulated by the air-flow rate-regulating branch." EX1007, 4:20-31.

38. As explained in my first declaration and as the Board correctly determined, a POSA would have been motivated to combine Scherer's transient control branch, including Scherer's high-pass filter 4, with Robichaux's controller so that Robichaux's controller can correct torque output during transient conditions. DI, 37; EX1003, ¶¶81-92; EX1007, 1:7-11, 2:51-59, 4:20-52, 4:60-67, 5:10-55, FIGs. 1, 2; EX1019, 138; EX1020, ¶¶0001, 0016-1818, 0023, 0025, 0027, 0032-33, 0048, FIGs. 2, 3.

39. In my first declaration, I explained that Robichaux's PID controller is subject to the well-known problem of "integrator wind-up" during rapid input transients, and that Robichaux apparently recognizes this problem and suspends the PID controller during abrupt transient torque conditions. EX1003, ¶¶85-87; EX1020, ¶0032. Robichaux is silent as to the control that replaces the PID while it is suspended during transient conditions. But some alternative control function must exist in order to assure continuity and stability of the control during transient

conditions. Therefore, a POSA would have sought out alternative transient controls, such as Scherer's transient control branch that uses a high-pass filter to rapidly compensate the torque output during transient conditions. EX1003, ¶¶85-87.

40. Indeed, combining Scherer's transient control branch with Robichaux's torque controller would have yielded the predictable advantage of permitting rapid torque adjustment during transient engine operations. DI, 37; EX1003, ¶¶82-92; EX1007, 5:10-15 ("The embodiment of FIG. 1 therefore permits a comparatively **rapid engine torque adjustment** which can follow very fast desired engine torque changes.") (emphasis added). As I explained in my first declaration, the similarities between Robichaux and Scherer would have encouraged a POSA to combine their teachings. Namely, Robichaux and Scherer are both in the field of engine control systems for controlling engine parameters in accordance with monitored torque output. EX1003, ¶82. And as explained in my first declaration, a POSA would have understood how to combine Robichaux's and Scherer's teachings by simply modifying the software instructions stored in the microcomputer of Robichaux's controller—a standard skill and method known in the art before the '565 patent. EX1003, ¶91; EX1030, 64:16-65:2. As I previously opined, combining Scherer's transient control branch with Robichaux's controller would have merely been applying a known technique in a similar, known device in

the same way to expedite the response time for correcting the transient component of the torque demand. EX1003, ¶¶82-92.

41. And as the Board correctly observed in the Institution Decision, combining Scherer's transient torque control branch in lieu of Robichaux's PID controller 220 would result in the high-pass filter 4 receiving the difference signal outputted from Robichaux's comparator, thereby allowing Robichaux's controller to optimally control engine torque in *both* steady-state and transient conditions. DI, 37. When looking to combine Scherer's transient torque control branch with Robichaux's torque control unit, a POSA would have configured Scherer's transient control branch to be parallel to Robichaux's PID controller 220 such that the Robichaux's torque error signal (TQ_ERROR) is inputted into Scherer's high-pass filter during transient conditions. EX1003, ¶113. As shown below in Figure 1 of Scherer, the transient control branch is logically configured in parallel to a steady-state PID controller 3, which is analogous to Robichaux's PID controller 220.

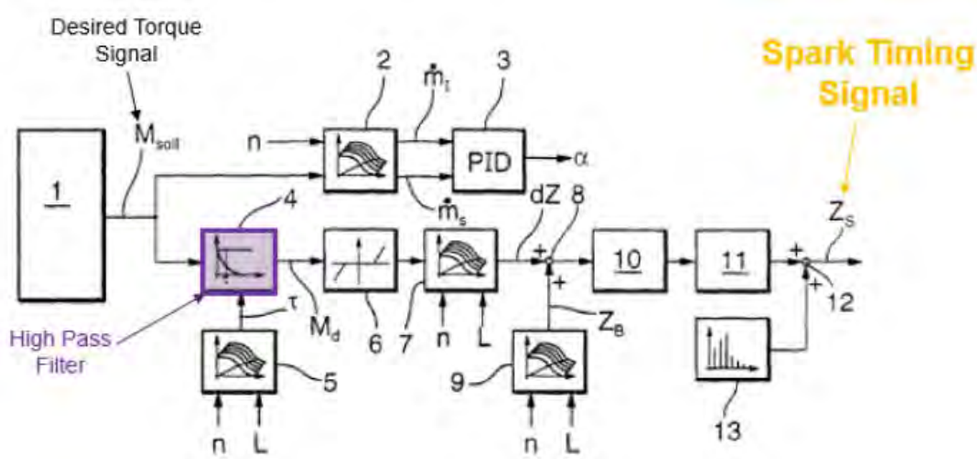

EX1007, FIG. 1 (annotated).

42. Accordingly, when combining Scherer's teachings with those of Robichaux, a POSA would have configured Scherer's transient torque control branch to be parallel with the Robichaux's PID controller 220, and to receive Robichaux's torque error signal (TQ_ERROR) during transient conditions.

43. Moreover, a POSA would have understood that Scherer's high-pass filter is positioned at the input of the transient torque controller. First, as acknowledged by Patent Owner's expert, Scherer discloses that the desired torque signal outputted from the engine torque coordination unit 1 is merely an "example," implying that other types of signals, such as a difference signal, may be inputted into the high-pass filter. EX1007, 3:60-63 ("[A]n engine torque coordination unit 1 provides a signal indicative, **for example**, of the desired engine torque (M_{des}) requested by the driver via the accelerator pedal.") (emphasis added); EX1030, 68:13-69:12. Second, Scherer discloses particular advantages associated

with high-pass filter signal processing that are applicable to both a torque demand signal and a difference signal. EX1007, 4:45-52, 5:10-15. These advantages include (1) removing the low frequency component to permit a rapid response to correcting torque output and (2) reducing the torque output as the transient component decays to zero. EX1007, 4:45-52, 5:10-15. Third, a POSA would have understood at the time of the ’565 patent that high-pass filters, such as a lead compensator, are commonly located downstream of a comparator junction of a feedback loop and upstream of another functional block, such as a transient controller in a control system, to offset lag during transient conditions. EX1032, pp. 622-23, FIG. 9-5. Thus, a POSA would have understood that a torque difference signal, rather than the Scherer’s torque desired signal, can be inputted to a high-pass filter at an input side of a Scherer’s ignition and fuel adjustment branches to expediently adjust torque output.

44. And a POSA would have understood that Robichaux’s difference signal would have been further processed to translate the difference signal into a corrective action to be performed by the transient torque controller so that it correctly implements the intended fuel (AFR) and ignition timing (spark) adjustments. Indeed, as shown in Figure 3, Robichaux uses the PID controller 220 to process the torque error signal before generating the feedback signal for throttle valve control. EX1020, ¶¶0034-35. In view of this arrangement shown in Figure 3,

a POSA would have understood that the torque error signal is further processed to translate it into the appropriate adjustments to the spark timing and fuel injection quantity.

45. Accordingly, in my opinion, it would have been obvious to use Scherer's high-filter 4 to receive Robichaux's torque error signal—a difference signal. EX1003, ¶¶112-14.

46. From my review of the POR and Dr. Leonard's declaration, Patent Owner attacks Scherer in isolation and ignores what Robichaux and Scherer suggest as a whole to render obvious a high-pass filter that receives a torque difference signal.

47. Patent Owner argues that "no prior art reference relied upon by the Petitioner or the Board discloses producing a 'difference signal' by comparing an 'estimated torque signal' and a 'desired torque signal' and then high-pass filtering such 'difference signal.'" POR, 15. Patent Owner points to the embodiments shown in Figures 1 and 2 of Scherer and argues that "only the dynamic component of the desired engine torque is high-pass filtered and no comparator is used to compare an 'estimated torque signal' to the 'desired torque signal.'" POR, 17. This is incorrect. Patent Owner ignores the Petition's combined teachings of (1) Robichaux outputting a difference signal to a PID controller 220 that is suspended during transient conditions and (2) Scherer using a transient control branch having

a high-pass filter that outputs a signal to a transient torque controller, as explained above. EX1003, ¶¶85-90, 109-14; EX1020, ¶¶0030-32 (The PID controller 220 "is preferably **deactivated during these transient modes**") (emphasis added); EX1007, 2:51-54; 4:20-5:9 ("In order to adjust the dynamic desired torque component which exceeds this quasi-static part, an ignition point adjusting branch, with the input-side high-pass filter, is provided in parallel to the air-flow-rate-regulating branch.").

48. Accordingly, as explained in my first declaration, a POSA would have been motivated to transmit Robichaux's torque error signal to the high-pass filter 4 of Scherer's transient control branch "so that the transient torque control branch can respond to the transient circumstance in lieu of Robichaux's PID controller 220." DI, 37; *see also* EX1003, ¶¶81-92.

B. Robichaux and Scherer do not teach away from the claimed invention.

49. Patent Owner asserts that Robichaux and Scherer teaches away from their combination because (1) Robichaux's controller purposely limits control of transient torque output by deactivating the PID controller 220 during transient conditions, and (2) Scherer's alternative embodiment shown in Figures 3 and 4 uses a model-based estimated value stage, instead of a high-pass filter, to determine the dynamic desired engine torque component. POR, 12-23.

50. In my opinion, Patent Owner's assertions are premised on

mischaracterizations of the applied art and technically unsupported conclusions.

1. Deactivation of Robichaux's PID controller does not teach away from the claimed invention.

51. Patent Owner asserts that Robichaux discourages a POSA from correcting torque output during transient conditions because Robichaux's controller suspends the PID controller during certain transient torque limiting control modes. POR, 21. But Patent Owner's critique of Robichaux is premised on the mischaracterization that Robichaux teaches against an engine controller correcting transient torque output.

52. First, Patent Owner's assertion that Robichaux discourages any attempt to correct transient torque output simply cannot be true. Otherwise, Robichaux's engine controller would never be able to provide adequate fuel and spark adjustments to correct torque output during transient conditions, such as shifting a gear or controlling idle engine speed. Indeed, discouraging correction of transient torque output would contradict an established practice in automotive engineering, recognizing that supplemental fuel must be provided during rapid throttle (torque demand) changes. For example, well before the '565 patent, the accelerator pump came standard with carburetors to serve this role of supplementing fuel during transient conditions.

53. Second, Patent Owner ignores the fact that Robichaux recognizes that transient torque demand conditions require a different more rapidly-acting form of

control in addition to or replacing the slower steady state control that relies on the changing the air throttle position (electronic or mechanical). *See* EX1020, ¶0032. As stated in Robichaux, the PID controller 220 is suspended during transients "to prevent interference between the control parameters for air and fuel flow and the transient torque control parameters such as spark retard or injector/cylinder cutout." EX1020, ¶0032; EX1003, ¶86. As explained in my first declaration, Robichaux recognizes that if allowed to continue to operate during an abrupt transient, the integrator function of the PID control could cause an overshoot of the torque output following an abrupt change in the torque demand. This problem of overshooting torque output is well-known as integrator windup. Integrator windup results in an excessive error quantity that is accumulated during the transient, which is discharged in the reverse direction (i.e., overshoot) following the transient. Robichaux therefore suspends the PID controller during transient conditions. EX1020, ¶0032; EX1003, ¶86. Accordingly, Robichaux invites other techniques, such as Scherer's transient control branch, that are specifically and expressly intended to rapidly compensate the torque deficiency during transient conditions.

54. Thus, in my opinion, Patent Owner's argument that Robichaux teaches away from transient torque control is unsupported and technically unsound.

2. Scherer's alternative embodiments do not teach away from the claimed invention.

55. Patent Owner asserts that Scherer discourages a POSA from using a high-pass filter with a difference signal because Scherer's alternative embodiment shown in Figures 3 and 4 uses a model estimation stage, rather than a high-pass filter, to determine a dynamic component of a desired torque signal. POR, 16-18, 21-22. But Scherer's disclosure of alternative embodiments—a high-pass filter and a model estimation stage—for determining a dynamic component does not mean Scherer teaches away from using a high-pass filter to receive a difference signal. I disagree that Scherer's alternative embodiment shown in Figures 3 and 4 teaches away from receiving Robichaux's torque error signal. Scherer's model-based estimated determination stage and subtractor are a programmable construct that can be implemented in software with other functionalities, such as a high-pass filter. The programming of the model-based estimator is left unspecified in Scherer to allow such generality in a given engine application. Thus, in my opinion, Scherer's disclosure of alternative embodiment in Figures 3 and 4 invites the combination of components, such as a high-pass filter receiving a torque difference signal generated by a comparator.

56. Furthermore, nowhere does Scherer criticize, discredit, or discourage a skilled artisan from using a high-pass filter to receive a torque difference signal. Patent Owner argues that Scherer's description of the embodiment shown in Figure

3 discourages a POSA from using of a high-pass filter following a comparator. POR, 17-18, 21. This section of Scherer discloses "[t]his embodiment corresponds to that of FIG. 1 except that, instead of the high pass filter stage, a model-based estimated value stage is provided to determine the dynamic desired engine torque component." EX1007, 6:3-12; POR, 17-18, 21.

57. Scherer's description of an alternative more general embodiment would not have discouraged a person of ordinary skill in the art from using a high-pass filter that receives a difference signal. Rather, Scherer merely discloses two ways—a high-pass filter and a model-based estimation value stage—for determining a dynamic component of a torque signal. Scherer never discloses that the model-estimation (Figures 3 and 4) stage and the high-pass filter (Figures 1 and 2) are mutually exclusive. And Scherer does not discredit using both a high-pass filter and an estimation stage in a torque producer of an engine controller.

58. Thus, in my opinion, Scherer's two alternative embodiments—high-pass filter shown in Figures 1 and 2 and the model estimation shown in Figures 3 and 4—are not a teaching away.

VI. CONCLUSION

In signing this Declaration, I recognize that this Declaration will be filed as evidence in an *inter partes* review before the Patent Trial and Appeal Board of the United States Patent and Trademark Office. I also recognize that I may be subject to cross-examination in the case and that cross-examination will take place within the United States. If cross-examination is required, I will appear for cross-examination within the United States during the time allotted.

I hereby declare that all statements made herein are made of my own knowledge and are true and that all statements made on information and belief are believed to be true; and further that these statements were made with the knowledge that willful false statements and the like so made are punishable by fine or imprisonment, or both, under Section 1001 of Title 18 of the United States Code.

Executed on this 21 th day of January, 2021.

C. Arthur MacCarley, Ph.D.

OGATA

FOURTH EDITION

MODERN CONTROL ENGINEERING

AEEIZH

IV

KATSUHIKO OGATA

MODERN CONTROL ENGINEERING

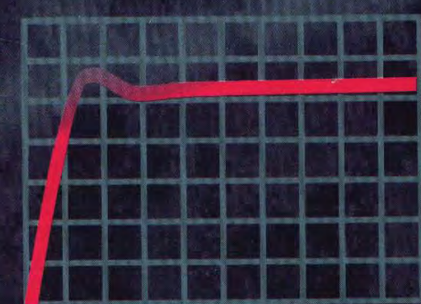

FOURTH EDITION

PETITIONER'S EXHIBIT 1002
US PATENT NO. 6,581,565
Page 9787

Modern Control Engineering

Fourth Edition

Katsuhiko Ogata

University of Minnesota

11071
83.6.30

Prentice Hall

Pearson Education International

PETITIONER'S EXHIBIT 1002
US PATENT NO. 6,581,565
Page 9788

TJ
213
.O43
2002
C.1

Ogata, Katsuhiko
Modern Control Engineering / Katsuiko Ogata.- 4th ed.- New Jersey: prentice-Hall,
Tehran: A'eizh, 1381 = 2002.
964 P.: ill.
Cataloging based on CIP information.
Reprint of 4th ed., 2002. Prentice Hall, New Jersey,
ISBN 0-13-043245-8. 1. Automatic control.
3. Control Engineering 2. Control Theory I. Title. Modern Control Engineering.
TJ 213 A7 M2 698/8
2002
National lib. of Iran M81-12481

AEEIZH

Book Name : **Modern Control Engineering**
by : **Katsuhiko Ogata**
Publisher : **Aeeizh**
Lithography : **Norang**
Printing & bookbinding : **Pezhman**
Size : **20.5 x 22.5**
Time & date of 1st print : **Fall, 1381 (2002)**
Number : **1500**
Number of Pages : **976**

DISTRIBUTORS

KETABIRAN : PHONE NO : 021- 6423416, 021 - 6926687
NOPARDAZAN : PHONE NO : 021 - 6411173, 021 - 6494409

PETITIONER'S EXHIBIT 1002
US PATENT NO. 6,581,565
Page 9789

This edition may be sold only in those countries
to which it is consigned by Pearson Education International.
It is not to be re-exported and it is not for sale
in the U.S.A., Mexico, or Canada.

Vice President and Editorial Director, ECS: *Marcia J. Horton*
Publisher: *Tom Robbins*
Acquisitions Editor: *Eric Frank*
Associate Editor: *Alice Dworkin*
Editorial Assistant: *Jessica Romeo*
Vice President and Director of Production and Manufacturing, ESM: *David W. Riccardi*
Executive Managing Editor: *Vince O'Brien*
Managing Editor: *David A. George*
Production Editor: *Scott Disanno*
Composition: *Preparé, Inc.*
Director of Creative Services: *Paul Belfanti*
Creative Director: *Carole Anson*
Art Director: *Jayne Conte*
Art Editor: *Xiaohong Zhu*
Manufacturing Manager: *Trudy Pisciotti*
Manufacturing Buyer: *Lisa McDowell*
Marketing Manager: *Holly Stark*

Prentice Hall

©2002, 1997, 1990, 1970 by Prentice-Hall, Inc.
Upper Saddle River, New Jersey 07458

All rights reserved. No part of this book may be reproduced, in any form or by any means, without permission in writing from the publisher.

MATLAB is a registered trademark of The MathWorks, Inc.,
The MathWorks, Inc., 3 Apple Hill Drive, Natick, MA 01760-2098
WWW: http://www.mathworks.com

The author and publisher of this book have used their best efforts in preparing this book. These efforts include the development, research and testing of the theories and programs to determine their effectiveness. The author and publisher make no warranty of any kind, expressed or implied, with regard to these programs or the documentation contained in this book. The author and publisher shall not be liable in any event for incidental or consequential damages in connection with, or arising out of, the furnishing, performance, or use of these programs.

Printed in the United States of America

10 9 8 7 6 5 4 3 2 1

ISBN: 0-13-043245-8

Pearson Education Ltd., *London*
Pearson Education Australia Pty., Limited, *Sydney*
Pearson Education Singapore, Pte. Ltd
Pearson Education North Asia Ltd., *Hong Kong*
Pearson Education Canada, Ltd., *Toronto*
Pearson Education de Mexico, S.A. de C.V.
Pearson Education—Japan, *Tokyo*
Pearson Education Malaysia, Pte. Ltd.
Pearson Education, *Upper Saddle River, New Jersey*

PETITIONER'S EXHIBIT 1002
US PATENT NO. 6,581,565
Page 9790

Contents

Preface ix

Chapter 1 Introduction to Control Systems 1

1–1 Introduction 1
1–2 Examples of Control Systems 3
1–3 Closed-Loop Control versus Open-Loop Control 6
1–4 Outline of the Book 8

Chapter 2 The Laplace Transform 9

2–1 Introduction 9
2–2 Review of Complex Variables and Complex Functions 10
2–3 Laplace Transformation 13
2–4 Laplace Transform Theorems 23
2–5 Inverse Laplace Transformation 32
2–6 Partial-Fraction Expansion with MATLAB 36
2–7 Solving Linear, Time-Invariant, Differential Equations 40
Example Problems and Solutions 42
Problems 51

PETITIONER'S EXHIBIT 1002
US PATENT NO. 6,581,565
Page 9791

Chapter 3 Mathematical Modeling of Dynamic Systems 53

3–1 Introduction 53
3–2 Transfer Function and Impulse-Response Function 55
3–3 Automatic Control Systems 58
3–4 Modeling in State Space 70
3–5 State-Space Representation of Dynamic Systems 76
3–6 Transformation of Mathematical Models with MATLAB 83
3–7 Mechanical Systems 85
3–8 Electrical and Electronic Systems 90
3–9 Signal Flow Graphs 104
3–10 Linearization of Nonlinear Mathematical Models 112
Example Problems and Solutions 115
Problems 146

Chapter 4 Mathematical Modeling of Fluid Systems and Thermal Systems 152

4–1 Introduction 152
4–2 Liquid-Level Systems 153
4–3 Pneumatic Systems 158
4–4 Hydraulic Systems 175
4–5 Thermal Systems 188
Example Problems and Solutions 192
Problems 211

Chapter 5 Transient and Steady-State Response Analyses 219

5–1 Introduction 219
5–2 First-Order Systems 221
5–3 Second-Order Systems 224
5–4 Higher Order Systems 239
5–5 Transient-Response Analysis with MATLAB 243
5–6 An Example Problem Solved with MATLAB 271
5–7 Routh's Stability Criterion 275
5–8 Effects of Integral and Derivative Control Actions on System Performance 281
5–9 Steady-State Errors in Unity-Feedback Control Systems 288
Example Problems and Solutions 294
Problems 330

PETITIONER'S EXHIBIT 1002
US PATENT NO. 6,581,565
Page 9792

Chapter 6 Root-Locus Analysis 337

6–1 Introduction 337
6–2 Root-Locus Plots 339
6–3 Summary of General Rules for Constructing Root Loci 351
6–4 Root-Locus Plots with MATLAB 358
6–5 Positive-Feedback Systems 373
6–6 Conditionally Stable Systems 378
6–7 Root Loci for Systems with Transport Lag 379
Example Problems and Solutions 384
Problems 413

Chapter 7 Control Systems Design by the Root-Locus Method 416

7–1 Introduction 416
7–2 Preliminary Design Considerations 419
7–3 Lead Compensation 421
7–4 Lag Compensation 429
7–5 Lag–Lead Compensation 439
7–6 Parallel Compensation 451
Example Problems and Solutions 456
Problems 488

Chapter 8 Frequency-Response Analysis 492

8–1 Introduction 492
8–2 Bode Diagrams 497
8–3 Plotting Bode Diagrams with MATLAB 516
8–4 Polar Plots 523
8–5 Drawing Nyquist Plots with MATLAB 531
8–6 Log-Magnitude-versus-Phase Plots 539
8–7 Nyquist Stability Criterion 540
8–8 Stability Analysis 550
8–9 Relative Stability 560
8–10 Closed-Loop Frequency Response of Unity-Feedback Systems 575
8–11 Experimental Determination of Transfer Functions 584
Example Problems and Solutions 589
Problems 612

PETITIONER'S EXHIBIT 1002
US PATENT NO. 6,581,565
Page 9793

Chapter 9 Control Systems Design by Frequency Response **618**

9–1 Introduction 618
9–2 Lead Compensation 621
9–3 Lag Compensation 630
9–4 Lag–Lead Compensation 639
9–5 Concluding Comments 645
Example Problems and Solutions 648
Problems 679

Chapter 10 PID Controls and Two-Degrees-of-Freedom Control Systems **681**

10–1 Introduction 681
10–2 Tuning Rules for PID Controllers 682
10–3 Computational Approach to Obtain Optimal Sets of Parameter Values 692
10–4 Modifications of PID Control Schemes 700
10–5 Two-Degrees-of-Freedom Control 703
10–6 Zero-Placement Approach to Improve Response Characteristics 705
Example Problems and Solutions 724
Problems 745

Chapter 11 Analysis of Control Systems in State Space **752**

11–1 Introduction 752
11–2 State-Space Representations of Transfer-Function Systems 753
11–3 Transformation of System Models with MATLAB 760
11–4 Solving the Time-Invariant State Equation 764
11–5 Some Useful Results in Vector-Matrix Analysis 772
11–6 Controllability 779
11–7 Observability 786
Example Problems and Solutions 792
Problems 824

PETITIONER'S EXHIBIT 1002
US PATENT NO. 6,581,565
Page 9794

Chapter 12 Design of Control Systems in State Space 826

12–1 Introduction 826
12–2 Pole Placement 827
12–3 Solving Pole-Placement Problems with MATLAB 839
12–4 Design of Servo Systems 843
12–5 State Observers 855
12–6 Design of Regulator Systems with Observers 882
12–7 Design of Control Systems with Observers 890
12–8 Quadratic Optimal Regulator Systems 897
Example Problems and Solutions 910
Problems 948

References 952

Index 956

PETITIONER'S EXHIBIT 1002
US PATENT NO. 6,581,565
Page 9795

Preface

This book presents a comprehensive treatment of the analysis and design of control systems. It is written at the level of the senior engineering (mechanical, electrical, aerospace, and chemical) student and is intended to be used as a text for the first course in control systems. The prerequisite on the part of the reader is that he or she has had introductory courses on differential equations, vector-matrix analysis, circuit analysis, and mechanics.

The main revision made in the fourth edition of the text is to present two-degrees-of-freedom control systems to design high performance control systems such that steady-state errors in following step, ramp, and acceleration inputs become zero. Also, newly presented is the computational (MATLAB) approach to determine the pole-zero locations of the controller to obtain the desired transient response characteristics such that the maximum overshoot and settling time in the step response be within the specified values. These subjects are discussed in Chapter 10. Also, Chapter 5 (primarily transient response analysis) and Chapter 12 (primarily pole placement and observer design) are expanded using MATLAB. Many new solved problems are added to these chapters so that the reader will have a good understanding of the MATLAB approach to the analysis and design of control systems. Throughout the book computational problems are solved with MATLAB.

This text is organized into 12 chapters. The outline of the book is as follows. Chapter 1 presents an introduction to control systems. Chapter 2 deals with Laplace transforms of commonly encountered time functions and some of the useful theorems on Laplace transforms. (If the students have an adequate background on Laplace transforms, this chapter may be skipped.) Chapter 3 treats mathematical modeling of dynamic systems

PETITIONER'S EXHIBIT 1002
US PATENT NO. 6,581,565
Page 9796

(mostly mechanical, electrical, and electronic systems) and develops transfer function models and state-space models. This chapter also introduces signal flow graphs. Discussions of a linearization technique for nonlinear mathematical models are included in this chapter.

Chapter 4 presents mathematical modeling of fluid systems (such as liquid-level systems, pneumatic systems, and hydraulic systems) and thermal systems. Chapter 5 treats transient response analyses of dynamic systems to step, ramp, and impulse inputs. MATLAB is extensively used for transient response analysis. Routh's stability criterion is presented in this chapter for the stability analysis of higher order systems. Steady-state error analysis of unity-feedback control systems is also presented in this chapter.

Chapter 6 treats the root-locus analysis of control systems. Plotting root loci with MATLAB is discussed in detail. In this chapter root-locus analyses of positive-feedback systems, conditionally stable systems, and systems with transport lag are included. Chapter 7 presents the design of lead, lag, and lag–lead compensators with the root-locus method. Both series and parallel compensation techniques are discussed.

Chapter 8 presents basic materials on frequency-response analysis. Bode diagrams, polar plots, the Nyquist stability criterion, and closed-loop frequency response are discussed including the MATLAB approach to obtain frequency response plots. Chapter 9 treats the design and compensation techniques using frequency-response methods. Specifically, the Bode diagram approach to the design of lead, lag, and lag–lead compensators is discussed in detail.

Chapter 10 first deals with the basic and modified PID controls and then presents computational (MATLAB) approach to obtain optimal choices of parameter values of controllers to satisfy requirements on step response characteristics. Next, it presents two-degrees-of-freedom control systems. The chapter concludes with the design of high performance control systems that will follow a step, ramp, or acceleration input without steady-state error. The zero-placement method is used to accomplish such performance.

Chapter 11 presents a basic analysis of control systems in state space. Concepts of controllability and observability are given here. This chapter discusses the transformation of system models (from transfer-function model to state-space model, and vice versa) with MATLAB. Chapter 12 begins with the pole placement design technique, followed by the design of state observers. Both full-order and minimum-order state observers are treated. Then, designs of type 1 servo systems are discussed in detail. Included in this chapter are the design of regulator systems with observers and design of control systems with observers. Finally, this chapter concludes with discussions of quadratic optimal regulator systems.

In this book, the basic concepts involved are emphasized and highly mathematical arguments are carefully avoided in the presentation of the materials. Mathematical proofs are provided when they contribute to the understanding of the subjects presented. All the material has been organized toward a gradual development of control theory.

Throughout the book, carefully chosen examples are presented at strategic points so that the reader will have a clear understanding of the subject matter discussed. In addition, a number of solved problems (A-problems) are provided at the end of each chapter, except Chapter 1. These solved problems constitute an integral part of the text. Therefore, it is suggested that the reader study all these problems carefully to obtain a

PETITIONER'S EXHIBIT 1002
US PATENT NO. 6,581,565
Page 9797

deeper understanding of the topics discussed. In addition, many problems (without solutions) of various degrees of difficulty are provided (B-problems). These problems may be used as homework or quiz purposes. An instructor using this text can obtain a complete solutions manual (for B-problems) from the publisher.

Most of the materials including solved and unsolved problems presented in this book have been class tested in senior level courses on control systems at the University of Minnesota.

If this book is used as a text for a quarter course (with 40 lecture hours), most of the materials in the first 10 chapters (except perhaps Chapter 4) may be covered. [The first nine chapters cover all basic materials of control systems normally required in a first course on control systems. Many students enjoy studying computational (MATLAB) approach to the design of control systems presented in Chapter 10. It is recommended that Chapter 10 be included in any control courses.] If this book is used as a text for a semester course (with 56 lecture hours), all or a good part of the book may be covered with flexibility in skipping certain subjects. Because of the abundance of solved problems (A-problems) that might answer many possible questions that the reader might have, this book can also serve as a self-study book for practicing engineers who wish to study basic control theory.

I would like to express my sincere appreciation to Professors Athimoottil V. Mathew (Rochester Institute of Technology), Richard Gordon (University of Mississippi), Guy Beale (George Mason University), and Donald T. Ward (Texas A & M University), who made valuable suggestions at the early stage of the revision process, and anonymous reviewers who made many constructive comments. Appreciation is also due to my former students, who solved many of the A-problems and B-problems included in this book.

Katsuhiko Ogata

PETITIONER'S EXHIBIT 1002
US PATENT NO. 6,581,565
Page 9798

1

Introduction to Control Systems

1–1 INTRODUCTION

Automatic control has played a vital role in the advance of engineering and science. In addition to its extreme importance in space-vehicle systems, missile-guidance systems, robotic systems, and the like, automatic control has become an important and integral part of modern manufacturing and industrial processes. For example, automatic control is essential in the numerical control of machine tools in the manufacturing industries, in the design of autopilot systems in the aerospace industries, and in the design of cars and trucks in the automobile industries. It is also essential in such industrial operations as controlling pressure, temperature, humidity, viscosity, and flow in the process industries.

Since advances in the theory and practice of automatic control provide the means for attaining optimal performance of dynamic systems, improving productivity, relieving the drudgery of many routine repetitive manual operations, and more, most engineers and scientists must now have a good understanding of this field.

Historical Review. The first significant work in automatic control was James Watt's centrifugal governor for the speed control of a steam engine in the eighteenth century. Other significant works in the early stages of development of control theory were due to Minorsky, Hazen, and Nyquist, among many others. In 1922, Minorsky worked on automatic controllers for steering ships and showed how stability could be determined from the differential equations describing the system. In 1932, Nyquist developed a relatively simple procedure for determining the stability of closed-loop systems on the

PETITIONER'S EXHIBIT 1002
US PATENT NO. 6,581,565
Page 9800

basis of open-loop response to steady-state sinusoidal inputs. In 1934, Hazen, who introduced the term servomechanisms for position control systems, discussed the design of relay servomechanisms capable of closely following a changing input.

During the decade of the 1940s, frequency-response methods (especially the Bode diagram methods due to Bode) made it possible for engineers to design linear closed-loop control systems that satisfied performance requirements. From the end of the 1940s to the early 1950s, the root-locus method due to Evans was fully developed.

The frequency-response and root-locus methods, which are the core of classical control theory, lead to systems that are stable and satisfy a set of more or less arbitrary performance requirements. Such systems are, in general, acceptable but not optimal in any meaningful sense. Since the late 1950s, the emphasis in control design problems has been shifted from the design of one of many systems that work to the design of one optimal system in some meaningful sense.

As modern plants with many inputs and outputs become more and more complex, the description of a modern control system requires a large number of equations. Classical control theory, which deals only with single-input–single-output systems, becomes powerless for multiple-input–multiple-output systems. Since about 1960, because the availability of digital computers made possible time-domain analysis of complex systems, modern control theory, based on time-domain analysis and synthesis using state variables, has been developed to cope with the increased complexity of modern plants and the stringent requirements on accuracy, weight, and cost in military, space, and industrial applications.

During the years from 1960 to 1980, optimal control of both deterministic and stochastic systems, as well as adaptive and learning control of complex systems, were fully investigated. From 1980 to the present, developments in modern control theory centered around robust control, H_∞ control, and associated topics.

Now that digital computers have become cheaper and more compact, they are used as integral parts of control systems. Recent applications of modern control theory include such nonengineering systems as biological, biomedical, economic, and socioeconomic systems.

Definitions. Before we can discuss control systems, some basic terminologies must be defined.

Controlled Variable and Manipulated Variable. The *controlled* variable is the quantity or condition that is measured and controlled. The *manipulated* variable is the quantity or condition that is varied by the controller so as to affect the value of the controlled variable. Normally, the controlled variable is the output of the system. *Control* means measuring the value of the controlled variable of the system and applying the manipulated variable to the system to correct or limit deviation of the measured value from a desired value.

In studying control engineering, we need to define additional terms that are necessary to describe control systems.

Plants. A plant may be a piece of equipment, perhaps just a set of machine parts functioning together, the purpose of which is to perform a particular operation. In this book, we shall call any physical object to be controlled (such as a mechanical device, a heating furnace, a chemical reactor, or a spacecraft) a plant.

PETITIONER'S EXHIBIT 1002
US PATENT NO. 6,581,565
Page 9801

Processes. The *Merriam–Webster Dictionary* defines a process to be a natural, progressively continuing operation or development marked by a series of gradual changes that succeed one another in a relatively fixed way and lead toward a particular result or end; or an artificial or voluntary, progressively continuing operation that consists of a series of controlled actions or movements systematically directed toward a particular result or end. In this book we shall call any operation to be controlled a *process*. Examples are chemical, economic, and biological processes.

Systems. A system is a combination of components that act together and perform a certain objective. A system is not limited to physical ones. The concept of the system can be applied to abstract, dynamic phenomena such as those encountered in economics. The word system should, therefore, be interpreted to imply physical, biological, economic, and the like, systems.

Disturbances. A disturbance is a signal that tends to adversely affect the value of the output of a system. If a disturbance is generated within the system, it is called *internal*, while an *external* disturbance is generated outside the system and is an input.

Feedback Control. Feedback control refers to an operation that, in the presence of disturbances, tends to reduce the difference between the output of a system and some reference input and does so on the basis of this difference. Here only unpredictable disturbances are so specified, since predictable or known disturbances can always be compensated for within the system.

1–2 EXAMPLES OF CONTROL SYSTEMS

In this section we shall present several examples of control systems.

Speed Control System. The basic principle of a Watt's speed governor for an engine is illustrated in the schematic diagram of Figure 1–1. The amount of fuel admitted

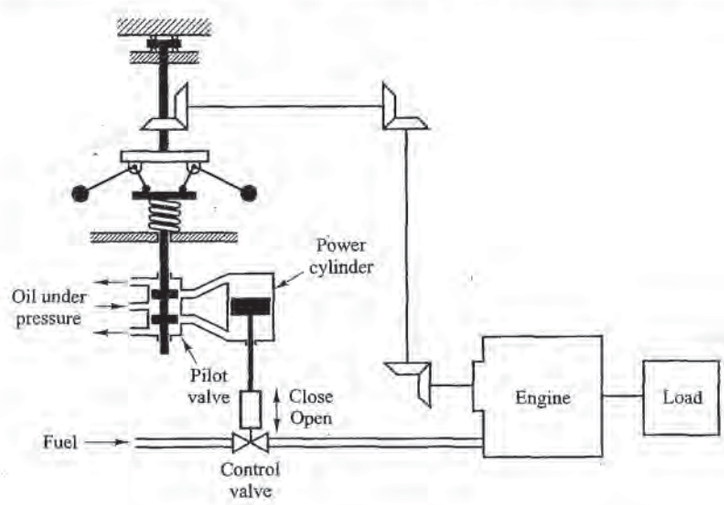

Figure 1–1 Speed control system.

PETITIONER'S EXHIBIT 1002
US PATENT NO. 6,581,565
Page 9802

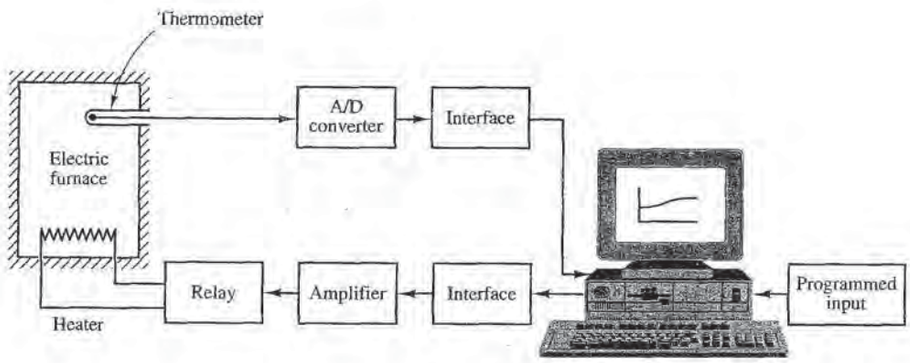

Figure 1–2
Temperature control system.

to the engine is adjusted according to the difference between the desired and the actual engine speeds.

The sequence of actions may be stated as follows: The speed governor is adjusted such that, at the desired speed, no pressured oil will flow into either side of the power cylinder. If the actual speed drops below the desired value due to disturbance, then the decrease in the centrifugal force of the speed governor causes the control valve to move downward, supplying more fuel, and the speed of the engine increases until the desired value is reached. On the other hand, if the speed of the engine increases above the desired value, then the increase in the centrifugal force of the governor causes the control valve to move upward. This decreases the supply of fuel, and the speed of the engine decreases until the desired value is reached.

In this speed control system, the plant (controlled system) is the engine and the controlled variable is the speed of the engine. The difference between the desired speed and the actual speed is the error signal. The control signal (the amount of fuel) to be applied to the plant (engine) is the actuating signal. The external input to disturb the controlled variable is the disturbance. An unexpected change in the load is a disturbance.

Temperature Control System. Figure 1–2 shows a schematic diagram of temperature control of an electric furnace. The temperature in the electric furnace is measured by a thermometer, which is an analog device. The analog temperature is converted to a digital temperature by an A/D converter. The digital temperature is fed to a controller through an interface. This digital temperature is compared with the programmed input temperature, and if there is any discrepancy (error), the controller sends out a signal to the heater, through an interface, amplifier, and relay, to bring the furnace temperature to a desired value.

EXAMPLE 1–1 Consider the temperature control of the passenger compartment of a car. The desired temperature (converted to a voltage) is the input to the controller. The actual temperature of the passenger compartment must be converted to a voltage through a sensor and fed back to the controller for comparison with the input.

Figure 1–3 is a functional block diagram of temperature control of the passenger compartment of a car. Note that the ambient temperature and radiation heat transfer from the sun, which are not constant while the car is driven, act as disturbances.

PETITIONER'S EXHIBIT 1002
US PATENT NO. 6,581,565
Page 9803

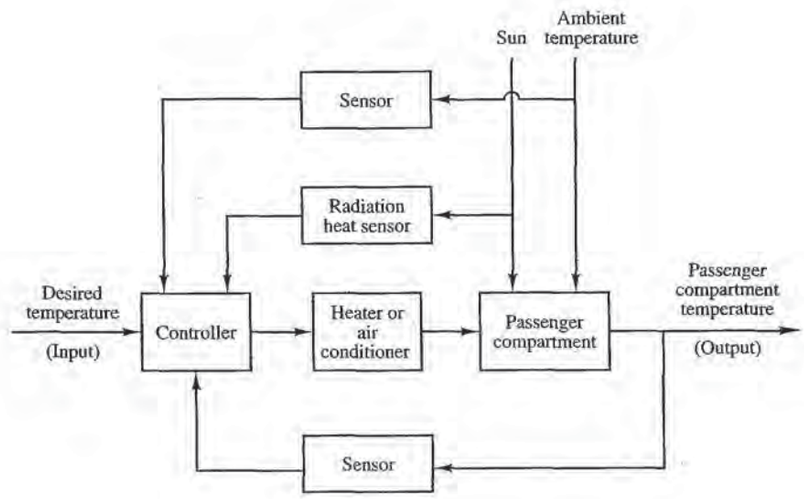

Figure 1–3
Temperature control of passenger compartment of a car.

The temperature of the passenger compartment differs considerably depending on the place where it is measured. Instead of using multiple sensors for temperature measurement and averaging the measured values, it is economical to install a small suction blower at the place where passengers normally sense the temperature. The temperature of the air from the suction blower is an indication of the passenger compartment temperature and is considered the output of the system.

The controller receives the input signal, output signal, and signals from sensors from disturbance sources. The controller sends out an optimal control signal to the air conditioner or heater to control the amount of cooling air or warm air so that the passenger compartment temperature is about the desired temperature.

Business Systems. A business system may consist of many groups. Each task assigned to a group will represent a dynamic element of the system. Feedback methods of reporting the accomplishments of each group must be established in such a system for proper operation. The cross-coupling between functional groups must be made a minimum in order to reduce undesirable delay times in the system. The smaller this cross-coupling, the smoother the flow of work signals and materials will be.

A business system is a closed-loop system. A good design will reduce the managerial control required. Note that disturbances in this system are the lack of personnel or materials, interruption of communication, human errors, and the like.

The establishment of a well-founded estimating system based on statistics is mandatory to proper management. Note that it is a well-known fact that the performance of such a system can be improved by the use of lead time, or *anticipation*.

To apply control theory to improve the performance of such a system, we must represent the dynamic characteristic of the component groups of the system by a relatively simple set of equations.

Although it is certainly a difficult problem to derive mathematical representations of the component groups, the application of optimization techniques to business systems significantly improves the performance of the business system.

PETITIONER'S EXHIBIT 1002
US PATENT NO. 6,581,565
Page 9804

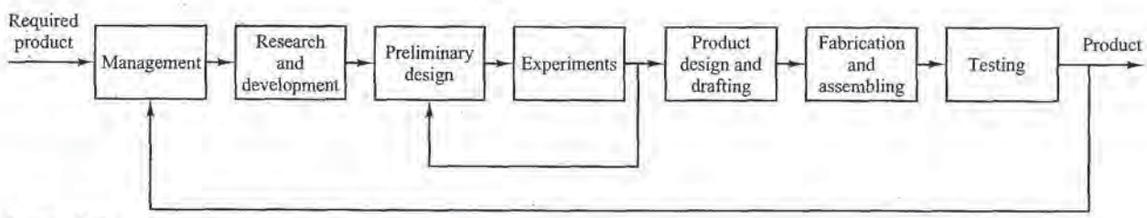

Figure 1–4
Block diagram of an engineering organizational system.

EXAMPLE 1–2 An engineering organizational system is composed of major groups such as management, research and development, preliminary design, experiments, product design and drafting, fabrication and assembling, and testing. These groups are interconnected to make up the whole operation.

Such a system may be analyzed by reducing it to the most elementary set of components necessary that can provide the analytical detail required and by representing the dynamic characteristics of each component by a set of simple equations. (The dynamic performance of such a system may be determined from the relation between progressive accomplishment and time.) Draw a functional block diagram showing an engineering organizational system.

A functional block diagram can be drawn by using blocks to represent the functional activities and interconnecting signal lines to represent the information or product output of the system operation. A possible block diagram is shown in Figure 1–4.

1–3 CLOSED-LOOP CONTROL VERSUS OPEN-LOOP CONTROL

Feedback Control Systems. A system that maintains a prescribed relationship between the output and the reference input by comparing them and using the difference as a means of control is called a *feedback control system.* An example would be a room-temperature control system. By measuring the actual room temperature and comparing it with the reference temperature (desired temperature), the thermostat turns the heating or cooling equipment on or off in such a way as to ensure that the room temperature remains at a comfortable level regardless of outside conditions.

Feedback control systems are not limited to engineering but can be found in various nonengineering fields as well. The human body, for instance, is a highly advanced feedback control system. Both body temperature and blood pressure are kept constant by means of physiological feedback. In fact, feedback performs a vital function: It makes the human body relatively insensitive to external disturbances, thus enabling it to function properly in a changing environment.

Closed-Loop Control Systems. Feedback control systems are often referred to as *closed-loop control* systems. In practice, the terms feedback control and closed-loop control are used interchangeably. In a closed-loop control system the actuating error signal, which is the difference between the input signal and the feedback signal (which may be the output signal itself or a function of the output signal and its derivatives and/or integrals), is fed to the controller so as to reduce the error and bring the output of the system to a desired value. The term closed-loop control always implies the use of feedback control action in order to reduce system error.

Open-Loop Control Systems. Those systems in which the output has no effect on the control action are called *open-loop control systems.* In other words, in an open-

PETITIONER'S EXHIBIT 1002
US PATENT NO. 6,581,565
Page 9805

loop control system the output is neither measured nor fed back for comparison with the input. One practical example is a washing machine. Soaking, washing, and rinsing in the washer operate on a time basis. The machine does not measure the output signal, that is, the cleanliness of the clothes.

In any open-loop control system the output is not compared with the reference input. Thus, to each reference input there corresponds a fixed operating condition; as a result, the accuracy of the system depends on calibration. In the presence of disturbances, an open-loop control system will not perform the desired task. Open-loop control can be used, in practice, only if the relationship between the input and output is known and if there are neither internal nor external disturbances. Clearly, such systems are not feedback control systems. Note that any control system that operates on a time basis is open loop. For instance, traffic control by means of signals operated on a time basis is another example of open-loop control.

Closed-Loop versus Open-Loop Control Systems. An advantage of the closed-loop control system is the fact that the use of feedback makes the system response relatively insensitive to external disturbances and internal variations in system parameters. It is thus possible to use relatively inaccurate and inexpensive components to obtain the accurate control of a given plant, whereas doing so is impossible in the open-loop case.

From the point of view of stability, the open-loop control system is easier to build because system stability is not a major problem. On the other hand, stability is a major problem in the closed-loop control system, which may tend to overcorrect errors and thereby can cause oscillations of constant or changing amplitude.

It should be emphasized that for systems in which the inputs are known ahead of time and in which there are no disturbances it is advisable to use open-loop control. Closed-loop control systems have advantages only when unpredictable disturbances and/or unpredictable variations in system components are present. Note that the output power rating partially determines the cost, weight, and size of a control system. The number of components used in a closed-loop control system is more than that for a corresponding open-loop control system. Thus, the closed-loop control system is generally higher in cost and power. To decrease the required power of a system, open-loop control may be used where applicable. A proper combination of open-loop and closed-loop controls is usually less expensive and will give satisfactory overall system performance.

EXAMPLE 1–3 Most analyses and designs of control systems presented in this book are concerned with closed-loop control systems. Under certain circumstances (such as where no disturbances exist or the output is hard to measure) open-loop control systems may be desired. Therefore, it is worthwhile to summarize the advantages and disadvantages of using open-loop control systems.

The major advantages of open-loop control systems are as follows:

1. Simple construction and ease of maintenance.
2. Less expensive than a corresponding closed-loop system.
3. There is no stability problem.
4. Convenient when output is hard to measure or measuring the output precisely is economically not feasible. (For example, in the washer system, it would be quite expensive to provide a device to measure the quality of the washer's output, cleanliness of the clothes.)

PETITIONER'S EXHIBIT 1002
US PATENT NO. 6,581,565
Page 9806

The major disadvantages of open-loop control systems are as follows:

1. Disturbances and changes in calibration cause errors, and the output may be different from what is desired.
2. To maintain the required quality in the output, recalibration is necessary from time to time.

1–4 OUTLINE OF THE BOOK

We briefly describe here the organization and contents of the book.

Chapter 1 has given introductory materials on control systems. Chapter 2 presents basic Laplace transform theory necessary for understanding the control theory presented in this book. Chapter 3 deals with mathematical modeling of dynamic systems in terms of transfer functions and state-space equations. It discusses mathematical modeling of mechanical systems and electrical and electronic systems. This chapter also includes the signal flow graphs and linearization of nonlinear mathematical models. Chapter 4 treats mathematical modeling of liquid-level systems, pneumatic systems, hydraulic systems, and thermal systems. Chapter 5 treats transient-response analyses of first- and second-order systems as well as higher-order systems. Detailed discussions of transient-response analysis with MATLAB are presented. Routh's stability criterion and steady-state errors in unity-feedback control systems are also presented in this chapter.

Chapter 6 gives a root-locus analysis of control systems. General rules for constructing root loci are presented. Detailed discussions for plotting root loci with MATLAB are included. Chapter 7 deals with the design of control systems via the root-locus method. Specifically, root-locus approaches to the design of lead compensators, lag compensators, and lag–lead compensators are discussed in detail. Chapter 8 gives the frequency-response analysis of control systems. Bode diagrams, polar plots, Nyquist stability criterion, and closed-loop frequency response are discussed. Chapter 9 treats control systems design via the frequency-response approach. Here Bode diagrams are used to design lead compensators, lag compensators, and lag–lead compensators. Chapter 10 discusses the basic and modified PID controls. In this chapter two-degrees-of-freedom control systems are introduced. We design high-performance control systems using two-degrees-of-freedom configuration. MATLAB is extensively used in the design of such systems.

Chapter 11 presents basic materials for the state-space analysis of control systems. The solution of the time-invariant state equation is derived and concepts of controllability and observability are discussed. Chapter 12 treats the design of control systems in state space. This chapter begins with the pole-placement problems, followed by the design of state observers, and the design of regulator systems with observers and control systems with observers. Finally, quadratic optimal control is discussed.

PETITIONER'S EXHIBIT 1002
US PATENT NO. 6,581,565
Page 9807

2

The Laplace Transform*

2–1 INTRODUCTION

The Laplace transform method is an operational method that can be used advantageously for solving linear differential equations. By use of Laplace transforms, we can convert many common functions, such as sinusoidal functions, damped sinusoidal functions, and exponential functions, into algebraic functions of a complex variable s. Operations such as differentiation and integration can be replaced by algebraic operations in the complex plane. Thus, a linear differential equation can be transformed into an algebraic equation in a complex variable s. If the algebraic equation in s is solved for the dependent variable, then the solution of the differential equation (the inverse Laplace transform of the dependent variable) may be found by use of a Laplace transform table or by use of the partial-fraction expansion technique, which is presented in Section 2–5 and 2–6.

An advantage of the Laplace transform method is that it allows the use of graphical techniques for predicting the system performance without actually solving system differential equations. Another advantage of the Laplace transform method is that, when we solve the differential equation, both the transient component and steady-state component of the solution can be obtained simultaneously.

Outline of the Chapter. Section 2–1 presents introductory remarks. Section 2–2 briefly reviews complex variables and complex functions. Section 2–3 derives Laplace

*This chapter may be skipped if the student is already familiar with Laplace transforms.

PETITIONER'S EXHIBIT 1002
US PATENT NO. 6,581,565
Page 9808

transforms of time functions that are frequently used in control engineering. Section 2–4 presents useful theorems of Laplace transforms, and Section 2–5 treats the inverse Laplace transformation using the partial-fraction expansion of $B(s)/A(s)$, where $A(s)$ and $B(s)$ are polynomials in s. Section 2–6 presents computational methods with MATLAB to obtain the partial-fraction expansion of $B(s)/A(s)$, as well as the zeros and poles of $B(s)/A(s)$. Finally, Section 2–7 deals with solutions of linear time-invariant differential equations by the Laplace transform approach.

2–2 REVIEW OF COMPLEX VARIABLES AND COMPLEX FUNCTIONS

Before we present the Laplace transformation, we shall review the complex variable and complex function. We shall also review Euler's theorem, which relates the sinusoidal functions to exponential functions.

Complex Variable. A complex number has a real part and an imaginary part, both of which are constant. If the real part and/or imaginary part are variables, a complex quantity is called a *complex variable*. In the Laplace transformation we use the notation s as a complex variable; that is,

$$s = \sigma + j\omega$$

where σ is the real part and ω is the imaginary part.

Complex Function. A complex function $G(s)$, a function of s, has a real part and an imaginary part or

$$G(s) = G_x + jG_y$$

where G_x and G_y are real quantities. The magnitude of $G(s)$ is $\sqrt{G_x^2 + G_y^2}$, and the angle θ of $G(s)$ is $\tan^{-1}(G_y/G_x)$. The angle is measured counterclockwise from the positive real axis. The complex conjugate of $G(s)$ is $\bar{G}(s) = G_x - jG_y$.

Complex functions commonly encountered in linear control systems analysis are single-valued functions of s and are uniquely determined for a given value of s.

A complex function $G(s)$ is said to be *analytic* in a region if $G(s)$ and all its derivatives exist in that region. The derivative of an analytic function $G(s)$ is given by

$$\frac{d}{ds}G(s) = \lim_{\Delta s \to 0} \frac{G(s + \Delta s) - G(s)}{\Delta s} = \lim_{\Delta s \to 0} \frac{\Delta G}{\Delta s}$$

Since $\Delta s = \Delta\sigma + j\Delta\omega$, Δs can approach zero along an infinite number of different paths. It can be shown, but is stated without a proof here, that if the derivatives taken along two particular paths, that is, $\Delta s = \Delta\sigma$ and $\Delta s = j\Delta\omega$, are equal, then the derivative is unique for any other path $\Delta s = \Delta\sigma + j\Delta\omega$ and so the derivative exists.

For a particular path $\Delta s = \Delta\sigma$ (which means that the path is parallel to the real axis).

$$\frac{d}{ds}G(s) = \lim_{\Delta\sigma \to 0}\left(\frac{\Delta G_x}{\Delta\sigma} + j\frac{\Delta G_y}{\Delta\sigma}\right) = \frac{\partial G_x}{\partial\sigma} + j\frac{\partial G_y}{\partial\sigma}$$

PETITIONER'S EXHIBIT 1002
US PATENT NO. 6,581,565
Page 9809

For another particular path $\Delta s = j\Delta\omega$ (which means that the path is parallel to the imaginary axis).

$$\frac{d}{ds}G(s) = \lim_{j\Delta\omega\to 0}\left(\frac{\Delta G_x}{j\Delta\omega} + j\frac{\Delta G_y}{j\Delta\omega}\right) = -j\frac{\partial G_x}{\partial\omega} + \frac{\Delta G_y}{\partial\omega}$$

If these two values of the derivative are equal,

$$\frac{\partial G_x}{\partial\sigma} + j\frac{\partial G_y}{\partial\sigma} = \frac{\partial G_y}{\partial\omega} - j\frac{\partial G_x}{\partial\omega}$$

or if the following two conditions

$$\frac{\partial G_x}{\partial\sigma} = \frac{\partial G_y}{\partial\omega} \quad \text{and} \quad \frac{\partial G_y}{\partial\sigma} = -\frac{\partial G_x}{\partial\omega}$$

are satisfied, then the derivative $dG(s)/ds$ is uniquely determined. These two conditions are known as the Cauchy–Riemann conditions. If these conditions are satisfied, the function $G(s)$ is analytic.

As an example, consider the following $G(s)$:

$$G(s) = \frac{1}{s+1}$$

Then

$$G(\sigma + j\omega) = \frac{1}{\sigma + j\omega + 1} = G_x + jG_y$$

where

$$G_x = \frac{\sigma + 1}{(\sigma+1)^2 + \omega^2} \quad \text{and} \quad G_y = \frac{-\omega}{(\sigma+1)^2 + \omega^2}$$

It can be seen that, except at $s = -1$ (that is, $\sigma = -1$, $\omega = 0$), $G(s)$ satisfies the Cauchy–Riemann conditions:

$$\frac{\partial G_x}{\partial\sigma} = \frac{\partial G_y}{\partial\omega} = \frac{\omega^2 - (\sigma+1)^2}{[(\sigma+1)^2 + \omega^2]^2}$$

$$\frac{\partial G_y}{\partial\sigma} = -\frac{\partial G_x}{\partial\omega} = \frac{2\omega(\sigma+1)}{[(\sigma+1)^2 + \omega^2]^2}$$

Hence $G(s) = 1/(s+1)$ is analytic in the entire s plane except at $s = -1$. The derivative $dG(s)/ds$, except at $s = 1$, is found to be

$$\frac{d}{ds}G(s) = \frac{\partial G_x}{\partial\sigma} + j\frac{\partial G_y}{\partial\sigma} = \frac{\partial G_y}{\partial\omega} - j\frac{\partial G_x}{d\omega}$$

$$= -\frac{1}{(\sigma + j\omega + 1)^2} = -\frac{1}{(s+1)^2}$$

Note that the derivative of an analytic function can be obtained simply by differentiating $G(s)$ with respect to s. In this example,

$$\frac{d}{ds}\left(\frac{1}{s+1}\right) = -\frac{1}{(s+1)^2}$$

PETITIONER'S EXHIBIT 1002
US PATENT NO. 6,581,565
Page 9810

Points in the s plane at which the function $G(s)$ is analytic are called *ordinary* points, while points in the s plane at which the function $G(s)$ is not analytic are called *singular* points. Singular points at which the function $G(s)$ or its derivatives approach infinity are called *poles*. Singular points at which the function $G(s)$ equals zero are called *zeros*.

If $G(s)$ approaches infinity as s approaches $-p$ and if the function

$$G(s)(s+p)^n, \qquad \text{for } n = 1, 2, 3, \ldots$$

has a finite, nonzero value at $s = -p$, then $s = -p$ is called a pole of order n. If $n = 1$, the pole is called a simple pole. If $n = 2, 3, \ldots$, the pole is called a second-order pole, a third-order pole, and so on.

To illustrate, consider the complex function

$$G(s) = \frac{K(s+2)(s+10)}{s(s+1)(s+5)(s+15)^2}$$

$G(s)$ has zeros at $s = -2$, $s = -10$, simple poles at $s = 0$, $s = -1$, $s = -5$, and a double pole (multiple pole of order 2) at $s = -15$. Note that $G(s)$ becomes zero at $s = \infty$. Since for large values of s

$$G(s) \doteq \frac{K}{s^3}$$

$G(s)$ possesses a triple zero (multiple zero of order 3) at $s = \infty$. If points at infinity are included, $G(s)$ has the same number of poles as zeros. To summarize, $G(s)$ has five zeros ($s = -2$, $s = -10$, $s = \infty$, $s = \infty$, $s = \infty$) and five poles ($s = 0$, $s = -1$, $s = -5$, $s = -15$, $s = -15$).

Euler's Theorem. The power series expansions of $\cos\theta$ and $\sin\theta$ are, respectively,

$$\cos\theta = 1 - \frac{\theta^2}{2!} + \frac{\theta^4}{4!} - \frac{\theta^6}{6!} + \cdots$$

$$\sin\theta = \theta - \frac{\theta^3}{3!} + \frac{\theta^5}{5!} - \frac{\theta^7}{7!} + \cdots$$

And so

$$\cos\theta + j\sin\theta = 1 + (j\theta) + \frac{(j\theta)^2}{2!} + \frac{(j\theta)^3}{3!} + \frac{(j\theta)^4}{4!} + \cdots$$

Since

$$e^x = 1 + x + \frac{x^2}{2!} + \frac{x^3}{3!} + \cdots$$

we see that

$$\cos\theta + j\sin\theta = e^{j\theta} \tag{2–1}$$

This is known as *Euler's theorem*.

PETITIONER'S EXHIBIT 1002
US PATENT NO. 6,581,565
Page 9811

By using Euler's theorem, we can express sine and cosine in terms of an exponential function. Noting that $e^{-j\theta}$ is the complex conjugate of $e^{j\theta}$ and that

$$e^{j\theta} = \cos\theta + j\sin\theta$$

$$e^{-j\theta} = \cos\theta - j\sin\theta$$

we find, after adding or subtracting these two equations, that

$$\cos\theta = \frac{1}{2}\left(e^{j\theta} + e^{-j\theta}\right) \tag{2–2}$$

$$\sin\theta = \frac{1}{2j}\left(e^{j\theta} - e^{-j\theta}\right) \tag{2–3}$$

2–3 LAPLACE TRANSFORMATION

We shall first present a definition of the Laplace transformation and a brief discussion of the condition for the existence of the Laplace transform and then provide examples for illustrating the derivation of Laplace transforms of several common functions.

Let us define

$f(t)$ = a function of time t such that $f(t) = 0$ for $t < 0$

s = a complex variable

$\mathscr{L}$ = an operational symbol indicating that the quantity that it prefixes is to be transformed by the Laplace integral $\int_0^\infty e^{-st}\,dt$

$F(s)$ = Laplace transform of $f(t)$

Then the Laplace transform of $f(t)$ is given by

$$\mathscr{L}[f(t)] = F(s) = \int_0^\infty e^{-st}\,dt[f(t)] = \int_0^\infty f(t)e^{-st}\,dt$$

The reverse process of finding the time function $f(t)$ from the Laplace transform $F(s)$ is called the *inverse Laplace transformation*. The notation for the inverse Laplace transformation is $\mathscr{L}^{-1}$, and the inverse Laplace transform can be found from $F(s)$ by the following inversion integral:

$$\mathscr{L}^{-1}[F(s)] = f(t) = \frac{1}{2\pi j}\int_{c-j\infty}^{c+j\infty} F(s)e^{st}\,ds, \qquad \text{for } t > 0 \tag{2–4}$$

where c, the abscissa of convergence, is a real constant and is chosen larger than the real parts of all singular points of $F(s)$. Thus, the path of integration is parallel to the $j\omega$ axis and is displaced by the amount c from it. This path of integration is to the right of all singular points.

Evaluating the inversion integral appears complicated. In practice, we seldom use this integral for finding $f(t)$. There are simpler methods for finding $f(t)$. We shall discuss such simpler methods in Sections 2–5 and 2–6.

It is noted that in this book the time function $f(t)$ is always assumed to be zero for negative time; that is,

$$f(t) = 0, \qquad \text{for } t < 0$$

PETITIONER'S EXHIBIT 1002
US PATENT NO. 6,581,565
Page 9812

Existence of Laplace Transform. The Laplace transform of a function $f(t)$ exists if the Laplace integral converges. The integral will converge if $f(t)$ is sectionally continuous in every finite interval in the range $t > 0$ and if it is of exponential order as t approaches infinity. A function $f(t)$ is said to be of exponential order if a real, positive constant σ exists such that the function

$$e^{-\sigma t}|f(t)|$$

approaches zero as t approaches infinity. If the limit of the function $e^{-\sigma t}|f(t)|$ approaches zero for σ greater than σ_c and the limit approaches infinity for σ less than σ_c, the value σ_c is called the *abscissa of convergence.*

For the function $f(t) = Ae^{-\alpha t}$

$$\lim_{t \to \infty} e^{-\sigma t}|Ae^{-\alpha t}|$$

approaches zero if $\sigma > -\alpha$. The abscissa of convergence in this case is $\sigma_c = -\alpha$. The integral $\int_0^\infty f(t)e^{-st}\,dt$ converges only if σ, the real part of s, is greater than the abscissa of convergence σ_c. Thus the operator s must be chosen as a constant such that this integral converges.

In terms of the poles of the function $F(s)$, the abscissa of convergence σ_c corresponds to the real part of the pole located farthest to the right in the s plane. For example, for the following function $F(s)$,

$$F(s) = \frac{K(s+3)}{(s+1)(s+2)}$$

the abscissa of convergence σ_c is equal to -1. It can be seen that for such functions as t, $\sin \omega t$, and $t \sin \omega t$ the abscissa of convergence is equal to zero. For functions like e^{-ct}, te^{-ct}, $e^{-ct} \sin \omega t$, and so on, the abscissa of convergence is equal $-c$. For functions that increase faster than the exponential function, however, it is impossible to find suitable values of the abcissa of convergence. Therefore, such functions as e^{t^2} and te^{t^2} do not possess Laplace transforms.

The reader should be cautioned that although e^{t^2} (for $0 \le t \le \infty$) does not possess a Laplace transform, the time function defined by

$$\begin{aligned} f(t) &= e^{t^2}, && \text{for } 0 \le t \le T < \infty \\ &= 0, && \text{for } t < 0, T < t \end{aligned}$$

does possess a Laplace transform since $f(t) = e^{t^2}$ for only a limited time interval $0 \le t \le T$ and not for $0 \le t \le \infty$. Such a signal can be physically generated. Note that the signals that we can physically generate always have corresponding Laplace transforms.

If a function $f(t)$ has a Laplace transform, then the Laplace transform of $Af(t)$, where A is a constant, is given by

$$\mathscr{L}[Af(t)] = A\mathscr{L}[f(t)]$$

This is obvious from the definition of the Laplace transform. Since Laplace transformation is a linear operation, if functions $f_1(t)$ and $f_2(t)$ have Laplace transforms, $F_1(s)$ and $F_1(s)$, respectively, then the Laplace transform of the function $\alpha f_1(t) + \beta f_2(t)$ is given by

$$\mathscr{L}[\alpha f_1(t) + \beta f_2(t)] = \alpha F_1(s) + \beta F_2(s)$$

In what follows, we derive Laplace transforms of a few commonly encountered functions.

PETITIONER'S EXHIBIT 1002
US PATENT NO. 6,581,565
Page 9813

Exponential Function. Consider the exponential function

$$f(t) = 0, \qquad \text{for } t < 0$$
$$= Ae^{-\alpha t}, \qquad \text{for } t \geq 0$$

where A and α are constants. The Laplace transform of this exponential function can be obtained as follows:

$$\mathscr{L}[Ae^{-\alpha t}] = \int_0^\infty Ae^{-\alpha t}e^{-st}\,dt = A\int_0^\infty e^{-(\alpha+s)t}\,dt = \frac{A}{s+\alpha}$$

It is seen that the exponential function produces a pole in the complex plane.

In deriving the Laplace transform of $f(t) = Ae^{-\alpha t}$, we required that the real part of s be greater than $-\alpha$ (the abscissa of convergence). A question may immediately arise as to whether or not the Laplace transform thus obtained is valid in the range where $\sigma < -\alpha$ in the s plane. To answer this question, we must resort to the theory of complex variables. In the theory of complex variables, there is a theorem known as the analytic extension theorem. It states that, if two analytic functions are equal for a finite length along any arc in a region in which both are analytic, then they are equal everywhere in the region. The arc of equality is usually the real axis or a portion of it. By using this theorem the form of $F(s)$ determined by an integration in which s is allowed to have any real positive value greater than the abscissa of convergence holds for any complex values of s at which $F(s)$ is analytic. Thus, although we require the real part of s to be greater than the abscissa of convergence to make the integral $\int_0^\infty f(t)e^{-st}\,dt$ absolutely convergent, once the Laplace transform $F(s)$ is obtained, $F(s)$ can be considered valid throughout the entire s plane except at the poles of $F(s)$.

Step Function. Consider the step function

$$f(t) = 0, \qquad \text{for } t < 0$$
$$= A, \qquad \text{for } t > 0$$

where A is a constant. Note that it is a special case of the exponential function $Ae^{-\alpha t}$, where $\alpha = 0$. The step function is undefined at $t = 0$. Its Laplace transform is given by

$$\mathscr{L}[A] = \int_0^\infty Ae^{-st}\,dt = \frac{A}{s}$$

In performing this integration, we assumed that the real part of s was greater than zero (the abscissa of convergence) and therefore that $\lim_{t\to\infty} e^{-st}$ was zero. As stated earlier, the Laplace transform thus obtained is valid in the entire s plane except at the pole $s = 0$.

The step function whose height is unity is called *unit-step* function. The unit-step function that occurs at $t = t_0$ is frequently written as $1(t - t_0)$. The step function of height A that occurs at $t = 0$ can then be written as $f(t) = A1(t)$. The Laplace transform of the unit-step function, which is defined by

$$1(t) = 0, \qquad \text{for } t < 0$$
$$= 1, \qquad \text{for } t > 0$$

PETITIONER'S EXHIBIT 1002
US PATENT NO. 6,581,565
Page 9814

is $1/s$, or

$$\mathscr{L}[1(t)] = \frac{1}{s}$$

Physically, a step function occurring at $t = 0$ corresponds to a constant signal suddenly applied to the system at time t equals zero.

Ramp Function. Consider the ramp function

$$\begin{aligned} f(t) &= 0, && \text{for } t < 0 \\ &= At, && \text{for } t \geq 0 \end{aligned}$$

where A is a constant. The Laplace transform of this ramp function is obtained as

$$\begin{aligned} \mathscr{L}[At] &= \int_0^\infty Ate^{-st}\,dt = At\frac{e^{-st}}{-s}\bigg|_0^\infty - \int_0^\infty \frac{Ae^{-st}}{-s}\,dt \\ &= \frac{A}{s}\int_0^\infty e^{-st}\,dt = \frac{A}{s^2} \end{aligned}$$

Sinusoidal Function. The Laplace transform of the sinusoidal function

$$\begin{aligned} f(t) &= 0, && \text{for } t < 0 \\ &= A\sin\omega t, && \text{for } t \geq 0 \end{aligned}$$

where A and ω are constants, is obtained as follows. Referring to Equation (2–3), $\sin\omega t$ can be written

$$\sin\omega t = \frac{1}{2j}\left(e^{j\omega t} - e^{-j\omega t}\right)$$

Hence

$$\begin{aligned} \mathscr{L}[A\sin\omega t] &= \frac{A}{2j}\int_0^\infty \left(e^{j\omega t} - e^{-j\omega t}\right)e^{-st}\,dt \\ &= \frac{A}{2j}\frac{1}{s - j\omega} - \frac{A}{2j}\frac{1}{s + j\omega} = \frac{A\omega}{s^2 + \omega^2} \end{aligned}$$

Similarly, the Laplace transform of $A\cos\omega t$ can be derived as follows:

$$\mathscr{L}[A\cos\omega t] = \frac{As}{s^2 + \omega^2}$$

Comments. The Laplace transform of any Laplace transformable function $f(t)$ can be found by multiplying $f(t)$ by e^{-st} and then integrating the product from $t = 0$ to $t = \infty$. Once we know the method of obtaining the Laplace transform, however, it is not necessary to derive the Laplace transform of $f(t)$ each time. Laplace transform tables can conveniently be used to find the transform of a given function $f(t)$. Table 2–1 shows Laplace transforms of time functions that will frequently appear in linear control systems analysis.

PETITIONER'S EXHIBIT 1002
US PATENT NO. 6,581,565
Page 9815

Table 2–1 Laplace Transform Pairs

	$f(t)$	$F(s)$
1	Unit impulse $\delta(t)$	1
2	Unit step $1(t)$	$\frac{1}{s}$
3	t	$\frac{1}{s^2}$
4	$\frac{t^{n-1}}{(n-1)!} \quad (n = 1, 2, 3, \dots)$	$\frac{1}{s^n}$
5	$t^n \quad (n = 1, 2, 3, \dots)$	$\frac{n!}{s^{n+1}}$
6	e^{-at}	$\frac{1}{s+a}$
7	te^{-at}	$\frac{1}{(s+a)^2}$
8	$\frac{1}{(n-1)!} t^{n-1} e^{-at} \quad (n = 1, 2, 3, \dots)$	$\frac{1}{(s+a)^n}$
9	$t^n e^{-at} \quad (n = 1, 2, 3, \dots)$	$\frac{n!}{(s+a)^{n+1}}$
10	$\sin \omega t$	$\frac{\omega}{s^2 + \omega^2}$
11	$\cos \omega t$	$\frac{s}{s^2 + \omega^2}$
12	$\sinh \omega t$	$\frac{\omega}{s^2 - \omega^2}$
13	$\cosh \omega t$	$\frac{s}{s^2 - \omega^2}$
14	$\frac{1}{a}(1 - e^{-at})$	$\frac{1}{s(s+a)}$
15	$\frac{1}{b-a}(e^{-at} - e^{-bt})$	$\frac{1}{(s+a)(s+b)}$
16	$\frac{1}{b-a}(be^{-bt} - ae^{-at})$	$\frac{s}{(s+a)(s+b)}$
17	$\frac{1}{ab}\left[1 + \frac{1}{a-b}(be^{-at} - ae^{-bt})\right]$	$\frac{1}{s(s+a)(s+b)}$

(continues on next page)

PETITIONER'S EXHIBIT 1002
US PATENT NO. 6,581,565
Page 9816

Table 2–1 *(continued)*

18	$\frac{1}{a^2}(1 - e^{-at} - ate^{-at})$	$\frac{1}{s(s+a)^2}$
19	$\frac{1}{a^2}(at - 1 + e^{-at})$	$\frac{1}{s^2(s+a)}$
20	$e^{-at}\sin\omega t$	$\frac{\omega}{(s+a)^2+\omega^2}$
21	$e^{-at}\cos\omega t$	$\frac{s+a}{(s+a)^2+\omega^2}$
22	$\frac{\omega_n}{\sqrt{1-\zeta^2}}e^{-\zeta\omega_n t}\sin\omega_n\sqrt{1-\zeta^2}\,t \quad (0<\zeta<1)$	$\frac{\omega_n^2}{s^2+2\zeta\omega_n s+\omega_n^2}$
23	$-\frac{1}{\sqrt{1-\zeta^2}}e^{-\zeta\omega_n t}\sin(\omega_n\sqrt{1-\zeta^2}\,t-\phi)$ $\phi = \tan^{-1}\frac{\sqrt{1-\zeta^2}}{\zeta}$ $(0<\zeta<1,\ \ 0<\phi<\pi/2)$	$\frac{s}{s^2+2\zeta\omega_n s+\omega_n^2}$
24	$1-\frac{1}{\sqrt{1-\zeta^2}}e^{-\zeta\omega_n t}\sin(\omega_n\sqrt{1-\zeta^2}\,t+\phi)$ $\phi = \tan^{-1}\frac{\sqrt{1-\zeta^2}}{\zeta}$ $(0<\zeta<1,\ \ 0<\phi<\pi/2)$	$\frac{\omega_n^2}{s(s^2+2\zeta\omega_n s+\omega_n^2)}$
25	$1-\cos\omega t$	$\frac{\omega^2}{s(s^2+\omega^2)}$
26	$\omega t - \sin\omega t$	$\frac{\omega^3}{s^2(s^2+\omega^2)}$
27	$\sin\omega t - \omega t\cos\omega t$	$\frac{2\omega^3}{(s^2+\omega^2)^2}$
28	$\frac{1}{2\omega}t\sin\omega t$	$\frac{s}{(s^2+\omega^2)^2}$
29	$t\cos\omega t$	$\frac{s^2-\omega^2}{(s^2+\omega^2)^2}$
30	$\frac{1}{\omega_2^2-\omega_1^2}(\cos\omega_1 t - \cos\omega_2 t) \qquad (\omega_1^2 \neq \omega_2^2)$	$\frac{s}{(s^2+\omega_1^2)(s^2+\omega_2^2)}$
31	$\frac{1}{2\omega}(\sin\omega t + \omega t\cos\omega t)$	$\frac{s^2}{(s^2+\omega^2)^2}$

In the following discussion we present Laplace transforms of functions as well as theorems on the Laplace transformation that are useful in the study of linear control systems.

Translated Function. Let us obtain the Laplace transform of the translated function $f(t-\alpha)1(t-\alpha)$, where $\alpha \geq 0$. This function is zero for $t < \alpha$. The functions $f(t)1(t)$ and $f(t-\alpha)1(t-\alpha)$ are shown in Figure 2–1.

By definition, the Laplace transform of $f(t-\alpha)1(t-\alpha)$ is

$$\mathscr{L}[f(t-\alpha)1(t-\alpha)] = \int_0^\infty f(t-\alpha)1(t-\alpha)e^{-st}\,dt$$

By changing the independent variable from t to τ, where $\tau = t - \alpha$, we obtain

$$\int_0^\infty f(t-\alpha)1(t-\alpha)e^{-st}\,dt = \int_{-\alpha}^\infty f(\tau)1(\tau)e^{-s(\tau+\alpha)}\,d\tau$$

Since in this book we always assume that $f(t) = 0$ for $t < 0$, $f(\tau)1(\tau) = 0$ for $\tau < 0$. Hence we can change the lower limit of integration from $-\alpha$ to 0. Thus

$$\begin{aligned}\int_{-\alpha}^\infty f(\tau)1(\tau)e^{-s(\tau+\alpha)}\,d\tau &= \int_0^\infty \phi(\tau)1(\tau)e^{-s(\tau+\alpha)}\,d\tau \\ &= \int_0^\infty f(\tau)e^{-s\tau}e^{-\alpha s}\,d\tau \\ &= e^{-\alpha s}\int_0^\infty f(\tau)e^{-s\tau}\,d\tau = e^{-\alpha s}F(s)\end{aligned}$$

where

$$F(s) = \mathscr{L}[f(t)] = \int_0^\infty f(t)e^{-st}\,dt$$

And so

$$\mathscr{L}[f(t-\alpha)1(t-\alpha)] = e^{-\alpha s}F(s), \qquad \text{for } \alpha \geq 0$$

This last equation states that the translation of the time function $f(t)1(t)$ by α (where $\alpha \geq 0$) corresponds to the multiplication of the transform $F(s)$ by $e^{-\alpha s}$.

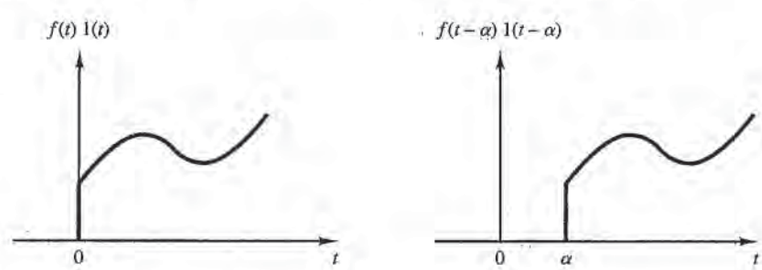

Figure 2–1
Function $f(t)1(t)$ and translated function $f(t-\alpha)1(t-\alpha)$.

Pulse Function. Consider the pulse function

$$f(t) = \frac{A}{t_0}, \qquad \text{for } 0 < t < t_0$$
$$= 0, \qquad \text{for } t < 0, t_0 < t$$

where A and t_0 are constants.

The pulse function here may be considered a step function of height A/t_0 that begins at $t = 0$ and that is superimposed by a negative step function of height A/t_0 beginning at $t = t_0$; that is,

$$f(t) = \frac{A}{t_0}1(t) - \frac{A}{t_0}1(t - t_0)$$

Then the Laplace transform of $f(t)$ is obtained as

$$\begin{aligned}\mathscr{L}[f(t)] &= \mathscr{L}\left[\frac{A}{t_0}1(t)\right] - \mathscr{L}\left[\frac{A}{t_0}1(t - t_0)\right] \\ &= \frac{A}{t_0 s} - \frac{A}{t_0 s}e^{-st_0} \\ &= \frac{A}{t_0 s}(1 - e^{-st_0}) \qquad (2\text{–}5)\end{aligned}$$

Impulse Function. The impulse function is a special limiting case of the pulse function. Consider the impulse function

$$g(t) = \lim_{t_0 \to 0} \frac{A}{t_0}, \qquad \text{for } 0 < t < t_0$$
$$= 0, \qquad \text{for } t < 0, t_0 < t$$

Since the height of the impulse function is A/t_0 and the duration is t_0, the area under the impulse is equal to A. As the duration t_0 approaches zero, the height A/t_0 approaches infinity, but the area under the impulse remains equal to A. Note that the magnitude of the impulse is measured by its area.

Referring to Equation (2–5), the Laplace transform of this impulse function is shown to be

$$\begin{aligned}\mathscr{L}[g(t)] &= \lim_{t_0 \to 0}\left[\frac{A}{t_0 s}(1 - e^{-st_0})\right] \\ &= \lim_{t_0 \to 0} \frac{\dfrac{d}{dt_0}[A(1 - e^{-st_0})]}{\dfrac{d}{dt_0}(t_0 s)} = \frac{As}{s} = A\end{aligned}$$

Thus the Laplace transform of the impulse function is equal to the area under the impulse.

PETITIONER'S EXHIBIT 1002
US PATENT NO. 6,581,565
Page 9819

The impulse function whose area is equal to unity is called the *unit-impulse function* or the *Dirac delta function*. The unit-impulse function occurring at $t = t_0$ is usually denoted by $\delta(t - t_0)$. $\delta(t - t_0)$ satisfies the following:

$$\delta(t - t_0) = 0, \qquad \text{for } t \neq t_0$$

$$\delta(t - t_0) = \infty, \qquad \text{for } t = t_0$$

$$\int_{-\infty}^{\infty} \delta(t - t_0)\, dt = 1$$

It should be mentioned that an impulse that has an infinite magnitude and zero duration is mathematical fiction and does not occur in physical systems. If, however, the magnitude of a pulse input to a system is very large and its duration is very short compared to the system time constants, then we can approximate the pulse input by an impulse function. For instance, if a force or torque input $f(t)$ is applied to a system for a very short time duration, $0 < t < t_0$, where the magnitude of $f(t)$ is sufficiently large so that the integral $\int_0^{t_0} f(t)dt$ is not negligible, then this input can be considered an impulse input. (Note that when we describe the impulse input the area or magnitude of the impulse is most important, but the exact shape of the impulse is usually immaterial.) The impulse input supplies energy to the system in an infinitesimal time.

The concept of the impulse function is quite useful in differentiating discontinuous functions. The unit-impulse function $\delta(t - t_0)$ can be considered the derivative of the unit-step function $1(t - t_0)$ at the point of discontinuity $t = t_0$ or

$$\delta(t - t_0) = \frac{d}{dt} 1(t - t_0)$$

Conversely, if the unit-impulse function $\delta(t - t_0)$ is integrated, the result is the unit-step function $1(t - t_0)$. With the concept of the impulse function we can differentiate a function containing discontinuities, giving impulses, the magnitudes of which are equal to the magnitude of each corresponding discontinuity.

Multiplication of $f(t)$ by $e^{-\alpha t}$. If $f(t)$ is Laplace transformable, its Laplace transform being $F(s)$, then the Laplace transform of $e^{-\alpha t} f(t)$ is obtained as

$$\mathcal{L}[e^{-\alpha t} f(t)] = \int_0^{\infty} e^{-\alpha t} f(t) e^{-st}\, dt = F(s + \alpha) \tag{2–6}$$

We see that the multiplication of $f(t)$ by $e^{-\alpha t}$ has the effect of replacing s by $(s + \alpha)$ in the Laplace transform. Conversely, changing s to $(s + \alpha)$ is equivalent to multiplying $f(t)$ by $e^{-\alpha t}$. (Note that α may be real or complex.)

The relationship given by Equation (2–6) is useful in finding the Laplace transforms of such functions as $e^{-\alpha t} \sin \omega t$ and $e^{-\alpha t} \cos \omega t$. For instance, since

$$\mathcal{L}[\sin \omega t] = \frac{\omega}{s^2 + \omega^2} = F(s), \qquad \mathcal{L}[\cos \omega] = \frac{s}{s^2 + \omega^2} = G(s)$$

PETITIONER'S EXHIBIT 1002
US PATENT NO. 6,581,565
Page 9820

it follows from Equation (2–6) that the Laplace transforms of $e^{-\alpha t}\sin\omega t$ and $e^{-\alpha t}\cos\omega t$ are given, respectively, by

$$\mathcal{L}[e^{-\alpha t}\sin\omega t] = F(s+\alpha) = \frac{\omega}{(s+\alpha)^2+\omega^2}$$

$$\mathcal{L}[e^{-\alpha t}\cos\omega t] = G(s+\alpha) = \frac{s+\alpha}{(s+\alpha)^2+\omega^2}$$

Change of Time Scale. In analyzing physical systems, it is sometimes desirable to change the time scale or normalize a given time function. The result obtained in terms of normalized time is useful because it can be applied directly to different systems having similar mathematical equations.

If t is changed into t/α, where α is a positive constant, then the function $f(t)$ is changed into $f(t/\alpha)$. If we denote the Laplace transform of $f(t)$ by $F(s)$, then the Laplace transform of $f(t/\alpha)$ may be obtained as follows:

$$\mathcal{L}\left[f\left(\frac{t}{\alpha}\right)\right] = \int_0^\infty f\left(\frac{t}{\alpha}\right)e^{-st}\,dt$$

Letting $t/\alpha = t_1$ and $\alpha s = s_1$, we obtain

$$\begin{aligned}\mathcal{L}\left[f\left(\frac{t}{\alpha}\right)\right] &= \int_0^\infty f(t_1)e^{-s_1t_1}\,d(\alpha t_1)\\ &= \alpha\int_0^\infty f(t_1)e^{-s_1t_1}\,dt_1\\ &= \alpha F(s_1)\end{aligned}$$

or

$$\mathcal{L}\left[f\left(\frac{t}{\alpha}\right)\right] = \alpha F(\alpha s)$$

As an example, consider $f(t) = e^{-t}$ and $f(t/5) = e^{-0.2t}$. We obtain

$$\mathcal{L}[f(t)] = \mathcal{L}[e^{-t}] = F(s) = \frac{1}{s+1}$$

Hence

$$\mathcal{L}\left[f\left(\frac{t}{5}\right)\right] = \mathcal{L}[e^{-0.2t}] = 5F(5s) = \frac{5}{5s+1}$$

This result can be verified easily by taking the Laplace transform of $e^{-0.2t}$ directly as follows:

$$\mathcal{L}[e^{-0.2t}] = \frac{1}{s+0.2} = \frac{5}{5s+1}$$

Comments on the Lower Limit of the Laplace Integral. In some cases, $f(t)$ possesses an impulse function at $t = 0$. Then the lower limit of the Laplace integral must

PETITIONER'S EXHIBIT 1002
US PATENT NO. 6,581,565
Page 9821

be clearly specified as to whether it is 0− or 0+, since the Laplace transforms of $f(t)$ differ for these two lower limits. If such a distinction of the lower limit of the Laplace integral is necessary, we use the notations

$$\mathcal{L}_+[f(t)] = \int_{0+}^{\infty} f(t)e^{-st}\,dt$$

$$\mathcal{L}_-[f(t)] = \int_{0-}^{\infty} f(t)e^{-st}\,dt = \mathcal{L}_+[f(t)] + \int_{0-}^{0+} f(t)e^{-st}\,dt$$

If $f(t)$ involves an impulse function at $t = 0$, then

$$\mathcal{L}_+[f(t)] \neq \mathcal{L}_-[f(t)]$$

since

$$\int_{0-}^{0+} f(t)e^{-st}\,dt \neq 0$$

for such a case. Obviously, if $f(t)$ does not possess an impulse function at $t = 0$ (that is, if the function to be transformed is finite between $t = 0-$ and $t = 0+$), then

$$\mathcal{L}_+[f(t)] = \mathcal{L}_-[f(t)]$$

2–4 LAPLACE TRANSFORM THEOREMS

This section presents several theorems on Laplace transformation that are important in control engineering.

Real Differentiation Theorem. The Laplace transform of the derivative of a function $f(t)$ is given by

$$\mathcal{L}\left[\frac{d}{dt}f(t)\right] = sF(s) - f(0) \tag{2–7}$$

where $f(0)$ is the initial value of $f(t)$ evaluated at $t = 0$. [Here we assumed $f(0-) = f(0+) = f(0)$.]

For a given function $f(t)$, the values of $f(0+)$ and $f(0-)$ may be the same or different, as illustrated in Figure 2–2. The distinction between $f(0+)$ and $f(0-)$ is important

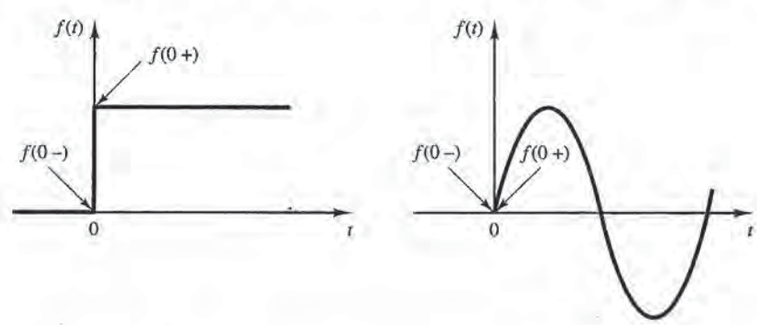

Figure 2–2
Step function and sine function indicating initial values at $t = 0-$ and $t = 0+$.

PETITIONER'S EXHIBIT 1002
US PATENT NO. 6,581,565
Page 9822

when $f(t)$ has a discontinuity at $t = 0$ because in such a case $df(t)/dt$ will involve an impulse function at $t = 0$. If $f(0+) \neq f(0-)$, Equation (2–7) must be modified to

$$\mathscr{L}_+\left[\frac{d}{dt}f(t)\right] = sF(s) - f(0+)$$

$$\mathscr{L}_-\left[\frac{d}{dt}f(t)\right] = sF(s) - f(0-)$$

To prove the real differentiation theorem, Equation (2–7), we proceed as follows. Integrating the Laplace integral by parts gives

$$\int_0^\infty f(t)e^{-st}\,dt = f(t)\frac{e^{-st}}{-s}\bigg|_0^\infty - \int_0^\infty \left[\frac{d}{dt}f(t)\right]\frac{e^{-st}}{-s}\,dt$$

Hence

$$F(s) = \frac{f(0)}{s} + \frac{1}{s}\mathscr{L}\left[\frac{d}{dt}f(t)\right]$$

It follows that

$$\mathscr{L}\left[\frac{d}{dt}f(t)\right] = sF(s) - f(0)$$

Similarly, we obtain the following relationship for the second derivative of $f(t)$:

$$\mathscr{L}\left[\frac{d^2}{dt^2}f(t)\right] = s^2F(s) - sf(0) - \dot{f}(0)$$

where $\dot{f}(0)$ is the value of $df(t)/dt$ evaluated at $t = 0$. To derive this equation, define

$$\frac{d}{dt}f(t) = g(t)$$

Then

$$\begin{aligned}\mathscr{L}\left[\frac{d^2}{dt^2}f(t)\right] &= \mathscr{L}\left[\frac{d}{dt}g(t)\right] = s\mathscr{L}[g(t)] - g(0)\\ &= s\mathscr{L}\left[\frac{d}{dt}f(t)\right] - \dot{f}(0)\\ &= s^2F(s) - sf(0) - \dot{f}(0)\end{aligned}$$

Similarly, for the nth derivative of $f(t)$, we obtain

$$\mathscr{L}\left[\frac{d^n}{dt^n}f(t)\right] = s^nF(s) - s^{n-1}f(0) - s^{n-2}\dot{f}(0) - \cdots - s\overset{(n-2)}{f}(0) - s\overset{(n-1)}{f}(0)$$

where $f(0), \dot{f}(0), \ldots, \overset{(n-1)}{f}(0)$ represent the values of $f(t), df(t)/dt, \ldots, d^{n-1}f(t)/dt^{n-1}$, respectively, evaluated at $t = 0$. If the distinction between $\mathscr{L}_+$ and $\mathscr{L}_-$ is necessary, we substitute $t = 0+$ or $t = 0-$ into $f(t), df(t)/dt, \ldots, d^{n-1}f(t)/dt^{n-1}$, depending on whether we take $\mathscr{L}_+$ or $\mathscr{L}_-$.

Note that, in order for Laplace transforms of derivatives of $f(t)$ to exist, $d^nf(t)/dt^n$ $(n = 1, 2, 3, \ldots)$ must be Laplace transformable.

PETITIONER'S EXHIBIT 1002
US PATENT NO. 6,581,565
Page 9823

Note also that, if all the initial values of $f(t)$ and its derivatives are equal to zero, then the Laplace transform of the nth derivative of $f(t)$ is given by $s^n F(s)$.

EXAMPLE 2–1 Consider the cosine function:

$$g(t) = 0, \qquad \text{for } t < 0$$
$$= \cos \omega t, \qquad \text{for } t \geq 0$$

The Laplace transform of this cosine function can be obtained directly as in the case of the sinusoidal function considered earlier. The use of the real differentiation theorem, however, will be demonstrated here by deriving the Laplace transform of the cosine function from the Laplace transform of the sine function. If we define

$$f(t) = 0, \qquad \text{for } t < 0$$
$$= \sin \omega t, \qquad \text{for } t \geq 0$$

then

$$\mathscr{L}[\sin \omega t] = F(s) = \frac{\omega}{s^2 + \omega^2}$$

The Laplace transform of the cosine function is obtained as

$$\mathscr{L}[\cos \omega t] = \mathscr{L}\left[\frac{1}{\omega}\left(\frac{d}{dt}\sin \omega t\right)\right] = \frac{1}{\omega}[sF(s) - f(0)]$$
$$= \frac{1}{\omega}\left[\frac{s\omega}{s^2 + \omega^2} - 0\right] = \frac{s}{s^2 + \omega^2}$$

Final-Value Theorem. The final-value theorem relates the steady-state behavior of $f(t)$ to the behavior of $sF(s)$ in the neighborhood of $s = 0$. This theorem, however, applies if and only if $\lim_{t\to\infty} f(t)$ exists [which means that $f(t)$ settles down to a definite value for $t \to \infty$]. If all poles of $sF(s)$ lie in the left half s plane, $\lim_{t\to\infty} f(t)$ exists. But if $sF(s)$ has poles on the imaginary axis or in the right half s plane, $f(t)$ will contain oscillating or exponentially increasing time functions, respectively, and $\lim_{t\to\infty} f(t)$ will not exist. The final-value theorem does not apply to such cases. For instance, if $f(t)$ is the sinusoidal function $\sin \omega t$, $sF(s)$ has poles at $s = \pm j\omega$ and $\lim_{t\to\infty} f(t)$ does not exist. Therefore, this theorem is not applicable to such a function.

The final-value theorem may be stated as follows. If $f(t)$ and $df(t)/dt$ are Laplace transformable, if $F(s)$ is the Laplace transform of $f(t)$, and if $\lim_{t\to\infty} f(t)$ exists, then

$$\lim_{t\to\infty} f(t) = \lim_{s\to 0} sF(s)$$

To prove the theorem, we let s approach zero in the equation for the Laplace transform of the derivative of $f(t)$ or

$$\lim_{s\to 0} \int_0^\infty \left[\frac{d}{dt} f(t)\right] e^{-st}\, dt = \lim_{s\to 0} [sF(s) - f(0)]$$

Since $\lim_{s\to 0} e^{-st} = 1$, we obtain

$$\int_0^\infty \left[\frac{d}{dt} f(t)\right] dt = f(t)\Big|_0^\infty = f(\infty) - f(0)$$
$$= \lim_{s\to 0} sF(s) - f(0)$$

PETITIONER'S EXHIBIT 1002
US PATENT NO. 6,581,565
Page 9824

from which

$$f(\infty) = \lim_{t\to\infty} f(t) = \lim_{s\to 0} sF(s)$$

The final-value theorem states that the steady-state behavior of $f(t)$ is the same as the behavior of $sF(s)$ in the neighborhood of $s = 0$. Thus, it is possible to obtain the value of $f(t)$ at $t = \infty$ directly from $F(s)$.

EXAMPLE 2–2 Given

$$\mathcal{L}[f(t)] = F(s) = \frac{1}{s(s+1)}$$

what is $\lim_{t\to\infty} f(t)$?

Since the pole of $sF(s) = 1/(s+1)$ lies in the left half s plane, $\lim_{t\to\infty} f(t)$ exists. So the final-value theorem is applicable in this case.

$$\lim_{t\to\infty} f(t) = f(\infty) = \lim_{s\to 0} sF(s) = \lim_{s\to 0} \frac{s}{s(s+1)} = \lim_{s\to 0} \frac{1}{s+1} = 1$$

In fact, this result can easily be verified, since

$$f(t) = 1 - e^{-t}, \qquad \text{for } t \geq 0$$

Initial-Value Theorem. The initial-value theorem is the counterpart of the final-value theorem. By using this theorem, we are able to find the value of $f(t)$ at $t = 0+$ directly from the Laplace transform of $f(t)$. The initial-value theorem does not give the value of $f(t)$ at exactly $t = 0$ but at a time slightly greater than zero.

The initial-value theorem may be stated as follows: If $f(t)$ and $df(t)/dt$ are both Laplace transformable and if $\lim_{s\to\infty} sF(s)$ exists, then

$$f(0+) = \lim_{s\to\infty} sF(s)$$

To prove this theorem, we use the equation for the $\mathcal{L}_+$ transform of $df(t)/dt$:

$$\mathcal{L}_+\left[\frac{d}{dt} f(t)\right] = sF(s) - f(0+)$$

For the time interval $0+ \leq t \leq \infty$, as s approaches infinity, e^{-st} approaches zero. (Note that we must use $\mathcal{L}_+$ rather than $\mathcal{L}_-$ for this condition.) And so

$$\lim_{s\to\infty} \int_{0+}^{\infty} \left[\frac{d}{dt} f(t)\right] e^{-st}\, dt = \lim_{s\to\infty} [sF(s) - f(0+)] = 0$$

or

$$f(0+) = \lim_{s\to\infty} sF(s)$$

In applying the initial-value theorem, we are not limited as to the locations of the poles of $sF(s)$. Thus the initial-value theorem is valid for the sinusoidal function.

It should be noted that the initial-value theorem and the final-value theorem provide a convenient check on the solution, since they enable us to predict the system behavior in the time domain without actually transforming functions in s back to time functions.

Real-Integration Theorem. If $f(t)$ is of exponential order and $f(0-) = f(0+) = f(0)$, then the Laplace transform of $\int f(t)\, dt$ exists and is given by

$$\mathcal{L}\left[\int f(t)\, dt\right] = \frac{F(s)}{s} + \frac{f^{-1}(0)}{s} \tag{2–8}$$

PETITIONER'S EXHIBIT 1002
US PATENT NO. 6,581,565
Page 9825

where $F(s) = \mathscr{L}[f(t)]$ and $f^{-1}(0) = \int f(t)\,dt$ evaluated at $t = 0$.

Note that if $f(t)$ involves an impulse function at $t = 0$, then $f^{-1}(0+) \neq f^{-1}(0-)$. So if $f(t)$ involves an impulse function at $t = 0$, we must modify Equation (2–8) as follows:

$$\mathscr{L}_+\left[\int f(t)\,dt\right] = \frac{F(s)}{s} + \frac{f^{-1}(0+)}{s}$$

$$\mathscr{L}_-\left[\int f(t)\,dt\right] = \frac{F(s)}{s} + \frac{f^{-1}(0-)}{s}$$

The real-integration theorem given by Equation (2–8) can be proved in the following way. Integration by parts yields

$$\begin{aligned}
\mathscr{L}\left[\int f(t)\,dt\right] &= \int_0^\infty \left[\int f(t)\,dt\right] e^{-st}\,dt \\
&= \left[\int f(t)\,dt\right]\frac{e^{-st}}{-s}\bigg|_0^\infty - \int_0^\infty f(t)\,\frac{e^{-st}}{-s}\,dt \\
&= \frac{1}{s}\int f(t)\,dt\bigg|_{t=0} + \frac{1}{s}\int_0^\infty f(t)e^{-st}\,dt \\
&= \frac{f^{-1}(0)}{s} + \frac{F(s)}{s}
\end{aligned}$$

and the theorem is proved.

We see that integration in the time domain is converted into division in the s domain. If the initial value of the integral is zero, the Laplace transform of the integral of $f(t)$ is given by $F(s)/s$.

The preceding real-integration theorem given by Equation (2–8) can be modified slightly to deal with the definite integral of $f(t)$. If $f(t)$ is of exponential order, the Laplace transform of the definite integral $\int_0^t f(t)\,dt$ is given by

$$\mathscr{L}\left[\int_0^t f(t)\,dt\right] = \frac{F(s)}{s} \tag{2–9}$$

where $F(s) = \mathscr{L}[f(t)]$. This is also referred to as the real-integration theorem. Note that if $f(t)$ involves an impulse function at $t = 0$ then $\int_{0+}^t f(t)\,dt \neq \int_{0-}^t f(t)\,dt$ and the following distinction must be observed:

$$\mathscr{L}_+\left[\int_{0+}^t f(t)\,dt\right] = \frac{\mathscr{L}_+[f(t)]}{s}$$

$$\mathscr{L}_-\left[\int_{0-}^t f(t)\,dt\right] = \frac{\mathscr{L}_-[f(t)]}{s}$$

To prove Equation (2–9), first note that

$$\int_0^t f(t)\,dt = \int f(t)\,dt - f^{-1}(0)$$

PETITIONER'S EXHIBIT 1002
US PATENT NO. 6,581,565
Page 9826

where $f^{-1}(0)$ is equal to $\int f(t)\,dt$ evaluated at $t = 0$ and is a constant. Hence

$$\mathcal{L}\left[\int_0^t f(t)\,dt\right] = \mathcal{L}\left[\int f(t)\,dt\right] - \mathcal{L}[f^{-1}(0)]$$

Noting that $f^{-1}(0)$ is a constant so that

$$\mathcal{L}[f^{-1}(0)] = \frac{f^{-1}(0)}{s}$$

we obtain

$$\mathcal{L}\left[\int_0^t f(t)\,dt\right] = \frac{F(s)}{s} + \frac{f^{-1}(0)}{s} - \frac{f^{-1}(0)}{s} = \frac{F(s)}{s}$$

Complex-Differentiation Theorem. If $f(t)$ is Laplace transformable, then, except at poles of $F(s)$,

$$\mathcal{L}[tf(t)] = -\frac{d}{ds}F(s)$$

where $F(s) = \mathcal{L}[f(t)]$. This is known as the complex-differentiation theorem. Also,

$$\mathcal{L}[t^2 f(t)] = \frac{d^2}{ds^2}F(s)$$

In general,

$$\mathcal{L}[t^n f(t)] = (-1)^n \frac{d^n}{ds^n}F(s), \qquad \text{for } n = 1, 2, 3, \ldots$$

To prove the complex-differentiation theorem, we proceed as follows:

$$\mathcal{L}[tf(t)] = \int_0^\infty tf(t)e^{-st}\,dt = -\int_0^\infty f(t)\frac{d}{ds}(e^{-st})\,dt$$

$$= -\frac{d}{ds}\int_0^\infty f(t)e^{-st}\,dt = -\frac{d}{ds}F(s)$$

Hence the theorem. Similarly, by defining $tf(t) = g(t)$, the result is

$$\mathcal{L}[t^2 f(t)] = \mathcal{L}[tg(t)] = -\frac{d}{ds}G(s) = -\frac{d}{ds}\left[-\frac{d}{ds}F(s)\right]$$

$$= (-1)^2\frac{d^2}{ds^2}F(s) = \frac{d^2}{ds^2}F(s)$$

Repeating the same process, we obtain

$$\mathcal{L}[t^n f(t)] = (-1)^n \frac{d^n}{ds^n}F(s), \qquad \text{for } n = 1, 2, 3, \ldots$$

Convolution Integral. Consider the Laplace transform of

$$\int_0^t f_1(t-\tau)f_2(\tau)\,d\tau$$

PETITIONER'S EXHIBIT 1002
US PATENT NO. 6,581,565
Page 9827

This integral is often written as

$$f_1(t) * f_2(t)$$

The mathematical operation $f_1(t) * f_2(t)$ is called *convolution*. Note that if we put $t - \tau = \xi$, then

$$\int_0^t f_1(t-\tau)f_2(\tau)\,d\tau = -\int_t^0 f_1(\xi)f_2(t-\xi)\,d\xi$$
$$= \int_0^t f_1(\tau)f_2(t-\tau)\,d\tau$$

Hence

$$f_1(t) * f_2(t) = \int_0^t f_1(t-\tau)f_2(\tau)\,d\tau$$
$$= \int_0^t f_1(\tau)f_2(t-\tau)\,d\tau$$
$$= f_2(t) * f_1(t)$$

If $f_1(t)$ and $f_2(t)$ are piecewise continuous and of exponential order, then the Laplace transform of

$$\int_0^t f_1(t-\tau)f_2(\tau)\,d\tau$$

can be obtained as follows:

$$\mathscr{L}\left[\int_0^t f_1(t-\tau)f_2(\tau)\,d\tau\right] = F_1(s)F_2(s) \tag{2–10}$$

where

$$F_1(s) = \int_0^\infty f_1(t)e^{-st}\,dt = \mathscr{L}[f_1(t)]$$

$$F_2(s) = \int_0^\infty f_2(t)e^{-st}\,dt = \mathscr{L}[f_2(t)]$$

To prove Equation (2–10) note that $f_1(t-\tau)1(t-\tau) = 0$ for $\tau > t$. Hence

$$\int_0^t f_1(t-\tau)f_2(\tau)\,d\tau = \int_0^\infty f_1(t-\tau)1(t-\tau)f_2(\tau)\,d\tau$$

Then

$$\mathscr{L}\left[\int_0^t f_1(t-\tau)f_2(\tau)\,d\tau\right] = \mathscr{L}\left[\int_0^\infty f_1(t-\tau)1(t-\tau)f_2(\tau)\,d\tau\right]$$
$$= \int_0^\infty e^{-st}\left[\int_0^\infty f_1(t-\tau)1(t-\tau)f_2(\tau)\,d\tau\right]dt$$

Substituting $t - \tau = \lambda$ in this last equation and changing the order of integration, which is valid in this case because $f_1(t)$ and $f_2(t)$ are Laplace transformable, we obtain

$$\begin{aligned}\mathscr{L}\left[\int_0^t f_1(t-\tau)f_2(\tau)\,d\tau\right] &= \int_0^\infty f_1(t-\tau)1(t-\tau)e^{-st}\,dt \int_0^\infty f_2(\tau)\,d\tau \\ &= \int_0^\infty f_1(\lambda)e^{-s(\lambda+\tau)}\,d\lambda \int_0^\infty f_2(\tau)\,d\tau \\ &= \int_0^\infty f_1(\lambda)e^{-s\lambda}\,d\lambda \int_0^\infty f_2(\tau)e^{-s\tau}\,d\tau \\ &= F_1(s)F_2(s)\end{aligned}$$

This last equation gives the Laplace transform of the convolution integral. Conversely, if the Laplace transform of a function is given by a product of two Laplace transform functions, $F_1(s)F_2(s)$, then the corresponding time function (the inverse Laplace transform) is given by the convolution integral $f_1(t) * f_2(t)$.

Laplace Transform of Product of Two Time Functions. The Laplace transform of the product of two Laplace transformable functions $f(t)$ and $g(t)$ can be given by

$$\mathscr{L}[f(t)g(t)] = \frac{1}{2\pi j}\int_{c-j\infty}^{c+j\infty} F(p)G(s-p)\,dp \tag{2–11}$$

To show this, we may proceed as follows: The Laplace transform of the product of $f(t)$ and $g(t)$ can be written as

$$\mathscr{L}[f(t)g(t)] = \int_0^\infty f(t)g(t)e^{-st}\,dt \tag{2–12}$$

Note that the inversion integral is

$$f(t) = \frac{1}{2\pi j}\int_{c-j\infty}^{c+j\infty} F(s)e^{st}\,ds, \qquad \text{for } t > 0$$

where c is the abscissa of convergence for $F(s)$. Thus,

$$\mathscr{L}[f(t)g(t)] = \frac{1}{2\pi j}\int_0^\infty \int_{c-j\infty}^{c+j\infty} F(p)e^{pt}\,dp\; g(t)e^{-st}\,dt$$

Because of the uniform convergence of the integrals considered, we may invert the order of integration:

$$\mathscr{L}[f(t)g(t)] = \frac{1}{2\pi j}\int_{c-j\infty}^{c+j\infty} F(p)\,dp \int_0^\infty g(t)e^{-(s-p)t}\,dt$$

Noting that

$$\int_0^\infty g(t)e^{-(s-p)t}\,dt = G(s-p)$$

we obtain

$$\mathscr{L}[f(t)g(t)] = \frac{1}{2\pi j}\int_{c-j\infty}^{c+j\infty} F(p)G(s-p)\,dp \tag{2–13}$$

Summary. Table 2–2 summarizes properties and theorems of the Laplace transforms. Most of them have been derived or proved in this section.

PETITIONER'S EXHIBIT 1002
US PATENT NO. 6,581,565
Page 9829

Table 2–2 Properties of Laplace Transforms

1	$\mathscr{L}[Af(t)] = AF(s)$
2	$\mathscr{L}[f_1(t) \pm f_2(t)] = F_1(s) \pm F_2(s)$
3	$\mathscr{L}_{\pm}\left[\frac{d}{dt}f(t)\right] = sF(s) - f(0\pm)$
4	$\mathscr{L}_{\pm}\left[\frac{d^2}{dt^2}f(t)\right] = s^2F(s) - sf(0\pm) - \dot{f}(0\pm)$
5	$\mathscr{L}_{\pm}\left[\frac{d^n}{dt^n}f(t)\right] = s^nF(s) - \sum_{k=1}^{n} s^{n-k}\overset{(k-1)}{f}(0\pm)$ where $\overset{(k-1)}{f}(t) = \frac{d^{k-1}}{dt^{k-1}}f(t)$
6	$\mathscr{L}_{\pm}\left[\int f(t)\,dt\right] = \frac{F(s)}{s} + \frac{1}{s}\left[\int f(t)\,dt\right]_{t=0\pm}$
7	$\mathscr{L}_{\pm}\left[\int\cdots\int f(t)(dt)^n\right] = \frac{F(s)}{s^n} + \sum_{k=1}^{n}\frac{1}{s^{n-k+1}}\left[\int\cdots\int f(t)(dt)^k\right]_{t=0\pm}$
8	$\mathscr{L}\left[\int_0^t f(t)\,dt\right] = \frac{F(s)}{s}$
9	$\int_0^\infty f(t)\,dt = \lim_{s\to 0}F(s)$ if $\int_0^\infty f(t)\,dt$ exists
10	$\mathscr{L}[e^{-\alpha t}f(t)] = F(s+a)$
11	$\mathscr{L}[f(t-\alpha)1(t-\alpha)] = e^{-\alpha s}F(s) \quad \alpha \geq 0$
12	$\mathscr{L}[tf(t)] = -\frac{dF(s)}{ds}$
13	$\mathscr{L}[t^2f(t)] = \frac{d^2}{ds^2}F(s)$
14	$\mathscr{L}[t^nf(t)] = (-1)^n\frac{d^n}{ds^n}F(s) \quad (n = 1, 2, 3, \ldots)$
15	$\mathscr{L}\left[\frac{1}{t}f(t)\right] = \int_s^\infty F(s)\,ds$ if $\lim_{t\to 0}\frac{1}{t}f(t)$ exists
16	$\mathscr{L}\left[f\left(\frac{1}{a}\right)\right] = aF(as)$
17	$\mathscr{L}\left[\int_0^t f_1(t-\tau)f_2(\tau)\,d\tau\right] = F_1(s)F_2(s)$
18	$\mathscr{L}[f(t)g(t)] = \frac{1}{2\pi j}\int_{c-j\infty}^{c+j\infty}F(p)G(s-p)\,dp$

PETITIONER'S EXHIBIT 1002
US PATENT NO. 6,581,565
Page 9830

2–5 INVERSE LAPLACE TRANSFORMATION

As noted earlier, the inverse Laplace transform can be obtained by use of the inversion integral given by Equation (2–4). However, the inversion integral is complicated and, therefore, its use is not recommended for finding inverse Laplace transforms of commonly encountered functions in control engineering.

A convenient method for obtaining inverse Laplace transforms is to use a table of Laplace transforms. In this case, the Laplace transform must be in a form immediately recognizable in such a table. Quite often the function in question may not appear in tables of Laplace transforms available to the engineer. If a particular transform $F(s)$ cannot be found in a table, then we may expand it into partial fractions and write $F(s)$ in terms of simple functions of s for which the inverse Laplace transforms are already known.

Note that these simpler methods for finding inverse Laplace transforms are based on the fact that the unique correspondence of a time function and its inverse Laplace transform holds for any continuous time function.

Partial-Fraction Expansion Method for Finding Inverse Laplace Transforms. For problems in control systems analysis, $F(s)$, the Laplace transform of $f(t)$, frequently occurs in the form

$$F(s) = \frac{B(s)}{A(s)}$$

where $A(s)$ and $B(s)$ are polynomials in s. In the expansion of $F(s) = B(s)/A(s)$ into a partial-fraction form, it is important that the highest power of s in $A(s)$ be greater than the highest power of s in $B(s)$. If such is not the case, the numerator $B(s)$ must be divided by the denominator $A(s)$ in order to produce a polynomial in s plus a remainder (a ratio of polynomials in s whose numerator is of lower degree than the denominator).

If $F(s)$ is broken up into components,

$$F(s) = F_1(s) + F_2(s) + \cdots + F_n(s)$$

and if the inverse Laplace transforms of $F_1(s), F_2(s), \ldots, F_n(s)$ are readily available, then

$$\begin{aligned}\mathscr{L}^{-1}[F(s)] &= \mathscr{L}^{-1}[F_1(s)] + \mathscr{L}^{-1}[F_2(s)] + \cdots + \mathscr{L}^{-1}[F_n(s)] \\ &= f_1(t) + f_2(t) + \cdots + f_n(t)\end{aligned}$$

where $f_1(t), f_2(t), \ldots, f_n(t)$ are the inverse Laplace transforms of $F_1(s), F_2(s), \ldots, F_n(s)$, respectively. The inverse Laplace transform of $F(s)$ thus obtained is unique except possibly at points where the time function is discontinuous. Whenever the time function is continuous, the time function $f(t)$ and its Laplace transform $F(s)$ have a one-to-one correspondence.

The advantage of the partial-fraction expansion approach is that the individual terms of $F(s)$, resulting from the expansion into partial-fraction form, are very simple functions of s; consequently, it is not necessary to refer to a Laplace transform table if we memorize several simple Laplace transform pairs. It should be noted, however, that in applying the partial-fraction expansion technique in the search for the inverse Laplace

PETITIONER'S EXHIBIT 1002
US PATENT NO. 6,581,565
Page 9831

transform of $F(s) = B(s)/A(s)$ the roots of the denominator polynomial $A(s)$ must be obtained in advance. That is, this method does not apply until the denominator polynomial has been factored.

Partial-Fraction Expansion when $F(s)$ Involves Distinct Poles Only. Consider $F(s)$ written in the factored form

$$F(s) = \frac{B(s)}{A(s)} = \frac{K(s + z_1)(s + z_2)\cdots(s + z_m)}{(s + p_1)(s + p_2)\cdots(s + p_n)}, \qquad \text{for } m < n$$

where $p_1, p_2, \ldots, p_n$ and $z_1, z_2, \ldots, z_m$ are either real or complex quantities, but for each complex p_i or z_i there will occur the complex conjugate of p_i or z_i, respectively. If $F(s)$ involves distinct poles only, then it can be expanded into a sum of simple partial fractions as follows:

$$F(s) = \frac{B(s)}{A(s)} = \frac{a_1}{s + p_1} + \frac{a_2}{s + p_2} + \cdots + \frac{a_n}{s + p_n} \tag{2–14}$$

where a_k $(k = 1, 2, \ldots, n)$ are constants. The coefficient a_k is called the *residue* at the pole at $s = -p_k$. The value of a_k can be found by multiplying both sides of Equation (2–14) by $(s + p_k)$ and letting $s = -p_k$, which gives

$$\begin{aligned}\left[(s + p_k)\frac{B(s)}{A(s)}\right]_{s=-p_k} &= \left[\frac{a_1}{s + p_1}(s + p_k) + \frac{a_2}{s + p_2}(s + p_k)\right.\\ &\qquad \left. + \cdots + \frac{a_k}{s + p_k}(s + p_k) + \cdots + \frac{a_n}{s + p_n}(s + p_k)\right]_{s=-p_k}\\ &= a_k\end{aligned}$$

We see that all the expanded terms drop out with the exception of a_k. Thus the residue a_k is found from

$$a_k = \left[(s + p_k)\frac{B(s)}{A(s)}\right]_{s=-p_k} \tag{2–15}$$

Note that, since $f(t)$ is a real function of time, if p_1 and p_2 are complex conjugates, then the residues a_1 and a_2 are also complex conjugates. Only one of the conjugates, a_1 or a_2, needs to be evaluated because the other is known automatically.

Since

$$\mathcal{L}^{-1}\left[\frac{a_k}{s + p_k}\right] = a_k e^{-p_k t}$$

$f(t)$ is obtained as

$$f(t) = \mathcal{L}^{-1}[F(s)] = a_1 e^{-p_1 t} + a_2 e^{-p_2 t} + \cdots + a_n e^{-p_n t}, \qquad \text{for } t \geq 0$$

EXAMPLE 2–3 Find the inverse Laplace transform of

$$F(s) = \frac{s + 3}{(s + 1)(s + 2)}$$

PETITIONER'S EXHIBIT 1002
US PATENT NO. 6,581,565
Page 9832

The partial-fraction expansion of $F(s)$ is

$$F(s) = \frac{s+3}{(s+1)(s+2)} = \frac{a_1}{s+1} + \frac{a_2}{s+2}$$

where a_1 and a_2 are found by using Equation (2–15):

$$a_1 = \left[(s+1)\frac{s+3}{(s+1)(s+2)}\right]_{s=-1} = \left[\frac{s+3}{s+2}\right]_{s=-1} = 2$$

$$a_2 = \left[(s+2)\frac{s+3}{(s+1)(s+2)}\right]_{s=-2} = \left[\frac{s+3}{s+1}\right]_{s=-2} = -1$$

Thus

$$\begin{aligned} f(t) &= \mathcal{L}^{-1}[F(s)] \\ &= \mathcal{L}^{-1}\left[\frac{2}{s+1}\right] + \mathcal{L}^{-1}\left[\frac{-1}{s+2}\right] \\ &= 2e^{-t} - e^{-2t}, \qquad \text{for } t \geq 0 \end{aligned}$$

EXAMPLE 2–4 Obtain the inverse Laplace transform of

$$G(s) = \frac{s^3 + 5s^2 + 9s + 7}{(s+1)(s+2)}$$

Here, since the degree of the numerator polynomial is higher than that of the denominator polynomial, we must divide the numerator by the denominator.

$$G(s) = s + 2 + \frac{s+3}{(s+1)(s+2)}$$

Note that the Laplace transform of the unit-impulse function $\delta(t)$ is 1 and that the Laplace transform of $d\delta(t)/dt$ is s. The third term on the right-hand side of this last equation is $F(s)$ in Example 2–3. So the inverse Laplace transform of $G(s)$ is given as

$$g(t) = \frac{d}{dt}\delta(t) + 2\delta(t) + 2e^{-t} - e^{-2t}, \qquad \text{for } t \geq 0-$$

EXAMPLE 2–5 Find the inverse Laplace transform of

$$F(s) = \frac{2s+12}{s^2+2s+5}$$

Notice that the denominator polynomial can be factored as

$$s^2 + 2s + 5 = (s + 1 + j2)(s + 1 - j2)$$

If the function $F(s)$ involves a pair of complex-conjugate poles, it is convenient not to expand $F(s)$ into the usual partial fractions but to expand it into the sum of a damped sine and a damped cosine function.

Noting that $s^2 + 2s + 5 = (s+1)^2 + 2^2$ and referring to the Laplace transforms of $e^{-\alpha t}\sin\omega t$ and $e^{-\alpha t}\cos\omega t$, rewritten thus,

$$\mathcal{L}[e^{-\alpha t}\sin\omega t] = \frac{\omega}{(s+\alpha)^2 + \omega^2}$$

$$\mathcal{L}[e^{-\alpha t}\cos\omega t] = \frac{s+\alpha}{(s+\alpha)^2 + \omega^2}$$

PETITIONER'S EXHIBIT 1002
US PATENT NO. 6,581,565
Page 9833

the given $F(s)$ can be written as a sum of a damped sine and a damped cosine function.

$$F(s) = \frac{2s + 12}{s^2 + 2s + 5} = \frac{10 + 2(s + 1)}{(s + 1)^2 + 2^2}$$
$$= 5\frac{2}{(s + 1)^2 + 2^2} + 2\frac{s + 1}{(s + 1)^2 + 2^2}$$

It follows that

$$f(t) = \mathscr{L}^{-1}[F(s)]$$
$$= 5\mathscr{L}^{-1}\left[\frac{2}{(s + 1)^2 + 2^2}\right] + 2\mathscr{L}^{-1}\left[\frac{s + 1}{(s + 1)^2 + 2^2}\right]$$
$$= 5e^{-t}\sin 2t + 2e^{-t}\cos 2t, \qquad \text{for } t \geq 0$$

Partial-Fraction Expansion when $F(s)$ Involves Multiple Poles. Instead of discussing the general case, we shall use an example to show how to obtain the partial-fraction expansion of $F(s)$.

Consider the following $F(s)$:

$$F(s) = \frac{s^2 + 2s + 3}{(s + 1)^3}$$

The partial-fraction expansion of this $F(s)$ involves three terms,

$$F(s) = \frac{B(s)}{A(s)} = \frac{b_1}{s + 1} + \frac{b_2}{(s + 1)^2} + \frac{b_3}{(s + 1)^3}$$

where b_3, b_2, and b_1 are determined as follows. By multiplying both sides of this last equation by $(s + 1)^3$, we have

$$(s + 1)^3\frac{B(s)}{A(s)} = b_1(s + 1)^2 + b_2(s + 1) + b_3 \tag{2–16}$$

Then letting $s = -1$, Equation (2–16) gives

$$\left[(s + 1)^3\frac{B(s)}{A(s)}\right]_{s=-1} = b_3$$

Also, differentiation of both sides of Equation (2–16) with respect to s yields

$$\frac{d}{ds}\left[(s + 1)^3\frac{B(s)}{A(s)}\right] = b_2 + 2b_1(s + 1) \tag{2–17}$$

If we let $s = -1$ in Equation (2–17), then

$$\frac{d}{ds}\left[(s + 1)^3\frac{B(s)}{A(s)}\right]_{s=-1} = b_2$$

By differentiating both sides of Equation (2–17) with respect to s, the result is

$$\frac{d^2}{ds^2}\left[(s + 1)^3\frac{B(s)}{A(s)}\right] = 2b_1$$

PETITIONER'S EXHIBIT 1002
US PATENT NO. 6,581,565
Page 9834

From the preceding analysis it can be seen that the values of b_3, b_2, and b_1 are found systematically as follows:

$$
\begin{aligned}
b_3 &= \left[(s+1)^3 \frac{B(s)}{A(s)}\right]_{s=-1} \\
&= (s^2 + 2s + 3)_{s=-1} \\
&= 2 \\
b_2 &= \left\{\frac{d}{ds}\left[(s+1)^3 \frac{B(s)}{A(s)}\right]\right\}_{s=-1} \\
&= \left[\frac{d}{ds}(s^2 + 2s + 3)\right]_{s=-1} \\
&= (2s + 2)_{s=-1} \\
&= 0 \\
b_1 &= \frac{1}{2!}\left\{\frac{d^2}{ds^2}\left[(s+1)^3 \frac{B(s)}{A(s)}\right]\right\}_{s=-1} \\
&= \frac{1}{2!}\left[\frac{d^2}{ds^2}(s^2 + 2s + 3)\right]_{s=-1} \\
&= \frac{1}{2}(2) = 1
\end{aligned}
$$

We thus obtain

$$
\begin{aligned}
f(t) &= \mathscr{L}^{-1}[F(s)] \\
&= \mathscr{L}^{-1}\left[\frac{1}{s+1}\right] + \mathscr{L}^{-1}\left[\frac{0}{(s+1)^2}\right] + \mathscr{L}^{-1}\left[\frac{2}{(s+1)^3}\right] \\
&= e^{-t} + 0 + t^2 e^{-t} \\
&= (1 + t^2)e^{-t}, \qquad \text{for } t \geq 0
\end{aligned}
$$

Comments. For complicated functions with denominators involving higher-order polynomials, partial-fraction expansion may be quite time consuming. In such a case, use of MATLAB is recommended. (See Section 2–6.)

2–6 PARTIAL-FRACTION EXPANSION WITH MATLAB

MATLAB has a command to obtain the partial-fraction expansion of $B(s)/A(s)$. It also has a command to obtain the zeros and poles of $B(s)/A(s)$.

We shall first present the MATLAB approach to obtain the partial-fraction expansion of $B(s)/A(s)$. Then we discuss the MATLAB approach to obtain the zeros and poles of $B(s)/A(s)$.

Partial-Fraction Expansion with MATLAB. Consider the following function $B(s)/A(s)$:

$$
\frac{B(s)}{A(s)} = \frac{\text{num}}{\text{den}} = \frac{b_0 s^n + b_1 s^{n-1} + \cdots + b_n}{s^n + a_1 s^{n-1} + \cdots + a_n}
$$

PETITIONER'S EXHIBIT 1002
US PATENT NO. 6,581,565
Page 9835

where some of a_i and b_j may be zero. In MATLAB row vectors num and den specify the coefficients of the numerator and denominator of the transfer function. That is,

```
num = [b0  b1  ...  bn]
den = [1   a1  ...  an]
```

The command

```
[r,p,k] = residue(num,den)
```

finds the residues (r), poles (p), and direct terms (k) of a partial-fraction expansion of the ratio of two polynomials $B(s)$ and $A(s)$.

The partial-fraction expansion of $B(s)/A(s)$ is given by

$$\frac{B(s)}{A(s)} = \frac{r(1)}{s - p(1)} + \frac{r(2)}{s - p(2)} + \cdots + \frac{r(n)}{s - p(n)} + k(s) \tag{2–18}$$

Comparing Equations (2–14) and (2–18), we note that $p(1) = -p_1$, $p(2) = -p_2, \ldots,$ $p(n) = -p_n; r(1) = a_1, r(2) = a_2, \ldots, r(n) = a_n$. [$k(s)$ is a direct term.]

EXAMPLE 2–6 Consider the following transfer function,

$$\frac{B(s)}{A(s)} = \frac{2s^3 + 5s^2 + 3s + 6}{s^3 + 6s^2 + 11s + 6}$$

For this function,

```
num= [2  5  3  6]
den= [1  6  11  6]
```

The command

```
[r,p,k] = residue(num,den)
```

gives the following result:

```
[r,p,k] = residue(num,den)

r =

    -6.0000
    -4.0000
     3.0000

p =

    -3.0000
    -2.0000
    -1.0000

k =

     2
```


PETITIONER'S EXHIBIT 1002
US PATENT NO. 6,581,565
Page 9836

(Note that the residues are returned in column vector r, the pole locations in column vector p, and the direct term in row vector k.) This is the MATLAB representation of the following partial-fraction expansion of $B(s)/A(s)$:

$$\frac{B(s)}{A(s)} = \frac{2s^3 + 5s^2 + 3s + 6}{s^3 + 6s^2 + 11s + 6}$$

$$= \frac{-6}{s+3} + \frac{-4}{s+2} + \frac{3}{s+1} + 2$$

The residue command can also be used to form the polynomials (numerator and denominator) from its partial-fraction expansion. That is, the command

```
[num,den] = residue(r,p,k)
```

where r, p, and k are as given in the previous MATLAB output, converts the partial-fraction expansion back to the polynomial ratio $B(s)/A(s)$, as follows:

```
[num,den] = residue(r,p,k);
printsys(num,den,'s')
num/den =
   2s^3 + 5s^2 + 3s + 6
   ---------------------
   s^3 + 6s^2 + 11s + 6
```

The command

```
printsys(num,den,'s')
```

prints the num/den in terms of the ratio of polynomials in s.

Note that if $p(j) = p(j+1) = \cdots = p(j+m-1)$ [that is, $p_j = p_{j+1} = \cdots = p_{j+m-1}$], the pole $p(j)$ is a pole of multiplicity m. In such a case, the expansion includes terms of the form

$$\frac{r(j)}{s - p(j)} + \frac{r(j+1)}{[s - p(j)]^2} + \cdots + \frac{r(j+m-1)}{[s - p(j)]^m}$$

For details, see Example 2–7.

EXAMPLE 2–7 Expand the following $B(s)/A(s)$ into partial-fractions with MATLAB.

$$\frac{B(s)}{A(s)} = \frac{s^2 + 2s + 3}{(s+1)^3} = \frac{s^2 + 2s + 3}{s^3 + 3s^2 + 3s + 1}$$

For this function, we have

```
num = [0 1 2 3]
den = [1 3 3 1]
```

The command

```
[r,p,k] = residue(num,den)
```

gives the result shown on the next page. It is the MATLAB representation of the following partial-fraction expansion of $B(s)/A(s)$:

$$\frac{B(s)}{A(s)} = \frac{1}{s+1} + \frac{0}{(s+1)^2} + \frac{2}{(s+1)^3}$$

PETITIONER'S EXHIBIT 1002
US PATENT NO. 6,581,565
Page 9837

```
num = [0 1 2 3];
den = [1 3 3 1];
[r,p,k] = residue(num,den)

r =

    1.0000
    0.0000
    2.0000

p =

   -1.0000
   -1.0000
   -1.0000

k =

    []
```

Note that the direct term k is zero.

To obtain the original function $B(s)/A(s)$ from r, p, and k, enter the following program to the computer:

```
[num,den] = residue(r,p,k);
printsys(num,den,'s')
```

Then the computer will show the num/den as follows:

$$\text{num/den} = \frac{\text{s^2 + 2s + 3}}{\text{s^3 + 3s^2 + 3s + 1}}$$

Finding Zeros and Poles of $B(s)/A(s)$ with MATLAB. MATLAB has a command

```
[z,p,K] = tf2zp(num,den)
```

to obtain the zeros, poles, and gain K of $B(s)/A(s)$.

Consider the system defined by

$$\frac{B(s)}{A(s)} = \frac{4s^2 + 16s + 12}{s^4 + 12s^3 + 44s^2 + 48s}$$

To obtain the zeros (z), poles (p), and gain (K), enter the following MATLAB program into the computer:

```
num = [0   0   4   16   12];
den = [1   12   44   48   0];
[z,p,K] = tf2zp(num,den)
```

Then the computer will produce the following output on the screen:

PETITIONER'S EXHIBIT 1002
US PATENT NO. 6,581,565
Page 9838

```
z =

    -3
    -1

p =

     0
    -6.0000
    -4.0000
    -2.0000

K =

    4
```

The zeros are at $s = -3$ and -1. The poles are at $s = 0, -6, -4$, and -2. The gain K is 4.

If the zeros, poles, and gain K are given, then the following MATLAB program will yield the original num/den.

```
z = [-1; -3];
p = [0; -2; -4; -6];
K = 4;
[num,den] = zp2tf(z,p,K);
printsys(num,den,'s')

num/den =

        4s^2 + 16s + 12
  ----------------------------
  s^4 + 12s^3 + 44s^2 + 48s
```

2-7 SOLVING LINEAR, TIME-INVARIANT, DIFFERENTIAL EQUATIONS

In this section we are concerned with the use of the Laplace transform method in solving linear, time-invariant, differential equations.

The Laplace transform method yields the complete solution (complementary solution and particular solution) of linear, time-invariant, differential equations. Classical methods for finding the complete solution of a differential equation require the evaluation of the integration constants from the initial conditions. In the case of the Laplace transform method, however, this requirement is unnecessary because the initial conditions are automatically included in the Laplace transform of the differential equation.

If all initial conditions are zero, then the Laplace transform of the differential equation is obtained simply by replacing d/dt with s, d^2/dt^2 with s^2, and so on.

In solving linear, time-invariant, differential equations by the Laplace transform method, two steps are involved.

PETITIONER'S EXHIBIT 1002
US PATENT NO. 6,581,565
Page 9839

1. By taking the Laplace transform of each term in the given differential equation, convert the differential equation into an algebraic equation in s and obtain the expression for the Laplace transform of the dependent variable by rearranging the algebraic equation.
2. The time solution of the differential equation is obtained by finding the inverse Laplace transform of the dependent variable.

In the following discussion, two examples are used to demonstrate the solution of linear, time-invariant, differential equations by the Laplace transform method.

EXAMPLE 2–8 Find the solution $x(t)$ of the differential equation

$$\ddot{x} + 3\dot{x} + 2x = 0, \qquad x(0) = a, \qquad \dot{x} = b$$

where a and b are constants.

By writing the Laplace transform of $x(t)$ as $X(s)$ or

$$\mathscr{L}[x(t)] = X(s)$$

we obtain

$$\mathscr{L}[\dot{x}] = sX(s) - x(0)$$
$$\mathscr{L}[\ddot{x}] = s^2X(s) - sx(0) - \dot{x}(0)$$

And so the given differential equation becomes

$$[s^2X(s) - sx(0) - \dot{x}(0)] + 3[sX(s) - x(0)] + 2X(s) = 0$$

By substituting the given initial conditions into this last equation, we obtain

$$[s^2X(s) - as - b] + 3[sX(s) - a] + 2X(s) = 0$$

or

$$(s^2 + 3s + 2)X(s) = as + b + 3a$$

Solving for $X(s)$, we have

$$X(s) = \frac{as + b + 3a}{s^2 + 3s + 2} = \frac{as + b + 3a}{(s + 1)(s + 2)} = \frac{2a + b}{s + 1} - \frac{a + b}{s + 2}$$

The inverse Laplace transform of $X(s)$ gives

$$x(t) = \mathscr{L}^{-1}[X(s)] = \mathscr{L}^{-1}\left[\frac{2a + b}{s + 1}\right] - \mathscr{L}^{-1}\left[\frac{a + b}{s + 2}\right]$$
$$= (2a + b)e^{-t} - (a + b)e^{-2t}, \qquad \text{for } t \geq 0$$

which is the solution of the given differential equation. Notice that the initial conditions a and b appear in the solution. Thus $x(t)$ has no undetermined constants.

EXAMPLE 2–9 Find the solution $x(t)$ of the differential equation

$$\ddot{x} + 2\dot{x} + 5x = 3, \qquad x(0) = 0, \qquad \dot{x}(0) = 0$$

Noting that $\mathscr{L}[3] = 3/s$, $x(0) = 0$, and $\dot{x}(0) = 0$, the Laplace transform of the differential equation becomes

$$s^2X(s) + 2sX(s) + 5X(s) = \frac{3}{s}$$

PETITIONER'S EXHIBIT 1002
US PATENT NO. 6,581,565
Page 9840

Solving for $X(s)$, we find

$$X(s) = \frac{3}{s(s^2 + 2s + 5)} = \frac{3}{5}\frac{1}{s} - \frac{3}{5}\frac{s+2}{s^2 + 2s + 5}$$
$$= \frac{3}{5}\frac{1}{s} - \frac{3}{10}\frac{2}{(s+1)^2 + 2^2} - \frac{3}{5}\frac{s+1}{(s+1)^2 + 2^2}$$

Hence the inverse Laplace transform becomes

$$x(t) = \mathscr{L}^{-1}[X(s)]$$
$$= \frac{3}{5}\mathscr{L}^{-1}\left[\frac{1}{s}\right] - \frac{3}{10}\mathscr{L}^{-1}\left[\frac{2}{(s+1)^2 + 2^2}\right] - \frac{3}{5}\mathscr{L}^{-1}\left[\frac{s+1}{(s+1)^2 + 2^2}\right]$$
$$= \frac{3}{5} - \frac{3}{10}e^{-t}\sin 2t - \frac{3}{5}e^{-t}\cos 2t, \qquad \text{for } t \geq 0$$

which is the solution of the given differential equation.

EXAMPLE PROBLEMS AND SOLUTIONS

A–2–1. Find the poles of the following $F(s)$:

$$F(s) = \frac{1}{1 - e^{-s}}$$

Solution. The poles are found from

$$e^{-s} = 1$$

or

$$e^{-(\sigma + j\omega)} = e^{-\sigma}(\cos\omega - j\sin\omega) = 1$$

From this it follows that $\sigma = 0, \omega = \pm 2n\pi$ $(n = 0, 1, 2, \ldots)$. Thus, the poles are located at

$$s = \pm j2n\pi \qquad (n = 0, 1, 2, \ldots)$$

A–2–2. Find the Laplace transform of $f(t)$ defined by

$$f(t) = 0, \qquad \text{for } t < 0$$
$$= te^{-3t}, \qquad \text{for } t \geq 0$$

Solution. Since

$$\mathscr{L}[t] = G(s) = \frac{1}{s^2}$$

referring to Equation (2–6), we obtain

$$F(s) = \mathscr{L}[te^{-3t}] = G(s+3) = \frac{1}{(s+3)^2}$$

A–2–3. What is the Laplace transform of

$$f(t) = 0, \qquad \text{for } t < 0$$
$$= \sin(\omega t + \theta), \qquad \text{for } t \geq 0$$

where θ is a constant?

PETITIONER'S EXHIBIT 1002
US PATENT NO. 6,581,565
Page 9841

Solution. Noting that

$$\sin(\omega t + \theta) = \sin\omega t\cos\theta + \cos\omega t\sin\theta$$

we have

$$\begin{aligned}\mathscr{L}[\sin(\omega t + \theta)] &= \cos\theta\,\mathscr{L}[\sin\omega t] + \sin\theta\,\mathscr{L}[\cos\omega t]\\ &= \cos\theta\frac{\omega}{s^2+\omega^2} + \sin\theta\frac{s}{s^2+\omega^2}\\ &= \frac{\omega\cos\theta + s\sin\theta}{s^2+\omega^2}\end{aligned}$$

A–2–4. Find the Laplace transform $F(s)$ of the function $f(t)$ shown in Figure 2–3. where $f(t) = 0$ for $t < 0$ and $2a \le t$. Also find the limiting value of $F(s)$ as a approaches zero.

Solution. The function $f(t)$ can be written

$$f(t) = \frac{1}{a^2}1(t) - \frac{2}{a^2}1(t-a) + \frac{1}{a^2}1(t-2a)$$

Then

$$\begin{aligned}F(s) &= \mathscr{L}[f(t)]\\ &= \frac{1}{a^2}\mathscr{L}[1(t)] - \frac{2}{a^2}\mathscr{L}[1(t-a)] + \frac{1}{a^2}\mathscr{L}[1(t-2a)]\\ &= \frac{1}{a^2}\frac{1}{s} - \frac{2}{a^2}\frac{1}{s}e^{-as} + \frac{1}{a^2}\frac{1}{s}e^{-2as}\\ &= \frac{1}{a^2 s}(1 - 2e^{-as} + e^{-2as})\end{aligned}$$

As a approaches zero, we have

$$\begin{aligned}\lim_{a\to 0}F(s) &= \lim_{a\to 0}\frac{1-2e^{-as}+e^{-2as}}{a^2 s} = \lim_{a\to 0}\frac{\dfrac{d}{da}(1-2e^{-as}+e^{-2as})}{\dfrac{d}{da}(a^2 s)}\\ &= \lim_{a\to 0}\frac{2se^{-as} - 2se^{-2as}}{2as} = \lim_{a\to 0}\frac{e^{-as}-e^{-2as}}{a}\\ &= \lim_{a\to 0}\frac{\dfrac{d}{da}(e^{-as}-e^{-2as})}{\dfrac{d}{da}(a)} = \lim_{a\to 0}\frac{-se^{-as}+2se^{-2as}}{1}\\ &= -s + 2s = s\end{aligned}$$

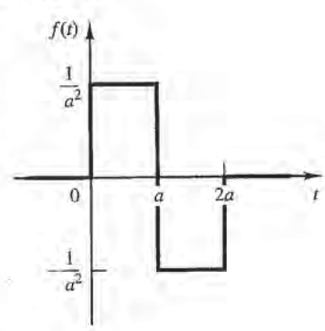

Figure 2–3
Function $f(t)$.

PETITIONER'S EXHIBIT 1002
US PATENT NO. 6,581,565
Page 9842

A–2–5. Find the initial value of $df(t)/dt$ when the Laplace transform of $f(t)$ is given by

$$F(s) = \mathscr{L}[f(t)] = \frac{2s+1}{s^2+s+1}$$

Solution. Using the initial-value theorem,

$$\lim_{t\to 0+} f(t) = f(0+) = \lim_{s\to\infty} sF(s) = \lim_{s\to\infty} \frac{s(2s+1)}{s^2+s+1} = 2$$

Since the $\mathscr{L}_+$ transform of $df(t)/dt = g(t)$ is given by

$$\begin{aligned}\mathscr{L}_+[g(t)] &= sF(s) - f(0+)\\ &= \frac{s(2s+1)}{s^2+s+1} - 2 = \frac{-s-2}{s^2+s+1}\end{aligned}$$

the initial value of $df(t)/dt$ is obtained as

$$\begin{aligned}\lim_{t\to 0+} \frac{df(t)}{dt} &= g(0+) = \lim_{s\to\infty} s[sF(s) - f(0+)]\\ &= \lim_{s\to\infty} \frac{-s^2-2s}{s^2+s+1} = -1\end{aligned}$$

A–2–6. The derivative of the unit-impulse function $\delta(t)$ is called a *unit-doublet* function. (Thus, the integral of the unit-doublet function is the unit-impulse function.) Mathematically, an example of the unit-doublet function, which is usually denoted by $u_2(t)$, may be given by

$$u_2(t) = \lim_{t_0\to 0} \frac{1(t) - 2[1(t-t_0)] + 1(t-2t_0)}{t_0^2}$$

Obtain the Laplace transform of $u_2(t)$.

Solution. The Laplace transform of $u_2(t)$ is given by

$$\begin{aligned}\mathscr{L}[u_2(t)] &= \lim_{t_0\to 0} \frac{1}{t_0^2}\left(\frac{1}{s} - \frac{2}{s}e^{-t_0 s} + \frac{1}{s}e^{-2t_0 s}\right)\\ &= \lim_{t_0\to 0} \frac{1}{t_0^2 s}\left[1 - 2\left(1 - t_0 s + \frac{t_0^2 s^2}{2} + \cdots\right) + \left(1 - 2t_0 s + \frac{4t_0^2 s^2}{2} + \cdots\right)\right]\\ &= \lim_{t_0\to 0} \frac{1}{t_0^2 s}\left[t_0^2 s^2 + (\text{higher-order terms in } t_0 s)\right] = s\end{aligned}$$

A–2–7. Find the Laplace transform of $f(t)$ defined by

$$\begin{aligned}f(t) &= 0, && \text{for } t < 0\\ &= t^2 \sin\omega t, && \text{for } t \geq 0\end{aligned}$$

Solution. Since

$$\mathscr{L}[\sin\omega t] = \frac{\omega}{s^2+\omega^2}$$

applying the complex-differentiation theorem

$$\mathscr{L}[t^2 f(t)] = \frac{d^2}{ds^2} F(s)$$

PETITIONER'S EXHIBIT 1002
US PATENT NO. 6,581,565
Page 9843

to this problem, we have

$$\mathscr{L}[f(t)] = \mathscr{L}[t^2 \sin \omega t] = \frac{d^2}{ds^2}\left[\frac{\omega}{s^2 + \omega^2}\right] = \frac{-2\omega^3 + 6\omega s^2}{(s^2 + \omega^2)^3}$$

A–2–8. Prove that if $f(t)$ is of exponential order and if $\int_0^\infty f(t)\,dt$ exists [which means that $\int_0^\infty f(t)\,dt$ assumes a definite value] then

$$\int_0^\infty f(t)\,dt = \lim_{s \to 0} F(s)$$

where $F(s) = \mathscr{L}[f(t)]$.

Solution. Note that

$$\int_0^\infty f(t)\,dt = \lim_{t \to \infty} \int_0^t f(t)\,dt$$

Referring to Equation (2–9),

$$\mathscr{L}\left[\int_0^t f(t)\,dt\right] = \frac{F(s)}{s}$$

Since $\int_0^\infty f(t)\,dt$ exists, by applying the final-value theorem to this case,

$$\lim_{t \to \infty} \int_0^t f(t)\,dt = \lim_{s \to 0} s\,\frac{F(s)}{s}$$

or

$$\int_0^\infty f(t)\,dt = \lim_{s \to 0} F(s)$$

A–2–9. Prove that if $f(t)$ is a periodic function with period T, then

$$\mathscr{L}[f(t)] = \frac{\int_0^T f(t)e^{-st}\,dt}{1 - e^{-Ts}}$$

Solution.

$$\mathscr{L}[f(t)] = \int_0^\infty f(t)e^{-st}\,dt = \sum_{n=0}^{\infty} \int_{nT}^{(n+1)T} f(t)e^{-st}\,dt$$

By changing the independent variable from t to τ, where $\tau = t - nT$,

$$\mathscr{L}[f(t)] = \sum_{n=0}^{\infty} e^{-nTs} \int_0^T f(\tau)e^{-s\tau}\,d\tau$$

where we used the fact that $f(\tau + nT) = f(\tau)$ because the function $f(t)$ is periodic with period T. Noting that

$$\begin{aligned}\sum_{n=0}^{\infty} e^{-nTs} &= 1 + e^{-Ts} + e^{-2Ts} + \cdots \\ &= 1 + e^{-Ts}(1 + e^{-Ts} + e^{-2Ts} + \cdots) \\ &= 1 + e^{-Ts}\left(\sum_{n=0}^{\infty} e^{-nTs}\right)\end{aligned}$$

PETITIONER'S EXHIBIT 1002
US PATENT NO. 6,581,565
Page 9844

we obtain

$$\sum_{n=0}^{\infty} e^{-nTs} = \frac{1}{1 - e^{-Ts}}$$

It follows that

$$\mathscr{L}[f(t)] = \frac{\int_0^T f(t)e^{-st}\,dt}{1 - e^{-Ts}}$$

A–2–10. What is the Laplace transform of the periodic function shown in Figure 2–4?

Solution. Note that

$$\begin{aligned}
\int_0^T f(t)e^{-st}\,dt &= \int_0^{T/2} e^{-st}\,dt + \int_{T/2}^{T} (-1)e^{-st}\,dt \\
&= \frac{e^{-st}}{-s}\bigg|_0^{T/2} - \frac{e^{-st}}{-s}\bigg|_{T/2}^{T} \\
&= \frac{e^{-(1/2)Ts} - 1}{-s} + \frac{e^{-Ts} - e^{-(1/2)Ts}}{s} \\
&= \frac{1}{s}\left[e^{-Ts} - 2e^{-(1/2)Ts} + 1\right] \\
&= \frac{1}{s}\left[1 - e^{-(1/2)Ts}\right]^2
\end{aligned}$$

Referring to Problem A–2–9, we have

$$\begin{aligned}
F(s) &= \frac{\int_0^T f(t)e^{-st}\,dt}{1 - e^{-Ts}} = \frac{(1/s)\left[1 - e^{-(1/2)Ts}\right]^2}{1 - e^{-Ts}} \\
&= \frac{1 - e^{-(1/2)Ts}}{s\left[1 + e^{-(1/2)Ts}\right]} = \frac{1}{s}\tanh\frac{Ts}{4}
\end{aligned}$$

A–2–11. Find the inverse Laplace transform of $F(s)$, where

$$F(s) = \frac{1}{s(s^2 + 2s + 2)}$$

Solution. Since

$$s^2 + 2s + 2 = (s + 1 + j1)(s + 1 - j1)$$

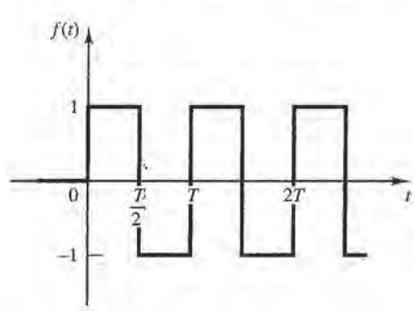

Figure 2–4
Periodic function (square wave).

PETITIONER'S EXHIBIT 1002
US PATENT NO. 6,581,565
Page 9845

we notice that $F(s)$ involves a pair of complex-conjugate poles, and so we expand $F(s)$ into the form

$$F(s) = \frac{1}{s(s^2 + 2s + 2)} = \frac{a_1}{s} + \frac{a_2 s + a_3}{s^2 + 2s + 2}$$

where a_1, a_2, and a_3 are determined from

$$1 = a_1(s^2 + 2s + 2) + (a_2 s + a_3)s$$

By comparing coefficients of s^2, s, and s^0 terms on both sides of this last equation, respectively, we obtain

$$a_1 + a_2 = 0, \qquad 2a_1 + a_3 = 0, \qquad 2a_1 = 1$$

from which

$$a_1 = \frac{1}{2}, \qquad a_2 = -\frac{1}{2}, \qquad a_3 = -1$$

Therefore,

$$\begin{aligned} F(s) &= \frac{1}{2}\frac{1}{s} - \frac{1}{2}\frac{s+2}{s^2 + 2s + 2} \\ &= \frac{1}{2}\frac{1}{s} - \frac{1}{2}\frac{1}{(s+1)^2 + 1^2} - \frac{1}{2}\frac{s+1}{(s+1)^2 + 1^2} \end{aligned}$$

The inverse Laplace transform of $F(s)$ gives

$$f(t) = \frac{1}{2} - \frac{1}{2}e^{-t}\sin t - \frac{1}{2}e^{-t}\cos t, \qquad \text{for } t \geq 0$$

A–2–12. Obtain the inverse Laplace transform of

$$F(s) = \frac{5(s+2)}{s^2(s+1)(s+3)}$$

Solution.

$$F(s) = \frac{5(s+2)}{s^2(s+1)(s+3)} = \frac{b_1}{s} + \frac{b_2}{s^2} + \frac{a_1}{s+1} + \frac{a_2}{s+3}$$

where

$$\begin{aligned} a_1 &= \left.\frac{5(s+2)}{s^2(s+3)}\right|_{s=-1} = \frac{5}{2} \\ a_2 &= \left.\frac{5(s+2)}{s^2(s+1)}\right|_{s=-3} = \frac{5}{18} \\ b_2 &= \left.\frac{5(s+2)}{(s+1)(s+3)}\right|_{s=0} = \frac{10}{3} \\ b_1 &= \frac{d}{ds}\left[\frac{5(s+2)}{(s+1)(s+3)}\right]_{s=0} \\ &= \left.\frac{5(s+1)(s+3) - 5(s+2)(2s+4)}{(s+1)^2(s+3)^2}\right|_{s=0} = -\frac{25}{9} \end{aligned}$$

PETITIONER'S EXHIBIT 1002
US PATENT NO. 6,581,565
Page 9846

Thus

$$F(s) = -\frac{25}{9}\frac{1}{s} + \frac{10}{3}\frac{1}{s^2} + \frac{5}{2}\frac{1}{s+1} + \frac{5}{18}\frac{1}{s+3}$$

The inverse Laplace transform of $F(s)$ is

$$f(t) = -\frac{25}{9} + \frac{10}{3}t + \frac{5}{2}e^{-t} + \frac{5}{18}e^{-3t}, \qquad \text{for } t \geq 0$$

A–2–13. Find the inverse Laplace transform of

$$F(s) = \frac{s^4 + 2s^3 + 3s^2 + 4s + 5}{s(s+1)}$$

Solution. Since the numerator polynomial is of higher degree than the denominator polynomial, by dividing the numerator by the denominator until the remainder is a fraction, we obtain

$$F(s) = s^2 + s + 2 + \frac{2s+5}{s(s+1)} = s^2 + s + 2 + \frac{a_1}{s} + \frac{a_2}{s+1}$$

where

$$a_1 = \left.\frac{2s+5}{s+1}\right|_{s=0} = 5$$

$$a_2 = \left.\frac{2s+5}{s}\right|_{s=-1} = -3$$

It follows that

$$F(s) = s^2 + s + 2 + \frac{5}{s} - \frac{3}{s+1}$$

The inverse Laplace transform of $F(s)$ is

$$f(t) = \mathscr{L}^{-1}[F(s)] = \frac{d^2}{dt^2}\delta(t) + \frac{d}{dt}\delta(t) + 2\delta(t) + 5 - 3e^{-t}, \qquad \text{for } t \geq 0-$$

A–2–14. Derive the inverse Laplace transform of

$$F(s) = \frac{1}{s(s^2 + \omega^2)}$$

Solution.

$$F(s) = \frac{1}{s(s^2+\omega^2)} = \frac{1}{\omega^2}\frac{1}{s} - \frac{1}{\omega^2}\frac{s}{s^2+\omega^2}$$

Hence the inverse Laplace transform of $F(s)$ is obtained as

$$f(t) = \mathscr{L}^{-1}[F(s)] = \frac{1}{\omega^2}(1 - \cos\omega t), \qquad \text{for } t \geq 0$$

A–2–15. Obtain the inverse Laplace transform of the following $F(s)$. [Use MATLAB to find the partial-fraction expansion of $F(s)$.]

$$F(s) = \frac{s^5 + 8s^4 + 23s^3 + 35s^2 + 28s + 3}{s^3 + 6s^2 + 8s}$$

PETITIONER'S EXHIBIT 1002
US PATENT NO. 6,581,565
Page 9847

Solution. The following MATLAB program will produce the partial-fraction expansion of $F(s)$:

```
num = [1  8  23  35  28  3];
den = [0  0  1  6  8  0];
[r,p,k] = residue(num,den)

r =

    0.3750
    0.2500
    0.3750

p =

     -4
     -2
      0

k =

    1  2  3
```

Note that k = [1 2 3] means that $F(s)$ involves $s^2 + 2s + 3$ as shown below:

$$F(s) = s^2 + 2s + 3 + \frac{0.375}{s+4} + \frac{0.25}{s+2} + \frac{0.375}{s}$$

Hence, the inverse Laplace transform of $F(s)$ is given by

$$f(t) = \frac{d^2}{dt^2}\delta(t) + 2\frac{d}{dt}\delta(t) + 3\delta(t) + 0.375e^{-4t} + 0.25e^{-2t} + 0.375, \qquad \text{for } t \geq 0-$$

A–2–16. Given the zero(s), pole(s), and gain K of $B(s)/A(s)$, obtain the function $B(s)/A(s)$ using MATLAB. Consider the three cases below.

(1) There is no zero. Poles are at $-1 + 2j$ and $-1 - 2j$. $K = 10$.

(2) A zero is at 0. Poles are at $-1 + 2j$ and $-1 - 2j$. $K = 10$.

(3) A zero is at -1. Poles are at $-2, -4$ and -8. $K = 12$.

Solution. MATLAB programs to obtain $B(s)/A(s)$ = num/den for the three cases are shown below.

```
z = [];
p = [-1+2*j; -1-2*j];
K = 10;
[num,den] = zp2tf(z,p,K);
printsys(num,den)

num/den =

        10
  s^2 + 2s + 5
```

```
z = [0];
p = [-1+2*j; -1-2*j];
K = 10;
[num,den] = zp2tf(z,p,K);
printsys(num,den)

num/den =

        10s
  s^2 + 2s + 5
```

```
z = [-1];
p = [-2; -4; -8];
K = 12;
[num,den] = zp2tf(z,p,K);
printsys(num,den)

num/den =

        12s + 12
  s^3 + 14s^2 + 56s + 64
```


PETITIONER'S EXHIBIT 1002
US PATENT NO. 6,581,565
Page 9848

A–2–17. Solve the following differential equation:

$$\ddot{x} + 2\dot{x} + 10x = t^2, \qquad x(0) = 0, \qquad \dot{x}(0) = 0$$

Solution. Noting that the initial conditions are zeros, the Laplace transform of the equation becomes as follows:

$$s^2X(s) + 2sX(s) + 10X(s) = \frac{2}{s^3}$$

Hence

$$X(s) = \frac{2}{s^3(s^2 + 2s + 10)}$$

We need to find the partial-fraction expansion of $X(s)$. Since the denominator involves a triple pole, it is simpler to use MATLAB to obtain the partial-fraction expansion. The following MATLAB program may be used:

```
num = [0 0 0 0 0 2];
den = [1 2 10 0 0 0];
[r,p,k] = residue(num,den)

r =

    0.0060- 0.0087i
    0.0060+ 0.0087i
   -0.0120
   -0.0400
    0.2000

p =

   -1.0000+ 3.0000i
   -1.0000- 3.0000i
    0
    0
    0

k =

    []
```

From the MATLAB output, we find

$$X(s) = \frac{0.006 - 0.0087j}{s + 1 - 3j} + \frac{0.006 + 0.0087j}{s + 1 + 3j} + \frac{-0.012}{s} + \frac{-0.04}{s^2} + \frac{0.2}{s^3}$$

Combining the first two terms on the right-hand side of the equation, we get

$$X(s) = \frac{0.012(s + 1) + 0.0522}{(s + 1)^2 + 3^2} - \frac{0.012}{s} - \frac{0.04}{s^2} + \frac{0.2}{s^3}$$

The inverse Laplace transform of $X(s)$ gives

$$x(t) = 0.012e^{-t}\cos 3t + 0.0174e^{-t}\sin 3t - 0.012 - 0.04t + 0.1t^2, \qquad \text{for } t \geq 0$$

PETITIONER'S EXHIBIT 1002
US PATENT NO. 6,581,565
Page 9849

PROBLEMS

B–2–1. Find the Laplace transforms of the following functions:

(a) $f_1(t) = 0, \quad \text{for } t < 0$

$\quad = e^{-0.4t}\cos 12t, \quad \text{for } t \geq 0$

(b) $f_2(t) = 0, \quad \text{for } t < 0$

$\quad = \sin\left(4t + \frac{\pi}{3}\right), \quad \text{for } t \geq 0$

B–2–2. Find the Laplace transforms of the following functions:

(a) $f_1(t) = 0, \quad \text{for } t < 0$

$\quad = 3\sin(5t + 45°), \quad \text{for } t \geq 0$

(b) $f_2(t) = 0, \quad \text{for } t < 0$

$\quad = 0.03(1 - \cos 2t), \quad \text{for } t \geq 0$

B–2–3. Obtain the Laplace transform of the function defined by

$$f(t) = 0, \quad \text{for } t < 0$$
$$= t^2 e^{-at}, \quad \text{for } t \geq 0$$

B–2–4. Obtain the Laplace transforms of the following functions:

(a) $f(t) = 0, \quad \text{for } t < 0$

$\quad = \sin\omega t \cdot \cos\omega t, \quad \text{for } t \geq 0$

(b) $f(t) = 0, \quad \text{for } t < 0$

$\quad = te^{-t}\sin 5t, \quad \text{for } t \geq 0$

B–2–5. Obtain the Laplace transform of the function defined by

$$f(t) = 0, \quad \text{for } t < 0$$
$$= \cos 2\omega t \cdot \cos 3\omega t, \quad \text{for } t \geq 0$$

B–2–6. What is the Laplace transform of the function $f(t)$ shown in Figure 2–5?

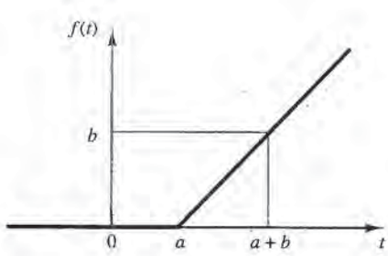

Figure 2–5
Function $f(t)$.

B–2–7. Obtain the Laplace transform of the function $f(t)$ shown in Figure 2–6.

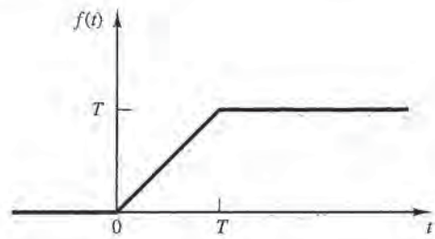

Figure 2–6
Function $f(t)$

B–2–8. Find the Laplace transform of the function $f(t)$ shown in Figure 2–7. Also, find the limiting value of $\mathscr{L}[f(t)]$ as a approaches zero.

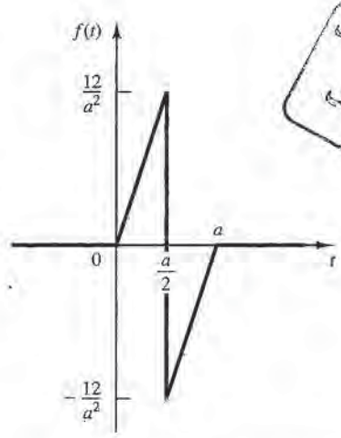

کتابخانه دانشگاه علم و صنعت ایران
واحد اوین

Figure 2–7
Function $f(t)$.

B–2–9. By applying the final-value theorem, find the final value of $f(t)$ whose Laplace transform is given by

$$F(s) = \frac{10}{s(s+1)}$$

Verify this result by taking the inverse Laplace transform of $F(s)$ and letting $t \to \infty$.

B–2–10. Given

$$F(s) = \frac{1}{(s+2)^2}$$

determine the values of $f(0+)$ and $\dot{f}(0+)$. (Use the initial-value theorem.)

PETITIONER'S EXHIBIT 1002
US PATENT NO. 6,581,565
Page 9850

B–2–11. Find the inverse Laplace transform of

$$F(s) = \frac{s+1}{s(s^2+s+1)}$$

B–2–12. Obtain the inverse Laplace transform of the following function:

$$F(s) = \frac{5e^{-s}}{s+1}$$

B–2–13. Find the inverse Laplace transforms of the following functions:

(a) $$F_1(s) = \frac{6s+3}{s^2}$$

(b) $$F_2(s) = \frac{5s+2}{(s+1)(s+2)^2}$$

B–2–14. Find the inverse Laplace transforms of the following functions:

(a) $$F_1(s) = \frac{1}{s^2(s^2+\omega^2)}$$

(b) $$F_2(s) = \frac{\omega_n^2}{s(s^2+2\zeta\omega_n s+\omega_n^2)} \qquad (0 < \zeta < 1)$$

B–2–15. Obtain the partial-fraction expansion of the following function with MATLAB:

$$F(s) = \frac{10(s+2)(s+4)}{(s+1)(s+3)(s+5)^2}$$

Then, obtain the inverse Laplace transform of $F(s)$.

B–2–16. Consider the following function $F(s)$:

$$F(s) = \frac{s^4+5s^3+6s^2+9s+30}{s^4+6s^3+21s^2+46s+30}$$

Using MATLAB, obtain the partial-fraction expansion of $F(s)$. Then, obtain the inverse Laplace transform of $F(s)$.

B–2–17. A function $B(s)/A(s)$ consists of the following zeros, poles, and gain K:

zeros at $s = -1, s = -2$
poles at $s = 0, s = -4, s = -6$
gain $K = 5$

Obtain the expression for $B(s)/A(s)$ = num/den with MATLAB.

B–2–18. What is the solution of the following differential equation?

$$2\ddot{x} + 7\dot{x} + 3x = 0, \qquad x(0) = 3, \qquad \dot{x}(0) = 0$$

B–2–19. Solve the differential equation

$$\dot{x} + 2x = \delta(t), \qquad x(0-) = 0$$

B–2–20. Solve the following differential equation:

$$\ddot{x} + 2\zeta\omega_n\dot{x} + \omega_n^2 x = 0, \qquad x(0) = a, \qquad \dot{x}(0) = b$$

where a and b are constants.

B–2–21. Obtain the solution of the differential equation

$$\dot{x} + ax = A\sin\omega t, \qquad x(0) = b$$

B–2–22. Obtain the solution of the differential equation

$$\ddot{x} + 3\dot{x} + 6x = 0, \qquad x(0) = 0, \qquad \dot{x}(0) = 3$$

B–2–23. Solve the following differential equation:

$$\ddot{x} + 2\dot{x} + 10x = e^{-t}, \qquad x(0) = 0, \qquad \dot{x}(0) = 0$$

The foreing function e^{-t} is given at $t = 0$ when the system is at rest.

PETITIONER'S EXHIBIT 1002
US PATENT NO. 6,581,565
Page 9851

3

Mathematical Modeling of Dynamic Systems

کتابخانه دانشگاه علم و صنعت ایران
واحد اراک

3-1 INTRODUCTION

In studying control systems the reader must be able to model dynamic systems and analyze dynamic characteristics. A mathematical model of a dynamic system is defined as a set of equations that represents the dynamics of the system accurately or, at least, fairly well. Note that a mathematical model is not unique to a given system. A system may be represented in many different ways and, therefore, may have many mathematical models, depending on one's perspective.

The dynamics of many systems, whether they are mechanical, electrical, thermal, economic, biological, and so on, may be described in terms of differential equations. Such differential equations may be obtained by using physical laws governing a particular system, for example, Newton's laws for mechanical systems and Kirchhoff's laws for electrical systems. We must always keep in mind that deriving reasonable mathematical models is the most important part of the entire analysis of control systems.

Throughout this book we assume that the principle of causality applies to the systems considered. This means that the current output of the system (the output at time $t = 0$) depends on the past input (the input for $t < 0$) but does not depend on the future input (the input for $t > 0$).

Mathematical Models. Mathematical models may assume many different forms. Depending on the particular system and the particular circumstances, one mathematical model may be better suited than other models. For example, in optimal control problems, it is advantageous to use state-space representations. On the other hand, for the

PETITIONER'S EXHIBIT 1002
US PATENT NO. 6,581,565
Page 9852

transient-response or frequency-response analysis of single-input-single-output, linear, time-invariant systems, the transfer function representation may be more convenient than any other. Once a mathematical model of a system is obtained, various analytical and computer tools can be used for analysis and synthesis purposes.

Simplicity Versus Accuracy. In obtaining a mathematical model, we must make a compromise between the simplicity of the model and the accuracy of the results of the analysis. In deriving a reasonably simplified mathematical model, we frequently find it necessary to ignore certain inherent physical properties of the system. In particular, if a linear lumped-parameter mathematical model (that is, one employing ordinary differential equations) is desired, it is always necessary to ignore certain nonlinearities and distributed parameters that may be present in the physical system. If the effects that these ignored properties have on the response are small, good agreement will be obtained between the results of the analysis of a mathematical model and the results of the experimental study of the physical system.

In general, in solving a new problem, it is desirable to build a simplified model so that we can get a general feeling for the solution. A more complete mathematical model may then be built and used for a more accurate analysis.

We must be well aware of the fact that a linear lumped-parameter model, which may be valid in low-frequency operations, may not be valid at sufficiently high frequencies since the neglected property of distributed parameters may become an important factor in the dynamic behavior of the system. For example, the mass of a spring may be neglected in low-frequency operations, but it becomes an important property of the system at high frequencies. (For the case where a mathematical model involves considerable errors, robust control theory may be applied.)

Linear Systems. A system is called linear if the principle of superposition applies. The principle of superposition states that the response produced by the simultaneous application of two different forcing functions is the sum of the two individual responses. Hence, for the linear system, the response to several inputs can be calculated by treating one input at a time and adding the results. It is this principle that allows one to build up complicated solutions to the linear differential equation from simple solutions.

In an experimental investigation of a dynamic system, if cause and effect are proportional, thus implying that the principle of superposition holds, then the system can be considered linear.

Linear Time-Invariant Systems and Linear Time-Varying Systems. A differential equation is linear if the coefficients are constants or functions only of the independent variable. Dynamic systems that are composed of linear time-invariant lumped-parameter components may be described by linear time-invariant (constant-coefficient) differential equations. Such systems are called *linear time-invariant* (or *linear constant-coefficient*) systems. Systems that are represented by differential equations whose coefficients are functions of time are called *linear time-varying* systems. An example of a time-varying control system is a spacecraft control system. (The mass of a spacecraft changes due to fuel consumption.)

PETITIONER'S EXHIBIT 1002
US PATENT NO. 6,581,565
Page 9853

Outline of the Chapter. Section 3–1 has presented an introduction to the mathematical modeling of dynamic systems. Section 3–2 presents the transfer function and impulse-response function. Section 3–3 introduces automatic control systems and Section 3–4 discusses concepts of modeling in state space. Section 3–5 presents state-space representation of dynamic systems. Section 3–6 discusses transformation of mathematical models with MATLAB. Section 3–7 treats mathematical modeling of mechanical systems and discusses Newton's approach to modeling mechanical systems. Section 3–8 deals with mathematical modeling of electrical and electronic systems. Section 3–9 treats signal flow graphs and Mason's gain formula useful to control systems analysis. Finally, Section 3-10 discusses linearization of nonlinear mathematical models.

3–2 TRANSFER FUNCTION AND IMPULSE-RESPONSE FUNCTION

In control theory, functions called transfer functions are commonly used to characterize the input-output relationships of components or systems that can be described by linear, time-invariant, differential equations. We begin by defining the transfer function and follow with a derivation of the transfer function of a mechanical system. Then we discuss the impulse-response function.

Transfer Function. The *transfer function* of a linear, time-invariant, differential equation system is defined as the ratio of the Laplace transform of the output (response function) to the Laplace transform of the input (driving function) under the assumption that all initial conditions are zero.

Consider the linear time-invariant system defined by the following differential equation:

$$a_0 \overset{(n)}{y} + a_1 \overset{(n-1)}{y} + \cdots + a_{n-1}\dot{y} + a_n y$$
$$= b_0 \overset{(m)}{x} + b_1 \overset{(m-1)}{x} + \cdots + b_{m-1}\dot{x} + b_m x \qquad (n \geq m)$$

where y is the output of the system and x is the input. The transfer function of this system is the ratio of the Laplace transformed output to the Laplace transformed input when all initial conditions are zero, or

$$\text{Transfer function} = G(s) = \left.\frac{\mathscr{L}[\text{output}]}{\mathscr{L}[\text{input}]}\right|_{\text{zero initial conditions}}$$
$$= \frac{Y(s)}{X(s)} = \frac{b_0 s^m + b_1 s^{m-1} + \cdots + b_{m-1}s + b_m}{a_0 s^n + a_1 s^{n-1} + \cdots + a_{n-1}s + a_n}$$

By using the concept of transfer function, it is possible to represent system dynamics by algebraic equations in s. If the highest power of s in the denominator of the transfer function is equal to n, the system is called an *nth-order system*.

Comments on Transfer Function. The applicability of the concept of the transfer function is limited to linear, time-invariant, differential equation systems. The transfer function approach, however, is extensively used in the analysis and design of such systems. In what follows, we shall list important comments concerning the transfer function. (Note that in the list a system referred to is one described by a linear, time-invariant, differential equation.)

PETITIONER'S EXHIBIT 1002
US PATENT NO. 6,581,565
Page 9854

1. The transfer function of a system is a mathematical model in that it is an operational method of expressing the differential equation that relates the output variable to the input variable.
2. The transfer function is a property of a system itself, independent of the magnitude and nature of the input or driving function.
3. The transfer function includes the units necessary to relate the input to the output; however, it does not provide any information concerning the physical structure of the system. (The transfer functions of many physically different systems can be identical.)
4. If the transfer function of a system is known, the output or response can be studied for various forms of inputs with a view toward understanding the nature of the system.
5. If the transfer function of a system is unknown, it may be established experimentally by introducing known inputs and studying the output of the system. Once established, a transfer function gives a full description of the dynamic characteristics of the system, as distinct from its physical description.

EXAMPLE 3–1 Consider the satellite attitude control system shown in Figure 3–1. The diagram shows the control of only the yaw angle θ. (In the actual system there are controls about three axes.) Small jets apply reaction forces to rotate the satellite body into the desired attitude. The two skew symmetrically placed jets denoted by A or B operate in pairs. Assume that each jet thrust is $F/2$ and a torque $T = Fl$ is applied to the system. The jets are applied for a certain time duration and thus the torque can be written as $T(t)$. The moment of inertia about the axis of rotation at the center of mass is J.

Let us obtain the transfer function of this system by assuming that torque $T(t)$ is the input, and the angular displacement $\theta(t)$ of the satellite is the output. (We consider the motion only in the plane of the page.)

To derive the transfer function, we proceed according to the following steps.

1. Write the differential equation for the system.
2. Take the Laplace transform of the differential equation, assuming all initial conditions are zero.
3. Take the ratio of the output $\Theta(s)$ to the input $T(s)$. This ratio is the transfer function.

Applying Newton's second law to the present system and noting that there is no friction in the environment of the satellite, we have

$$J\frac{d^2\theta}{dt^2} = T$$

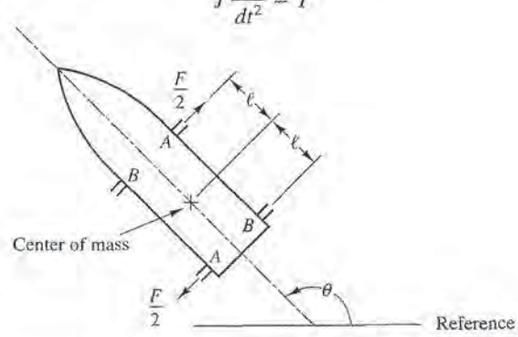

Figure 3–1 Schematic diagram of a satellite attitude control system.

PETITIONER'S EXHIBIT 1002
US PATENT NO. 6,581,565
Page 9855

Taking the Laplace transform of both sides of this last equation and assuming all initial conditions to be zero yields

$$Js^2\Theta(s) = T(s)$$

where $\Theta(s) = \mathscr{L}[\theta(t)] = T(s)$ and $T(s) = \mathscr{L}[T(t)]$. The transfer function of the system is thus obtained as

$$\text{Transfer function} = \frac{\Theta(s)}{T(s)} = \frac{1}{Js^2}$$

Convolution Integral. For a linear, time-invariant system the transfer function $G(s)$ is

$$G(s) = \frac{Y(s)}{X(s)}$$

where $X(s)$ is the Laplace transform of the input and $Y(s)$ is the Laplace transform of the output, where we assume that all initial conditions involved are zero. It follows that the output $Y(s)$ can be written as the product of $G(s)$ and $X(s)$, or

$$Y(s) = G(s)X(s) \tag{3–1}$$

Note that multiplication in the complex domain is equivalent to convolution in the time domain (see Section 2-4), so the inverse Laplace transform of Equation (3–1) is given by the following convolution integral:

$$\begin{aligned} y(t) &= \int_0^t x(\tau)g(t-\tau)\,d\tau \\ &= \int_0^t g(\tau)x(t-\tau)\,d\tau \end{aligned}$$

where both $g(t)$ and $x(t)$ are 0 for $t < 0$.

Impulse-Response Function. Consider the output (response) of a system to a unit-impulse input when the initial conditions are zero. Since the Laplace transform of the unit-impulse function is unity, the Laplace transform of the output of the system is

$$Y(s) = G(s) \tag{3–2}$$

The inverse Laplace transform of the output given by Equation (3–2) gives the impulse response of the system. The inverse Laplace transform of $G(s)$, or

$$\mathscr{L}^{-1}[G(s)] = g(t)$$

is called the impulse-response function. This function $g(t)$ is also called the weighting function of the system.

The impulse-response function $g(t)$ is thus the response of a linear system to a unit-impulse input when the initial conditions are zero. The Laplace transform of this function gives the transfer function. Therefore, the transfer function and impulse-response function of a linear, time-invariant system contain the same information about the system dynamics. It is hence possible to obtain complete information about the dynamic

PETITIONER'S EXHIBIT 1002
US PATENT NO. 6,581,565
Page 9856

characteristics of the system by exciting it with an impulse input and measuring the response. (In practice, a pulse input with a very short duration compared with the significant time constants of the system can be considered an impulse.)

3–3 AUTOMATIC CONTROL SYSTEMS

A control system may consist of a number of components. To show the functions performed by each component, in control engineering, we commonly use a diagram called the *block diagram*. This section first explains what a block diagram is. Next, it discusses introductory aspects of automatic control systems, including various control actions. Then, it presents a method for obtaining block diagrams for physical systems, and, finally, discusses techniques to simplify such diagrams.

Block Diagrams. A *block diagram* of a system is a pictorial representation of the functions performed by each component and of the flow of signals. Such a diagram depicts the interrelationships that exist among the various components. Differing from a purely abstract mathematical representation, a block diagram has the advantage of indicating more realistically the signal flows of the actual system.

In a block diagram all system variables are linked to each other through functional blocks. The *functional* block or simply *block* is a symbol for the mathematical operation on the input signal to the block that produces the output. The transfer functions of the components are usually entered in the corresponding blocks, which are connected by arrows to indicate the direction of the flow of signals. Note that the signal can pass only in the direction of the arrows. Thus a block diagram of a control system explicitly shows a unilateral property.

Figure 3–2 shows an element of the block diagram. The arrowhead pointing toward the block indicates the input, and the arrowhead leading away from the block represents the output. Such arrows are referred to as *signals*.

Note that the dimensions of the output signal from the block is the dimensions of the input signal multiplied by the dimensions of the transfer function in the block.

The advantages of the block diagram representation of a system lie in the fact that it is easy to form the overall block diagram for the entire system by merely connecting the blocks of the components according to the signal flow and that it is possible to evaluate the contribution of each component to the overall performance of the system.

In general, the functional operation of the system can be visualized more readily by examining the block diagram than by examining the physical system itself. A block diagram contains information concerning dynamic behavior, but it does not include any information on the physical construction of the system. Consequently, many dissimilar and unrelated systems can be represented by the same block diagram.

It should be noted that in a block diagram the main source of energy is not explicitly shown and that the block diagram of a given system is not unique. A number of different block diagrams can be drawn for a system, depending on the point of view of the analysis.

Figure 3–2
Element of a block diagram.

PETITIONER'S EXHIBIT 1002
US PATENT NO. 6,581,565
Page 9857

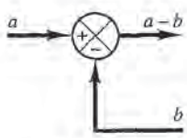

Figure 3–3
Summing point.

Summing Point. Referring to Figure 3–3, a circle with a cross is the symbol that indicates a summing operation. The plus or minus sign at each arrowhead indicates whether that signal is to be added or subtracted. It is important that the quantities being added or subtracted have the same dimensions and the same units.

Branch Point. A *branch point* is a point from which the signal from a block goes concurrently to other blocks or summing points.

Block Diagram of a Closed-Loop System. Figure 3–4 shows an example of a block diagram of a closed-loop system. The output $C(s)$ is fed back to the summing point, where it is compared with the reference input $R(s)$. The closed-loop nature of the system is clearly indicated by the figure. The output of the block, $C(s)$ in this case, is obtained by multiplying the transfer function $G(s)$ by the input to the block, $E(s)$. Any linear control system may be represented by a block diagram consisting of blocks, summing points, and branch points.

When the output is fed back to the summing point for comparison with the input, it is necessary to convert the form of the output signal to that of the input signal. For example, in a temperature-control system, the output signal is usually the controlled temperature. The output signal, which has the dimension of temperature, must be converted to a force or position or voltage before it can be compared with the input signal. This conversion is accomplished by the feedback element whose transfer function is $H(s)$, as shown in Figure 3–5. The role of the feedback element is to modify the output before it is compared with the input. (In most cases the feedback element is a sensor that measures the output of the plant. The output of the sensor is compared with the system input, and the actuating error signal is generated.) In the present example, the feedback signal that is fed back to the summing point for comparison with the input is $B(s) = H(s)C(s)$.

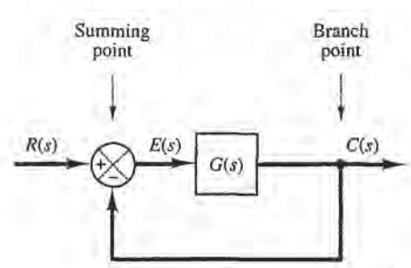

Figure 3–4
Block diagram of a closed-loop system.

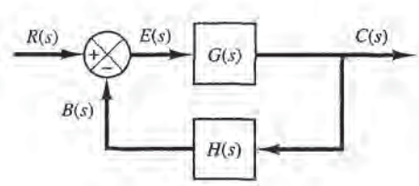

Figure 3–5
Closed-loop system.

PETITIONER'S EXHIBIT 1002
US PATENT NO. 6,581,565
Page 9858

Open-Loop Transfer Function and Feedforward Transfer Function. Referring to Figure 3–5, the ratio of the feedback signal $B(s)$ to the actuating error signal $E(s)$ is called the *open-loop transfer function*. That is,

$$\text{Open-loop transfer function} = \frac{B(s)}{E(s)} = G(s)H(s)$$

The ratio of the output $C(s)$ to the actuating error signal $E(s)$ is called the *feedforward transfer function*, so that

$$\text{Feedforward transfer function} = \frac{C(s)}{E(s)} = G(s)$$

If the feedback transfer function $H(s)$ is unity, then the open-loop transfer function and the feedforward transfer function are the same.

Closed-Loop Transfer Function. For the system shown in Figure 3–5, the output $C(s)$ and input $R(s)$ are related as follows: since

$$\begin{aligned} C(s) &= G(s)E(s) \\ E(s) &= R(s) - B(s) \\ &= R(s) - H(s)C(s) \end{aligned}$$

eliminating $E(s)$ from these equations gives

$$C(s) = G(s)[R(s) - H(s)C(s)]$$

or

$$\frac{C(s)}{R(s)} = \frac{G(s)}{1 + G(s)H(s)} \tag{3–3}$$

The transfer function relating $C(s)$ to $R(s)$ is called the *closed-loop transfer function*. This transfer function relates the closed-loop system dynamics to the dynamics of the feedforward elements and feedback elements.

From Equation (3–3), $C(s)$ is given by

$$C(s) = \frac{G(s)}{1 + G(s)H(s)} R(s)$$

Thus the output of the closed-loop system clearly depends on both the closed-loop transfer function and the nature of the input.

PETITIONER'S EXHIBIT 1002
US PATENT NO. 6,581,565
Page 9859

Obtaining Cascaded, Parallel, and Feedback (Closed-Loop) Transfer Functions with MATLAB. In control systems analysis, we frequently need to calculate the cascaded transfer functions, parallel-connected transfer functions, and feedback-connected (closed-loop) transfer functions. MATLAB has convenient commands to obtain the cascaded, parallel, and feedback (closed-loop) transfer functions.

Suppose that there are two components $G_1(s)$ and $G_2(s)$ connected differently as shown in Figure 3–6, where

$$G_1(s) = \frac{\text{num1}}{\text{den1}}, \qquad G_2(s) = \frac{\text{num2}}{\text{den2}}$$

To obtain the transfer functions of the cascaded system, parallel system, or feedback (closed-loop) system, the following commands may be used:

```
[num, den] = series(num1,den1,num2,den2)
[num, den] = parallel(num1,den1,num2,den2)
[num, den] = feedback(num1,den1,num2,den2)
```

As an example, consider the case where

$$G_1(s) = \frac{10}{s^2 + 2s + 10} = \frac{\text{num1}}{\text{den1}}, \qquad G_2(s) = \frac{5}{s + 5} = \frac{\text{num2}}{\text{den2}}$$

MATLAB Program 3–1 gives $C(s)/R(s) = \text{num}/\text{den}$ for each arrangement of $G_1(s)$ and $G_2(s)$. Note that the command

```
printsys(num,den)
```

displays the num/den [that is, the transfer function $C(s)/R(s)$] of the system considered.

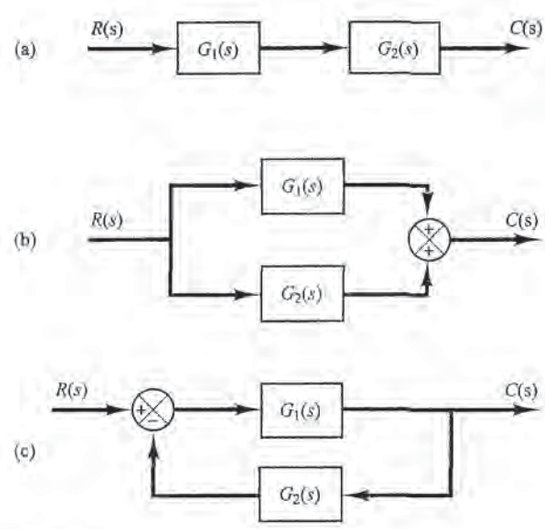

Figure 3–6
(a) Cascaded system;
(b) parallel system;
(c) feedback (closed-loop) system.

PETITIONER'S EXHIBIT 1002
US PATENT NO. 6,581,565
Page 9860

MATLAB Program 3–1

```
num1 = [0 0 10];
den1 = [1 2 10];
num2 = [0 5];
den2 = [1 5];
[num, den] = series(num1,den1,num2,den2);
printsys(num,den)

num/den =

          50
  s^3 + 7s^2 + 20s + 50

[num, den] = parallel(num1,den1,num2,den2);
printsys(num,den)

num/den =

     5s^2 + 20s + 100
  s^3 + 7s^2 + 20s + 50

[num, den] = feedback(num1,den1,num2,den2);
printsys(num,den)

num/den =

        10s + 50
  s^3 + 7s^2 + 20s + 100
```

Automatic Controllers. An automatic controller compares the actual value of the plant output with the reference input (desired value), determines the deviation, and produces a control signal that will reduce the deviation to zero or to a small value. The manner in which the automatic controller produces the control signal is called the *control action*. Figure 3–7 is a block diagram of an industrial control system, which

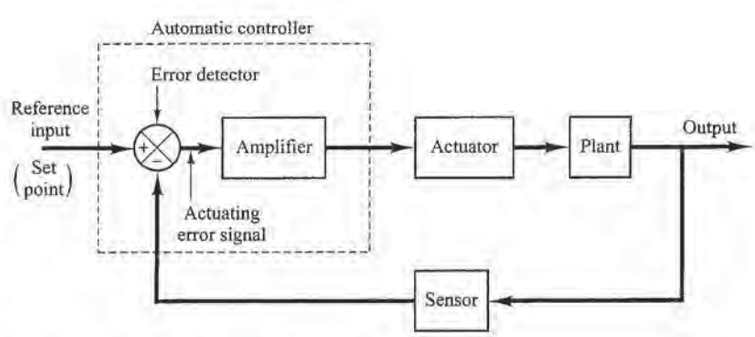

Figure 3–7
Block diagram of an industrial control system, which consists of an automatic controller, an actuator, a plant, and a sensor (measuring element).

PETITIONER'S EXHIBIT 1002
US PATENT NO. 6,581,565
Page 9861

consists of an automatic controller, an actuator, a plant, and a sensor (measuring element). The controller detects the actuating error signal, which is usually at a very low power level, and amplifies it to a sufficiently high level. The output of an automatic controller is fed to an actuator, such as an electric motor, a hydraulic motor, or a pneumatic motor or valve. (The actuator is a power device that produces the input to the plant according to the control signal so that the output signal will approach the reference input signal.)

The sensor or measuring element is a device that converts the output variable into another suitable variable, such as a displacement, pressure, or voltage, that can be used to compare the output to the reference input signal. This element is in the feedback path of the closed-loop system. The set point of the controller must be converted to a reference input with the same units as the feedback signal from the sensor or measuring element.

Classifications of Industrial Controllers. Industrial controllers may be classified according to their control actions as:

1. Two-position or on–off controllers
2. Proportional controllers
3. Integral controllers
4. Proportional-plus-integral controllers
5. Proportional-plus-derivative controllers
6. Proportional-plus-integral-plus-derivative controllers

Most industrial controllers use electricity or pressurized fluid such as oil or air as power sources. Consequently, controllers may also be classified according to the kind of power employed in the operation, such as pneumatic controllers, hydraulic controllers, or electronic controllers. What kind of controller to use must be decided based on the nature of the plant and the operating conditions, including such considerations as safety, cost, availability, reliability, accuracy, weight, and size.

Two-Position or On–Off Control Action. In a two-position control system, the actuating element has only two fixed positions, which are, in many cases, simply on and off. Two-position or on–off control is relatively simple and inexpensive and, for this reason, is very widely used in both industrial and domestic control systems.

Let the output signal from the controller be $u(t)$ and the actuating error signal be $e(t)$. In two-position control, the signal $u(t)$ remains at either a maximum or minimum value, depending on whether the actuating error signal is positive or negative, so that

$$\begin{aligned} u(t) &= U_1, \qquad \text{for } e(t) > 0 \\ &= U_2, \qquad \text{for } e(t) < 0 \end{aligned}$$

where U_1 and U_2 are constants. The minimum value U_2 is usually either zero or $-U_1$. Two-position controllers are generally electrical devices, and an electric solenoid-operated valve is widely used in such controllers. Pneumatic proportional controllers with very high gains act as two-position controllers and are sometimes called pneumatic two-position controllers.

PETITIONER'S EXHIBIT 1002
US PATENT NO. 6,581,565
Page 9862

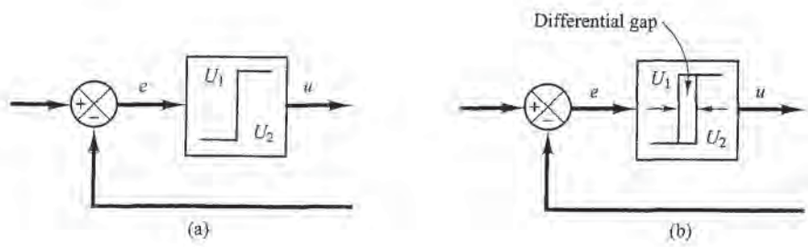

Figure 3–8
(a) Block diagram of an on–off controller; (b) block diagram of an on–off controller with differential gap.

Figures 3–8 (a) and (b) show the block diagrams for two-position or on–off controllers. The range through which the actuating error signal must move before the switching occurs is called the *differential gap*. A differential gap is indicated in Figure 3–8(b). Such a differential gap causes the controller output $u(t)$ to maintain its present value until the actuating error signal has moved slightly beyond the zero value. In some cases, the differential gap is a result of unintentional friction and lost motion; however, quite often it is intentionally provided in order to prevent too frequent operation of the on–off mechanism.

Consider the liquid-level control system shown in Figure 3–9(a), where the electromagnetic valve shown in Figure 3–9(b) is used for controlling the inflow rate. This valve is either open or closed. With this two-position control, the water inflow rate is either a positive constant or zero. As shown in Figure 3–10, the output signal continuously moves between the two limits required to cause the actuating element to move from one fixed position to the other. Notice that the output curve follows one of two exponential curves, one corresponding to the filling curve and the other to the emptying curve. Such output oscillation between two limits is a typical response characteristic of a system under two-position control.

From Figure 3–10, we notice that the amplitude of the output oscillation can be reduced by decreasing the differential gap. The decrease in the differential gap, however, increases the number of on-off switchings per minute and reduces the useful life of the component. The magnitude of the differential gap must be determined from such considerations as the accuracy required and the life of the component.

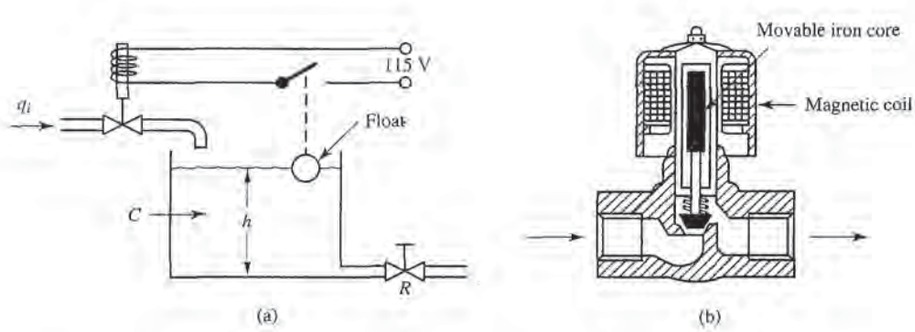

Figure 3–9
(a) Liquid-level control system; (b) electromagnetic valve.

PETITIONER'S EXHIBIT 1002
US PATENT NO. 6,581,565
Page 9863

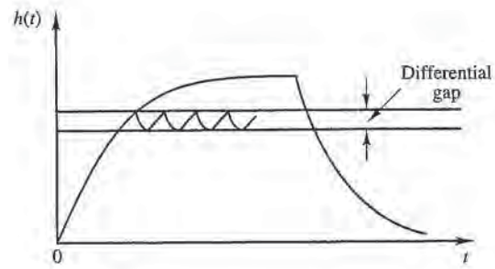

Figure 3–10
Level $h(t)$ versus t curve for the system shown in Figure 3–9(a).

Proportional Control Action. For a controller with proportional control action, the relationship between the output of the controller $u(t)$ and the actuating error signal $e(t)$ is

$$u(t) = K_p e(t)$$

or, in Laplace-transformed quantities,

$$\frac{U(s)}{E(s)} = K_p$$

where K_p is termed the proportional gain.

Whatever the actual mechanism may be and whatever the form of the operating power, the proportional controller is essentially an amplifier with an adjustable gain.

Integral Control Action. In a controller with integral control action, the value of the controller output $u(t)$ is changed at a rate proportional to the actuating error signal $e(t)$. That is,

$$\frac{du(t)}{dt} = K_i e(t)$$

or

$$u(t) = K_i \int_0^t e(t)\,dt$$

where K_i is an adjustable constant. The transfer function of the integral controller is

$$\frac{U(s)}{E(s)} = \frac{K_i}{s}$$

PETITIONER'S EXHIBIT 1002
US PATENT NO. 6,581,565
Page 9864

Proportional-Plus-Integral Control Action. The control action of a proportional-plus-integral controller is defined by

$$u(t) = K_p e(t) + \frac{K_p}{T_i}\int_0^t e(t)\,dt$$

or the transfer function of the controller is

$$\frac{U(s)}{E(s)} = K_p\left(1 + \frac{1}{T_i s}\right)$$

where T_i is called the *integral time*.

Proportional-Plus-Derivative Control Action. The control action of a proportional-plus-derivative controller is defined by

$$u(t) = K_p e(t) + K_p T_d \frac{de(t)}{dt}$$

and the transfer function is

$$\frac{U(s)}{E(s)} = K_p(1 + T_d s)$$

where T_d is called the *derivative time*.

Proportional-Plus-Integral-Plus-Derivative Control Action. The combination of proportional control action, integral control action, and derivative control action is termed proportional-plus-integral-plus-derivative control action. This combined action has the advantages of each of the three individual control actions. The equation of a controller with this combined action is given by

$$u(t) = K_p e(t) + \frac{K_p}{T_i}\int_0^t e(t)\,dt + K_p T_d \frac{de(t)}{dt}$$

or the transfer function is

$$\frac{U(s)}{E(s)} = K_p\left(1 + \frac{1}{T_i s} + T_d s\right)$$

where K_p is the proportional gain, T_i is the integral time, and T_d is the derivative time. The block diagram of a proportional-plus-integral-plus-derivative controller is shown in Figure 3–11.

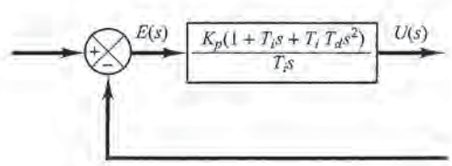

Figure 3–11
Block diagram of a proportional-plus-integral-plus-derivative controller.

PETITIONER'S EXHIBIT 1002
US PATENT NO. 6,581,565
Page 9865

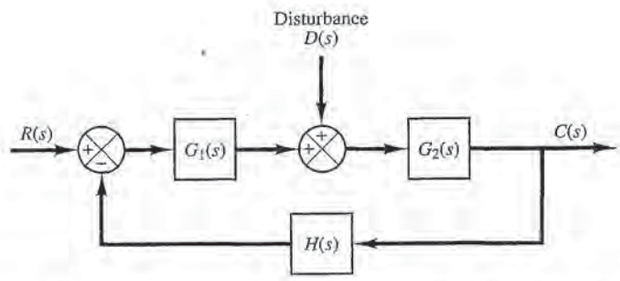

Figure 3–12
Closed-loop system subjected to a disturbance.

Closed-Loop System Subjected to a Disturbance. Figure 3–12 shows a closed-loop system subjected to a disturbance. When two inputs (the reference input and disturbance) are present in a linear system, each input can be treated independently of the other; and the outputs corresponding to each input alone can be added to give the complete output. The way each input is introduced into the system is shown at the summing point by either a plus or minus sign.

Consider the system shown in Figure 3–12. In examining the effect of the disturbance $D(s)$, we may assume that the reference input is zero; we may then calculate the response $C_D(s)$ to the disturbance only. This response can be found from

$$\frac{C_D(s)}{D(s)} = \frac{G_2(s)}{1 + G_1(s)G_2(s)H(s)}$$

On the other hand, in considering the response to the reference input $R(s)$, we may assume that the disturbance is zero. Then the response $C_R(s)$ to the reference input $R(s)$ can be obtained from

$$\frac{C_R(s)}{R(s)} = \frac{G_1(s)G_2(s)}{1 + G_1(s)G_2(s)H(s)}$$

The response to the simultaneous application of the reference input and disturbance can be obtained by adding the two individual responses. In other words, the response $C(s)$ due to the simultaneous application of the reference input $R(s)$ and disturbance $D(s)$ is given by

$$\begin{aligned} C(s) &= C_R(s) + C_D(s) \\ &= \frac{G_2(s)}{1 + G_1(s)G_2(s)H(s)}\left[G_1(s)R(s) + D(s)\right] \end{aligned}$$

Consider now the case where $|G_1(s)H(s)| \gg 1$ and $|G_1(s)G_2(s)H(s)| \gg 1$. In this case, the closed-loop transfer function $C_D(s)/D(s)$ becomes almost zero, and the effect of the disturbance is suppressed. This is an advantage of the closed-loop system.

On the other hand, the closed-loop transfer function $C_R(s)/R(s)$ approaches $1/H(s)$ as the gain of $G_1(s)G_2(s)H(s)$ increases. This means that if $|G_1(s)G_2(s)H(s)| \gg 1$ then the closed-loop transfer function $C_R(s)/R(s)$ becomes independent of $G_1(s)$ and $G_2(s)$ and becomes inversely proportional to $H(s)$ so that the variations of $G_1(s)$ and $G_2(s)$ do not affect the closed-loop transfer function $C_R(s)/R(s)$. This is another advantage of the closed-loop system. It can easily be seen that any closed-loop system with unity feedback, $H(s) = 1$, tends to equalize the input and output.

PETITIONER'S EXHIBIT 1002
US PATENT NO. 6,581,565
Page 9866

Procedures for Drawing a Block Diagram. To draw a block diagram for a system, first write the equations that describe the dynamic behavior of each component. Then take the Laplace transforms of these equations, assuming zero initial conditions, and represent each Laplace-transformed equation individually in block form. Finally, assemble the elements into a complete block diagram.

As an example, consider the *RC* circuit shown in Figure 3–13(a). The equations for this circuit are

$$i = \frac{e_i - e_o}{R} \tag{3–4}$$

$$e_o = \frac{\int i\,dt}{C} \tag{3–5}$$

The Laplace transforms of Equations (3–4) and (3–5), with zero initial condition, become

$$I(s) = \frac{E_i(s) - E_o(s)}{R} \tag{3–6}$$

$$E_o(s) = \frac{I(s)}{Cs} \tag{3–7}$$

Equation (3–6) represents a summing operation, and the corresponding diagram is shown in Figure 3–13(b). Equation (3–7) represents the block as shown in Figure 3–13(c). Assembling these two elements, we obtain the overall block diagram for the system as shown in Figure 3–13(d).

Block Diagram Reduction. It is important to note that blocks can be connected in series only if the output of one block is not affected by the next following block. If there are any loading effects between the components, it is necessary to combine these components into a single block.

Any number of cascaded blocks representing nonloading components can be replaced by a single block, the transfer function of which is simply the product of the individual transfer functions.

A complicated block diagram involving many feedback loops can be simplified by a step-by-step rearrangement. Simplification of the block diagram by rearrangements

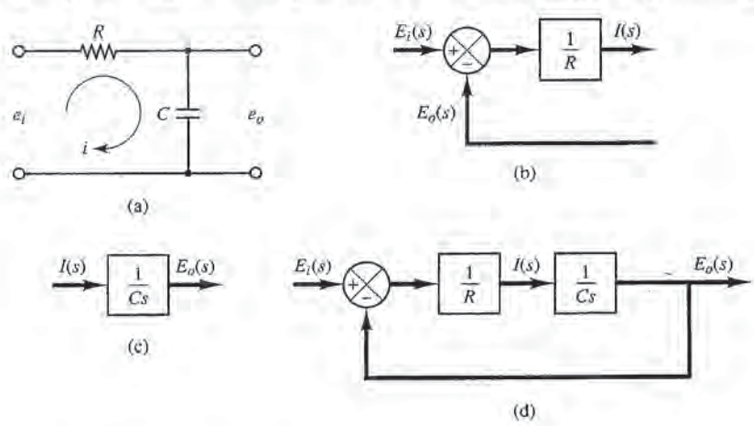

Figure 3–13
(a) *RC* circuit;
(b) block diagram representing Equation (3–6);
(c) block diagram representing Equation (3–7);
(d) block diagram of the *RC* circuit.

PETITIONER'S EXHIBIT 1002
US PATENT NO. 6,581,565
Page 9867

considerably reduces the labor needed for subsequent mathematical analysis. It should be noted, however, that as the block diagram is simplified the transfer functions in new blocks become more complex because new poles and new zeros are generated.

In simplifying a block diagram, remember the following.

1. The product of the transfer functions in the feedforward direction must remain the same.
2. The product of the transfer functions around the loop must remain the same.

EXAMPLE 3–2 Consider the system shown in Figure 3–14(a). Simplify this diagram.

By moving the summing point of the negative feedback loop containing H_2 outside the positive feedback loop containing H_1, we obtain Figure 3–10(b). Eliminating the positive feedback loop,

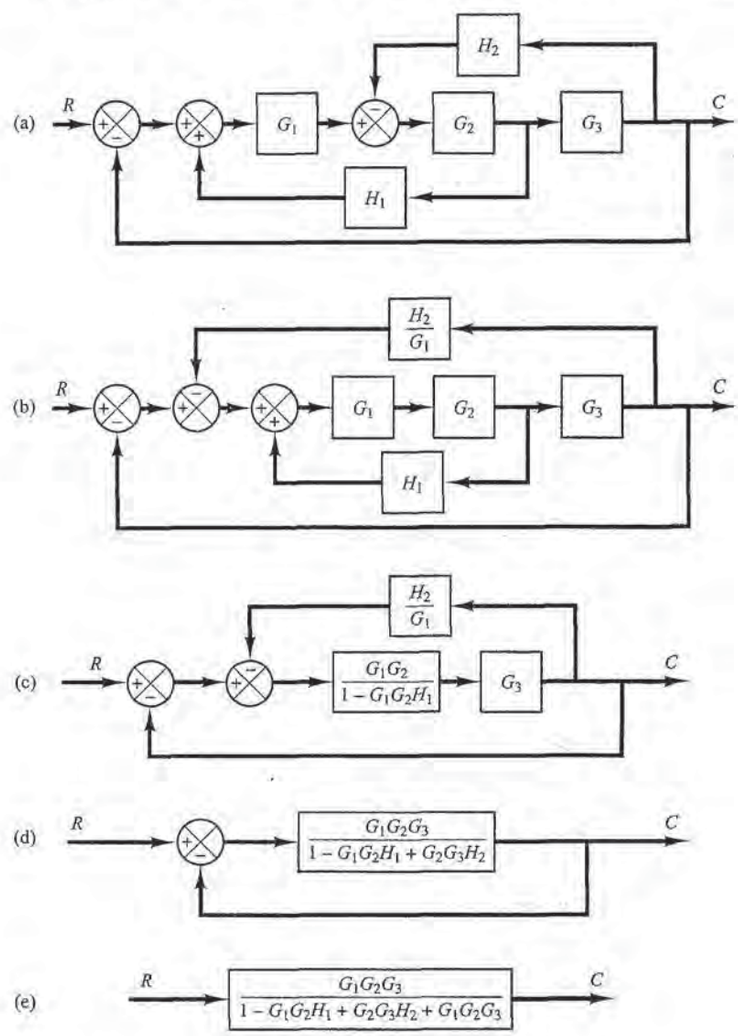

Figure 3–14
(a) Multiple-loop system;
(b)–(e) successive reductions of the block diagram shown in (a).

PETITIONER'S EXHIBIT 1002
US PATENT NO. 6,581,565
Page 9868

we have Figure 3–14(c). The elimination of the loop containing H_2/G_1 gives Figure 3–14(d). Finally, eliminating the feedback loop results in Figure 3–14(e).

Notice that the numerator of the closed-loop transfer function $C(s)/R(s)$ is the product of the transfer functions of the feedforward path. The denominator of $C(s)/R(s)$ is equal to

$$1 - \sum \text{(product of the transfer functions around each loop)}$$

$$= 1 - (G_1G_2H_1 - G_2G_3H_2 - G_1G_2G_3)$$

$$= 1 - G_1G_2H_1 + G_2G_3H_2 + G_1G_2G_3$$

(The positive feedback loop yields a negative term in the denominator.)

3–4 MODELING IN STATE SPACE

In this section we shall present introductory material on state-space analysis of control systems.

Modern Control Theory. The modern trend in engineering systems is toward greater complexity, due mainly to the requirements of complex tasks and good accuracy. Complex systems may have multiple inputs and multiple outputs and may be time varying. Because of the necessity of meeting increasingly stringent requirements on the performance of control systems, the increase in system complexity, and easy access to large scale computers, modern control theory, which is a new approach to the analysis and design of complex control systems, has been developed since around 1960. This new approach is based on the concept of state. The concept of state by itself is not new since it has been in existence for a long time in the field of classical dynamics and other fields.

Modern Control Theory Versus Conventional Control Theory. Modern control theory is contrasted with conventional control theory in that the former is applicable to multiple-input-multiple-output systems, which may be linear or nonlinear, time invariant or time varying, while the latter is applicable only to linear time-invariant single-input-single-output systems. Also, modern control theory is essentially a time-domain approach, while conventional control theory is a complex frequency-domain approach. Before we proceed further, we must define state, state variables, state vector, and state space.

State. The state of a dynamic system is the smallest set of variables (called *state variables*) such that the knowledge of these variables at $t = t_0$, together with the knowledge of the input for $t \geq t_0$, completely determines the behavior of the system for any time $t \geq t_0$.

Note that the concept of state is by no means limited to physical systems. It is applicable to biological systems, economic systems, social systems, and others.

State Variables. The state variables of a dynamic system are the variables making up the smallest set of variables that determine the state of the dynamic system. If at

PETITIONER'S EXHIBIT 1002
US PATENT NO. 6,581,565
Page 9869

least n variables $x_1, x_2, \ldots, x_n$ are needed to completely describe the behavior of a dynamic system (so that once the input is given for $t \geq t_0$ and the initial state at $t = t_0$ is specified, the future state of the system is completely determined), then such n variables are a set of state variables.

Note that state variables need not be physically measurable or observable quantities. Variables that do not represent physical quantities and those that are neither measurable nor observable can be chosen as state variables. Such freedom in choosing state variables is an advantage of the state-space methods. Practically, however, it is convenient to choose easily measurable quantities for the state variables, if this is possible at all, because optimal control laws will require the feedback of all state variables with suitable weighting.

State Vector. If n state variables are needed to completely describe the behavior of a given system, then these n state variables can be considered the n components of a vector $\mathbf{x}$. Such a vector is called a *state vector*. A state vector is thus a vector that determines uniquely the system state $\mathbf{x}(t)$ for any time $t \geq t_0$, once the state at $t = t_0$ is given and the input $u(t)$ for $t \geq t_0$ is specified.

State Space. The n-dimensional space whose coordinate axes consist of the x_1 axis, x_2 axis, $\ldots$, x_n axis, where $x_1, x_2, \ldots, x_n$ are state variables; is called a *state space*. Any state can be represented by a point in the state space.

State-Space Equations. In state-space analysis we are concerned with three types of variables that are involved in the modeling of dynamic systems: input variables, output variables, and state variables. As we shall see in Section 3–5, the state-space representation for a given system is not unique, except that the number of state variables is the same for any of the different state-space representations of the same system.

The dynamic system must involve elements that memorize the values of the input for $t \geq t_1$. Since integrators in a continuous-time control system serve as memory devices, the outputs of such integrators can be considered as the variables that define the internal state of the dynamic system. Thus the outputs of integrators serve as state variables. The number of state variables to completely define the dynamics of the system is equal to the number of integrators involved in the system.

Assume that a multiple-input–multiple-output system involves n integrators. Assume also that there are r inputs $u_1(t), u_2(t), \ldots, u_r(t)$ and m outputs $y_1(t), y_2(t), \ldots, y_m(t)$. Define n outputs of the integrators as state variables: $x_1(t), x_2(t), \ldots, x_n(t)$ Then the system may be described by

$$\begin{aligned}
\dot{x}_1(t) &= f_1(x_1, x_2, \ldots, x_n; u_1, u_2, \ldots, u_r; t) \\
\dot{x}_2(t) &= f_2(x_1, x_2, \ldots, x_n; u_1, u_2, \ldots, u_r; t) \\
&\vdots \\
\dot{x}_n(t) &= f_n(x_1, x_2, \ldots, x_n; u_1, u_2, \ldots, u_r; t)
\end{aligned} \tag{3–8}$$

PETITIONER'S EXHIBIT 1002
US PATENT NO. 6,581,565
Page 9870

The outputs $y_1(t), y_2(t), \ldots, y_m(t)$ of the system may be given by

$$\begin{aligned} y_1(t) &= g_1(x_1, x_2, \ldots, x_n; u_1, u_2, \ldots, u_r; t) \\ y_2(t) &= g_2(x_1, x_2, \ldots, x_n; u_1, u_2, \ldots, u_r; t) \\ &\cdot \\ &\cdot \\ &\cdot \\ y_m(t) &= g_m(x_1, x_2, \ldots, x_n; u_1, u_2, \ldots, u_r; t) \end{aligned} \tag{3–9}$$

If we define

$$\mathbf{x}(t) = \begin{bmatrix} x_1(t) \\ x_2(t) \\ \cdot \\ \cdot \\ \cdot \\ x_n(t) \end{bmatrix}, \quad \mathbf{f}(\mathbf{x}, \mathbf{u}, t) = \begin{bmatrix} f_1(x_1, x_2, \ldots, x_n; u_1, u_2, \ldots, u_r; t) \\ f_2(x_1, x_2, \ldots, x_n; u_1, u_2, \ldots, u_r; t) \\ \cdot \\ \cdot \\ \cdot \\ f_n(x_1, x_2, \ldots, x_n; u_1, u_2, \ldots, u_r; t) \end{bmatrix},$$

$$\mathbf{y}(t) = \begin{bmatrix} y_1(t) \\ y_2(t) \\ \cdot \\ \cdot \\ \cdot \\ y_m(t) \end{bmatrix}, \quad \mathbf{g}(\mathbf{x}, \mathbf{u}, t) = \begin{bmatrix} g_1(x_1, x_2, \ldots, x_n; u_1, u_2, \ldots, u_r; t) \\ g_2(x_1, x_2, \ldots, x_n; u_1, u_2, \ldots, u_r; t) \\ \cdot \\ \cdot \\ \cdot \\ g_m(x_1, x_2, \ldots, x_n; u_1, u_2, \ldots, u_r; t) \end{bmatrix}, \quad \mathbf{u}(t) = \begin{bmatrix} u_1(t) \\ u_2(t) \\ \cdot \\ \cdot \\ \cdot \\ u_r(t) \end{bmatrix}$$

then Equations (3–8) and (3–9) become

$$\dot{\mathbf{x}}(t) = \mathbf{f}(\mathbf{x}, \mathbf{u}, t) \tag{3–10}$$

$$\mathbf{y}(t) = \mathbf{g}(\mathbf{x}, \mathbf{u}, t) \tag{3–11}$$

where Equation (3–10) is the state equation and Equation (3–11) is the output equation. If vector functions **f** and/or **g** involve time t explicitly, then the system is called a time-varying system.

If Equations (3–10) and (3–11) are linearized about the operating state, then we have the following linearized state equation and output equation:

$$\dot{\mathbf{x}}(t) = \mathbf{A}(t)\mathbf{x}(t) + \mathbf{B}(t)\mathbf{u}(t) \tag{3–12}$$

$$\mathbf{y}(t) = \mathbf{C}(t)\mathbf{x}(t) + \mathbf{D}(t)\mathbf{u}(t) \tag{3–13}$$

where $\mathbf{A}(t)$ is called the state matrix, $\mathbf{B}(t)$ the input matrix, $\mathbf{C}(t)$ the output matrix, and $\mathbf{D}(t)$ the direct transmission matrix. (Details of linearization of nonlinear systems about the operating state are discussed in Section 3–10.) A block diagram representation of Equations (3–12) and (3–13) is shown in Figure 3–15.

PETITIONER'S EXHIBIT 1002
US PATENT NO. 6,581,565
Page 9871

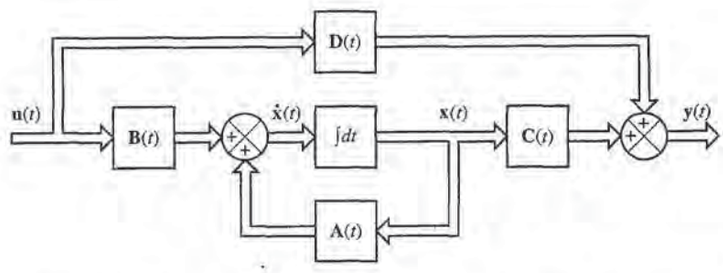

Figure 3–15
Block diagram of the linear, continuous-time control system represented in state space.

If vector functions **f** and **g** do not involve time t explicitly then the system is called a time-invariant system. In this case, Equations (3–12) and (3–13) can be simplified to

$$\dot{\mathbf{x}}(t) = \mathbf{A}\mathbf{x}(t) + \mathbf{B}\mathbf{u}(t) \tag{3–14}$$

$$\dot{\mathbf{y}}(t) = \mathbf{C}\mathbf{x}(t) + \mathbf{D}\mathbf{u}(t) \tag{3–15}$$

Equation (3–14) is the state equation of the linear, time-invariant system.

Equation (3–15) is the output equation for the same system. In this book we shall be concerned mostly with systems described by Equations (3–14) and (3–15).

In what follows we shall present an example for deriving a state equation and output equation.

EXAMPLE 3–3 Consider the mechanical system shown in Figure 3–16. We assume that the system is linear. The external force $u(t)$ is the input to the system, and the displacement $y(t)$ of the mass is the output. The displacement $y(t)$ is measured from the equilibrium position in the absence of the external force. This system is a single-input–single-output system.

From the diagram, the system equation is

$$m\ddot{y} + b\dot{y} + ky = u \tag{3–16}$$

This system is of second order. This means that the system involves two integrators. Let us define state variables $x_1(t)$ and $x_2(t)$ as

$$x_1(t) = y(t)$$
$$x_2(t) = \dot{y}(t)$$

Then we obtain

$$\dot{x}_1 = x_2$$
$$\dot{x}_2 = \frac{1}{m}(-ky - b\dot{y}) + \frac{1}{m}u$$

or

$$\dot{x}_1 = x_2 \tag{3–17}$$

$$\dot{x}_2 = -\frac{k}{m}x_1 - \frac{b}{m}x_2 + \frac{1}{m}u \tag{3–18}$$

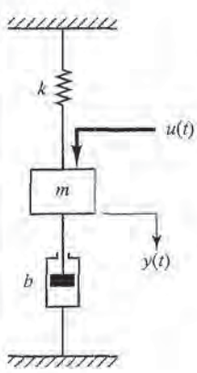

Figure 3–16
Mechanical system.

The output equation is

$$y = x_1 \tag{3–19}$$

In a vector-matrix form, Equations (3–17) and (3–18) can be written as

$$\begin{bmatrix} \dot{x}_1 \\ \dot{x}_2 \end{bmatrix} = \begin{bmatrix} 0 & 1 \\ -\dfrac{k}{m} & -\dfrac{b}{m} \end{bmatrix} \begin{bmatrix} x_1 \\ x_2 \end{bmatrix} + \begin{bmatrix} 0 \\ \dfrac{1}{m} \end{bmatrix} u \tag{3–20}$$

PETITIONER'S EXHIBIT 1002
US PATENT NO. 6,581,565
Page 9872

The output equation, Equation (3–19), can be written as

$$y = [1 \quad 0]\begin{bmatrix} x_1 \\ x_2 \end{bmatrix} \tag{3–21}$$

Equation (3–20) is a state equation and Equation (3–21) is an output equation for the system. Equations (3–20) and (3–21) are in the standard form:

$$\dot{\mathbf{x}} = \mathbf{A}\mathbf{x} + \mathbf{B}u$$
$$y = \mathbf{C}\mathbf{x} + Du$$

where

$$\mathbf{A} = \begin{bmatrix} 0 & 1 \\ -\dfrac{k}{m} & -\dfrac{b}{m} \end{bmatrix}, \quad \mathbf{B} = \begin{bmatrix} 0 \\ \dfrac{1}{m} \end{bmatrix}, \quad \mathbf{C} = [1 \quad 0], \quad D = 0$$

Figure 3–17 is a block diagram for the system. Notice that the outputs of the integrators are state variables.

Correlation Between Transfer Functions and State-Space Equations. In what follows we shall show how to derive the transfer function of a single-input–single-output system from the state-space equations.

Let us consider the system whose transfer function is given by

$$\frac{Y(s)}{U(s)} = G(s) \tag{3–22}$$

This system may be represented in state space by the following equations:

$$\dot{\mathbf{x}} = \mathbf{A}\mathbf{x} + \mathbf{B}u \tag{3–23}$$

$$y = \mathbf{C}\mathbf{x} + Du \tag{3–24}$$

where $\mathbf{x}$ is the state vector, u is the input, and y is the output. The Laplace transforms of Equations (3–23) and (3–24) are given by

$$s\mathbf{X}(s) - \mathbf{x}(0) = \mathbf{A}\mathbf{X}(s) + \mathbf{B}U(s) \tag{3–25}$$

$$Y(s) = \mathbf{C}\mathbf{X}(s) + DU(s) \tag{3–26}$$

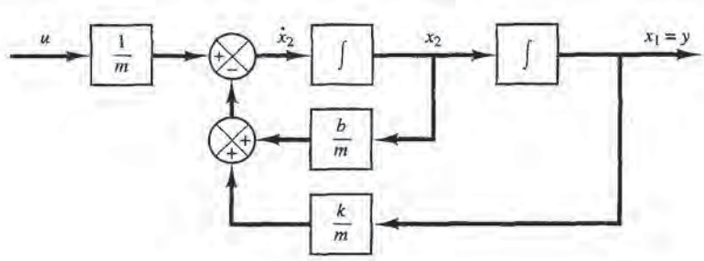

Figure 3–17
Block diagram of the mechanical system shown in Figure 3–16.

PETITIONER'S EXHIBIT 1002
US PATENT NO. 6,581,565
Page 9873

Since the transfer function was previously defined as the ratio of the Laplace transform of the output to the Laplace transform of the input when the initial conditions were zero, we set $\mathbf{x}(0)$ in Equation (3–25) to be zero. Then we have

$$s\mathbf{X}(s) - \mathbf{A}\mathbf{X}(s) = \mathbf{B}U(s)$$

or

$$(s\mathbf{I} - \mathbf{A})\mathbf{X}(s) = \mathbf{B}U(s)$$

By premultiplying $(s\mathbf{I} - \mathbf{A})^{-1}$ to both sides of this last equation, we obtain

$$\mathbf{X}(s) = (s\mathbf{I} - \mathbf{A})^{-1}\mathbf{B}U(s) \tag{3–27}$$

By substituting Equation (3–27) into Equation (3–26), we get

$$Y(s) = [\mathbf{C}(s\mathbf{I} - \mathbf{A})^{-1}\mathbf{B} + D]U(s) \tag{3–28}$$

Upon comparing Equation (3–28) with Equation (3–22), we see that

$$G(s) = \mathbf{C}(s\mathbf{I} - \mathbf{A})^{-1}\mathbf{B} + D \tag{3–29}$$

This is the transfer-function expression of the system in terms of $\mathbf{A}$, $\mathbf{B}$, $\mathbf{C}$, and D.

Note that the right-hand side of Equation (3–29) involves $(s\mathbf{I} - \mathbf{A})^{-1}$. Hence $G(s)$ can be written as

$$G(s) = \frac{Q(s)}{|s\mathbf{I} - \mathbf{A}|}$$

where $Q(s)$ is a polynomial in s. Therefore, $|s\mathbf{I} - \mathbf{A}|$ is equal to the characteristic polynomial of $G(s)$. In other words, the eigenvalues of $\mathbf{A}$ are identical to the poles of $G(s)$.

EXAMPLE 3–4 Consider again the mechanical system shown in Figure 3–16. State-space equations for the system are given by Equations (3–20) and (3–21). We shall obtain the transfer function for the system from the state-space equations.

By substituting $\mathbf{A}$, $\mathbf{B}$, $\mathbf{C}$, and D into Equation (3–29), we obtain

$$\begin{aligned} G(s) &= \mathbf{C}(s\mathbf{I} - \mathbf{A})^{-1}\mathbf{B} + D \\ &= [1 \quad 0]\left\{\begin{bmatrix} s & 0 \\ 0 & s \end{bmatrix} - \begin{bmatrix} 0 & 1 \\ -\dfrac{k}{m} & -\dfrac{b}{m} \end{bmatrix}\right\}^{-1}\begin{bmatrix} 0 \\ \dfrac{1}{m} \end{bmatrix} + 0 \\ &= [1 \quad 0]\begin{bmatrix} s & -1 \\ \dfrac{k}{m} & s + \dfrac{b}{m} \end{bmatrix}^{-1}\begin{bmatrix} 0 \\ \dfrac{1}{m} \end{bmatrix} \end{aligned}$$

Since

$$\begin{bmatrix} s & -1 \\ \dfrac{k}{m} & s + \dfrac{b}{m} \end{bmatrix}^{-1} = \frac{1}{s^2 + \dfrac{b}{m}s + \dfrac{k}{m}}\begin{bmatrix} s + \dfrac{b}{m} & 1 \\ -\dfrac{k}{m} & s \end{bmatrix}$$

PETITIONER'S EXHIBIT 1002
US PATENT NO. 6,581,565
Page 9874

we have

$$G(s) = [1 \quad 0]\frac{1}{s^2 + \frac{b}{m}s + \frac{k}{m}}\begin{bmatrix} s + \frac{b}{m} & 1 \\ -\frac{k}{m} & s \end{bmatrix}\begin{bmatrix} 0 \\ \frac{1}{m} \end{bmatrix}$$

$$= \frac{1}{ms^2 + bs + k}$$

which is the transfer function of the system. The same transfer function can be obtained from Equation (3–16).

Transfer Matrix. Next, consider a multiple-input–multiple-output system. Assume that there are r inputs $u_1, u_2, \ldots, u_r$, and m outputs $y_1, y_2, \ldots, y_m$. Define

$$\mathbf{y} = \begin{bmatrix} y_1 \\ y_2 \\ \cdot \\ \cdot \\ \cdot \\ y_m \end{bmatrix}, \qquad \mathbf{u} = \begin{bmatrix} u_1 \\ u_2 \\ \cdot \\ \cdot \\ \cdot \\ u_r \end{bmatrix}$$

The transfer matrix $\mathbf{G}(s)$ relates the output $\mathbf{Y}(s)$ to the input $\mathbf{U}(s)$, or

$$\mathbf{Y}(s) = \mathbf{G}(s)\mathbf{U}(s)$$

where $\mathbf{G}(s)$ is given by

$$\mathbf{G}(s) = \mathbf{C}(s\mathbf{I} - \mathbf{A})^{-1}\mathbf{B} + \mathbf{D}$$

[The derivation for this equation is the same as that for Equation (3–29).] Since the input vector $\mathbf{u}$ is r dimensional and the output vector $\mathbf{y}$ is m dimensional, the transfer matrix $\mathbf{G}(s)$ is an $m \times r$ matrix.

3–5 STATE-SPACE REPRESENTATION OF DYNAMIC SYSTEMS

A dynamic system consisting of a finite number of lumped elements may be described by ordinary differential equations in which time is the independent variable. By use of vector-matrix notation, an nth-order differential equation may be expressed by a first-order vector-matrix differential equation. If n elements of the vector are a set of state variables, then the vector-matrix differential equation is a *state* equation. In this section we shall present methods for obtaining state-space representations of continuous-time systems.

State-Space Representation of nth-Order Systems of Linear Differential Equations in which the Forcing Function Does Not Involve Derivative Terms. Consider the following nth-order system:

$$\overset{(n)}{y} + a_1\overset{(n-1)}{y} + \cdots + a_{n-1}\dot{y} + a_n y = u \tag{3–30}$$

Noting that the knowledge of $y(0), \dot{y}(0), \ldots, \overset{(n-1)}{y}(0)$, together with the input $u(t)$ for $t \geq 0$, determines completely the future behavior of the system, we may take

PETITIONER'S EXHIBIT 1002
US PATENT NO. 6,581,565
Page 9875

$y(t), \dot{y}(t), \ldots, \overset{(n-1)}{y}(t)$ as a set of n state variables. (Mathematically, such a choice of state variables is quite convenient. Practically, however, because higher-order derivative terms are inaccurate, due to the noise effects inherent in any practical situations, such a choice of the state variables may not be desirable.)

Let us define

$$\begin{aligned} x_1 &= y \\ x_2 &= \dot{y} \\ &\vdots \\ x_n &= \overset{(n-1)}{y} \end{aligned}$$

Then Equation (3–30) can be written as

$$\begin{aligned} \dot{x}_1 &= x_2 \\ \dot{x}_2 &= x_3 \\ &\vdots \\ \dot{x}_{n-1} &= x_n \\ \dot{x}_n &= a_n x_1 - \cdots - a_1 x_n + u \end{aligned}$$

or

$$\dot{\mathbf{x}} = \mathbf{A}\mathbf{x} + \mathbf{B}u \tag{3–31}$$

where

$$\mathbf{x} = \begin{bmatrix} x_1 \\ x_2 \\ \vdots \\ x_n \end{bmatrix}, \quad \mathbf{A} = \begin{bmatrix} 0 & 1 & 0 & \cdots & 0 \\ 0 & 0 & 1 & \cdots & 0 \\ \vdots & \vdots & \vdots & & \vdots \\ 0 & 0 & 0 & \cdots & 1 \\ -a_n & -a_{n-1} & -a_{n-2} & \cdots & -a_1 \end{bmatrix}, \quad \mathbf{B} = \begin{bmatrix} 0 \\ 0 \\ \vdots \\ 0 \\ 1 \end{bmatrix}$$

The output can be given by

$$y = [1 \quad 0 \quad \cdots \quad 0] \begin{bmatrix} x_1 \\ x_2 \\ \vdots \\ x_n \end{bmatrix}$$

PETITIONER'S EXHIBIT 1002
US PATENT NO. 6,581,565
Page 9876

or

$$y = \mathbf{C}\mathbf{x} \tag{3–32}$$

where

$$\mathbf{C} = [1 \quad 0 \quad \cdots \quad 0]$$

[Note that D in Equation (3–24) is zero.] The first-order differential equation, Equation (3–31), is the state equation, and the algebraic equation, Equation (3–32), is the output equation.

Note that the state-space representation for the transfer function system

$$\frac{Y(s)}{U(s)} = \frac{1}{s^n + a_1 s^{n-1} + \cdots + a_{n-1}s + a_n}$$

is given also by Equation (3–31) and (3–32).

State-Space Representation of *n*th Order Systems of Linear Differential Equations in which the Forcing Function Involves Derivative Terms. Consider the differential equation system that involves derivatives of the forcing function, such as

$$\overset{(n)}{y} + a_1 \overset{(n-1)}{y} + \cdots + a_{n-1}\dot{y} + a_n y = b_0 \overset{(n)}{u} + b_1 \overset{(n-1)}{u} + \cdots + b_{n-1}\dot{u} + b_n u \tag{3–33}$$

The main problem in defining the state variables for this case lies in the derivative terms. The state variables must be such that they will eliminate the derivatives of u in the state equation.

One way to obtain a state equation and output equation is to define the following n variables as a set of n state variables:

$$\begin{aligned}
x_1 &= y - \beta_0 u \\
x_2 &= \dot{y} - \beta_0 \dot{u} - \beta_1 u = \dot{x}_1 - \beta_1 u \\
x_3 &= \ddot{y} - \beta_0 \ddot{u} - \beta_1 \dot{u} - \beta_2 u = \dot{x}_2 - \beta_2 u \\
&\;\;\vdots \\
x_n &= \overset{(n-1)}{y} - \beta_0 \overset{(n-1)}{u} - \beta_1 \overset{(n-2)}{u} - \cdots - \beta_{n-2}\dot{u} - \beta_{n-1} u = \dot{x}_{n-1} - \beta_{n-1} u
\end{aligned} \tag{3–34}$$

where $\beta_0, \beta_1, \beta_2, \ldots, \beta_n$ are determined from

$$\begin{aligned}
\beta_0 &= b_0 \\
\beta_1 &= b_1 - a_1\beta_0 \\
\beta_2 &= b_2 - a_1\beta_1 - a_2\beta_0 \\
\beta_3 &= b_3 - a_1\beta_2 - a_2\beta_1 - a_3\beta_0 \\
&\;\;\vdots \\
\beta_n &= b_n - a_1\beta_{n-1} - \cdots - a_{n-1}\beta_1 - a_n\beta_0
\end{aligned} \tag{3–35}$$

PETITIONER'S EXHIBIT 1002
US PATENT NO. 6,581,565
Page 9877

With this choice of state variables the existence and uniqueness of the solution of the state equation is guaranteed. (Note that this is not the only choice of a set of state variables.) With the present choice of state variables, we obtain

$$
\begin{aligned}
\dot{x}_1 &= x_2 + \beta_1 u \\
\dot{x}_2 &= x_3 + \beta_2 u \\
&\cdot \\
&\cdot \\
&\cdot \\
\dot{x}_{n-1} &= x_n + \beta_{n-1} u \\
\dot{x} &= -a_n x_1 - a_{n-1} x_2 - \cdots - a_1 x_n + \beta_n u
\end{aligned}
\tag{3–36}
$$

[To derive Equation (3–36), see Problem **A–3–6**.] In terms of vector-matrix equations, Equation (3–36) and the output equation can be written as

$$
\begin{bmatrix} \dot{x}_1 \\ \dot{x}_2 \\ \cdot \\ \cdot \\ \cdot \\ \dot{x}_{n-1} \\ \dot{x}_n \end{bmatrix}
=
\begin{bmatrix}
0 & 1 & 0 & \cdots & 0 \\
0 & 0 & 1 & \cdots & 0 \\
\cdot & \cdot & \cdot & & \cdot \\
\cdot & \cdot & \cdot & & \cdot \\
\cdot & \cdot & \cdot & & \cdot \\
0 & 0 & 0 & \cdots & 1 \\
-a_n & -a_{n-1} & -a_{n-2} & \cdots & -a_1
\end{bmatrix}
\begin{bmatrix} x_1 \\ x_2 \\ \cdot \\ \cdot \\ \cdot \\ x_{n-1} \\ x_n \end{bmatrix}
+
\begin{bmatrix} \beta_1 \\ \beta_2 \\ \cdot \\ \cdot \\ \cdot \\ \beta_{n-1} \\ \beta_n \end{bmatrix} u
$$

$$
y = \begin{bmatrix} 1 & 0 & \cdots & 0 \end{bmatrix}
\begin{bmatrix} x_1 \\ x_2 \\ \cdot \\ \cdot \\ \cdot \\ x_n \end{bmatrix} + \beta_0 u
$$

or

$$\dot{\mathbf{x}} = \mathbf{A}\mathbf{x} + \mathbf{B}u \tag{3–37}$$

$$y = \mathbf{C}\mathbf{x} + Du \tag{3–38}$$

PETITIONER'S EXHIBIT 1002
US PATENT NO. 6,581,565
Page 9878

where

$$\mathbf{x} = \begin{bmatrix} x_1 \\ x_2 \\ \cdot \\ \cdot \\ \cdot \\ x_{n-1} \\ x_n \end{bmatrix}, \qquad \mathbf{A} = \begin{bmatrix} 0 & 1 & 0 & \cdots & 0 \\ 0 & 0 & 1 & \cdots & 0 \\ \cdot & \cdot & \cdot & & \cdot \\ \cdot & \cdot & \cdot & & \cdot \\ \cdot & \cdot & \cdot & & \cdot \\ 0 & 0 & 0 & \cdots & 1 \\ -a_n & -a_{n-1} & -a_{n-2} & \cdots & -a_1 \end{bmatrix}$$

$$\mathbf{B} = \begin{bmatrix} \beta_1 \\ \beta_2 \\ \cdot \\ \cdot \\ \cdot \\ \beta_{n-1} \\ \beta_n \end{bmatrix}, \qquad \mathbf{C} = [1 \quad 0 \quad \cdots \quad 0], \qquad D = \beta_0 = b_0$$

In this state-space representation, matrices **A** and **C** are exactly the same as those for the system of Equation (3–30). The derivatives on the right-hand side of Equation (3–33) affect only the elements of the **B** matrix.

Note that the state-space representation for the transfer function

$$\frac{Y(s)}{U(s)} = \frac{b_0 s^n + b_1 s^{n-1} + \cdots + b_{n-1} s + b_n}{s^n + a_1 s^{n-1} + \cdots + a_{n-1} s + a_n}$$

is given also by Equations (3–37) and (3–38).

There are many ways to obtain state-space representations of systems. Some of them are presented in this chapter. Methods for obtaining canonical representations of systems in state space (such as controllable canonical form, observable canonical form, diagonal canonical form, and Jordan canonical form) are presented in Chapter 11.

MATLAB can be used to obtain state-space representations of systems from transfer function representations, and vice versa. This subject is presented in Section 3-6.

EXAMPLE 3–5 Consider the spring-mass-dashpot system mounted on a massless cart as shown in Figure 3–18. A dashpot is a device that provides viscous friction, or damping. It consists of a piston and oil-filled cylinder. Any relative motion between the piston rod and the cylinder is resisted by the oil because the oil must flow around the piston (or through orifices provided in the piston) from one side of the piston to the other. The dashpot essentially absorbs energy. This absorbed energy is dissipated as heat, and the dashpot does not store any kinetic or potential energy. The dashpot is also called a *damper*.

Let us obtain mathematical models of this system by assuming that the cart is standing still for $t < 0$ and the spring-mass-dashpot system on the cart is also standing still for $t < 0$. In this system, $u(t)$ is the displacement of the cart and is the input to the system. At $t = 0$, the cart is moved at a constant speed, or $\dot{u}$ = constant. The displacement $y(t)$ of the mass is the output. (The displacement is relative to the ground.) In this system, m denotes the mass, b denotes the viscous friction coefficient, and k denotes the spring constant. We assume that the friction force of the dashpot

0093

PETITIONER'S EXHIBIT 1002
US PATENT NO. 6,581,565
Page 9879

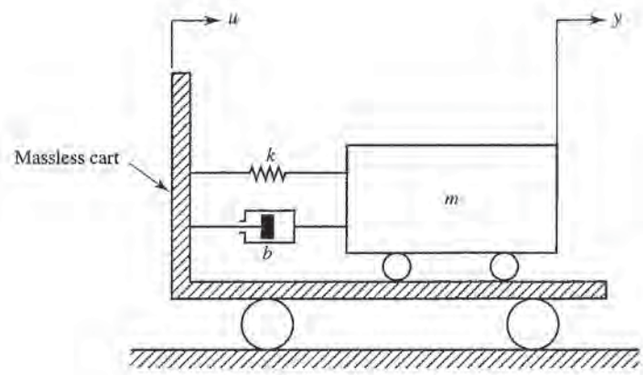

Figure 3–18
Spring-mass-dashpot system mounted on a cart.

is proportional to $\dot{y} - \dot{u}$ and that the spring is a linear spring; that is, the spring force is proportional to $y - u$.

For translational systems, Newton's second law states that

$$ma = \sum F$$

where m is a mass, a is the acceleration of the mass, and $\sum F$ is the sum of the forces acting on the mass in the direction of the acceleration a. Applying Newton's second law to the present system and noting that the cart is massless, we obtain

$$m\frac{d^2y}{dt^2} = -b\left(\frac{dy}{dt} - \frac{du}{dt}\right) - k(y - u)$$

or

$$m\frac{d^2y}{dt^2} + b\frac{dy}{dt} + ky = b\frac{du}{dt} + ku$$

This equation represents a mathematical model of the system considered. Taking the Laplace transform of this last equation, assuming zero initial condition, gives

$$(ms^2 + bs + k)Y(s) = (bs + k)U(s)$$

Taking the ratio of $Y(s)$ to $U(s)$, we find the transfer function of the system to be

$$\text{Transfer function} = G(s) = \frac{Y(s)}{U(s)} = \frac{bs + k}{ms^2 + bs + k}$$

Such a transfer function representation of a mathematical model is used very frequently in control engineering.

Next we shall obtain a state-space model of this system. We shall first compare the differential equation for this system

$$\ddot{y} + \frac{b}{m}\dot{y} + \frac{k}{m}y = \frac{b}{m}\dot{u} + \frac{k}{m}u$$

PETITIONER'S EXHIBIT 1002
US PATENT NO. 6,581,565
Page 9880

with the standard form

$$\ddot{y} + a_1\dot{y} + a_2 y = b_0\ddot{u} + b_1\dot{u} + b_2 u$$

and identify a_1, a_2, b_0, b_1, and b_2 as follows:

$$a_1 = \frac{b}{m}, \qquad a_2 = \frac{k}{m}, \qquad b_0 = 0, \qquad b_1 = \frac{b}{m}, \qquad b_2 = \frac{k}{m}$$

Referring to Equation (3–35), we have

$$\beta_0 = b_0 = 0$$

$$\beta_1 = b_1 - a_1\beta_0 = \frac{b}{m}$$

$$\beta_2 = b_2 - a_1\beta_1 - a_2\beta_0 = \frac{k}{m} - \left(\frac{b}{m}\right)^2$$

Then, referring to Equation (3–34), define

$$x_1 = y - \beta_0 u = y$$

$$x_2 = \dot{x}_1 - \beta_1 u = \dot{x}_1 - \frac{b}{m}u$$

From Equation (3–36) we have

$$\dot{x}_1 = x_2 + \beta_1 u = x_2 + \frac{b}{m}u$$

$$\dot{x}_2 = -a_2 x_1 - a_1 x_2 + \beta_2 u = -\frac{k}{m}x_1 - \frac{b}{m}x_2 + \left[\frac{k}{m} - \left(\frac{b}{m}\right)^2\right]u$$

and the output equation becomes

$$y = x_1$$

or

$$\begin{bmatrix} \dot{x}_1 \\ \dot{x}_2 \end{bmatrix} = \begin{bmatrix} 0 & 1 \\ -\frac{k}{m} & -\frac{b}{m} \end{bmatrix}\begin{bmatrix} x_1 \\ x_2 \end{bmatrix} + \begin{bmatrix} \frac{b}{m} \\ \frac{k}{m} - \left(\frac{b}{m}\right)^2 \end{bmatrix}u \tag{3–39}$$

and

$$y = \begin{bmatrix} 1 & 0 \end{bmatrix}\begin{bmatrix} x_1 \\ x_2 \end{bmatrix} \tag{3–40}$$

Equations (3–39) and (3–40) give a state-space representation of the system. (Note that this is not the only state-space representation. There are infinitely many state-space representations for the system.)

PETITIONER'S EXHIBIT 1002
US PATENT NO. 6,581,565
Page 9881

3-6 TRANSFORMATION OF MATHEMATICAL MODELS WITH MATLAB

MATLAB is quite useful to transform the system model from transfer function to state space, and vice versa. We shall begin our discussion with transformation from transfer function to state space.

Let us write the closed-loop transfer function as

$$\frac{Y(s)}{U(s)} = \frac{\text{numerator polynomial in } s}{\text{denominator polynomial in } s} = \frac{\text{num}}{\text{den}}$$

Once we have this transfer-function expression, the MATLAB command

```
[A, B, C, D] = tf2ss(num,den)
```

will give a state-space representation. It is important to note that the state-space representation for any system is not unique. There are many (infinitely many) state-space representations for the same system. The MATLAB command gives one possible such state-space representation.

Transformation From Transfer Function to State Space. Consider the transfer function system

$$\frac{Y(s)}{U(s)} = \frac{s}{(s+10)(s^2+4s+16)}$$

$$= \frac{s}{s^3+14s^2+56s+160} \tag{3-41}$$

There are many (infinitely many) possible state-space representations for this system. One possible state-space representation is

$$\begin{bmatrix} \dot{x}_1 \\ \dot{x}_2 \\ \dot{x}_3 \end{bmatrix} = \begin{bmatrix} 0 & 1 & 0 \\ 0 & 0 & 1 \\ -160 & -56 & -14 \end{bmatrix} \begin{bmatrix} x_1 \\ x_2 \\ x_3 \end{bmatrix} + \begin{bmatrix} 0 \\ 1 \\ -14 \end{bmatrix} u$$

$$y = \begin{bmatrix} 1 & 0 & 0 \end{bmatrix} \begin{bmatrix} x_1 \\ x_2 \\ x_3 \end{bmatrix} + [0]u$$

Another possible state-space representation (among infinitely many alternatives) is

$$\begin{bmatrix} \dot{x}_1 \\ \dot{x}_2 \\ \dot{x}_3 \end{bmatrix} = \begin{bmatrix} -14 & -56 & -160 \\ 1 & 0 & 0 \\ 0 & 1 & 0 \end{bmatrix} \begin{bmatrix} x_1 \\ x_2 \\ x_3 \end{bmatrix} + \begin{bmatrix} 1 \\ 0 \\ 0 \end{bmatrix} u \tag{3-42}$$

$$y = \begin{bmatrix} 0 & 1 & 0 \end{bmatrix} \begin{bmatrix} x_1 \\ x_2 \\ x_3 \end{bmatrix} + [0]u \tag{3-43}$$

PETITIONER'S EXHIBIT 1002
US PATENT NO. 6,581,565
Page 9882

MATLAB transforms the transfer function given by Equation (3–41) into the state-space representation given by Equations (3–42) and (3–43). For the example system considered here, MATLAB Program 3–2 will produce matrices **A**, **B**, **C**, and *D*.

MATLAB Program 3–2

```
num = [0   0   1   0];
den = [1   14   56   160];
[A,B,C,D] = tf2ss(num,den)

A =

   -14   -56  -160
     1     0     0
     0     1     0

B =

     1
     0
     0

C =

     0     1     0

D =

     0
```

Transformation From State Space to Transfer Function. To obtain the transfer function from state-space equations, use the following command:

```
[num,den] = ss2tf(A,B,C,D,iu)
```

iu must be specified for systems with more than one input. For example, if the system has three inputs ($u1$, $u2$, $u3$), then iu must be either 1, 2, or 3, where 1 implies $u1$, 2 implies $u2$, and 3 implies $u3$.

If the system has only one input, then either

```
[num,den] = ss2tf(A,B,C,D)
```

or

```
[num,den] = ss2tf(A,B,C,D,1)
```

may be used. For the case where the system has multiple inputs and multiple outputs, see Problem **A–3–13**.

PETITIONER'S EXHIBIT 1002
US PATENT NO. 6,581,565
Page 9883

EXAMPLE 3–6 Obtain the transfer function of the system defined by the following state-space equations:

$$\begin{bmatrix} \dot{x}_1 \\ \dot{x}_2 \\ \dot{x}_3 \end{bmatrix} = \begin{bmatrix} 0 & 1 & 0 \\ 0 & 0 & 1 \\ -5 & -25 & -5 \end{bmatrix} \begin{bmatrix} x_1 \\ x_2 \\ x_3 \end{bmatrix} + \begin{bmatrix} 0 \\ 25 \\ -120 \end{bmatrix} u$$

$$y = \begin{bmatrix} 1 & 0 & 0 \end{bmatrix} \begin{bmatrix} x_1 \\ x_2 \\ x_3 \end{bmatrix}$$

MATLAB Program 3-3 will produce the transfer function for the given system. The transfer function obtained is given by

$$\frac{Y(s)}{U(s)} = \frac{25s + 5}{s^3 + 5s^2 + 25s + 5}$$

MATLAB Program 3–3

```
A = [0  1  0;  0  0  1;  -5  -25  -5];
B = [0; 25; -120];
C = [1  0   0];
D = [0];
[num,den] = ss2tf(A,B,C,D)

num =

   0  0.0000  25.0000  5.0000

den

   1.0000  5.0000  25.0000  5.0000

% ***** The same result can be obtained by entering the following command: *****

[num,den] = ss2tf(A,B,C,D,1)

num =

   0  0.0000  25.0000  5.0000

den =

   1.0000  5.0000  25.0000  5.0000
```

3–7 MECHANICAL SYSTEMS

In this section we shall discuss mathematical modeling of mechanical systems. The fundamental law governing mechanical systems is Newton's second law. It can be applied to any mechanical system. In this section we shall derive mathematical models of three mechanical systems. (Mathematical models of additional mechanical systems will be derived and analyzed throughout the remaining chapters.)

PETITIONER'S EXHIBIT 1002
US PATENT NO. 6,581,565
Page 9884

EXAMPLE 3–7 Obtain the transfer functions $X_1(s)/U(s)$ and $X_2(s)/U(s)$ of the mechanical system shown in Figure 3–19.

The equations of motion for the system shown in Figure 3–19 are

$$m_1\ddot{x}_1 = -k_1x_1 - k_2(x_1 - x_2) - b(\dot{x}_1 - \dot{x}_2) + u$$

$$m_2\ddot{x}_2 = -k_3x_2 - k_2(x_2 - x_1) - b(\dot{x}_2 - \dot{x}_1)$$

Simplifying, we obtain

$$m_1\ddot{x}_1 + b\dot{x}_1 + (k_1 + k_2)x_1 = b\dot{x}_2 + k_2x_2 + u$$

$$m_2\ddot{x}_2 + b\dot{x}_2 + (k_2 + k_3)x_2 = b\dot{x}_1 + k_2x_1$$

Taking the Laplace transforms of these two equations, assuming zero initial conditions, we obtain

$$[m_1s^2 + bs + (k_1 + k_2)]X_1(s) = (bs + k_2)X_2(s) + U(s) \tag{3–44}$$

$$[m_2s^2 + bs + (k_2 + k_3)]X_2(s) = (bs + k_2)X_1(s) \tag{3–45}$$

Solving Equation (3–45), for $X_2(s)$ and substituting it into Equation (3–44) and simplifying, we get

$$[(m_1s^2 + bs + k_1 + k_2)(m_2s^2 + bs + k_2 + k_3) - (bs + k_2)^2]X_1(s)$$
$$= (m_2s^2 + bs + k_2 + k_3)U(s)$$

from which we obtain

$$\frac{X_1(s)}{U(s)} = \frac{m_2s^2 + bs + k_2 + k_3}{(m_1s^2 + bs + k_1 + k_2)(m_2s^2 + bs + k_2 + k_3) - (bs + k_2)^2} \tag{3–46}$$

From Equations (3–45) and (3–46) we have

$$\frac{X_2(s)}{U(s)} = \frac{bs + k_2}{(m_1s^2 + bs + k_1 + k_2)(m_2s^2 + bs + k_2 + k_3) - (bs + k_2)^2} \tag{3–47}$$

Equations (3–46) and (3–47) are the transfer functions $X_1(s)/U(s)$ and $X_2(s)/U(s)$, respectively.

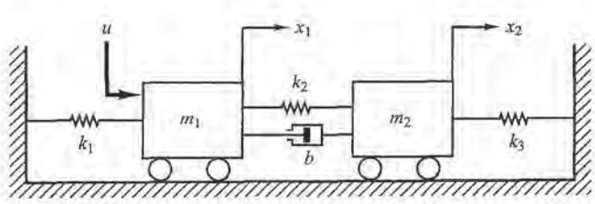

Figure 3–19
Mechanical system.

EXAMPLE 3–8 An inverted pendulum mounted on a motor-driven cart is shown in Figure 3–20(a). This is a model of the attitude control of a space booster on takeoff. (The objective of the attitude control problem is to keep the space booster in a vertical position.) The inverted pendulum is unstable in that it may fall over any time in any direction unless a suitable control force is applied. Here we consider

PETITIONER'S EXHIBIT 1002
US PATENT NO. 6,581,565
Page 9885

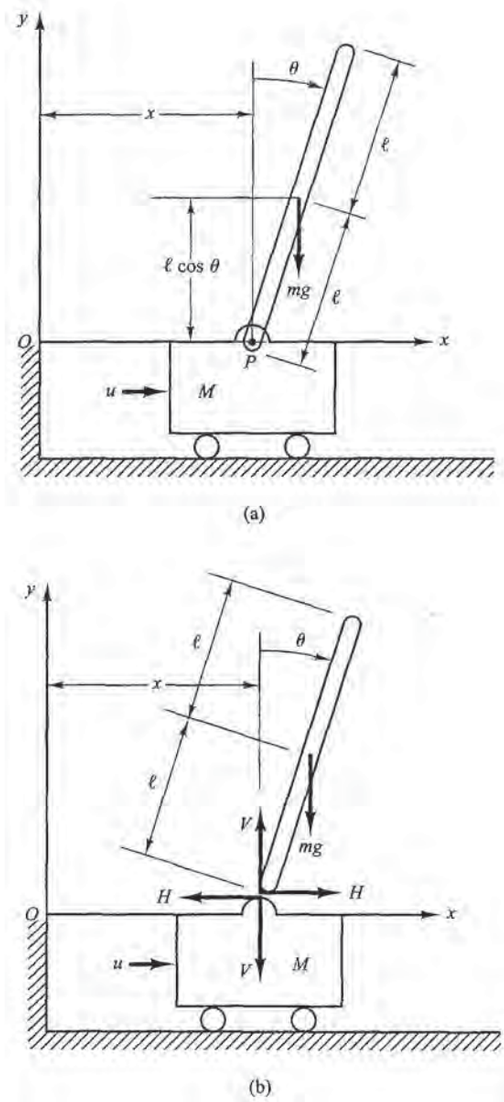

Figure 3–20
(a) Inverted pendulum system; (b) free-body diagram.

only a two-dimensional problem in which the pendulum moves only in the plane of the page. The control force u is applied to the cart. Assume that the center of gravity of the pendulum rod is at its geometric center. Obtain a mathematical model for the system.

Define the angle of the rod from the vertical line as θ. Define also the (x, y) coordinates of the center of gravity of the pendulum rod as (x_G, y_G). Then

$$x_G = x + l \sin\theta$$

$$y_G = l \cos\theta$$

PETITIONER'S EXHIBIT 1002
US PATENT NO. 6,581,565
Page 9886

To derive the equations of motion for the system, consider the free-body diagram shown in Figure 3–20(b). The rotational motion of the pendulum rod about its center of gravity can be described by

$$I\ddot{\theta} = Vl\sin\theta - Hl\cos\theta \tag{3–48}$$

where I is the moment of inertia of the rod about its center of gravity.

The horizontal motion of center of gravity of pendulum rod is given by

$$m\frac{d^2}{dt^2}(x + l\sin\theta) = H \tag{3–49}$$

The vertical motion of center of gravity of pendulum rod is

$$m\frac{d^2}{dt^2}(l\cos\theta) = V - mg \tag{3–50}$$

The horizontal motion of cart is described by

$$M\frac{d^2x}{dt^2} = u - H \tag{3–51}$$

Since we must keep the inverted pendulum vertical, we can assume that $\theta(t)$ and $\dot{\theta}(t)$ are small quantities such that $\sin\theta \doteq 0, \cos\theta = 1$, and $\theta\dot{\theta}^2 = 0$. Then, Equations (3–48) through (3–50) can be linearized. The linearized equations are

$$I\ddot{\theta} = Vl\theta - Hl \tag{3–52}$$

$$m(\ddot{x} + l\ddot{\theta}) = H \tag{3–53}$$

$$0 = V - mg \tag{3–54}$$

From Equations (3–51) and (3–53), we obtain

$$(M + m)\ddot{x} + ml\ddot{\theta} = u \tag{3–55}$$

From Equations (3–52), (3–53), and (3–54), we have

$$\begin{aligned} I\ddot{\theta} &= mgl\theta - Hl \\ &= mgl\theta - l(m\ddot{x} + ml\ddot{\theta}) \end{aligned}$$

or

$$(I + ml^2)\ddot{\theta} + ml\ddot{x} = mgl\theta \tag{3–56}$$

Equations (3–55) and (3–56) describe the motion of the inverted-pendulum-on-the-cart system. They constitute a mathematical model of the system.

EXAMPLE 3–9 Consider the inverted pendulum system shown in Figure 3–21. Since in this system the mass is concentrated at the top of the rod, the center of gravity is the center of the pendulum ball. For this case, the moment of inertia of the pendulum about its center of gravity is small, and we assume $I = 0$ in Equation (3–56). Then the mathematical model for this system becomes as follows:

$$(M + m)\ddot{x} + ml\ddot{\theta} = u \tag{3–57}$$

$$ml^2\ddot{\theta} + ml\ddot{x} = mgl\theta \tag{3–58}$$

Equations (3–57) and (3–58) can be modified to

$$Ml\ddot{\theta} = (M + m)g\theta - u \tag{3–59}$$

$$M\ddot{x} = u - mg\theta \tag{3–60}$$

PETITIONER'S EXHIBIT 1002
US PATENT NO. 6,581,565
Page 9887

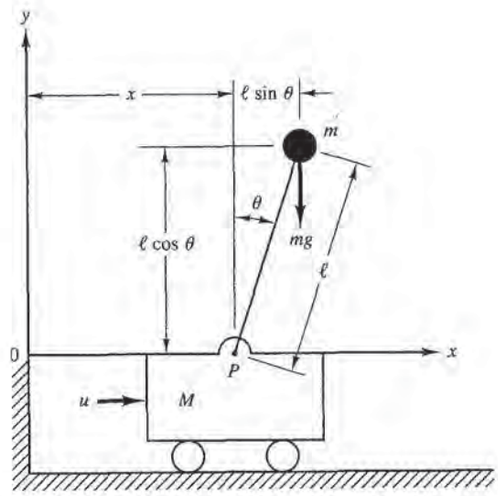

Figure 3–21
Inverted-pendulum system.

Equation (3–59) was obtained by eliminating $\ddot{x}$ from Equations (3–57) and (3–58). Equation (3–60) was obtained by eliminating $\ddot{\theta}$ from Equations (3–57) and (3–58). From Equation (3–59) we obtain the plant transfer function to be

$$\frac{\Theta(s)}{-U(s)} = \frac{1}{Mls^2 - (M+m)g}$$
$$= \frac{1}{Ml\left(s + \sqrt{\frac{M+m}{Ml}g}\right)\left(s - \sqrt{\frac{M+m}{Ml}g}\right)}$$

The inverted pendulum plant has one pole on the negative real axis $[s = -(\sqrt{M+m}/\sqrt{Ml})\sqrt{g}]$ and another on the positive real axis $[s = (\sqrt{M+m}/\sqrt{Ml})\sqrt{g}]$. Hence, the plant is open-loop unstable.

Define state variables x_1, x_2, x_3, and x_4 by

$$x_1 = \theta$$
$$x_2 = \dot{\theta}$$
$$x_3 = x$$
$$x_4 = \dot{x}$$

Note that angle θ indicates the rotation of the pendulum rod about point P, and x is the location of the cart. If we consider θ and x as the outputs of the system, then

$$\mathbf{y} = \begin{bmatrix} y_1 \\ y_2 \end{bmatrix} = \begin{bmatrix} \theta \\ x \end{bmatrix} = \begin{bmatrix} x_1 \\ x_3 \end{bmatrix}$$

(Notice that both θ and x are easily measurable quantities). Then, from the definition of the state variables and Equations (3–59) and (3–60), we obtain

$$\dot{x}_1 = x_2$$
$$\dot{x}_2 = \frac{M+m}{Ml}gx_1 - \frac{1}{Ml}u$$
$$\dot{x}_3 = x_4$$
$$\dot{x}_4 = -\frac{m}{M}gx_1 + \frac{1}{M}u$$

PETITIONER'S EXHIBIT 1002
US PATENT NO. 6,581,565
Page 9888

In terms of vector-matrix equations, we have

$$\begin{bmatrix} \dot{x}_1 \\ \dot{x}_2 \\ \dot{x}_3 \\ \dot{x}_4 \end{bmatrix} = \begin{bmatrix} 0 & 1 & 0 & 0 \\ \dfrac{M+m}{Ml}g & 0 & 0 & 0 \\ 0 & 0 & 0 & 1 \\ -\dfrac{m}{M}g & 0 & 0 & 0 \end{bmatrix} \begin{bmatrix} x_1 \\ x_2 \\ x_3 \\ x_4 \end{bmatrix} + \begin{bmatrix} 0 \\ -\dfrac{1}{Ml} \\ 0 \\ \dfrac{1}{M} \end{bmatrix} u \tag{3–61}$$

$$\begin{bmatrix} y_1 \\ y_2 \end{bmatrix} = \begin{bmatrix} 1 & 0 & 0 & 0 \\ 0 & 0 & 1 & 0 \end{bmatrix} \begin{bmatrix} x_1 \\ x_2 \\ x_3 \\ x_4 \end{bmatrix} \tag{3–62}$$

Equations (3–61) and (3–62) give a state-space representation of the inverted pendulum system. (Note that state-space representation of the system is not unique. There are infinitely many such representations for this system.

3–8 ELECTRICAL AND ELECTRONIC SYSTEMS

Basic laws governing electrical circuits are Kirchhoff's current law and voltage law. Kirchhoff's current law (node law) states that the algebraic sum of all currents entering and leaving a node is zero. (This law can also be stated as follows: The sum of currents entering a node is equal to the sum of currents leaving the same node.) Kirchhoff's voltage law (loop law) states that at any given instant the algebraic sum of the voltages around any loop in an electrical circuit is zero. (This law can also be stated as follows: The sum of the voltage drops is equal to the sum of the voltage rises around a loop.) A mathematical model of an electrical circuit can be obtained by applying one or both of Kirchhoff's laws to it.

This section first deals with simple electrical circuits and then treats mathematical modeling of operational amplifier systems.

LRC Circuit. Consider the electrical circuit shown in Figure 3–22. The circuit consists of an inductance L (henry), a resistance R (ohm), and a capacitance C (farad). Applying Kirchhoff's voltage law to the system, we obtain the following equations:

$$L\frac{di}{dt} + Ri + \frac{1}{C}\int i\,dt = e_i \tag{3–63}$$

$$\frac{1}{C}\int i\,dt = e_o \tag{3–64}$$

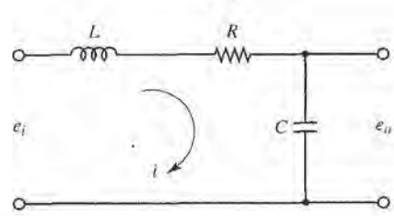

Figure 3–22
Electrical circuit.

PETITIONER'S EXHIBIT 1002
US PATENT NO. 6,581,565
Page 9889

Equations (3–63) and (3–64) give a mathematical model of the circuit.

A transfer function model of the circuit can also be obtained as follows: Taking the Laplace transforms of Equations (3–63) and (3–64), assuming zero initial conditions, we obtain

$$LsI(s) + RI(s) + \frac{1}{C}\frac{1}{s}I(s) = E_i(s)$$

$$\frac{1}{C}\frac{1}{s}I(s) = E_o(s)$$

If e_i is assumed to be the input and e_o the output, then the transfer function of this system is found to be

$$\frac{E_o(s)}{E_i(s)} = \frac{1}{LCs^2 + RCs + 1} \tag{3–65}$$

State-Space Representation. A state-space model of the system shown in Figure 3–22 may be obtained as follows: First, note that the differential equation for the system can be obtained from Equation (3–65) as

$$\ddot{e}_o + \frac{R}{L}\dot{e}_o + \frac{1}{LC}e_o = \frac{1}{LC}e_i$$

Then by defining state variables by

$$x_1 = e_o$$
$$x_2 = \dot{e}_o$$

and the input and output variables by

$$u = e_i$$
$$y = e_o = x_1$$

we obtain

$$\begin{bmatrix} \dot{x}_1 \\ \dot{x}_2 \end{bmatrix} = \begin{bmatrix} 0 & 1 \\ -\frac{1}{LC} & -\frac{R}{L} \end{bmatrix} \begin{bmatrix} x_1 \\ x_2 \end{bmatrix} + \begin{bmatrix} 0 \\ \frac{1}{LC} \end{bmatrix} u$$

and

$$y = \begin{bmatrix} 1 & 0 \end{bmatrix} \begin{bmatrix} x_1 \\ x_2 \end{bmatrix}$$

These two equations give a mathematical model of the system in state space.

Transfer Functions of Cascaded Elements. Many feedback systems have components that load each other. Consider the system shown in Figure 3–23. Assume that

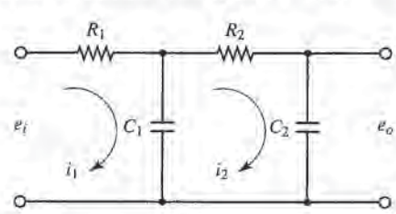

Figure 3–23
Electrical system.

PETITIONER'S EXHIBIT 1002
US PATENT NO. 6,581,565
Page 9890

e_i is the input and e_o is the output. The capacitances C_1 and C_2 are not charged initially. It will be shown that the second stage of the circuit (R_2C_2 portion) produces a loading effect on the first stage (R_1C_1 portion). The equations for this system are

$$\frac{1}{C_1}\int (i_1 - i_2)\,dt + R_1 i_1 = e_i \tag{3–66}$$

and

$$\frac{1}{C_1}\int (i_2 - i_1)\,dt + R_2 i_2 + \frac{1}{C_2}\int i_2\,dt = 0 \tag{3–67}$$

$$\frac{1}{C_2}\int i_2\,dt = e_o \tag{3–68}$$

Taking the Laplace transforms of Equations (3–66) through (3–68), respectively, using zero initial conditions, we obtain

$$\frac{1}{C_1 s}[I_1(s) - I_2(s)] + R_1 I_1(s) = E_i(s) \tag{3–69}$$

$$\frac{1}{C_1 s}[I_2(s) - I_1(s)] + R_2 I_2(s) + \frac{1}{C_2 s} I_2(s) = 0 \tag{3–70}$$

$$\frac{1}{C_2 s} I_2(s) = E_o(s) \tag{3–71}$$

Eliminating $I_1(s)$ from Equations (3–69) and (3–70) and writing $E_i(s)$ in terms of $I_2(s)$, we find the transfer function between $E_o(s)$ and $E_i(s)$ to be

$$\begin{aligned}\frac{E_o(s)}{E_i(s)} &= \frac{1}{(R_1C_1 s + 1)(R_2C_2 s + 1) + R_1C_2 s} \\ &= \frac{1}{R_1C_1R_2C_2 s^2 + (R_1C_1 + R_2C_2 + R_1C_2)s + 1}\end{aligned} \tag{3–72}$$

The term R_1C_2s in the denominator of the transfer function represents the interaction of two simple RC circuits. Since $(R_1C_1 + R_2C_2 + R_1C_2)^2 > 4R_1C_1R_2C_2$, the two roots of the denominator of Equation (3–72) are real.

The present analysis shows that, if two RC circuits are connected in cascade so that the output from the first circuit is the input to the second, the overall transfer function is not the product of $1/(R_1C_1s + 1)$ and $1/(R_2C_2s + 1)$. The reason for this is that, when we derive the transfer function for an isolated circuit, we implicitly assume that the output is unloaded. In other words, the load impedance is assumed to be infinite, which means that no power is being withdrawn at the output. When the second circuit is connected to the output of the first, however, a certain amount of power is withdrawn, and thus the assumption of no loading is violated. Therefore, if the transfer function of this system is obtained under the assumption of no loading, then it is not valid. The degree of the loading effect determines the amount of modification of the transfer function.

PETITIONER'S EXHIBIT 1002
US PATENT NO. 6,581,565
Page 9891

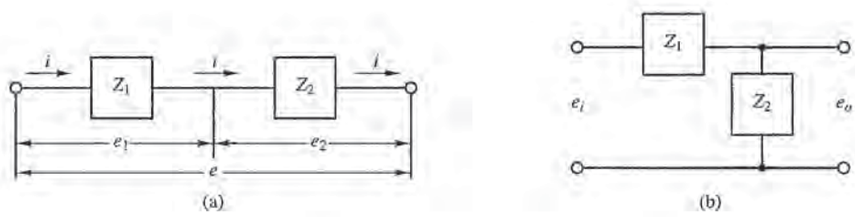

Figure 3–24
Electrical circuits.

Complex Impedances. In deriving transfer functions for electrical circuits, we frequently find it convenient to write the Laplace-transformed equations directly, without writing the differential equations. Consider the system shown in Figure 3–24(a). In this system, Z_1 and Z_2 represent complex impedances. The complex impedance $Z(s)$ of a two-terminal circuit is the ratio of $E(s)$, the Laplace transform of the voltage across the terminals, to $I(s)$, the Laplace transform of the current through the element, under the assumption that the initial conditions are zero, so that $Z(s) = E(s)/I(s)$. If the two-terminal elements is a resistance R, capacitance C, or inductance L, then the complex impedance is given by R, $1/Cs$, or Ls, respectively. If complex impedances are connected in series, the total impedance is the sum of the individual complex impedances.

Remember that the impedance approach is valid only if the initial conditions involved are all zeros. Since the transfer function requires zero initial conditions, the impedance approach can be applied to obtain the transfer function of the electrical circuit. This approach greatly simplifies the derivation of transfer functions of electrical circuits.

Consider the circuit shown in Figure 3–24(b). Assume that the voltages e_i and e_o are the input and output of the circuit, respectively. Then the transfer function of this circuit is

$$\frac{E_o(s)}{E_i(s)} = \frac{Z_2(s)}{Z_1(s) + Z_2(s)}$$

For the system shown in Figure 3–22,

$$Z_1 = Ls + R, \qquad Z_2 = \frac{1}{Cs}$$

Hence the transfer function $E_o(s)/E_i(s)$ can be found as follows:

$$\frac{E_o(s)}{E_i(s)} = \frac{\dfrac{1}{Cs}}{Ls + R + \dfrac{1}{Cs}} = \frac{1}{LCs^2 + RCs + 1}$$

which is, of course, identical to Equation (3–65).

PETITIONER'S EXHIBIT 1002
US PATENT NO. 6,581,565
Page 9892

EXAMPLE 3–10 Consider again the system shown in Figure 3–23. Obtain the transfer function $E_o(s)/E_i(s)$ by use of the complex impedance approach. (Capacitors C_1 and C_2 are not charged initially.)

The circuit shown in Figure 3–23 can be redrawn as that shown in Figure 3–25(a), which can be further modified to Figure 3–25(b).

In the system shown in Figure 3–25(b) the current I is divided into two currents I_1 and I_2. Noting that

$$Z_2 I_1 = (Z_3 + Z_4)I_2, \qquad I_1 + I_2 = I$$

we obtain

$$I_1 = \frac{Z_3 + Z_4}{Z_2 + Z_3 + Z_4} I, \qquad I_2 = \frac{Z_2}{Z_2 + Z_3 + Z_4} I$$

Noting that

$$E_i(s) = Z_1 I + Z_2 I_1 = \left[Z_1 + \frac{Z_2(Z_3 + Z_4)}{Z_2 + Z_3 + Z_4} \right] I$$

$$E_o(s) = Z_4 I_2 = \frac{Z_2 Z_4}{Z_2 + Z_3 + Z_4} I$$

we obtain

$$\frac{E_o(s)}{E_i(s)} = \frac{Z_2 Z_4}{Z_1(Z_2 + Z_3 + Z_4) + Z_2(Z_3 + Z_4)}$$

Substituting $Z_1 = R_1$, $Z_2 = 1/(C_1 s)$, $Z_3 = R_2$, and $Z_4 = 1/(C_2 s)$ into this last equation, we get

$$\frac{E_o(s)}{E_i(s)} = \frac{\dfrac{1}{C_1 s}\dfrac{1}{C_2 s}}{R_1\left(\dfrac{1}{C_1 s} + R_2 + \dfrac{1}{C_2 s}\right) + \dfrac{1}{C_1 s}\left(R_2 + \dfrac{1}{C_2 s}\right)}$$

$$= \frac{1}{R_1 C_1 R_2 C_2 s^2 + (R_1 C_1 + R_2 C_2 + R_1 C_2)s + 1}$$

which is the same as that given by Equation (3–72).

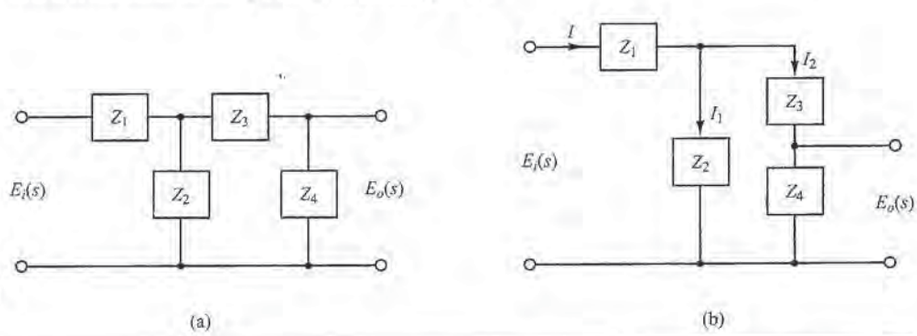

Figure 3–25
(a) The circuit of Figure 3–23 shown in terms of impedances; (b) equivalent circuit diagram.

PETITIONER'S EXHIBIT 1002
US PATENT NO. 6,581,565
Page 9893

Figure 3–26
(a) System consisting of two nonloading cascaded elements; (b) an equivalent system.

Transfer Functions of Nonloading Cascaded Elements. The transfer function of a system consisting of two nonloading cascaded elements can be obtained by eliminating the intermediate input and output. For example, consider the system shown in Figure 3–26(a). The transfer functions of the elements are

$$G_1(s) = \frac{X_2(s)}{X_1(s)} \qquad \text{and} \qquad G_2(s) = \frac{X_3(s)}{X_2(s)}$$

If the input impedance of the second element is infinite, the output of the first element is not affected by connecting it to the second element. Then the transfer function of the whole system becomes

$$G(s) = \frac{X_3(s)}{X_1(s)} = \frac{X_2(s)X_3(s)}{X_1(s)X_2(s)} = G_1(s)G_2(s)$$

The transfer function of the whole system is thus the product of the transfer functions of the individual elements. This is shown in Figure 3–26(b).

As an example, consider the system shown in Figure 3–27. The insertion of an isolating amplifier between the circuits to obtain nonloading characteristics is frequently used in combining circuits. Since amplifiers have very high input impedances, an isolation amplifier inserted between the two circuits justifies the nonloading assumption.

The two simple *RC* circuits, isolated by an amplifier as shown in Figure 3–27, have negligible loading effects, and the transfer function of the entire circuit equals the product of the individual transfer functions. Thus, in this case,

$$\begin{aligned}\frac{E_o(s)}{E_i(s)} &= \left(\frac{1}{R_1C_1s+1}\right)(K)\left(\frac{1}{R_2C_2s+1}\right)\\ &= \frac{K}{(R_1C_1s+1)(R_2C_2s+1)}\end{aligned}$$

Electronic Controllers. In what follows we shall discuss electronic controllers using operational amplifiers. We begin by deriving the transfer functions of simple operational-amplifier circuits. Then we derive the transfer functions of some of the operational-amplifier controllers. Finally, we give operational-amplifier controllers and their transfer functions in the form of a table.

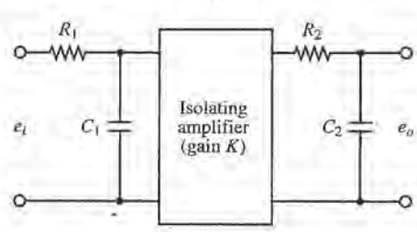

Figure 3–27
Electrical system.

PETITIONER'S EXHIBIT 1002
US PATENT NO. 6,581,565
Page 9894

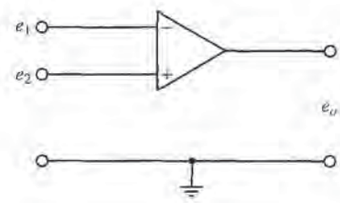

Figure 3–28
Operational amplifier.

Operational Amplifiers. Operational amplifiers, often called op amps, are frequently used to amplify signals in sensor circuits. Op amps are also frequently used in filters used for compensation purposes. Figure 3–28 shows an op amp. It is a common practice to choose the ground as 0 volt and measure the input voltages e_1 and e_2 relative to the ground. The input e_1 to the minus terminal of the amplifier is inverted, and the input e_2 to the plus terminal is not inverted. The total input to the amplifier thus becomes $e_2 - e_1$. Hence, for the circuit shown in Figure 3–28, we have

$$e_o = K(e_2 - e_1) = -K(e_1 - e_2)$$

where the inputs e_1 and e_2 may be dc or ac signals and K is the differential gain (voltage gain). The magnitude of K is approximately $10^5 \sim 10^6$ for dc signals and ac signals with frequencies less than approximately 10 Hz. (The differential gain K decreases with the signal frequency and becomes about unity for frequencies of 1 MHz $\sim$ 50 MHz.) Note that the op amp amplifies the difference in voltages e_1 and e_2. Such an amplifier is commonly called a differential amplifier. Since the gain of the op amp is very high, it is necessary to have a negative feedback from the output to the input to make the amplifier stable. (The feedback is made from the output to the inverted input so that the feedback is a negative feedback.)

In the ideal op amp, no current flows into the input terminals, and the output voltage is not affected by the load connected to the output terminal. In other words, the input impedance is infinity and the output impedance is zero. In an actual op amp, a very small (almost negligible) current flows into an input terminal and the output cannot be loaded too much. In our analysis here, we make the assumption that the op amps are ideal.

Inverting Amplifier. Consider the operational amplifier circuit shown in Figure 3–29. Let us obtain the output voltage e_o.

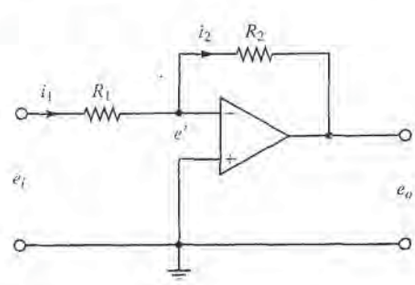

Figure 3–29
Inverting amplifier.

PETITIONER'S EXHIBIT 1002
US PATENT NO. 6,581,565
Page 9895

The equation for this circuit can be obtained as follows: Define

$$i_1 = \frac{e_i - e'}{R_1}, \qquad i_2 = \frac{e' - e_o}{R_2}$$

Since only a negligible current flows into the amplifier, the current i_1 must be equal to current i_2. Thus

$$\frac{e_i - e'}{R_1} = \frac{e' - e_o}{R_2}$$

Since $K(0 - e') = e_0$ and $K \gg 1$, e' must be almost zero, or $e' \doteq 0$. Hence we have

$$\frac{e_i}{R_1} = \frac{-e_o}{R_2}$$

or

$$e_o = -\frac{R_2}{R_1} e_i$$

Thus the circuit shown is an inverting amplifier. If $R_1 = R_2$, then the op-amp circuit shown acts as a sign inverter.

Noninverting Amplifier. Figure 3–30(a) shows a noninverting amplifier. A circuit equivalent to this one is shown in Figure 3–30(b). For the circuit of Figure 3–30(b), we have

$$e_o = K\left(e_i - \frac{R_1}{R_1 + R_2} e_o\right)$$

where K is the differential gain of the amplifier. From this last equation, we get

$$e_i = \left(\frac{R_1}{R_1 + R_2} + \frac{1}{K}\right) e_o$$

Since $K \gg 1$, if $R_1/(R_1 + R_2) \gg 1/K$, then

$$e_o = \left(1 + \frac{R_2}{R_1}\right) e_i$$

This equation gives the output voltage e_o. Since e_o and e_i have the same signs, the op-amp circuit shown in Figure 3–30(a) is noninverting.

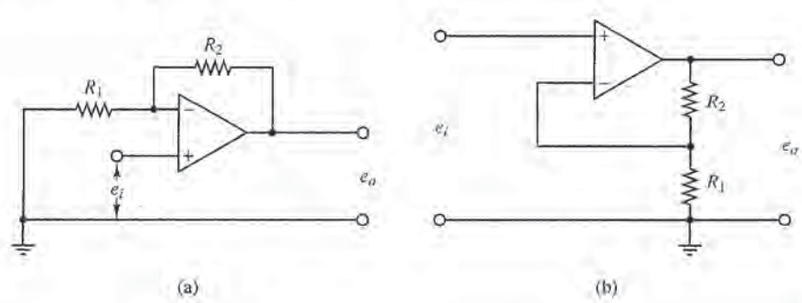

Figure 3–30
(a) Noninverting operational amplifier;
(b) equivalent circuit.

PETITIONER'S EXHIBIT 1002
US PATENT NO. 6,581,565
Page 9896

EXAMPLE 3–11 Figure 3-31 shows an electrical circuit involving an operational amplifier. Obtain the output e_o.

Let us define

$$i_1 = \frac{e_i - e'}{R_1}, \qquad i_2 = C\frac{d(e' - e_o)}{dt}, \qquad i_3 = \frac{e' - e_o}{R_2}$$

Noting that the current flowing into the amplifier is negligible, we have

$$i_1 = i_2 + i_3$$

Hence

$$\frac{e_i - e'}{R_1} = C\frac{d(e' - e_o)}{dt} + \frac{e' - e_o}{R_2}$$

Since $e' \doteq 0$, we have

$$\frac{e_i}{R_1} = -C\frac{de_o}{dt} - \frac{e_o}{R_2}$$

Taking the Laplace transform of this last equation, assuming the zero initial condition, we have

$$\frac{E_i(s)}{R_1} = -\frac{R_2Cs + 1}{R_2}E_o(s)$$

which can be written as

$$\frac{E_o(s)}{E_i(s)} = -\frac{R_2}{R_1}\frac{1}{R_2Cs + 1}$$

The op-amp circuit shown in Figure 3–31 is a first-order lag circuit. (Several other circuits involving op amps are shown in Table 3–1 together with their transfer functions.)

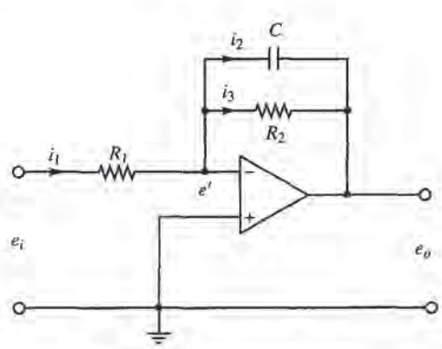

Figure 3–31
First-order lag circuit using operational amplifier.

PETITIONER'S EXHIBIT 1002
US PATENT NO. 6,581,565
Page 9897

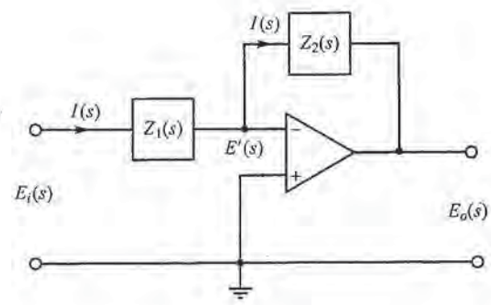

Figure 3–32
Operational amplifier circuit.

Impedance Approach to Obtaining Transfer Functions. Consider the op-amp circuit shown in Figure 3–32. Similar to the case of electrical circuits we discussed earlier, the impedance approach can be applied to op-amp circuits to obtain their transfer functions. For the circuit shown in Figure 3–32, we have

$$\frac{E_i(s) - E'(s)}{Z_1} = \frac{E'(s) - E_o(s)}{Z_2}$$

Since $E'(s) \doteq 0$, we have

$$\frac{E_o(s)}{E_i(s)} = -\frac{Z_2(s)}{Z_1(s)} \tag{3–73}$$

EXAMPLE 3–12 Referring to the op-amp circuit shown in Figure 3–31, obtain the transfer function $E_o(s)/E_i(s)$ by use of the impedance approach.

The complex impedances $Z_1(s)$ and $Z_2(s)$ for this circuit are

$$Z_1(s) = R_1 \qquad \text{and} \qquad Z_2(s) = \frac{1}{Cs + \dfrac{1}{R_2}} = \frac{R_2}{R_2Cs + 1}$$

The transfer function $E_o(s)/E_i(s)$ is, therefore, obtained as

$$\frac{E_o(s)}{E_i(s)} = -\frac{Z_2(s)}{Z_1(s)} = -\frac{R_2}{R_1}\frac{1}{R_2Cs + 1}$$

which is, of course, the same as that obtained in Example 3-11.

PETITIONER'S EXHIBIT 1002
US PATENT NO. 6,581,565
Page 9898

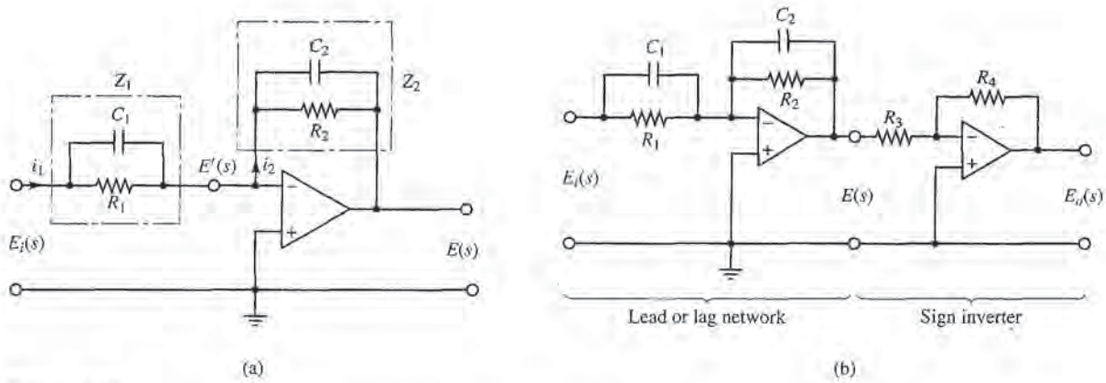

Figure 3–33
(a) Operational-amplifier circuit; (b) operational-amplifier circuit used as a lead or lag compensator.

Lead or Lag Networks Using Operational Amplifiers. Figure 3–33(a) shows an electronic circuit using an operational amplifier. The transfer function for this circuit can be obtained as follows: Define the input impedance and feedback impedance as Z_1 and Z_2, respectively. Then

$$Z_1 = \frac{R_1}{R_1C_1s + 1}, \qquad Z_2 = \frac{R_2}{R_2C_2s + 1}$$

Hence, referring to Equation (3–73), we have

$$\frac{E(s)}{E_i(s)} = -\frac{Z_2}{Z_1} = -\frac{R_2}{R_1}\frac{R_1C_1s + 1}{R_2C_2s + 1} = -\frac{C_1}{C_2}\frac{s + \dfrac{1}{R_1C_1}}{s + \dfrac{1}{R_2C_2}} \tag{3–74}$$

Notice that the transfer function in Equation (3–74) contains a minus sign. Thus, this circuit is sign inverting. If such a sign inversion is not convenient in the actual application, a sign inverter may be connected to either the input or the output of the circuit of Figure 3–33(a). An example is shown in Figure 3–33(b). The sign inverter has the transfer function of

$$\frac{E_o(s)}{E(s)} = -\frac{R_4}{R_3}$$

The sign inverter has the gain of $-R_4/R_3$. Hence the network shown in Figure 3–33(b) has the following transfer function:

$$\frac{E_o(s)}{E_i(s)} = \frac{R_2R_4}{R_1R_3}\frac{R_1C_1s + 1}{R_2C_2s + 1} = \frac{R_4C_1}{R_3C_2}\frac{s + \dfrac{1}{R_1C_1}}{s + \dfrac{1}{R_2C_2}}$$

$$= K_c\alpha\frac{Ts + 1}{\alpha Ts + 1} = K_c\frac{s + \dfrac{1}{T}}{s + \dfrac{1}{\alpha T}} \tag{3–75}$$

PETITIONER'S EXHIBIT 1002
US PATENT NO. 6,581,565
Page 9899

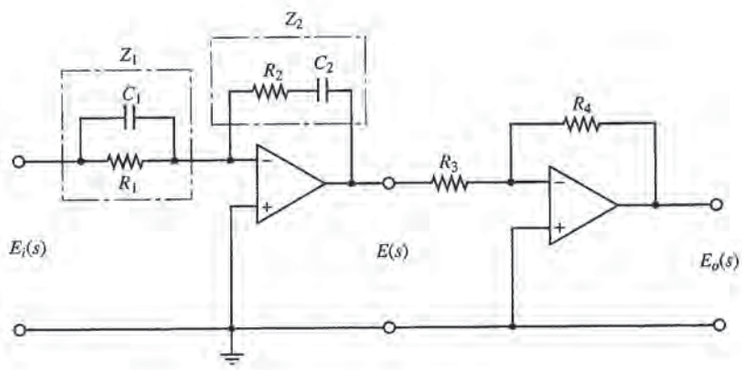

Figure 3–34
Electronic PID controller.

where

$$T = R_1C_1, \qquad \alpha T = R_2C_2, \qquad K_c = \frac{R_4C_1}{R_3C_2}$$

Notice that

$$K_c\alpha = \frac{R_4C_1}{R_3C_2}\frac{R_2C_2}{R_1C_1} = \frac{R_2R_4}{R_1R_3}, \qquad \alpha = \frac{R_2C_2}{R_1C_1}$$

This network has a dc gain of $K_c\alpha = R_2R_4/(R_1R_3)$.

Note that this network is a lead network if $R_1C_1 > R_2C_2$, or $\alpha < 1$. It is a lag network if $R_1C_1 < R_2C_2$.

PID Controller Using Operational Amplifiers. Figure 3–34 shows an electronic proportional-plus-integral-plus-derivative controller (a PID controller) using operational amplifiers. The transfer function $E(s)/E_i(s)$ is given by

$$\frac{E(s)}{E_i(s)} = -\frac{Z_2}{Z_1}$$

where

$$Z_1 = \frac{R_1}{R_1C_1s + 1}, \qquad Z_2 = \frac{R_2C_2s + 1}{C_2s}$$

Thus

$$\frac{E(s)}{E_i(s)} = -\left(\frac{R_2C_2s + 1}{C_2s}\right)\left(\frac{R_1C_1s + 1}{R_1}\right)$$

Noting that

$$\frac{E_o(s)}{E(s)} = -\frac{R_4}{R_3}$$

PETITIONER'S EXHIBIT 1002
US PATENT NO. 6,581,565
Page 9900

we have

$$\frac{E_o(s)}{E_i(s)} = \frac{E_o(s)}{E(s)}\frac{E(s)}{E_i(s)} = \frac{R_4R_2}{R_3R_1}\frac{(R_1C_1s + 1)(R_2C_2s + 1)}{R_2C_2s}$$

$$= \frac{R_4R_2}{R_3R_1}\left(\frac{R_1C_1 + R_2C_2}{R_2C_2} + \frac{1}{R_2C_2s} + R_1C_1s\right)$$

$$= \frac{R_4(R_1C_1 + R_2C_2)}{R_3R_1C_2}\left[1 + \frac{1}{(R_1C_1 + R_2C_2)s} + \frac{R_1C_1R_2C_2}{R_1C_1 + R_2C_2}s\right] \qquad (3\text{–}76)$$

Notice that the second operational-amplifier circuit acts as a sign inverter as well as a gain adjuster.

When a PID controller is expressed as

$$\frac{E_o(s)}{E_i(s)} = K_p\left(1 + \frac{T_i}{s} + T_ds\right)$$

K_p is called the proportional gain, T_i is called the integral time, and T_d is called the derivative time. From Equation (3–76) we obtain the proportional gain K_p, integral time T_i, and derivative time T_d to be

$$K_p = \frac{R_4(R_1C_1 + R_2C_2)}{R_3R_1C_2}$$

$$T_i = \frac{1}{R_1C_1 + R_2C_2}$$

$$T_d = \frac{R_1C_1R_2C_2}{R_1C_1 + R_2C_2}$$

When a PID controller is expressed as

$$\frac{E_o(s)}{E_i(s)} = K_p + \frac{K_i}{s} + K_ds$$

K_p is called the proportional gain, K_i is called the integral gain, and K_d is called the derivative gain. For this controller

$$K_p = \frac{R_4(R_1C_1 + R_2C_2)}{R_3R_1C_2}$$

$$K_i = \frac{R_4}{R_3R_1C_2}$$

$$K_d = \frac{R_4R_2C_1}{R_3}$$

Table 3-1 shows a list of operational-amplifier circuits that may be used as controllers or compensators.

PETITIONER'S EXHIBIT 1002
US PATENT NO. 6,581,565
Page 9901

Table 3–1 Operational-Amplifier Circuits That May Be Used as Compensators

	Control Action	$G(s) = \frac{E_o(s)}{E_i(s)}$	Operational Amplifier Circuits
1	P	$\frac{R_4}{R_3}\frac{R_2}{R_1}$	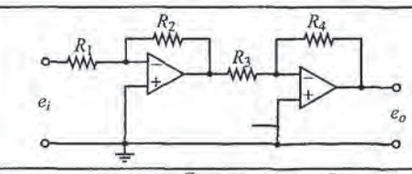
2	I	$\frac{R_4}{R_3}\frac{1}{R_1C_2s}$	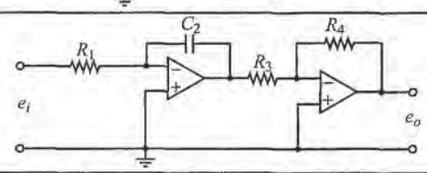
3	PD	$\frac{R_4}{R_3}\frac{R_2}{R_1}(R_1C_1s+1)$	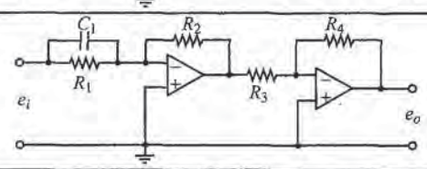
4	PI	$\frac{R_4}{R_3}\frac{R_2}{R_1}\frac{R_2C_2s+1}{R_2C_2s}$	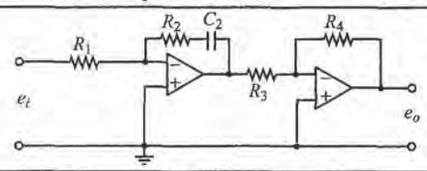
5	PID	$\frac{R_4}{R_3}\frac{R_2}{R_1}\frac{(R_1C_1s+1)(R_2C_2s+1)}{R_2C_2s}$	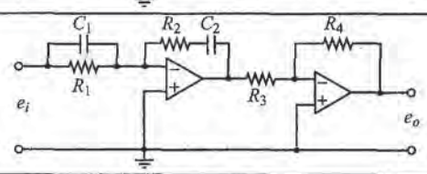
6	Lead or lag	$\frac{R_4}{R_3}\frac{R_2}{R_1}\frac{R_1C_1s+1}{R_2C_2s+1}$	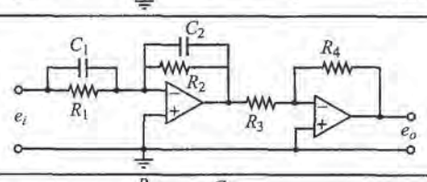
7	Lag–lead	$\frac{R_6}{R_5}\frac{R_4}{R_3}\frac{[(R_1+R_3)C_1s+1](R_2C_2s+1)}{(R_1C_1s+1)[(R_2+R_4)C_2s+1]}$	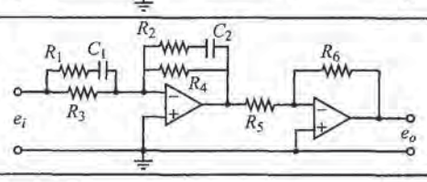

PETITIONER'S EXHIBIT 1002
US PATENT NO. 6,581,565
Page 9902

3–9 SIGNAL FLOW GRAPHS

The block diagram is useful for graphically representing control system dynamics and is used extensively in the analysis and design of control systems. An alternate approach for graphically representing control system dynamics is the signal flow graph approach, due to S. J. Mason. It is noted that the signal flow graph approach and the block diagram approach yield the same information and one is in no sense superior to the other.

Signal Flow Graphs. A signal flow graph is a diagram that represents a set of simultaneous linear algebraic equations. When applying the signal flow graph method to analyses of control systems, we must first transform linear differential equations into algebraic equations in s.

A signal flow graph consists of a network in which nodes are connected by directed branches. Each node represents a system variable, and each branch connected between two nodes acts as a signal multiplier. Note that the signal flows in only one direction. The direction of signal flow is indicated by an arrow placed on the branch, and the multiplication factor is indicated along the branch. The signal flow graph depicts the flow of signals from one point of a system to another and gives the relationships among the signals.

As mentioned earlier, a signal flow graph contains essentially the same information as a block diagram. If a signal flow graph is used to represent a control system, then a gain formula, called Mason's gain formula, may be used to obtain the relationships among system variables without carrying out reduction of the graph.

Definitions. Before we discuss signal flow graphs, we must define certain terms.

Node. A node is a point representing a variable or signal.

Transmittance. The transmittance is a real gain or complex gain between two nodes. Such gains can be expressed in terms of the transfer function between two nodes.

Branch. A branch is a directed line segment joining two nodes. The gain of a branch is a transmittance.

Input node or source. An input node or source is a node that has only outgoing branches. This corresponds to an independent variable.

Output node or sink. An output node or sink is a node that has only incoming branches. This corresponds to a dependent variable.

Mixed node. A mixed node is a node that has both incoming and outgoing branches.

Path. A path is a traversal of connected branches in the direction of the branch arrows. If no node is crossed more than once, the path is open. If the path ends at the same node from which it began and does not cross any other node more than once, it is closed. If a path crosses some node more than once but ends at a different node from which it began, it is neither open nor closed.

Loop. A loop is a closed path.

Loop gain. The loop gain is the product of the branch transmittances of a loop.

Nontouching loops. Loops are nontouching if they do not possess any common nodes.

Forward path. A forward path is a path from an input node (source) to an output node (sink) that does not cross any nodes more than once.

PETITIONER'S EXHIBIT 1002
US PATENT NO. 6,581,565
Page 9903

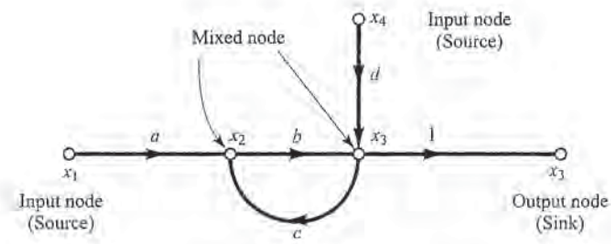

Figure 3–35
Signal flow graph.

Forward path gain. A forward path gain is the product of the branch transmittances of a forward path.

Figure 3–35 shows nodes and branches, together with transmittances.

Properties of Signal Flow Graphs. A few important properties of signal flow graphs are as follows:

1. A branch indicates the functional dependence of one signal on another. A signal passes through only in the direction specified by the arrow of the branch.
2. A node adds the signals of all incoming branches and transmits this sum to all outgoing branches.
3. A mixed node, which has both incoming and outgoing branches, may be treated as an output node (sink) by adding an outgoing branch of unity transmittance. (See Figure 3–35. Notice that a branch with unity transmittance is directed from x_3 to another node, also denoted by x_3.) Note, however, that we cannot change a mixed node to a source by this method.
4. For a given system, a signal flow graph is not unique. Many different signal flow graphs can be drawn for a given system by writing the system equations differently.

Signal Flow Graph Algebra. A signal flow graph of a linear system can be drawn using the foregoing definitions. In doing so, we usually bring the input nodes (sources) to the left and the output nodes (sinks) to the right. The independent and dependent variables of the equations become the input nodes (sources) and output nodes (sinks), respectively. The branch transmittances can be obtained from the coefficients of the equations.

To determine the input-output relationship, we may use Mason's formula, which will be given later, or we may reduce the signal flow graph to a graph containing only input and output nodes. To accomplish this, we use the following rules:

1. The value of a node with one incoming branch, as shown in Figure 3–36(a), is $x_2 = ax_1$.
2. The total transmittance of cascaded branches is equal to the product of all the branch transmittances. Cascaded branches can thus be combined into a single branch by multiplying the transmittances, as shown in Figure 3–36(b).
3. Parallel branches may be combined by adding the transmittances, as shown in Figure 3–36(c).
4. A mixed node may be eliminated, as shown in Figure 3–36(d).
5. A loop may be eliminated, as shown in Figure 3–36(e). Note that

$$x_3 = bx_2, \qquad x_2 = ax_1 + cx_3$$

PETITIONER'S EXHIBIT 1002
US PATENT NO. 6,581,565
Page 9904

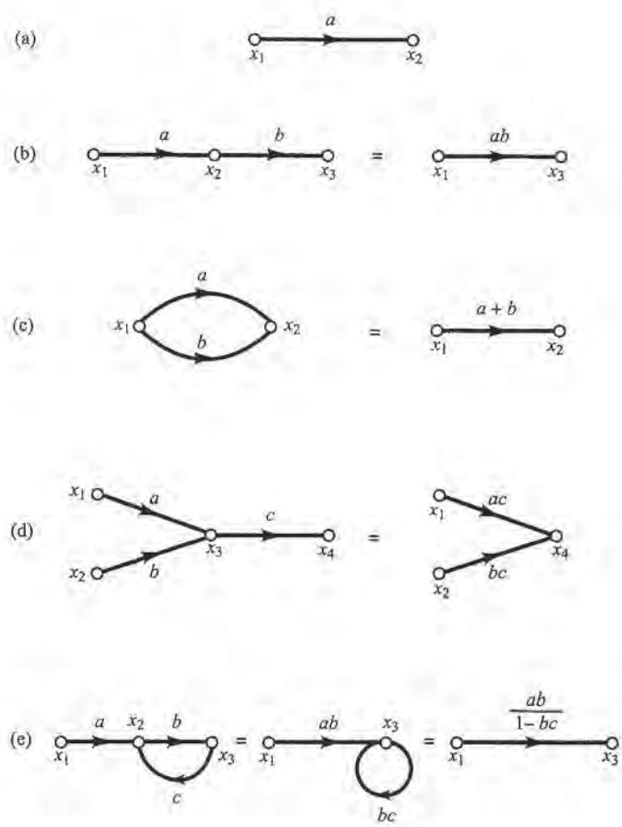

Figure 3–36
Signal flow graphs and simplifications.

Hence

$$x_3 = abx_1 + bcx_3 \tag{3–77}$$

or

$$x_3 = \frac{ab}{1 - bc} x_1 \tag{3–78}$$

Equation (3–77) corresponds to a diagram having a self-loop of transmittance bc. Elimination of the self-loop yields Equation (3–78), which clearly shows that the overall transmittance is $ab/(1 - bc)$.

Signal Flow Graph Representation of Linear Systems. Signal flow graphs are widely applied to linear-system analysis. Here the graph can be drawn from the system equations or, with practice, can be drawn by inspection of the physical system. Routine reduction by use of the foregoing rules gives the relation between an input and output variable.

PETITIONER'S EXHIBIT 1002
US PATENT NO. 6,581,565
Page 9905

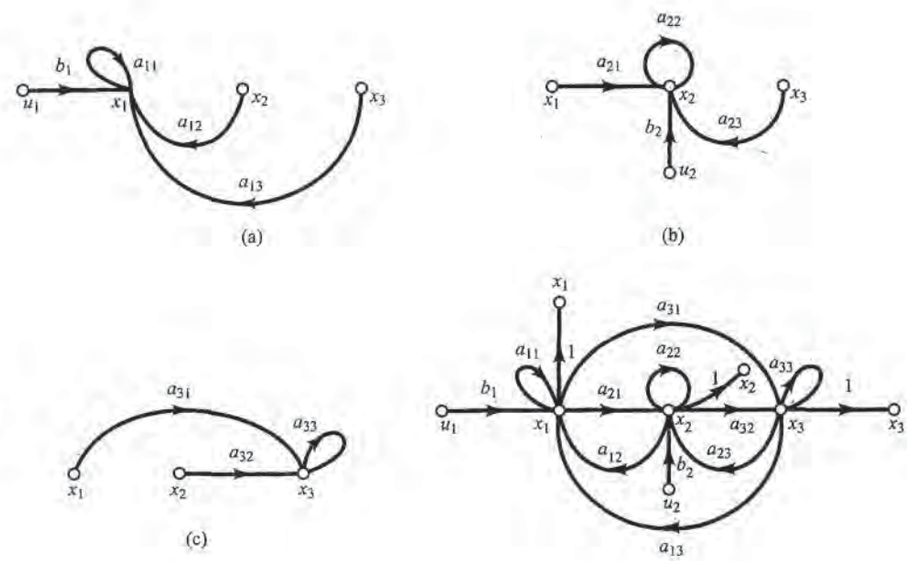

Figure 3–37
Signal flow graphs representing
(a) Equation (3–79),
(b) Equation (3–80), and
(c) Equation (3–81);
(d) complete signal flow graph for the system described by Equations (3–79)–(3–81).

Consider a system defined by the following set of equations:

$$x_1 = a_{11}x_1 + a_{12}x_2 + a_{13}x_3 + b_1u_1 \tag{3–79}$$

$$x_2 = a_{21}x_1 + a_{22}x_2 + a_{23}x_3 + b_2u_2 \tag{3–80}$$

$$x_3 = a_{31}x_1 + a_{32}x_2 + a_{33}x_3 \tag{3–81}$$

where u_1 and u_2 are input variables and x_1, x_2, and x_3 are output variables. A signal flow graph for this system, a graphical representation of these three simultaneous equations, indicating the interdependence of the variables, can be obtained as follows: First locate the nodes x_1, x_2, and x_3 as shown in Figure 3–37(a). Note that a_{ij} is the transmittance between x_j and x_i. Equation (3–79) states that x_1 is equal to the sum of the four signals $a_{11}x_1$, $a_{12}x_2$, $a_{13}x_3$, and b_1u_1. The signal flow graph representing Equation (3–79) is shown in Figure 3–37(a). Equation (3–80) states that x_2 is equal to the sum of $a_{21}x_1$, $a_{22}x_2$, $a_{23}x_3$, and b_2u_2. The corresponding signal flow graph is shown in Figure 3–37(b). The signal flow graph representing Equation (3–81) is shown in Figure 3–37(c).

The signal flow graph representing Equations (3–79), (3–80), and (3–81) is then obtained by combining Figures 3–37(a), (b), and (c). Finally, the complete signal flow graph for the given simultaneous equations is shown in Figure 3–37(d).

In dealing with a signal flow graph, the input nodes (sources) may be considered one at a time. The output signal is then equal to the sum of the individual contributions of each input.

The overall gain from an input to an output may be obtained directly from the signal flow graph by inspection, by use of Mason's formula, or by a reduction of the graph to a simpler form.

PETITIONER'S EXHIBIT 1002
US PATENT NO. 6,581,565
Page 9906

Signal Flow Graphs of Control Systems. Some signal flow graphs of simple control systems are shown in Figure 3–38. For such simple graphs, the closed-loop transfer function $C(s)/R(s)$ [or $C(s)/N(s)$] can be obtained easily by inspection. For more complicated signal flow graphs, Mason's gain formula is quite useful.

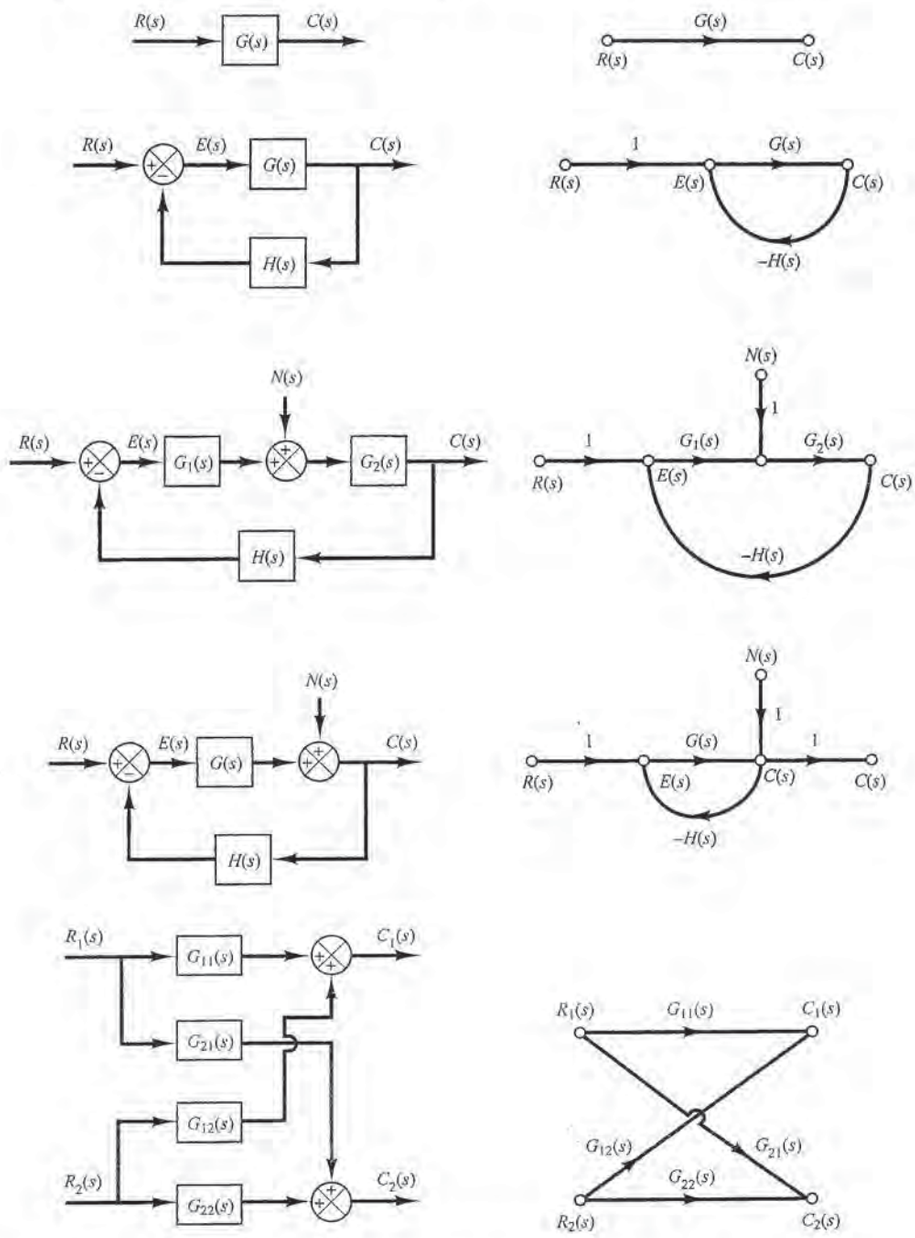

Figure 3–38
Block diagrams and corresponding signal flow graphs.

PETITIONER'S EXHIBIT 1002
US PATENT NO. 6,581,565
Page 9907

Mason's Gain Formula for Signal Flow Graphs. In many practical cases, we wish to determine the relationship between an input variable and an output variable of the signal flow graph. The transmittance between an input node and an output node is the overall gain, or overall transmittance, between these two nodes.

Mason's gain formula, which is applicable to the overall gain, is given by

$$P = \frac{1}{\Delta} \sum_k P_k \Delta_k$$

where

P_k = path gain or transmittance of kth forward path

Δ = determinant of graph

= 1 − (sum of all individual loop gains) + (sum of gain products of all possible combinations of two nontouching loops) − (sum of gain products of all possible combinations of three nontouching loops) + ⋯

$$= 1 - \sum_a L_a + \sum_{b,c} L_b L_c - \sum_{d,e,f} L_d L_e L_f + \cdots$$

$\sum_a L_a$ = sum of all individual loop gains

$\sum_{b,c} L_b L_c$ = sum of gain products of all possible combinations of two nontouching loops

$\sum_{d,e,f} L_d L_e L_f$ = sum of gain products of all possible combinations of three nontouching loops

Δ_k = cofactor of the kth forward path determinant of the graph with the loops touching the kth forward path removed, that is, the cofactor Δ_k is obtained from Δ by removing the loops that touch path P_k

(Note that the summations are taken over all possible paths from input to output.)

In the following, we shall illustrate the use of Mason's gain formula by means of two examples.

EXAMPLE 3–13 Consider the system shown in Figure 3–39. A signal flow graph for this system is shown in Figure 3–40. Let us obtain the closed-loop transfer function $C(s)/R(s)$ by use of Mason's gain formula.

In this system there is only one forward path between the input $R(s)$ and the output $C(s)$. The forward path gain is

$$P_1 = G_1 G_2 G_3$$

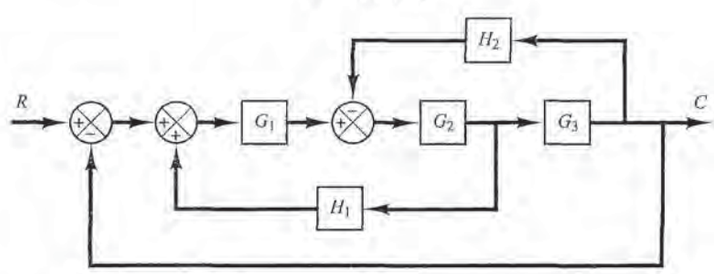

Figure 3–39 Multiple-loop system.

PETITIONER'S EXHIBIT 1002
US PATENT NO. 6,581,565
Page 9908

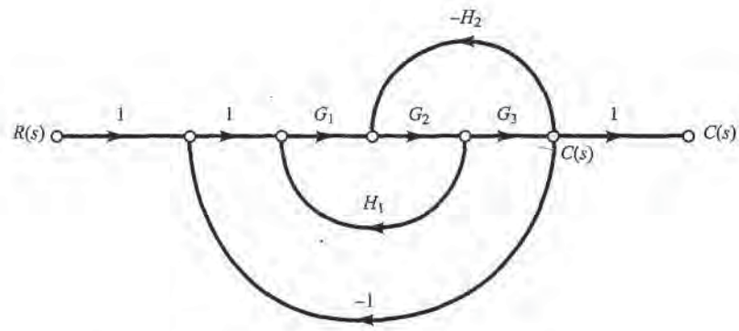

Figure 3–40
Signal flow graph for the system in Figure 3–39.

From Figure 3–40, we see that there are three individual loops. The gains of these loops are

$$L_1 = G_1G_2H_1$$
$$L_2 = -G_2G_3H_2$$
$$L_3 = -G_1G_2G_3$$

Note that since all three loops have a common branch, there are no nontouching loops. Hence, the determinant Δ is given by

$$\begin{aligned}\Delta &= 1 - (L_1 + L_2 + L_3)\\ &= 1 - G_1G_2H_1 + G_2G_3H_2 + G_1G_2G_3\end{aligned}$$

The cofactor Δ_1 of the determinant along the forward path connecting the input node and output node is obtained from Δ by removing the loops that touch this path. Since path P_1 touches all three loops, we obtain

$$\Delta_1 = 1$$

Therefore, the overall gain between the input $R(s)$ and the output $C(s)$, or the closed-loop transfer function, is given by

$$\begin{aligned}\frac{C(s)}{R(s)} = P &= \frac{P_1\Delta_1}{\Delta}\\ &= \frac{G_1G_2G_3}{1 - G_1G_2H_1 + G_2G_3H_2 + G_1G_2G_3}\end{aligned}$$

which is the same as the closed-loop transfer function obtained by block diagram reduction. Mason's gain formula thus gives the overall gain $C(s)/R(s)$ without a reduction of the graph.

EXAMPLE 3–14 Consider the system shown in Figure 3–41. Obtain the closed-loop transfer function $C(s)/R(s)$ by use of Mason's gain formula.

In this system, there are three forward paths between the input $R(s)$ and the output $C(s)$. The forward path gains are

$$P_1 = G_1G_2G_3G_4G_5$$
$$P_2 = G_1G_6G_4G_5$$
$$P_3 = G_1G_2G_7$$

PETITIONER'S EXHIBIT 1002
US PATENT NO. 6,581,565
Page 9909

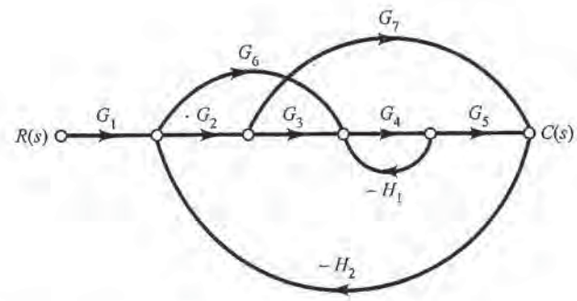

Figure 3–41
Signal flow graph for a system.

There are four individual loops, The gains of these loops are

$$L_1 = -G_4H_1$$
$$L_2 = -G_2G_7H_2$$
$$L_3 = -G_6G_4G_5H_2$$
$$L_4 = -G_2G_3G_4G_5H_2$$

Loop L_1 does not touch loop L_2. Hence, the determinant Δ is given by

$$\Delta = 1 - (L_1 + L_2 + L_3 + L_4) + L_1L_2 \tag{3–82}$$

The cofactor Δ_1, is obtained from Δ by removing the loops that touch path P_1. Therefore, by removing L_1, L_2, L_3, L_4, and L_1L_2 from Equation (3–82), we obtain

$$\Delta_1 = 1$$

Similarly, the cofactor Δ_2 is

$$\Delta_2 = 1$$

The cofactor Δ_3 is obtained by removing L_2, L_3, L_4, and L_1L_2 from Equation (3–82), giving

$$\Delta_3 = 1 - L_1$$

The closed-loop transfer function $C(s)/R(s)$ is then

$$\frac{C(s)}{R(s)} = P = \frac{1}{\Delta}(P_1\Delta_1 + P_2\Delta_2 + P_3\Delta_3)$$
$$= \frac{G_1G_2G_3G_4G_5 + G_1G_6G_4G_5 + G_1G_2G_7(1 + G_4H_1)}{1 + G_4H_1 + G_2G_7H_2 + G_6G_4G_5H_2 + G_2G_3G_4G_5H_2 + G_4H_1G_2G_7H_2}$$

Comments. The usual application of signal flow graphs is in system diagramming. The set of equations describing a linear system is represented by a signal flow graph by establishing nodes that represent the system variables and by interconnecting the nodes with weighted, directed, transmittances, which represent the relationships among the variables. Mason's gain formula may be used to establish the relationship between an input and an output. (Alternatively, the variables in the system may be eliminated one by one with reduction techniques.) Mason's gain formula is especially useful in reducing large and complex system diagrams in one step, without requiring step-by-step reductions.

PETITIONER'S EXHIBIT 1002
US PATENT NO. 6,581,565
Page 9910

Finally, it is noted that in applying the Mason's gain formula to a given system, one must be careful not to make mistakes in calculating the cofactors of the forward paths, Δ_k, since any errors, if they exist, may not easily be detected.

3-10 LINEARIZATION OF NONLINEAR MATHEMATICAL MODELS

Nonlinear Systems. A system is nonlinear if the principle of superposition does not apply. Thus, for a nonlinear system the response to two inputs cannot be calculated by treating one input at a time and adding the results.

Although many physical relationships are often represented by linear equations, in most cases actual relationships are not quite linear. In fact, a careful study of physical systems reveals that even so-called "linear systems" are really linear only in limited operating ranges. In practice, many electromechanical systems, hydraulic systems, pneumatic systems, and so on, involve nonlinear relationships among the variables. For example, the output of a component may saturate for large input signals. There may be a dead space that affects small signals. (The dead space of a component is a small range of input variations to which the component is insensitive.) Square-law nonlinearity may occur in some components. For instance, dampers used in physical systems may be linear for low-velocity operations but may become nonlinear at high velocities, and the damping force may become proportional to the square of the operating velocity.

Linearization of Nonlinear Systems. In control engineering a normal operation of the system may be around an equilibrium point, and the signals may be considered small signals around the equilibrium. (It should be pointed out that there are many exceptions to such a case.) However, if the system operates around an equilibrium point and if the signals involved are small signals, then it is possible to approximate the nonlinear system by a linear system. Such a linear system is equivalent to the nonlinear system considered within a limited operating range. Such a linearized model (linear, time-invariant model) is very important in control engineering.

The linearization procedure to be presented in the following is based on the expansion of nonlinear function into a Taylor series about the operating point and the retention of only the linear term. Because we neglect higher-order terms of Taylor series expansion, these neglected terms must be small enough; that is, the variables deviate only slightly from the operating condition.

Linear Approximation of Nonlinear Mathematical Models. To obtain a linear mathematical model for a nonlinear system, we assume that the variables deviate only slightly from some operating condition. Consider a system whose input is $x(t)$ and output is $y(t)$. The relationship between $y(t)$ and $x(t)$ is given by

$$y = f(x) \tag{3-83}$$

If the normal operating condition corresponds to $\bar{x}$, $\bar{y}$, then Equation (3-83) may be expanded into a Taylor series about this point as follows:

PETITIONER'S EXHIBIT 1002
US PATENT NO. 6,581,565
Page 9911

$$y = f(x)$$
$$= f(\bar{x}) + \frac{df}{dx}(x - \bar{x}) + \frac{1}{2!}\frac{d^2f}{dx^2}(x - \bar{x})^2 + \cdots \tag{3-84}$$

where the derivatives $df/dx, d^2f/dx^2, \ldots$ are evaluated at $x = \bar{x}$. If the variation $x - \bar{x}$ is small, we may neglect the higher-order terms in $x - \bar{x}$. Then Equation (3–84) may be written as

$$y = \bar{y} + K(x - \bar{x}) \tag{3-85}$$

where

$$\bar{y} = f(\bar{x})$$
$$K = \left.\frac{df}{dx}\right|_{x=\bar{x}}$$

Equation (3–85) may be rewritten as

$$y - \bar{y} = K(x - \bar{x}) \tag{3-86}$$

which indicates that $y - \bar{y}$ is proportional to $x - \bar{x}$. Equation (3–86) gives a linear mathematical model for the nonlinear system given by Equation (3–83) near the operating point $x - \bar{x}$, $y - \bar{y}$.

Next, consider a nonlinear system whose output y is a function of two inputs x_1 and x_2, so that

$$y = f(x_1, x_2) \tag{3-87}$$

To obtain a linear approximation to this nonlinear system, we may expand Equation (3–87) into a Taylor series about the normal operating point $\bar{x}_1, \bar{x}_2$. Then Equation (3–87) becomes

$$y = f(\bar{x}_1, \bar{x}_2) + \left[\frac{\partial f}{\partial x_1}(x_1 - \bar{x}_1) + \frac{\partial f}{\partial x_2}(x_2 - \bar{x}_2)\right]$$
$$+ \frac{1}{2!}\left[\frac{\partial^2 f}{\partial x_1^2}(x_1 - \bar{x}_1)^2 + 2\frac{\partial^2 f}{\partial x_1 \partial x_2}(x_1 - \bar{x}_1)(x_2 - \bar{x}_2)\right.$$
$$\left. + \frac{\partial^2 f}{\partial x_2^2}(x_2 - \bar{x}_2)^2\right] + \cdots$$

where the partial derivatives are evaluated at $x_1 = \bar{x}_1, x_2 = \bar{x}_2$. Near the normal operating point, the higher-order terms may be neglected. The linear mathematical model of this nonlinear system in the neighborhood of the normal operating condition is then given by

$$y - \bar{y} = K_1(x_1 - \bar{x}_1) + K_2(x_2 - \bar{x}_2)$$

PETITIONER'S EXHIBIT 1002
US PATENT NO. 6,581,565
Page 9912

where

$$\bar{y} = f(\bar{x}_1, \bar{x}_2)$$

$$K_1 = \left.\frac{\partial f}{\partial x_1}\right|_{x_1=\bar{x}_1,\, x_2=\bar{x}_2}$$

$$K_2 = \left.\frac{\partial f}{\partial x_2}\right|_{x_1=\bar{x}_1,\, x_2=\bar{x}_2}$$

The linearization technique presented here is valid in the vicinity of the operating condition. If the operating conditions vary widely, however, such linearized equations are not adequate, and nonlinear equations must be dealt with. It is important to remember that a particular mathematical model used in analysis and design may accurately represent the dynamics of an actual system for certain operating conditions, but may not be accurate for other operating conditions.

EXAMPLE 3–15 Linearize the nonlinear equation

$$z = xy$$

in the region $5 \le x \le 7$, $10 \le y \le 12$. Find the error if the linearized equation is used to calculate the value of z when $x = 5$, $y = 10$.

Since the region considered is given by $5 \le x \le 7$, $10 \le y \le 12$, choose $\bar{x} = 6$, $\bar{y} = 11$. Then $\bar{z} = \bar{x}\bar{y} = 66$. Let us obtain a linearized equation for the nonlinear equation near a point $\bar{x} = 6$, $\bar{y} = 11$.

Expanding the nonlinear equation into a Taylor series about point $x = \bar{x}$, $y = \bar{y}$ and neglecting the higher-order terms, we have

$$z - \bar{z} = a(x - \bar{x}) + b(y - \bar{y})$$

where

$$a = \left.\frac{\partial(xy)}{\partial x}\right|_{x=\bar{x},\, y=\bar{y}} = \bar{y} = 11$$

$$b = \left.\frac{\partial(xy)}{\partial y}\right|_{x=\bar{x},\, y=\bar{y}} = \bar{x} = 6$$

Hence the linearized equation is

$$z - 66 = 11(x - 6) + 6(y - 11)$$

or

$$z = 11x + 6y - 66$$

When $x = 5$, $y = 10$, the value of z given by the linearized equation is

$$z = 11x + 6y - 66 = 55 + 60 - 66 = 49$$

The exact value of z is $z = xy = 50$. The error is thus $50 - 49 = 1$. In terms of percentage, the error is 2%.

PETITIONER'S EXHIBIT 1002
US PATENT NO. 6,581,565
Page 9913

EXAMPLE PROBLEMS AND SOLUTIONS

A–3–1. Simplify the block diagram shown in Figure 3–42.

Solution. First, move the branch point of the path involving H_1 outside the loop involving H_2, as shown in Figure 3–43(a). Then eliminating two loops results in Figure 3–43(b). Combining two blocks into one gives Figure 3–43(c).

A–3–2. Simplify the block diagram shown in Figure 3–44. Obtain the transfer function relating $C(s)$ and $R(s)$.

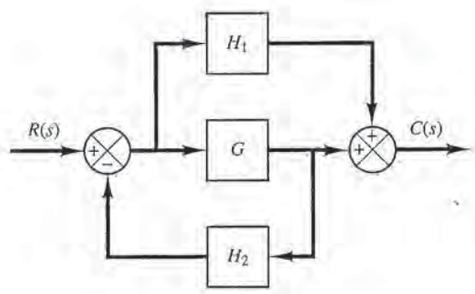

Figure 3–42
Block diagram of a sysrem.

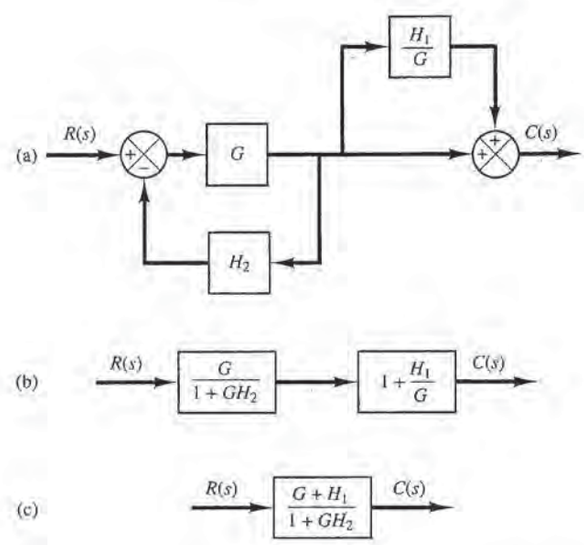

Figure 3–43
Simplified block diagrams for the system shown in Figure 3–42.

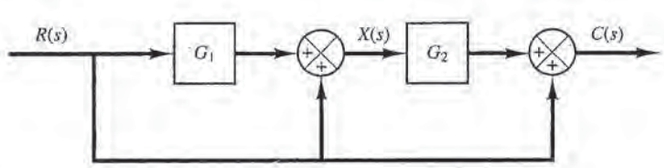

Figure 3–44
Block diagram of a system.

PETITIONER'S EXHIBIT 1002
US PATENT NO. 6,581,565
Page 9914

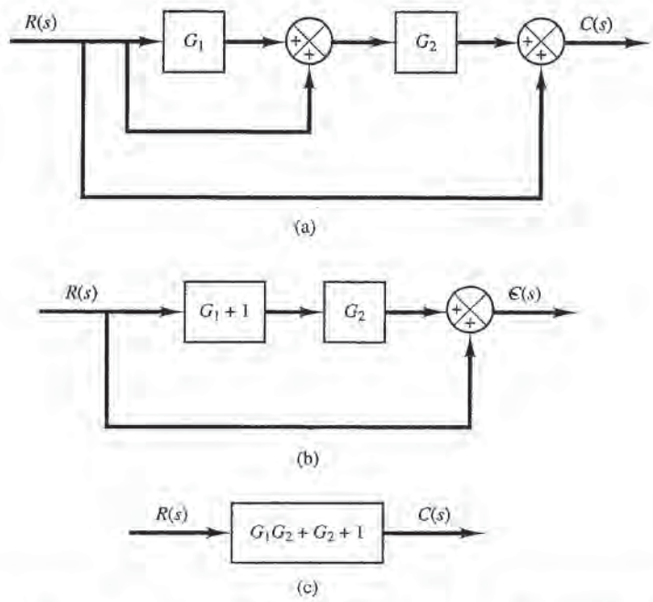

Figure 3–45
Reduction of the block diagram shown in Figure 3–44.

Solution. The block diagram of Figure 3–44 can be modified to that shown in Figure 3–45(a). Eliminating the minor feedforward path, we obtain Figure 3–45(b), which can be simplified to that shown in Figure 3–45(c). The transfer function $C(s)/R(s)$ is thus given by

$$\frac{C(s)}{R(s)} = G_1G_2 + G_2 + 1$$

The same result can also be obtained by proceeding as follows: Since signal $X(s)$ is the sum of two signals $G_1R(s)$ and $R(s)$, we have

$$X(s) = G_1R(s) + R(s)$$

The output signal $C(s)$ is the sum of $G_2X(s)$ and $R(s)$. Hence

$$C(s) = G_2X(s) + R(s) = G_2[G_1R(s) + R(s)] + R(s)$$

And so we have the same result as before:

$$\frac{C(s)}{R(s)} = G_1G_2 + G_2 + 1$$

A–3–3. Simplify the block diagram shown in Figure 3–46. Then, obtain the closed-loop transfer function $C(s)/R(s)$.

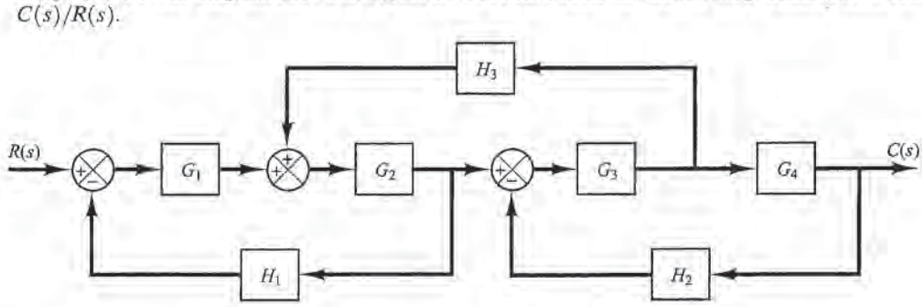

Figure 3–46
Block diagram of a system.

PETITIONER'S EXHIBIT 1002
US PATENT NO. 6,581,565
Page 9915

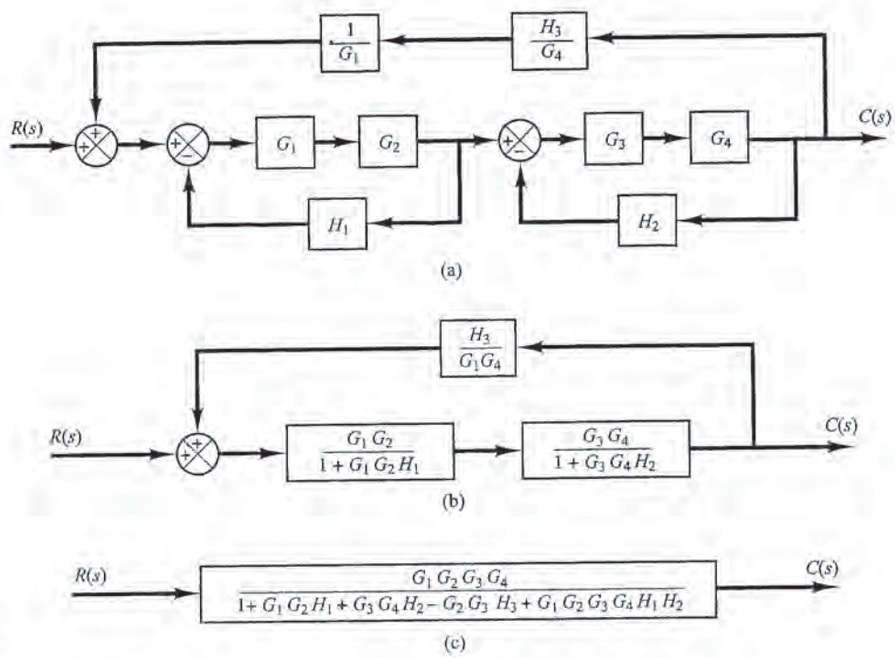

Figure 3–47
Successive reductions of the block diagram shown in Figure 3–46.

Solution. First move the branch point between G_3 and G_4 to the right-hand side of the loop containing G_3, G_4, and H_2. Then move the summing point between G_1 and G_2 to the left-hand side of the first summing point. See Figure 3–47(a). By simplifying each loop, the block diagram can be modified as shown in Figure 3–47(b). Further simplification results in Figure 3–47(c), from which the closed-loop transfer function $C(s)/R(s)$ is obtained as

$$\frac{C(s)}{R(s)} = \frac{G_1G_2G_3G_4}{1 + G_1G_2H_1 + G_3G_4H_2 - G_2G_3H_3 + G_1G_2G_3G_4H_1H_2}$$

A–3–4. Obtain transfer functions $C(s)/R(s)$ and $C(s)/D(s)$ of the system shown in Figure 3–48.

Solution. From Figure 3–48 we have

$$U(s) = G_fR(s) + G_cE(s) \tag{3–88}$$

$$C(s) = G_p[D(s) + G_1U(s)] \tag{3–89}$$

$$E(s) = R(s) - HC(s) \tag{3–90}$$

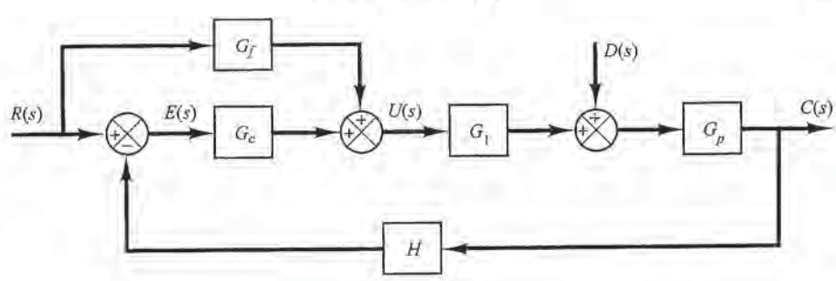

Figure 3–48
Control system with reference input and disturbance input.

PETITIONER'S EXHIBIT 1002
US PATENT NO. 6,581,565
Page 9916

By substituting Equation (3–88) into Equation (3–89), we get

$$C(s) = G_pD(s) + G_1G_p[G_fR(s) + G_cE(s)] \tag{3–91}$$

By substituting Equation (3–90) into Equation (3–91), we obtain

$$C(s) = G_pD(s) + G_1G_p\{G_fR(s) + G_c[R(s) - HC(s)]\}$$

Solving this last equation for $C(s)$, we get

$$C(s) + G_1G_pG_cHC(s) = G_pD(s) + G_1G_p(G_f + G_c)R(s)$$

Hence

$$C(s) = \frac{G_pD(s) + G_1G_p(G_f + G_c)R(s)}{1 + G_1G_pG_cH} \tag{3–92}$$

Note that Equation (3–92) gives the response $C(s)$ when both reference input $R(s)$ and disturbance input $D(s)$ are present.

To find transfer function $C(s)/R(s)$, we let $D(s) = 0$ in Equation (3–92). Then we obtain

$$\frac{C(s)}{R(s)} = \frac{G_1G_p(G_f + G_c)}{1 + G_1G_pG_cH}$$

Similarly, to obtain transfer function $C(s)/D(s)$, we let $R(s) = 0$ in Equation (3–92). Then $C(s)/D(s)$ can be given by

$$\frac{C(s)}{D(s)} = \frac{G_p}{1 + G_1G_pG_cH}$$

A–3–5. Figure 3–49 shows a system with two inputs and two outputs. Derive $C_1(s)/R_1(s)$, $C_1(s)/R_2(s)$, $C_2(s)/R_1(s)$, and $C_2(s)/R_2(s)$. (In deriving outputs for $R_1(s)$, assume that $R_2(s)$ is zero, and vice versa.)

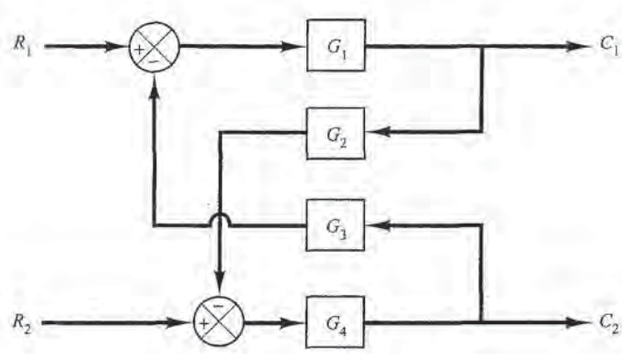

Figure 3–49
System with two inputs and two outputs.

PETITIONER'S EXHIBIT 1002
US PATENT NO. 6,581,565
Page 9917

Solution. From the figure, we obtain

$$C_1 = G_1(R_1 - G_3C_2) \tag{3–93}$$

$$C_2 = G_4(R_2 - G_2C_1) \tag{3–94}$$

By substituting Equation (3–94) into Equation (3–93), we obtain

$$C_1 = G_1[R_1 - G_3G_4(R_2 - G_2C_1)] \tag{3–95}$$

By substituting Equation (3–93) into Equation (3–94), we get

$$C_2 = G_4[R_2 - G_2G_1(R_1 - G_3C_2)] \tag{3–96}$$

Solving Equation (3–95) for C_1, we obtain

$$C_1 = \frac{G_1R_1 - G_1G_3G_4R_2}{1 - G_1G_2G_3G_4} \tag{3–97}$$

Solving Equation (3–96) for C_2 gives

$$C_2 = \frac{-G_1G_2G_4R_1 + G_4R_2}{1 - G_1G_2G_3G_4} \tag{3–98}$$

Equations (3–97) and (3–98) can be combined in the form of the transfer matrix as follows:

$$\begin{bmatrix} C_1 \\ C_2 \end{bmatrix} = \begin{bmatrix} \dfrac{G_1}{1 - G_1G_2G_3G_4} & -\dfrac{G_1G_3G_4}{1 - G_1G_2G_3G_4} \\ -\dfrac{G_1G_2G_4}{1 - G_1G_2G_3G_4} & \dfrac{G_4}{1 - G_1G_2G_3G_4} \end{bmatrix} \begin{bmatrix} R_1 \\ R_2 \end{bmatrix}$$

Then the transfer functions $C_1(s)/R_1(s)$, $C_1(s)/R_2(s)$, $C_2(s)/R_1(s)$ and $C_2(s)/R_2(s)$ can be obtained as follows:

$$\frac{C_1(s)}{R_1(s)} = \frac{G_1}{1 - G_1G_2G_3G_4}, \qquad \frac{C_1(s)}{R_2(s)} = -\frac{G_1G_3G_4}{1 - G_1G_2G_3G_4}$$

$$\frac{C_2(s)}{R_1(s)} = -\frac{G_1G_2G_4}{1 - G_1G_2G_3G_4}, \qquad \frac{C_2(s)}{R_2(s)} = \frac{G_4}{1 - G_1G_2G_3G_4}$$

Note that Equations (3–97) and (3–98) give responses C_1 and C_2, respectively, when both inputs R_1 and R_2 are present.

Notice that when $R_2(s) = 0$, the original block diagram can be simplified to those shown in Figures 3–50(a) and (b). Similarly, when $R_1(s) = 0$, the original block diagram can be simplified to those shown in Figures 3–50(c) and (d). From these simplified block diagrams we can also obtain $C_1(s)/R_1(s)$, $C_2(s)/R_1(s)$, $C_1(s)/R_2(s)$, and $C_2(s)/R_2(s)$, as shown to the right of each corresponding block diagram.

PETITIONER'S EXHIBIT 1002
US PATENT NO. 6,581,565
Page 9918

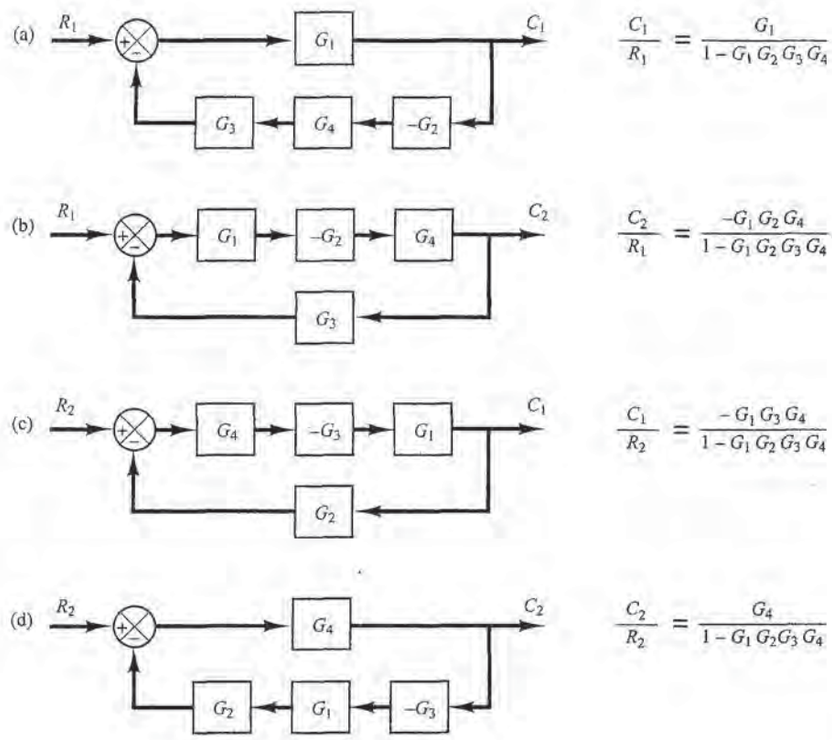

Figure 3–50
Simplified block diagrams and corresponding closed-loop transfer functions.

A–3–6. Show that for the differential equation system

$$\dddot{y} + a_1\ddot{y} + a_2\dot{y} + a_3 y = b_0\dddot{u} + b_1\ddot{u} + b_2\dot{u} + b_3 u \tag{3–99}$$

state and output equations can be given, respectively, by

$$\begin{bmatrix} \dot{x}_1 \\ \dot{x}_2 \\ \dot{x}_3 \end{bmatrix} = \begin{bmatrix} 0 & 1 & 0 \\ 0 & 0 & 1 \\ -a_3 & -a_2 & -a_1 \end{bmatrix} \begin{bmatrix} x_1 \\ x_2 \\ x_3 \end{bmatrix} + \begin{bmatrix} \beta_1 \\ \beta_2 \\ \beta_3 \end{bmatrix} u \tag{3–100}$$

and

$$y = [1 \quad 0 \quad 0] \begin{bmatrix} x_1 \\ x_2 \\ x_3 \end{bmatrix} + \beta_0 u \tag{3–101}$$

where state variables are defined by

$$x_1 = y - \beta_0 u$$
$$x_2 = \dot{y} - \beta_0\dot{u} - \beta_1 u = \dot{x}_1 - \beta_1 u$$
$$x_3 = \ddot{y} - \beta_0\ddot{u} - \beta_1\dot{u} - \beta_2 u = \dot{x}_2 - \beta_2 u$$

PETITIONER'S EXHIBIT 1002
US PATENT NO. 6,581,565
Page 9919

and

$$\beta_0 = b_0$$
$$\beta_1 = b_1 - a_1\beta_0$$
$$\beta_2 = b_2 - a_1\beta_1 - a_2\beta_0$$
$$\beta_3 = b_3 - a_1\beta_2 - a_2\beta_1 - a_3\beta_0$$

Solution. From the definition of state variables x_2 and x_3, we have

$$\dot{x}_1 = x_2 + \beta_1 u \tag{3–102}$$
$$\dot{x}_2 = x_3 + \beta_2 u \tag{3–103}$$

To derive the equation for $\dot{x}_3$, we first note from Equation (3–99) that

$$\dddot{y} = -a_1\ddot{y} - a_2\dot{y} - a_3 y + b_0\dddot{u} + b_1\ddot{u} + b_2\dot{u} + b_3 u$$

Since

$$x_3 = \ddot{y} - \beta_0\ddot{u} - \beta_1\dot{u} - \beta_2 u$$

we have

$$\begin{aligned}
\dot{x}_3 &= \dddot{y} - \beta_0\dddot{u} - \beta_1\ddot{u} - \beta_2\dot{u} \\
&= \left(-a_1\ddot{y} - a_2\dot{y} - a_3 y\right) + b_0\dddot{u} + b_1\ddot{u} + b_2\dot{u} + b_3 u - \beta_0\dddot{u} - \beta_1\ddot{u} - \beta_2\dot{u} \\
&= -a_1\left(\ddot{y} - \beta_0\ddot{u} - \beta_1\dot{u} - \beta_2 u\right) - a_1\beta_0\ddot{u} - a_1\beta_1\dot{u} - a_1\beta_2 u \\
&\quad -a_2\left(\dot{y} - \beta_0\dot{u} - \beta_1 u\right) - a_2\beta_0\dot{u} - a_2\beta_1 u - a_3\left(y - \beta_0 u\right) - a_3\beta_0 u \\
&\quad + b_0\dddot{u} + b_1\ddot{u} + b_2\dot{u} + b_3 u - \beta_0\dddot{u} - \beta_1\ddot{u} - \beta_2\dot{u} \\
&= -a_1 x_3 - a_2 x_2 - a_3 x_1 + \left(b_0 - \beta_0\right)\dddot{u} + \left(b_1 - \beta_1 - a_1\beta_0\right)\ddot{u} \\
&\quad + \left(b_2 - \beta_2 - a_1\beta_1 - a_2\beta_0\right)\dot{u} + \left(b_3 - a_1\beta_2 - a_2\beta_1 - a_3\beta_0\right)u \\
&= -a_1 x_3 - a_2 x_2 - a_3 x_1 + \left(b_3 - a_1\beta_2 - a_2\beta_1 - a_3\beta_0\right)u \\
&= -a_1 x_3 - a_2 x_2 - a_3 x_1 + \beta_3 u
\end{aligned}$$

Hence, we get

$$\dot{x}_3 = -a_3 x_1 - a_2 x_2 - a_1 x_3 + \beta_3 u \tag{3–104}$$

Combining Equations (3–102), (3–103), and (3–104) into a vector-matrix equation, we obtain Equation (3–100). Also, from the definition of state variable x_1, we get the output equation given by Equation (3–101).

A–3–7. Obtain a state-space equation and output equation for the system defined by

$$\frac{Y(s)}{U(s)} = \frac{2s^3 + s^2 + s + 2}{s^3 + 4s^2 + 5s + 2}$$

Solution. From the given transfer function, the differential equation for the system is

$$\dddot{y} + 4\ddot{y} + 5\dot{y} + 2y = 2\dddot{u} + \ddot{u} + \dot{u} + 2u$$

Comparing this equation with the standard equation given by Equation (3–33), rewritten

$$\dddot{y} + a_1\ddot{y} + a_2\dot{y} + a_3 y = b_0\dddot{u} + b_1\ddot{u} + b_2\dot{u} + b_3 u$$

PETITIONER'S EXHIBIT 1002
US PATENT NO. 6,581,565
Page 9920

we find

$$a_1 = 4, \qquad a_2 = 5, \qquad a_3 = 2$$
$$b_0 = 2, \qquad b_1 = 1, \qquad b_2 = 1, \qquad b_3 = 2$$

Referring to Equation (3–35), we have

$$\beta_0 = b_0 = 2$$
$$\beta_1 = b_1 - a_1\beta_0 = 1 - 4 \times 2 = -7$$
$$\beta_2 = b_2 - a_1\beta_1 - a_2\beta_0 = 1 - 4 \times (-7) - 5 \times 2 = 19$$
$$\beta_3 = b_3 - a_1\beta_2 - a_2\beta_1 - a_3\beta_0$$
$$= 2 - 4 \times 19 - 5 \times (-7) - 2 \times 2 = -43$$

Referring to Equation (3–34), we define

$$x_1 = y - \beta_0 u = y - 2u$$
$$x_2 = \dot{x}_1 - \beta_1 u = \dot{x}_1 + 7u$$
$$x_3 = \dot{x}_2 - \beta_2 u = \dot{x}_2 - 19u$$

Then referring to Equation (3–36),

$$\dot{x}_1 = x_2 - 7u$$
$$\dot{x}_2 = x_3 + 19u$$
$$\dot{x}_3 = -a_3x_1 - a_2x_2 - a_1x_3 + \beta_3 u$$
$$= -2x_1 - 5x_2 - 4x_3 - 43u$$

Hence, the state-space representation of the system is

$$\begin{bmatrix} \dot{x}_1 \\ \dot{x}_2 \\ \dot{x}_3 \end{bmatrix} = \begin{bmatrix} 0 & 1 & 0 \\ 0 & 0 & 1 \\ -2 & -5 & -4 \end{bmatrix} \begin{bmatrix} x_1 \\ x_2 \\ x_3 \end{bmatrix} + \begin{bmatrix} -7 \\ 19 \\ -43 \end{bmatrix} u$$
$$y = \begin{bmatrix} 1 & 0 & 0 \end{bmatrix} \begin{bmatrix} x_1 \\ x_2 \\ x_3 \end{bmatrix} + 2u$$

This is one possible state-space representation of the system. There are many (infinitely many) others. If we use MATLAB, it produces the following state-space representation:

$$\begin{bmatrix} \dot{x}_1 \\ \dot{x}_2 \\ \dot{x}_3 \end{bmatrix} = \begin{bmatrix} -4 & -5 & -2 \\ 1 & 0 & 0 \\ 0 & 1 & 0 \end{bmatrix} \begin{bmatrix} x_1 \\ x_2 \\ x_3 \end{bmatrix} + \begin{bmatrix} 1 \\ 0 \\ 0 \end{bmatrix} u$$
$$y = \begin{bmatrix} -7 & -9 & -2 \end{bmatrix} \begin{bmatrix} x_1 \\ x_2 \\ x_3 \end{bmatrix} + 2u$$

See MATLAB Program 3-4. (Note that all state-space representations for the same system are equivalent.)

PETITIONER'S EXHIBIT 1002
US PATENT NO. 6,581,565
Page 9921

MATLAB Program 3–4

```
num = [2 1 1 2];
den = [1 4 5 2];
[A,B,C,D] = tf2ss(num, den)

A =

    -4   -5   -2
     1    0    0
     0    1    0

B =

     1
     0
     0

C =

    -7   -9   -2

D =

     2
```

A–3–8. Obtain a state-space model of the system shown in Figure 3–51.

Solution. The system involves one integrator and two delayed integrators. The output of each integrator or delayed integrator can be a state variable. Let us define the output of the plant as x_1, the output of the controller as x_2, and the output of the sensor as x_3. Then we obtain

$$\frac{X_1(s)}{X_2(s)} = \frac{10}{s+5}$$

$$\frac{X_2(s)}{U(s) - X_3(s)} = \frac{1}{s}$$

$$\frac{X_3(s)}{X_1(s)} = \frac{1}{s+1}$$

$$Y(s) = X_1(s)$$

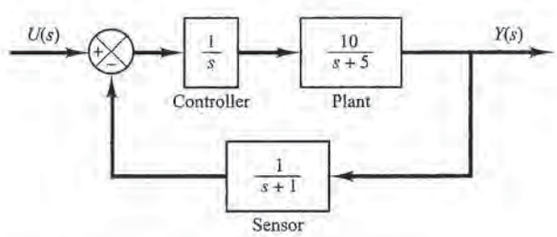

Figure 3–51
Control system.

PETITIONER'S EXHIBIT 1002
US PATENT NO. 6,581,565
Page 9922

which can be rewritten as

$$
\begin{aligned}
sX_1(s) &= -5X_1(s) + 10X_2(s) \\
sX_2(s) &= -X_3(s) + U(s) \\
sX_3(s) &= X_1(s) - X_3(s) \\
Y(s) &= X_1(s)
\end{aligned}
$$

By taking the inverse Laplace transforms of the preceding four equations, we obtain

$$
\begin{aligned}
\dot{x}_1 &= -5x_1 + 10x_2 \\
\dot{x}_2 &= -x_3 + u \\
\dot{x}_3 &= x_1 - x_3 \\
y &= x_1
\end{aligned}
$$

Thus, a state-space model of the system in the standard form is given by

$$
\begin{bmatrix} \dot{x}_1 \\ \dot{x}_2 \\ \dot{x}_3 \end{bmatrix} = \begin{bmatrix} -5 & 10 & 0 \\ 0 & 0 & -1 \\ 1 & 0 & -1 \end{bmatrix} \begin{bmatrix} x_1 \\ x_2 \\ x_3 \end{bmatrix} + \begin{bmatrix} 0 \\ 1 \\ 0 \end{bmatrix} u
$$

$$
y = \begin{bmatrix} 1 & 0 & 0 \end{bmatrix} \begin{bmatrix} x_1 \\ x_2 \\ x_3 \end{bmatrix}
$$

It is important to note that this is not the only state-space representation of the system. Many other state-space representations are possible. However, the number of state variables is the same in any state-space representation of the same system. In the present system, the number of state variables is three, regardless of what variables are chosen as state variables.

A–3–9. Obtain a state-space model for the system shown in Figure 3–52(a).

Solution. First, notice that $(as + b)/s^2$ involves a derivative term. Such a derivative term may be avoided if we modify $(as + b)/s^2$ as

$$
\frac{as + b}{s^2} = \left(a + \frac{b}{s}\right)\frac{1}{s}
$$

Using this modification, the block diagram of Figure 3–52(a) can be modified to that shown in Figure 3–52(b).

Define the outputs of the integrators as state variables, as shown in Figure 3–52(b). Then from Figure 3–52(b) we obtain

$$
\begin{aligned}
\frac{X_1(s)}{X_2(s) + a[U(s) - X_1(s)]} &= \frac{1}{s} \\
\frac{X_2(s)}{U(s) - X_1(s)} &= \frac{b}{s} \\
Y(s) &= X_1(s)
\end{aligned}
$$

which may be modified to

$$
\begin{aligned}
sX_1(s) &= X_2(s) + a[U(s) - X_1(s)] \\
sX_2(s) &= -bX_1(s) + bU(s) \\
Y(s) &= X_1(s)
\end{aligned}
$$

PETITIONER'S EXHIBIT 1002
US PATENT NO. 6,581,565
Page 9923

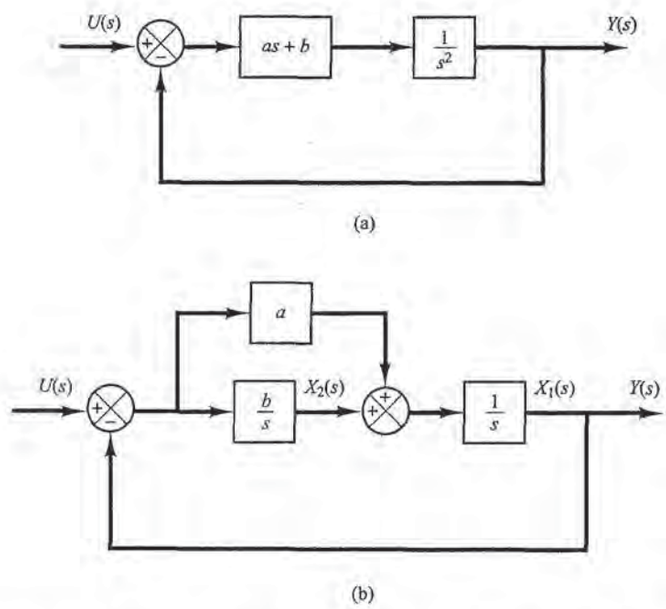

Figure 3–52
(a) Control system;
(b) modified block diagram.

Taking the inverse Laplace transforms of the preceding three equations, we obtain

$$\dot{x}_1 = -ax_1 + x_2 + au$$
$$\dot{x}_2 = -bx_1 + bu$$
$$y = x_1$$

Rewriting the state and output equations in the standard vector-matrix form, we obtain

$$\begin{bmatrix} \dot{x}_1 \\ \dot{x}_2 \end{bmatrix} = \begin{bmatrix} -a & 1 \\ -b & 0 \end{bmatrix} \begin{bmatrix} x_1 \\ x_2 \end{bmatrix} + \begin{bmatrix} a \\ b \end{bmatrix} u$$
$$y = \begin{bmatrix} 1 & 0 \end{bmatrix} \begin{bmatrix} x_1 \\ x_2 \end{bmatrix}$$

A–3–10. Obtain a state-space representation of the system shown in Figure 3–53(a).

Solution. In this problem, first expand $(s + z)/(s + p)$ into partial fractions.

$$\frac{s + z}{s + p} = 1 + \frac{z - p}{s + p}$$

Next, convert $K/[s(s + a)]$ into the product of K/s and $1/(s + a)$. Then redraw the block diagram, as shown in Figure 3–53(b). Defining a set of state variables, as shown in Figure 3–53(b), we obtain the following equations:

$$\dot{x}_1 = -ax_1 + x_2$$
$$\dot{x}_2 = -Kx_1 + Kx_3 + Ku$$
$$\dot{x}_3 = -(z - p)x_1 - px_3 + (z - p)u$$
$$y = x_1$$

PETITIONER'S EXHIBIT 1002
US PATENT NO. 6,581,565
Page 9924

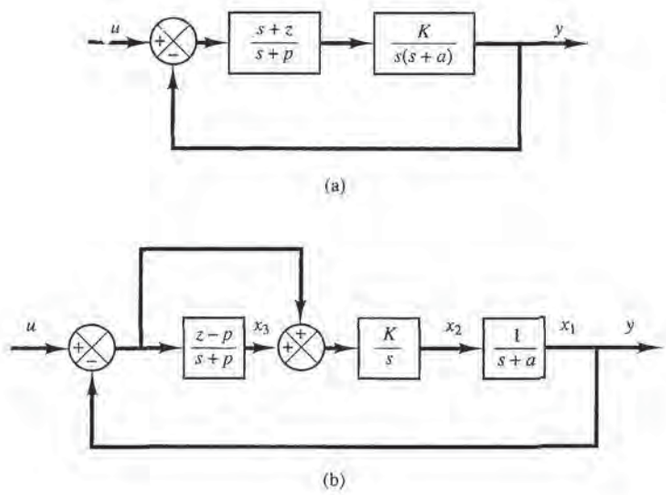

igure 3–53
a) Control system;
b) block diagram
efining state
ariables for the
stem.

Rewriting gives

$$\begin{bmatrix} \dot{x}_1 \\ \dot{x}_2 \\ \dot{x}_3 \end{bmatrix} = \begin{bmatrix} -a & 1 & 0 \\ -K & 0 & K \\ -(z-p) & 0 & -p \end{bmatrix} \begin{bmatrix} x_1 \\ x_2 \\ x_3 \end{bmatrix} + \begin{bmatrix} 0 \\ K \\ z-p \end{bmatrix} u$$

$$y = [1 \quad 0 \quad 0] \begin{bmatrix} x_1 \\ x_2 \\ x_3 \end{bmatrix}$$

Notice that the output of the integrator and the outputs of the first-order delayed integrators $[1/(s+a)$ and $(z-p)/(s+p)]$ are chosen as state variables. It is important to remember that the output of the block $(s+z)/(s+p)$ in Figure 3–53(a) cannot be a state variable, because this block involves a derivative term, $s+z$.

A–3–11. Obtain the transfer function of the system defined by

$$\begin{bmatrix} \dot{x}_1 \\ \dot{x}_2 \\ \dot{x}_3 \end{bmatrix} = \begin{bmatrix} -1 & 1 & 0 \\ 0 & -1 & 1 \\ 0 & 0 & -2 \end{bmatrix} \begin{bmatrix} x_1 \\ x_2 \\ x_3 \end{bmatrix} + \begin{bmatrix} 0 \\ 0 \\ 1 \end{bmatrix} u$$

$$y = [1 \quad 0 \quad 0] \begin{bmatrix} x_1 \\ x_2 \\ x_3 \end{bmatrix}$$

Solution. Referring to Equation (3–29), the transfer function $G(s)$ is given by

$$G(s) = \mathbf{C}(s\mathbf{I} - \mathbf{A})^{-1}\mathbf{B} + D$$

In this problem, matrices $\mathbf{A}$, $\mathbf{B}$, $\mathbf{C}$, and D are

$$\mathbf{A} = \begin{bmatrix} -1 & 1 & 0 \\ 0 & -1 & 1 \\ 0 & 0 & -2 \end{bmatrix}, \quad \mathbf{B} = \begin{bmatrix} 0 \\ 0 \\ 1 \end{bmatrix}, \quad \mathbf{C} = [1 \quad 0 \quad 0], \quad D = 0$$

PETITIONER'S EXHIBIT 1002
US PATENT NO. 6,581,565
Page 9925

Hence

$$G(s) = [1 \quad 0 \quad 0]\begin{bmatrix} s+1 & -1 & 0 \\ 0 & s+1 & -1 \\ 0 & 0 & s+2 \end{bmatrix}^{-1}\begin{bmatrix} 0 \\ 0 \\ 1 \end{bmatrix}$$

$$= [1 \quad 0 \quad 0]\begin{bmatrix} \dfrac{1}{s+1} & \dfrac{1}{(s+1)^2} & \dfrac{1}{(s+1)^2(s+2)} \\ 0 & \dfrac{1}{s+1} & \dfrac{1}{(s+1)(s+2)} \\ 0 & 0 & \dfrac{1}{s+2} \end{bmatrix}\begin{bmatrix} 0 \\ 0 \\ 1 \end{bmatrix}$$

$$= \frac{1}{(s+1)^2(s+2)} = \frac{1}{s^3 + 4s^2 + 5s + 2}$$

A–3–12. Obtain a state-space representation of the system shown in Figure 3–54.

Solution. The system equations are

$$m_1\ddot{y}_1 + b\dot{y}_1 + k(y_1 - y_2) = 0$$
$$m_2\ddot{y}_2 + k(y_2 - y_1) = u$$

The output variables for this system are y_1 and y_2. Define state variables as

$$x_1 = y_1$$
$$x_2 = \dot{y}_1$$
$$x_3 = y_2$$
$$x_4 = \dot{y}_2$$

Then we obtain the following equations:

$$\dot{x}_1 = x_2$$
$$\dot{x}_2 = \frac{1}{m_1}[-b\dot{y}_1 - k(y_1 - y_2)] = -\frac{k}{m_1}x_1 - \frac{b}{m_1}x_2 + \frac{k}{m_1}x_3$$
$$\dot{x}_3 = x_4$$
$$\dot{x}_4 = \frac{1}{m_2}[-k(y_2 - y_1) + u] = \frac{k}{m_2}x_1 - \frac{k}{m_2}x_3 + \frac{1}{m_2}u$$

Hence, the state equation is

$$\begin{bmatrix} \dot{x}_1 \\ \dot{x}_2 \\ \dot{x}_3 \\ \dot{x}_4 \end{bmatrix} = \begin{bmatrix} 0 & 1 & 0 & 0 \\ -\dfrac{k}{m_1} & -\dfrac{b}{m_1} & \dfrac{k}{m_1} & 0 \\ 0 & 0 & 0 & 1 \\ \dfrac{k}{m_2} & 0 & -\dfrac{k}{m_2} & 0 \end{bmatrix}\begin{bmatrix} x_1 \\ x_2 \\ x_3 \\ x_4 \end{bmatrix} + \begin{bmatrix} 0 \\ 0 \\ 0 \\ \dfrac{1}{m_2} \end{bmatrix}u$$

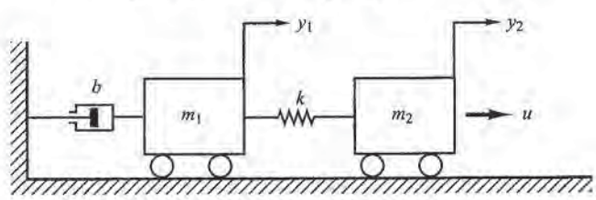

Figure 3–54
Mechanical system.

PETITIONER'S EXHIBIT 1002
US PATENT NO. 6,581,565
Page 9926

and the output equation is

$$\begin{bmatrix} y_1 \\ y_2 \end{bmatrix} = \begin{bmatrix} 1 & 0 & 0 & 0 \\ 0 & 0 & 1 & 0 \end{bmatrix} \begin{bmatrix} x_1 \\ x_2 \\ x_3 \\ x_4 \end{bmatrix}$$

A–3–13. Consider a system with multiple inputs and multiple outputs. When the system has more than one output, the command

```
[NUM,den] = ss2tf(A,B,C,D,iu)
```

produces transfer functions for all outputs to each input. (The numerator coefficients are returned to matrix NUM with as many rows as there are outputs.)

Consider the system defined by

$$\begin{bmatrix} \dot{x}_1 \\ \dot{x}_2 \end{bmatrix} = \begin{bmatrix} 0 & 1 \\ -25 & -4 \end{bmatrix} \begin{bmatrix} x_1 \\ x_2 \end{bmatrix} + \begin{bmatrix} 1 & 1 \\ 0 & 1 \end{bmatrix} \begin{bmatrix} u_1 \\ u_2 \end{bmatrix}$$

$$\begin{bmatrix} y_1 \\ y_2 \end{bmatrix} = \begin{bmatrix} 1 & 0 \\ 0 & 1 \end{bmatrix} \begin{bmatrix} x_1 \\ x_2 \end{bmatrix} + \begin{bmatrix} 0 & 0 \\ 0 & 0 \end{bmatrix} \begin{bmatrix} u_1 \\ u_2 \end{bmatrix}$$

This system involves two inputs and two outputs. Four transfer functions are involved: $Y_1(s)/U_1(s)$, $Y_2(s)/U_1(s)$, $Y_1(s)/U_2(s)$, and $Y_2(s)/U_2(s)$. (When considering input u_1, we assume that input u_2 is zero and vice versa.)

Solution. MATLAB Program 3-5 produces four transfer functions.

MATLAB Program 3–5

```
A = [0   1;-25   -4];
B = [1   1;0   1];
C = [1   0;0   1];
D = [0   0;0   0];
[NUM,den] = ss2tf(A,B,C,D,1)

NUM =
        0     1     4
        0     0   -25

den =

        1     4    25

[NUM,den] = ss2tf(A,B,C,D,2)

NUM =

     0  1.0000    5.0000
     0  1.0000  -25.0000

den =

        1     4    25
```


PETITIONER'S EXHIBIT 1002
US PATENT NO. 6,581,565
Page 9927

This is the MATLAB representation of the following four transfer functions:

$$\frac{Y_1(s)}{U_1(s)} = \frac{s+4}{s^2+4s+25}, \qquad \frac{Y_2(s)}{U_1(s)} = \frac{-25}{s^2+4s+25}$$

$$\frac{Y_1(s)}{U_2(s)} = \frac{s+5}{s^2+4s+25}, \qquad \frac{Y_2(s)}{U_2(s)} = \frac{s-25}{s^2+4s+25}$$

A–3–14. Obtain the equivalent spring constants for the systems shown in Figures 3–55(a) and (b), respectively.

Solution. For the springs in parallel [Figure 3–55(a)] the equivalent spring constant k_{eq} is obtained from

$$k_1 x + k_2 x = F = k_{eq} x$$

or

$$k_{eq} = k_1 + k_2$$

For the springs in series [Figure–55(b)], the force in each spring is the same. Thus

$$k_1 y = F, \qquad k_2(x - y) = F$$

Elimination of y from these two equations results in

$$k_2\left(x - \frac{F}{k_1}\right) = F$$

or

$$k_2 x = F + \frac{k_2}{k_1} F = \frac{k_1 + k_2}{k_1} F$$

The equivalent spring constant k_{eq} for this case is then found as

$$k_{eq} = \frac{F}{x} = \frac{k_1 k_2}{k_1 + k_2} = \frac{1}{\dfrac{1}{k_1} + \dfrac{1}{k_2}}$$

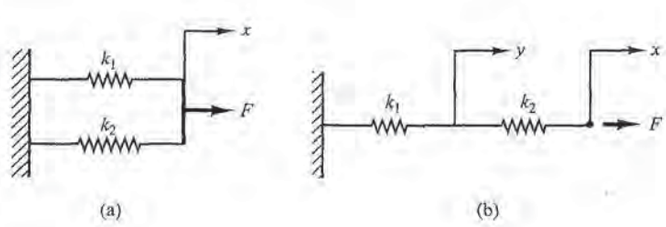

Figure 3–55
(a) System consisting of two springs in parallel;
(b) system consisting of two springs in series.

PETITIONER'S EXHIBIT 1002
US PATENT NO. 6,581,565
Page 9928

A–3–15. Obtain the equivalent viscous-friction coefficient b_{eq} for each of the systems shown in Figure 3–56(a) and (b).

Solution.

(a) The force f due to the dampers is

$$f = b_1(\dot{y} - \dot{x}) + b_2(\dot{y} - \dot{x}) = (b_1 + b_2)(\dot{y} - \dot{x})$$

In terms of the equivalent viscous friction coefficient b_{eq}, force f is given by

$$f = b_{eq}(\dot{y} - \dot{x})$$

Hence

$$b_{eq} = b_1 + b_2$$

(b) The force f due to the dampers is

$$f = b_1(\dot{z} - \dot{x}) = b_2(\dot{y} - \dot{z}) \tag{3–105}$$

where z is the displacement of a point between damper b_1 and damper b_2. (Note that the same force is transmitted through the shaft.) From Equation (3–105), we have

$$(b_1 + b_2)\dot{z} = b_2\dot{y} + b_1\dot{x}$$

or

$$\dot{z} = \frac{1}{b_1 + b_2}(b_2\dot{y} + b_1\dot{x}) \tag{3–106}$$

In terms of the equivalent viscous friction coefficient b_{eq}, force f is given by

$$f = b_{eq}(\dot{y} - \dot{x})$$

By substituting Equation (3–106) into Equation (3–105), we have

$$f = b_2(\dot{y} - \dot{z}) = b_2\left[\dot{y} - \frac{1}{b_1 + b_2}(b_2\dot{y} + b_1\dot{x})\right]$$

$$= \frac{b_1 b_2}{b_1 + b_2}(\dot{y} - \dot{x})$$

Thus,

$$f = b_{eq}(\dot{y} - \dot{x}) = \frac{b_1 b_2}{b_1 + b_2}(\dot{y} - \dot{x})$$

Hence,

$$b_{eq} = \frac{b_1 b_2}{b_1 + b_2} = \frac{1}{\dfrac{1}{b_1} + \dfrac{1}{b_2}}$$

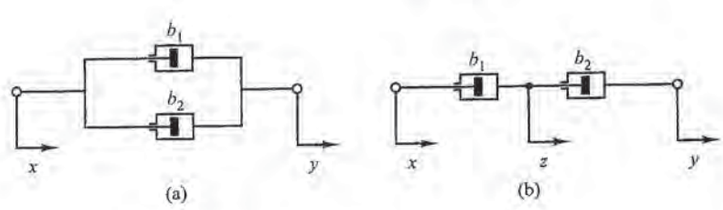

Figure 3–56
(a) Two dampers connected in parallel; (b) two dampers connected in series.

PETITIONER'S EXHIBIT 1002
US PATENT NO. 6,581,565
Page 9929

A–3–16. Figure 3–57(a) shows a schematic diagram of an automobile suspension system. As the car moves along the road, the vertical displacements at the tires act as the motion excitation to the automobile suspension system. The motion of this system consists of a translational motion of the center of mass and a rotational motion about the center of mass. Mathematical modeling of the complete system is quite complicated.

A very simplified version of the suspension system is shown in Figure 3–57(b). Assuming that the motion x_i at point P is the input to the system and the vertical motion x_o of the body is the output, obtain the transfer function $X_o(s)/X_i(s)$. (Consider the motion of the body only in the vertical direction.) Displacement x_o is measured from the equilibrium position in the absence of input x_i.

Solution. The equation of motion for the system shown in Figure 3–57(b) is

$$m\ddot{x}_o + b(\dot{x}_o - \dot{x}_i) + k(x_o - x_i) = 0$$

or

$$m\ddot{x}_o + b\dot{x}_o + kx_o = b\dot{x}_i + kx_i$$

Taking the Laplace transform of this last equation, assuming zero initial conditions, we obtain

$$(ms^2 + bs + k)X_o(s) = (bs + k)X_i(s)$$

Hence the transfer function $X_o(s)/X_i(s)$ is given by

$$\frac{X_o(s)}{X_i(s)} = \frac{bs + k}{ms^2 + bs + k}$$

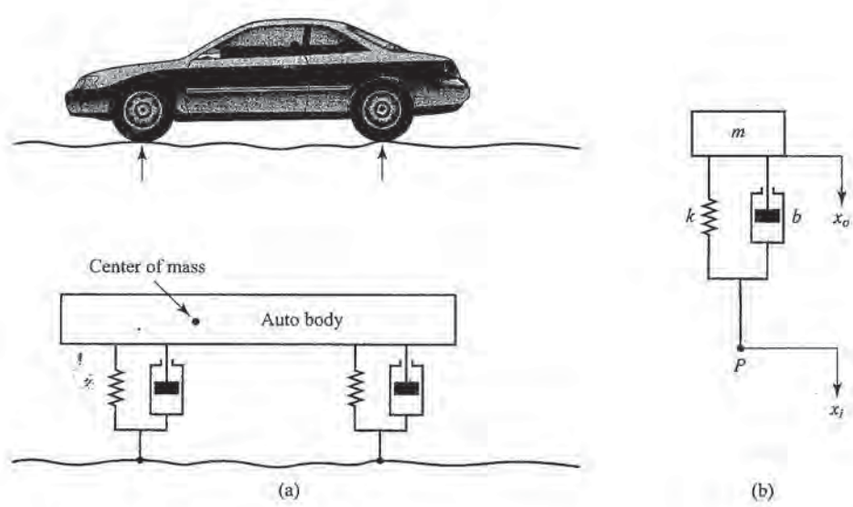

Figure 3–57
(a) Automobile suspension system; (b) simplified suspension system.

PETITIONER'S EXHIBIT 1002
US PATENT NO. 6,581,565
Page 9930

A–3–17. Obtain the transfer function $Y(s)/U(s)$ of the system shown in Figure 3–58. The input u is a displacement input. (Like the system of Problem **A–3–16**, this is also a simplified version of an automobile or motorcycle suspension system.)

Solution. Assume that displacements x and y are measured from respective steady-state positions in the absence of the input u. Applying the Newton's second law to this system, we obtain

$$m_1\ddot{x} = k_2(y - x) + b(\dot{y} - \dot{x}) + k_1(u - x)$$

$$m_2\ddot{y} = -k_2(y - x) - b(\dot{y} - \dot{x})$$

Hence, we have

$$m_1\ddot{x} + b\dot{x} + (k_1 + k_2)x = b\dot{y} + k_2 y + k_1 u$$

$$m_2\ddot{y} + b\dot{y} + k_2 y = b\dot{x} + k_2 x$$

Taking Laplace transforms of these two equations, assuming zero initial conditions, we obtain

$$[m_1 s^2 + bs + (k_1 + k_2)]X(s) = (bs + k_2)Y(s) + k_1 U(s)$$

$$[m_2 s^2 + bs + k_2]Y(s) = (bs + k_2)X(s)$$

Eliminating $X(s)$ from the last two equations, we have

$$(m_1 s^2 + bs + k_1 + k_2)\frac{m_2 s^2 + bs + k_2}{bs + k_2}Y(s) = (bs + k_2)Y(s) + k_1 U(s)$$

which yields

$$\frac{Y(s)}{U(s)} = \frac{k_1(bs + k_2)}{m_1 m_2 s^4 + (m_1 + m_2)bs^3 + [k_1 m_2 + (m_1 + m_2)k_2]s^2 + k_1 bs + k_1 k_2}$$

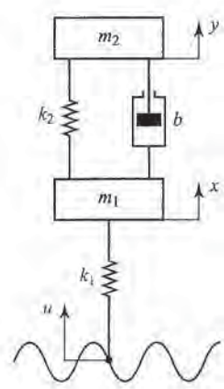

Figure 3–58
Suspension system.

A–3–18. Obtain the transfer function of the mechanical system shown in Figure 3–59(a). Also obtain the transfer function of the electrical system shown in Figure 3–59(b). Show that the transfer functions of the two systems are of identical form and thus they are analogous systems.

Solution. In Figure 3–59(a) we assume that displacements x_i, x_o, and y are measured from their respective steady-state positions. Then the equations of motion for the mechanical system shown in Figure 3–59(a) are

PETITIONER'S EXHIBIT 1002
US PATENT NO. 6,581,565
Page 9931

$$b_1(\dot{x}_i - \dot{x}_o) + k_1(x_i - x_o) = b_2(\dot{x}_o - \dot{y})$$
$$b_2(\dot{x}_o - \dot{y}) = k_2 y$$

By taking the Laplace transforms of these two equations, assuming zero initial conditions, we have

$$b_1[sX_i(s) - sX_o(s)] + k_1[X_i(s) - X_o(s)] = b_2[sX_o(s) - sY(s)]$$
$$b_2[sX_o(s) - sY(s)] = k_2 Y(s)$$

If we eliminate $Y(s)$ from the last two equations, then we obtain

$$b_1[sX_i(s) - sX_o(s)] + k_1[X_i(s) - X_o(s)] = b_2 s X_o(s) - b_2 s \frac{b_2 s X_o(s)}{b_2 s + k_2}$$

or

$$(b_1 s + k_1)X_i(s) = \left(b_1 s + k_1 + b_2 s - b_2 s \frac{b_2 s}{b_2 s + k_2}\right)X_o(s)$$

Hence the transfer function $X_o(s)/X_i(s)$ can be obtained as

$$\frac{X_o(s)}{X_i(s)} = \frac{\left(\frac{b_1}{k_1}s + 1\right)\left(\frac{b_2}{k_2}s + 1\right)}{\left(\frac{b_1}{k_1}s + 1\right)\left(\frac{b_2}{k_2}s + 1\right) + \frac{b_2}{k_1}s}$$

For the electrical system shown in Figure 3–59(b), the transfer function $E_o(s)/E_i(s)$ is found to be

$$\frac{E_o(s)}{E_i(s)} = \frac{R_1 + \frac{1}{C_1 s}}{\frac{1}{(1/R_2) + C_2 s} + R_1 + \frac{1}{C_1 s}}$$
$$= \frac{(R_1 C_1 s + 1)(R_2 C_2 s + 1)}{(R_1 C_1 s + 1)(R_2 C_2 s + 1) + R_2 C_1 s}$$

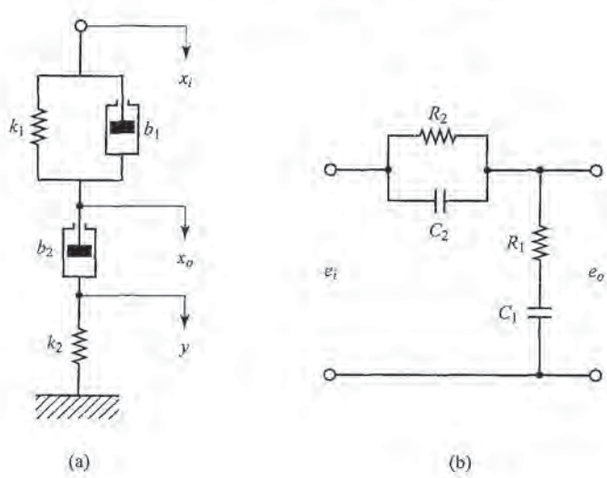

Figure 3–59
(a) Mechanical system;
(b) analogous electrical system.

PETITIONER'S EXHIBIT 1002
US PATENT NO. 6,581,565
Page 9932

A comparison of the transfer functions shows that the systems shown in Figures 3–59(a) and (b) are analogous.

A–3–19. Obtain the transfer functions $E_o(s)/E_i(s)$ of the bridged T networks shown in Figures 3–60(a) and (b).

Solution. The bridged T networks shown can both be represented by the network of Figure 3–61(a), where we used complex impedances. This network may be modified to that, shown in Figure 3–61(b).

In Figure 3–61(b), note that

$$I_1 = I_2 + I_3, \qquad I_2 Z_1 = (Z_3 + Z_4) I_3$$

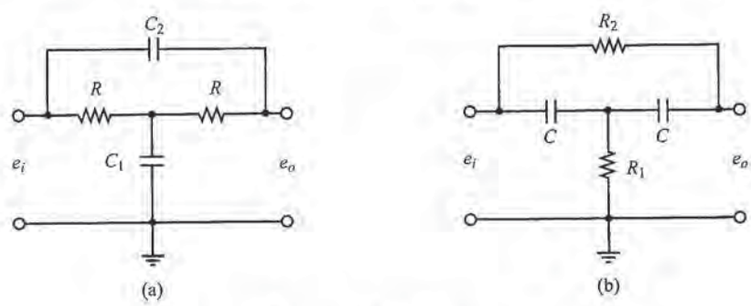

Figure 3–60
Bridged T networks.

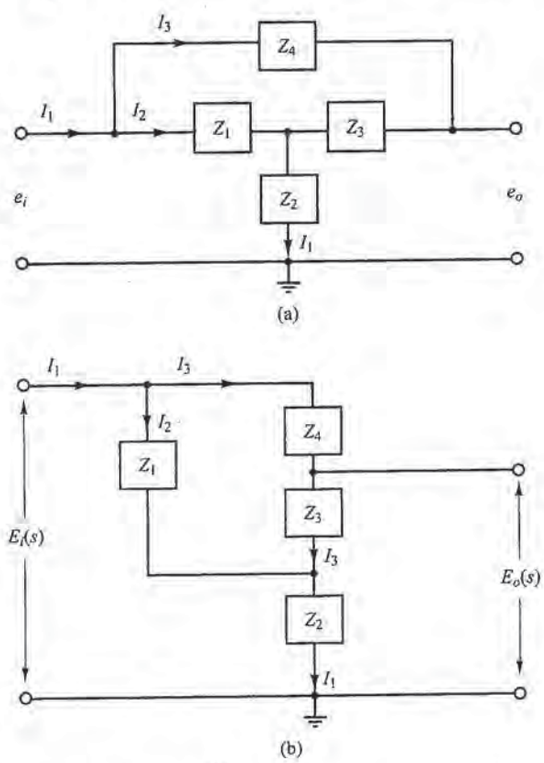

Figure 3–61
(a) Bridged T network in terms of complex impedances; (b) equivalent network.

PETITIONER'S EXHIBIT 1002
US PATENT NO. 6,581,565
Page 9933

Hence

$$I_2 = \frac{Z_3 + Z_4}{Z_1 + Z_3 + Z_4} I_1, \qquad I_3 = \frac{Z_1}{Z_1 + Z_3 + Z_4} I_1$$

Then the voltages $E_i(s)$ and $E_o(s)$ can be obtained as

$$\begin{aligned} E_i(s) &= Z_1 I_2 + Z_2 I_1 \\ &= \left[Z_2 + \frac{Z_1(Z_3 + Z_4)}{Z_1 + Z_3 + Z_4} \right] I_1 \\ &= \frac{Z_2(Z_1 + Z_3 + Z_4) + Z_1(Z_3 + Z_4)}{Z_1 + Z_3 + Z_4} I_1 \end{aligned}$$

$$\begin{aligned} E_o(s) &= Z_3 I_3 + Z_2 I_1 \\ &= \frac{Z_3 Z_1}{Z_1 + Z_3 + Z_4} I_1 + Z_2 I_1 \\ &= \frac{Z_3 Z_1 + Z_2(Z_1 + Z_3 + Z_4)}{Z_1 + Z_3 + Z_4} I_1 \end{aligned}$$

Hence, the transfer function $E_o(s)/E_i(s)$ of the network shown in Figure 3–61(a) is obtained as

$$\frac{E_o(s)}{E_i(s)} = \frac{Z_3 Z_1 + Z_2(Z_1 + Z_3 + Z_4)}{Z_2(Z_1 + Z_3 + Z_4) + Z_1 Z_3 + Z_1 Z_4} \tag{3–107}$$

For the bridged T network shown in Figure 3–60(a), substitute

$$Z_1 = R, \qquad Z_2 = \frac{1}{C_1 s}, \qquad Z_3 = R, \qquad Z_4 = \frac{1}{C_2 s}$$

into Equation (3–107). Then, we obtain the transfer function $E_o(s)/E_i(s)$ to be

$$\begin{aligned} \frac{E_o(s)}{E_i(s)} &= \frac{R^2 + \frac{1}{C_1 s}\left(R + R + \frac{1}{C_2 s}\right)}{\frac{1}{C_1 s}\left(R + R + \frac{1}{C_2 s}\right) + R^2 + R\frac{1}{C_2 s}} \\ &= \frac{RC_1 RC_2 s^2 + 2RC_2 s + 1}{RC_1 RC_2 s^2 + (2RC_2 + RC_1)s + 1} \end{aligned}$$

Similarly, for the bridged T network shown in Figure 3–60(b), we substitute

$$Z_1 = \frac{1}{Cs}, \qquad Z_2 = R_1, \qquad Z_3 = \frac{1}{Cs}, \qquad Z_4 = R_2$$

into Equation (3–107). Then the transfer function $E_o(s)/E_i(s)$ can be obtained as follows:

$$\begin{aligned} \frac{E_o(s)}{E_i(s)} &= \frac{\frac{1}{Cs}\frac{1}{Cs} + R_1\left(\frac{1}{Cs} + \frac{1}{Cs} + R_2\right)}{R_1\left(\frac{1}{Cs} + \frac{1}{Cs} + R_2\right) + \frac{1}{Cs}\frac{1}{Cs} + R_2\frac{1}{Cs}} \\ &= \frac{R_1 C R_2 C s^2 + 2R_1 C s + 1}{R_1 C R_2 C s^2 + (2R_1 C + R_2 C)s + 1} \end{aligned}$$

PETITIONER'S EXHIBIT 1002
US PATENT NO. 6,581,565
Page 9934

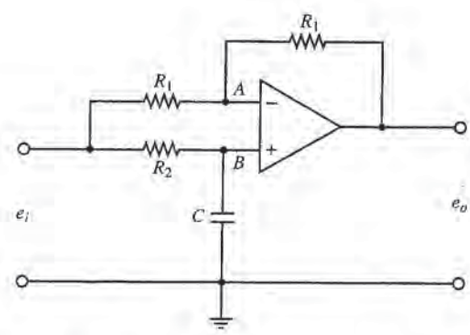

Figure 3–62
Operational-amplifier circuit.

A–3–20. Obtain the transfer function $E_o(s)/E_i(s)$ of the op-amp circuit shown in Figure 3–62.

Solution. The voltage at point A is

$$e_A = \frac{1}{2}(e_i - e_o) + e_o$$

The Laplace-trasformed version of this last equation is

$$E_A(s) = \frac{1}{2}[E_i(s) + E_o(s)]$$

The voltage at point B is

$$E_B(s) = \frac{\frac{1}{Cs}}{R_2 + \frac{1}{Cs}} E_i(s) = \frac{1}{R_2Cs + 1} E_i(s)$$

Since $[E_B(s) - E_A(s)]K = E_o(s)$ and $K \gg 1$, we must have $E_A(s) = E_B(s)$. Thus

$$\frac{1}{2}[E_i(s) + E_o(s)] = \frac{1}{R_2Cs + 1} E_i(s)$$

Hence

$$\frac{E_o(s)}{E_i(s)} = -\frac{R_2Cs - 1}{R_2Cs + 1} = -\frac{s - \frac{1}{R_2C}}{s + \frac{1}{R_2C}}$$

A–3–21. Obtain the transfer function $E_o(s)/E_i(s)$ of the op-amp system shown in Figure 3–63 in terms of complex impedances Z_1, Z_2, Z_3, and Z_4. Using the equation derived, obtain the transfer function $E_o(s)/E_i(s)$ of the op-amp system shown in Figure 3–62.

Solution. From Figure 3–63, we find

$$\frac{E_i(s) - E_A(s)}{Z_3} = \frac{E_A(s) - E_o(s)}{Z_4}$$

PETITIONER'S EXHIBIT 1002
US PATENT NO. 6,581,565
Page 9935

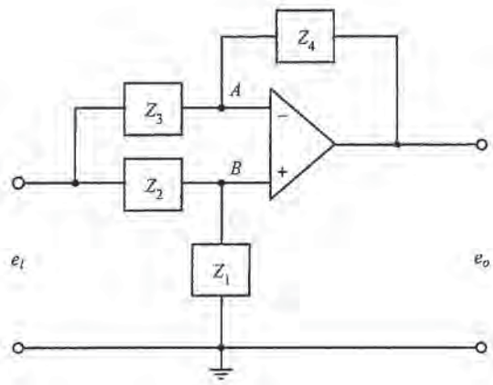

Figure 3–63
Operational-amplifier circuit.

or

$$E_i(s) - \left(1 + \frac{Z_3}{Z_4}\right)E_A(s) = -\frac{Z_3}{Z_4}E_o(s) \tag{3–108}$$

Since

$$E_A(s) = E_B(s) = \frac{Z_1}{Z_1 + Z_2}E_i(s) \tag{3–109}$$

by substituting Equation (3–109) into Equation (3–108), we obtain

$$\left[\frac{Z_4Z_1 + Z_4Z_2 - Z_4Z_1 - Z_3Z_1}{Z_4(Z_1 + Z_2)}\right]E_i(s) = -\frac{Z_3}{Z_4}E_o(s)$$

from which we get the transfer function $E_o(s)/E_i(s)$ to be

$$\frac{E_o(s)}{E_i(s)} = -\frac{Z_4Z_2 - Z_3Z_1}{Z_3(Z_1 + Z_2)} \tag{3–110}$$

To find the transfer function $E_o(s)/E_i(s)$ of the circuit shown in Figure 3–62, we substitute

$$Z_1 = \frac{1}{Cs}, \qquad Z_2 = R_2, \qquad Z_3 = R_1, \qquad Z_4 = R_1$$

into Equation (3–110). The result is

$$\frac{E_o(s)}{E_i(s)} = -\frac{R_1R_2 - R_1\dfrac{1}{Cs}}{R_1\left(\dfrac{1}{Cs} + R_2\right)} = -\frac{R_2Cs - 1}{R_2Cs + 1}$$

which is, as a matter of course, the same as that obtained in Problem **A–3–20**.

PETITIONER'S EXHIBIT 1002
US PATENT NO. 6,581,565
Page 9936

A–3–22. Obtain the transfer function $E_o(s)/E_i(s)$ of the operational-amplifier circuit shown in Figure 3–64.

Solution. We will first obtain currents i_1, i_2, i_3, i_4, and i_5. Then we will use node equations at nodes A and B.

$$i_1 = \frac{e_i - e_A}{R_1}; \qquad i_2 = \frac{e_A - e_o}{R_3}, \qquad i_3 = C_1\frac{de_A}{dt}$$

$$i_4 = \frac{e_A}{R_2}, \qquad i_5 = C_2\frac{-de_o}{dt}$$

At node A, we have $i_1 = i_2 + i_3 + i_4$, or

$$\frac{e_i - e_A}{R_1} = \frac{e_A - e_o}{R_3} + C_1\frac{de_A}{dt} + \frac{e_A}{R_2} \tag{3–111}$$

At node B, we get $i_4 = i_5$, or

$$\frac{e_A}{R_2} = C_2\frac{-de_o}{dt} \tag{3–112}$$

By rewriting Equation (3–111), we have

$$C_1\frac{de_A}{dt} + \left(\frac{1}{R_1} + \frac{1}{R_2} + \frac{1}{R_3}\right)e_A = \frac{e_i}{R_1} + \frac{e_o}{R_3} \tag{3–113}$$

From Equation (3–112), we get

$$e_A = -R_2C_2\frac{de_o}{dt} \tag{3–114}$$

By substituting Equation (3–114) into Equation (3–113), we obtain

$$C_1\left(-R_2C_2\frac{d^2e_o}{dt^2}\right) + \left(\frac{1}{R_1} + \frac{1}{R_2} + \frac{1}{R_3}\right)(-R_2C_2)\frac{de_o}{dt} = \frac{e_i}{R_1} + \frac{e_o}{R_3}$$

Taking the Laplace transform of this last equation, assuming zero initial conditions, we obtain

$$-C_1C_2R_2s^2E_o(s) + \left(\frac{1}{R_1} + \frac{1}{R_2} + \frac{1}{R_3}\right)(-R_2C_2)sE_o(s) - \frac{1}{R_3}E_o(s) = \frac{E_i(s)}{R_1}$$

from which we get the transfer function $E_o(s)/E_i(s)$ as follows:

$$\frac{E_o(s)}{E_i(s)} = -\frac{1}{R_1C_1R_2C_2s^2 + [R_2C_2 + R_1C_2 + (R_1/R_3)R_2C_2]s + (R_1/R_3)}$$

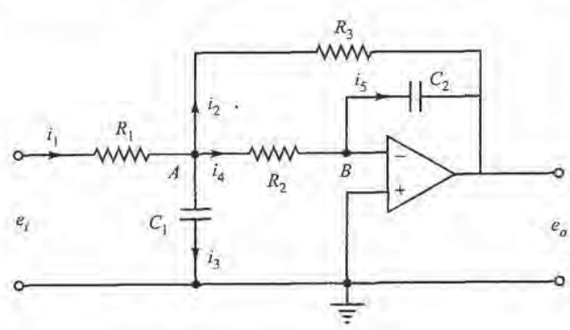

Figure 3–64
Operational-amplifier circuit.

PETITIONER'S EXHIBIT 1002
US PATENT NO. 6,581,565
Page 9937

A–3–23. Consider the servo system shown in Figure 3–65(a). The motor shown is a servomotor, a dc motor designed specifically to be used in a control system. The operation of this system is as follows: A pair of potentiometers acts as an error-measuring device. They convert the input and output positions into proportional electric signals. The command input signal determines the angular position r of the wiper arm of the input potentiometer. The angular position r is the reference input to the system, and the electric potential of the arm is proportional to the angular position of the arm. The output shaft position determines the angular position c of the wiper arm of the output potentiometer. The difference between the input angular position r and the output angular position c is the error signal e, or

$$e = r - c$$

The potential difference $e_r - e_c = e_v$ is the error voltage, where e_r is proportional to r and e_c is proportional to c; that is, $e_r = K_0 r$ and $e_c = K_0 c$, where K_0 is a proportionality constant. The error voltage that appears at the potentiometer terminals is amplified by the amplifier whose gain constant is K_1. The output voltage of this amplifier is applied to the armature circuit of the dc motor. A fixed voltage is applied to the field winding. If an error exists, the motor develops a torque to rotate the output load in such a way as to reduce the error to zero. For constant field current, the torque developed by the motor is

$$T = K_2 i_a$$

where K_2 is the motor torque constant and i_a is the armature current.

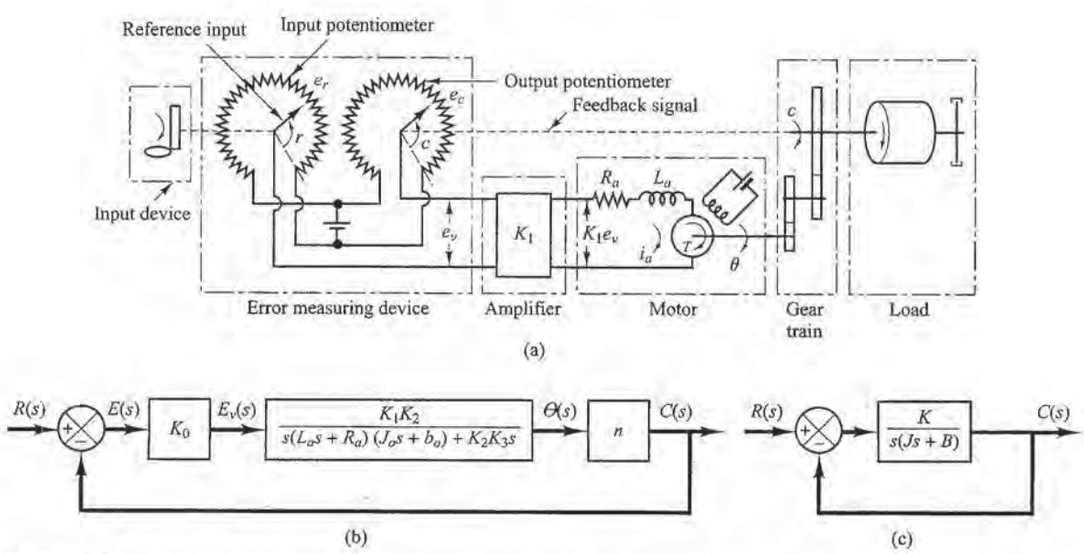

Figure 3–65
(a) Schematic diagram of servo system; (b) block diagram for the system; (c) simplified block diagram.

PETITIONER'S EXHIBIT 1002
US PATENT NO. 6,581,565
Page 9938

When the armature is rotating, a voltage proportional to the product of the flux and angular velocity is induced in the armature. For a constant flux, the induced voltage e_b is directly proportional to the angular velocity $d\theta/dt$, or

$$e_b = K_3 \frac{d\theta}{dt}$$

where e_b is the back emf, K_3 is the back emf constant of the motor, and θ is the angular displacement of the motor shaft.

Obtain the transfer function between the motor shaft angular displacement θ and the error voltage e_v. Obtain also a block diagram for this system and a simplified block diagram when L_a is negligible.

Solution. The speed of an armature-controlled dc servomotor is controlled by the armature voltage e_a. (The armature voltage $e_a = K_1 e_v$ is the output of the amplifier.) The differential equation for the armature circuit is

$$L_a \frac{di_a}{dt} + R_a i_a + e_b = e_a$$

or

$$L_a \frac{di_a}{dt} + R_a i_a + K_3 \frac{d\theta}{dt} = K_1 e_v \tag{3–115}$$

The equation for torque equilibrium is

$$J_0 \frac{d^2\theta}{dt^2} + b_0 \frac{d\theta}{dt} = T = K_2 i_a \tag{3–116}$$

where J_0 is the inertia of the combination of the motor, load, and gear train referred to the motor shaft and b_0 is the viscous-friction coefficient of the combination of the motor, load, and gear train referred to the motor shaft.

By eliminating i_a from Equations (3–115) and (3–116), we obtain

$$\frac{\Theta(s)}{E_v(s)} = \frac{K_1 K_2}{s(L_a s + R_a)(J_0 s + b_0) + K_2 K_3 s} \tag{3–117}$$

We assume that the gear ratio of the gear train is such that the output shaft rotates n times for each revolution of the motor shaft. Thus,

$$C(s) = n\Theta(s) \tag{3–118}$$

The relationship among $E_v(s)$, $R(s)$, and $C(s)$ is

$$E_v(s) = K_0[R(s) - C(s)] = K_0 E(s) \tag{3–119}$$

The block diagram of this system can be constructed from Equations (3–117), (3–118), and (3–119), as shown in Figure 3-65(b). The transfer function in the feedforward path of this system is

$$G(s) = \frac{C(s)}{\Theta(s)} \frac{\Theta(s)}{E_v(s)} \frac{E_v(s)}{E(s)} = \frac{K_0 K_1 K_2 n}{s[(L_a s + R_a)(J_0 s + b_0) + K_2 K_3]}$$

PETITIONER'S EXHIBIT 1002
US PATENT NO. 6,581,565
Page 9939

When L_a is small, it can be neglected, and the transfer function $G(s)$ in the feedforward path becomes

$$G(s) = \frac{K_0K_1K_2n}{s[R_a(J_0s + b_0) + K_2K_3]}$$

$$= \frac{K_0K_1K_2n/R_a}{J_0s^2 + \left(b_0 + \dfrac{K_2K_3}{R_a}\right)s} \tag{3-120}$$

The term $[b_0 + (K_2K_3/R_a)]s$ indicates that the back emf of the motor effectively increases the viscous friction of the system. The inertia J_0 and viscous friction coefficient $b_0 + (K_2K_3/R_a)$ are referred to the motor shaft. When J_0 and $b_0 + (K_2K_3/R_a)$ are multiplied by $1/n^2$, the inertia and viscous-friction coefficient are expressed in terms of the output shaft. Introducing new parameters defined by

$J = J_0/n^2$ = moment of inertia referred to the output shaft

$B = [b_0 + (K_2K_3/R_a)]/n^2$ = viscous-friction coefficient referred to the output shaft

$K = K_0K_1K_2/nR_a$

the transfer function $G(s)$ given by Equation (3–120) can be simplified, yielding

$$G(s) = \frac{K}{Js^2 + Bs}$$

or

$$G(s) = \frac{K_m}{s(T_ms + 1)}$$

where

$$K_m = \frac{K}{B}, \qquad T_m = \frac{J}{B} = \frac{R_aJ_0}{R_ab_0 + K_2K_3}$$

The block diagram of the system shown in Figure 3–65(b) can thus be simplified as shown in Figure 3–65(c).

A–3–24. Consider the system shown in Figure 3–66. Obtain the closed-loop transfer function $C(s)/R(s)$.

Solution. In this system there is only one forward path that connects the input $R(s)$ and the Output $C(s)$. Thus,

$$P_1 = \frac{1}{C_1s}\frac{1}{R_1}\frac{1}{C_2s}$$

PETITIONER'S EXHIBIT 1002
US PATENT NO. 6,581,565
Page 9940

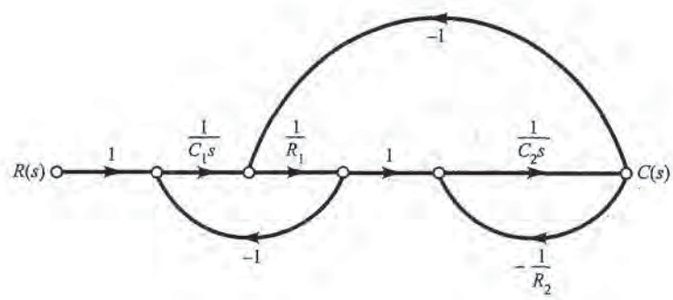

Figure 3–66
Signal flow graph of a control system.

There are three individual loops. Thus,

$$L_1 = -\frac{1}{C_1 s}\frac{1}{R_1}$$

$$L_2 = -\frac{1}{C_2 s}\frac{1}{R_2}$$

$$L_3 = -\frac{1}{R_1}\frac{1}{C_2 s}$$

Loop L_1 does not touch loop L_2. (Loop L_1 touches loop L_3, and loop L_2 touches loop L_3.) Hence the determinant Δ is given by

$$\begin{aligned}\Delta &= 1 - (L_1 + L_2 + L_3) + (L_1 L_2)\\ &= 1 + \frac{1}{R_1 C_1 s} + \frac{1}{R_2 C_2 s} + \frac{1}{R_1 C_2 s} + \frac{1}{R_1 C_1 R_2 C_2 s^2}\end{aligned}$$

Since all three loops touch the forward path P_1, we remove L_1, L_2, L_3, and $L_1 L_2$ from Δ and evaluate the cofactor Δ_1 as follows:

$$\Delta_1 = 1$$

Thus we obtain the closed-loop transfer function to be

$$\begin{aligned}\frac{C(s)}{R(s)} &= \frac{P_1 \Delta_1}{\Delta}\\ &= \frac{\dfrac{1}{R_1 C_1 C_2 s^2}}{1 + \dfrac{1}{R_1 C_1 s} + \dfrac{1}{R_2 C_2 s} + \dfrac{1}{R_1 C_2 s} + \dfrac{1}{R_1 C_1 R_2 C_2 s^2}}\\ &= \frac{R_2}{R_1 C_1 R_2 C_2 s^2 + (R_1 C_1 + R_2 C_2 + R_2 C_1)s + 1}\end{aligned}$$

PETITIONER'S EXHIBIT 1002
US PATENT NO. 6,581,565
Page 9941

A–3–25. Obtain the transfer function $Y(s)/X(s)$ of the system shown in Figure 3–67.

Solution. The signal flow graph shown in Figure 3–67 can be successively simplified as shown in Figures 3–68 (a), (b), and (c). From Figure 3–68(c), X_3 can be written as

$$X_3 = \frac{1}{s^2}X - \frac{a_1 s + a_2}{s^2}X_3$$

This last equation can be simplified as

$$(s^2 + a_1 s + a_2)X_3 = X$$

from which we obtain

$$\frac{Y(s)}{X(s)} = \frac{bX_3}{X} = \frac{b}{s^2 + a_1 s + a_2}$$

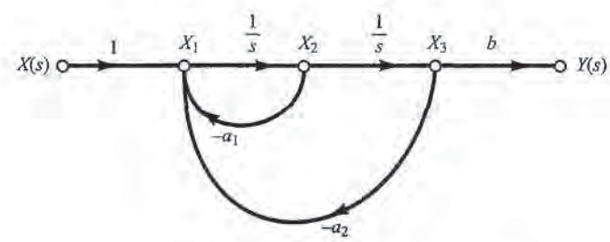

Figure 3–67
Signal flow graph of a system.

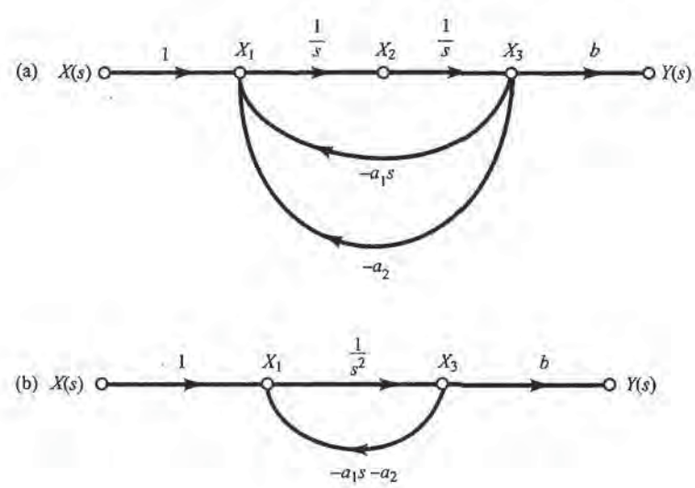

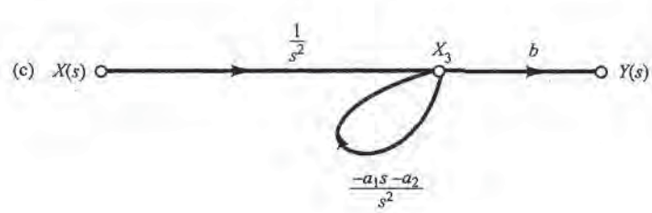

Figure 3–68
Succesive simplifications of the signal flow graph of Figure 3–67.

PETITIONER'S EXHIBIT 1002
US PATENT NO. 6,581,565
Page 9942

A–3–26. Figure 3–69 is the block diagram of an engine-speed control system. The speed is measured by a set of flyweights. Draw a signal flow graph for this system.

Solution. Referring to Figure 3–36(e), a signal flow graph for

$$\frac{Y(s)}{X(s)} = \frac{1}{s + 140}$$

may be drawn as shown in Figure 3–70(a). Similarly, a signal flow graph for

$$\frac{Z(s)}{X(s)} = \frac{1}{s^2 + 140s + 100^2} = \frac{\dfrac{1}{s + 140}\dfrac{1}{s}}{1 + \dfrac{100^2}{s + 140}\dfrac{1}{s}}$$

may be drawn as shown in Figure 3–70(b).

Drawing a signal flow graph for each of the system components and combining them together, a signal flow graph for the complete system may be obtained as shown in Figure 3–70(c).

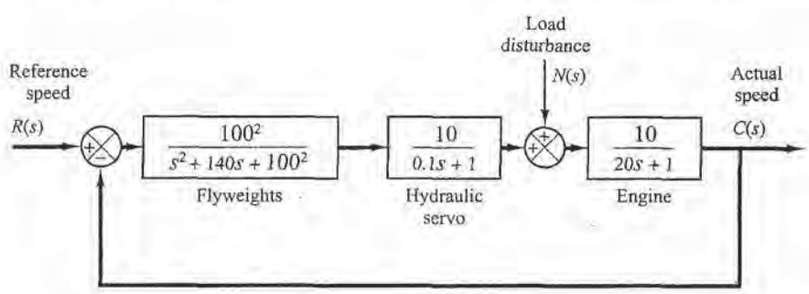

Figure 3–69
Block diagram of an engine-speed control system.

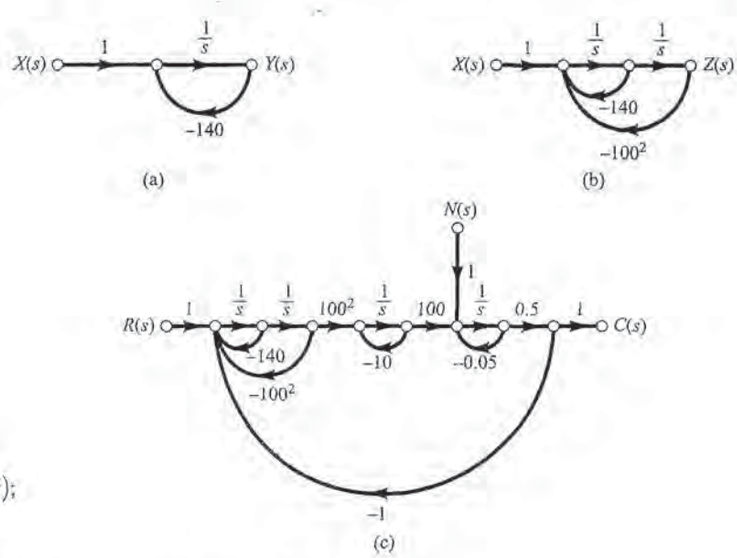

Figure 3–70
(a) Signal flow graph for $Y(s)/X(s) = 1/(s + 140)$;
(b) signal flow graph for $Z(s)/X(s) = 1/(s^2 + 140s + 100^2)$;
(c) signal flow graph for the system shown in Fig. 3–69.

PETITIONER'S EXHIBIT 1002
US PATENT NO. 6,581,565
Page 9943

A–3–27. Linearize the nonlinear equation

$$z = x^2 + 4xy + 6y^2$$

in the region defined by $8 \le x \le 10, 2 \le y \le 4$.

Solution. Define

$$f(x, y) = z = x^2 + 4xy + 6y^2$$

Then

$$z = f(x, y) = f(\bar{x}, \bar{y}) + \left[\frac{\partial f}{\partial x}(x - \bar{x}) + \frac{\partial f}{\partial y}(y - \bar{y})\right]_{x=\bar{x}, y=\bar{y}} + \cdots$$

where $\bar{x} = 9$, $\bar{y} = 3$.

Since the higher-order terms in the expanded equation are small, neglecting these higher-order terms, we obtain

$$z - \bar{z} = K_1(x - \bar{x}) + K_2(y - \bar{y})$$

where

$$K_1 = \left.\frac{\partial f}{\partial x}\right|_{x=\bar{x}, y=\bar{y}} = 2\bar{x} + 4\bar{y} = 2 \times 9 + 4 \times 3 = 30$$

$$K_2 = \left.\frac{\partial f}{\partial y}\right|_{x=\bar{x}, y=\bar{y}} = 4\bar{x} + 12\bar{y} = 4 \times 9 + 12 \times 3 = 72$$

$$\bar{z} = \bar{x}^2 + 4\bar{x}\bar{y} + 6\bar{y}^2 = 9^2 + 4 \times 9 \times 3 + 6 \times 9 = 243$$

Thus

$$z - 243 = 30(x - 9) + 72(y - 3)$$

Hence a linear approximation of the given nonlinear equation near the operating point is

$$z - 30x - 72y + 243 = 0$$

PETITIONER'S EXHIBIT 1002
US PATENT NO. 6,581,565
Page 9944

PROBLEMS

B–3–1. Simplify the block diagram shown in Figure 3–71 and obtain the closed-loop transfer function $C(s)/R(s)$.

B–3–2. Simplify the block diagram shown in Figure 3–72 and obtain the transfer function $C(s)/R(s)$.

B–3–3. Simplify the block diagram shown in Figure 3–73 and obtain the closed-loop transfer function $C(s)/R(s)$.

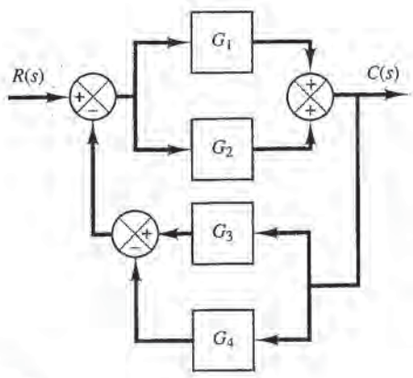

Figure 3–71
Block diagram of a system.

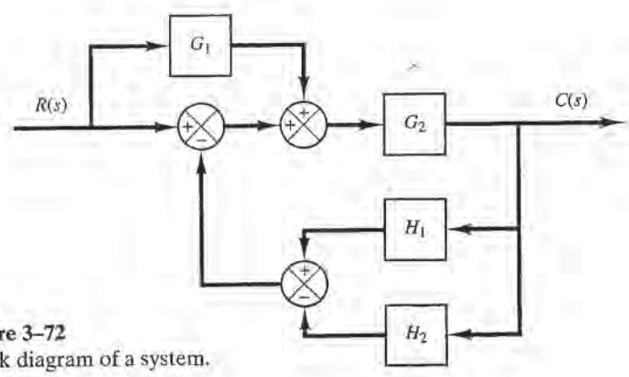

Figure 3–72
Block diagram of a system.

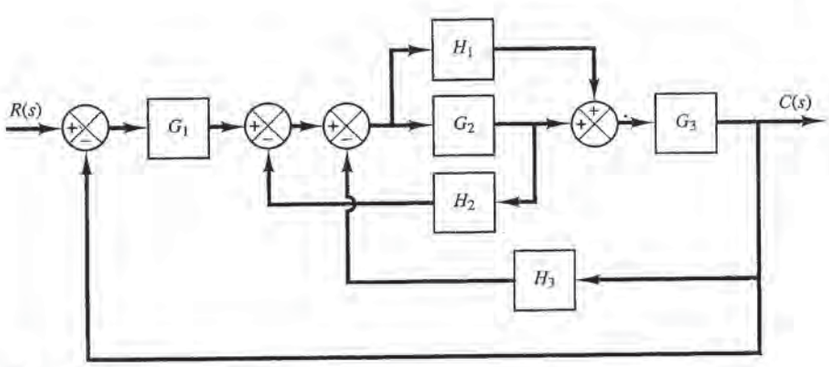

Figure 3–73
Block diagram of a system.

PETITIONER'S EXHIBIT 1002
US PATENT NO. 6,581,565
Page 9945

B–3–4. Consider industrial automatic controllers whose control actions are proportional, integral, proportional-plus-integral, proportional-plus-derivative, and proportional-plus-integral-plus-derivative. The transfer functions of these controllers can be given, respectively, by

$$\frac{U(s)}{E(s)} = K_p$$

$$\frac{U(s)}{E(s)} = \frac{K_i}{s}$$

$$\frac{U(s)}{E(s)} = K_p\left(1 + \frac{1}{T_i s}\right)$$

$$\frac{U(s)}{E(s)} = K_p(1 + T_d s)$$

$$\frac{U(s)}{E(s)} = K_p\left(1 + \frac{1}{T_i s} + T_d s\right)$$

where $U(s)$ is the Laplace transform of $u(t)$, the controller output, and $E(s)$ the Laplace transform of $e(t)$, the actuating error signal. Sketch $u(t)$ versus t curves for each of the five types of controllers when the actuating error signal is

(a) $e(t)$ = unit-step function

(b) $e(t)$ = unit-ramp function

In sketching curves, assume that the numerical values of K_p, K_i, T_i, and T_d are given as

K_p = proportional gain = 4

K_i = integral gain = 2

T_i = integral time = 2 sec

T_d = derivative time = 0.8 sec

B–3–5. Figure 3–74 shows a closed-loop system with a reference input and disturbance input. Obtain the expression for the output $C(s)$ when both the reference input and disturbance input are present.

B–3–6. Consider the system shown in Figure 3–75. Derive the expression for the steady-state error when both the reference input $R(s)$ and disturbance input $D(s)$ are present.

B–3–7. Obtain the transfer functions $C(s)/R(s)$ and $C(s)/D(s)$ of the system shown in Figure 3–76.

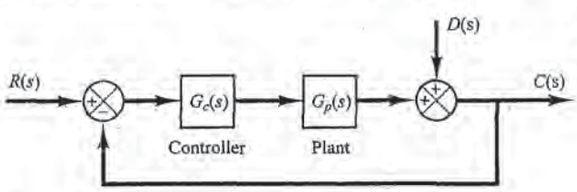

Figure 3–74
Closed-loop system.

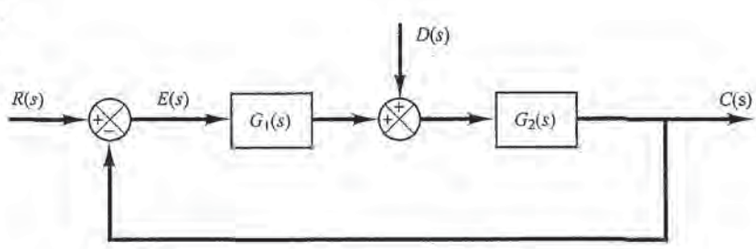

Figure 3–75
Control system.

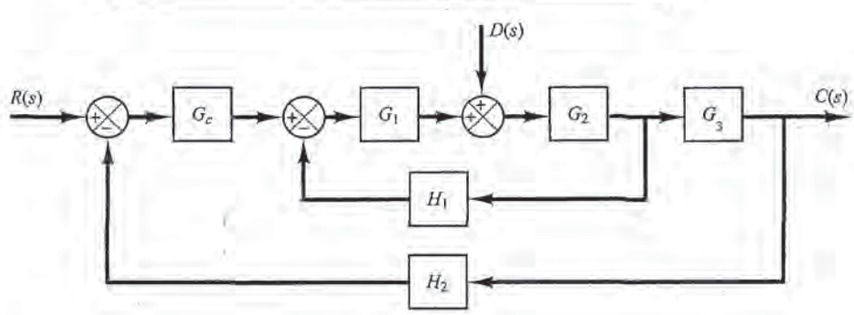

Figure 3–76
Control system.

PETITIONER'S EXHIBIT 1002
US PATENT NO. 6,581,565
Page 9946

B–3–8. Obtain a state-space representation of the system shown in Figure 3–77.

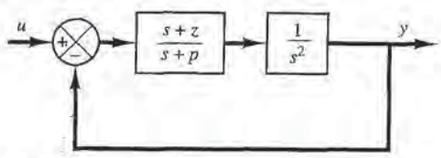

Figure 3–77
Control system.

B–3–9. Consider the system described by

$$\dddot{y} + 3\ddot{y} + 2\dot{y} = u$$

Derive a state-space representation of the system.

B–3–10. Consider the system described by

$$\begin{bmatrix} \dot{x}_1 \\ \dot{x}_2 \end{bmatrix} = \begin{bmatrix} -4 & -1 \\ 3 & -1 \end{bmatrix} \begin{bmatrix} x_1 \\ x_2 \end{bmatrix} + \begin{bmatrix} 1 \\ 1 \end{bmatrix} u$$

$$y = \begin{bmatrix} 1 & 0 \end{bmatrix} \begin{bmatrix} x_1 \\ x_2 \end{bmatrix}$$

Obtain the transfer function of the system.

B–3–11. Consider a system defined by the following state-space equations:

$$\begin{bmatrix} \dot{x}_1 \\ \dot{x}_2 \end{bmatrix} = \begin{bmatrix} -5 & -1 \\ 3 & -1 \end{bmatrix} \begin{bmatrix} x_1 \\ x_2 \end{bmatrix} + \begin{bmatrix} 2 \\ 5 \end{bmatrix} u$$

$$y = \begin{bmatrix} 1 & 2 \end{bmatrix} \begin{bmatrix} x_1 \\ x_2 \end{bmatrix}$$

Obtain the transfer function $G(s)$ of the system.

B–3–12. Obtain the transfer matrix of the system defined by

$$\begin{bmatrix} \dot{x}_1 \\ \dot{x}_2 \\ \dot{x}_3 \end{bmatrix} = \begin{bmatrix} 0 & 1 & 0 \\ 0 & 0 & 1 \\ -2 & -4 & -6 \end{bmatrix} \begin{bmatrix} x_1 \\ x_2 \\ x_3 \end{bmatrix} + \begin{bmatrix} 0 & 0 \\ 0 & 1 \\ 1 & 0 \end{bmatrix} \begin{bmatrix} u_1 \\ u_2 \end{bmatrix}$$

$$\begin{bmatrix} y_1 \\ y_2 \end{bmatrix} = \begin{bmatrix} 1 & 0 & 0 \\ 0 & 1 & 0 \end{bmatrix} \begin{bmatrix} x_1 \\ x_2 \\ x_3 \end{bmatrix}$$

B–3–13. Obtain the equivalent viscous-friction coefficient b_{eq} of the system shown in Figure 3–78.

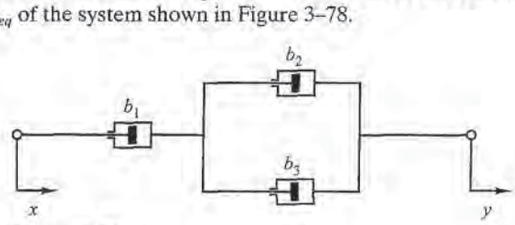

Figure 3–78
Damper system.

B–3–14. Obtain mathematical models of the mechanical systems shown in Figure 3–79(a) and (b).

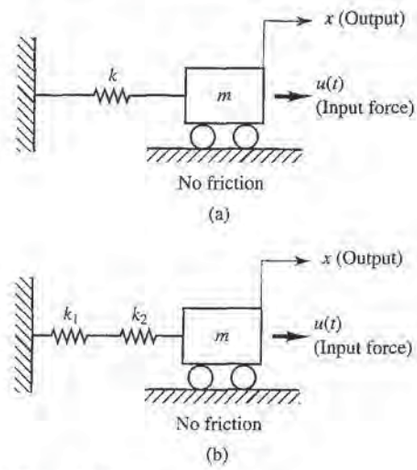

Figure 3–79
Mechanical systems.

B–3–15. Obtain a state-space representation of the mechanical system shown in Figure 3–80, where u_1 and u_2 are the inputs and y_1 and y_2 are the outputs.

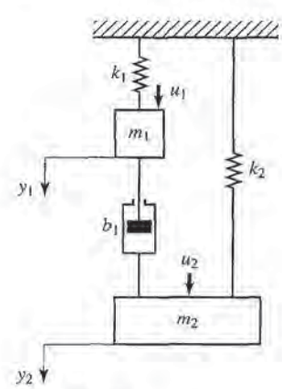

Figure 3–80
Mechanical system.

B–3–16. Consider the spring-loaded pendulum system shown in Figure 3–81. Assume that the spring force acting on the pendulum is zero when the pendulum is vertical, or $\theta = 0$. Assume also that the friction involved is negligible and the angle of oscillation θ is small. Obtain a mathematical model of the system.

PETITIONER'S EXHIBIT 1002
US PATENT NO. 6,581,565
Page 9947

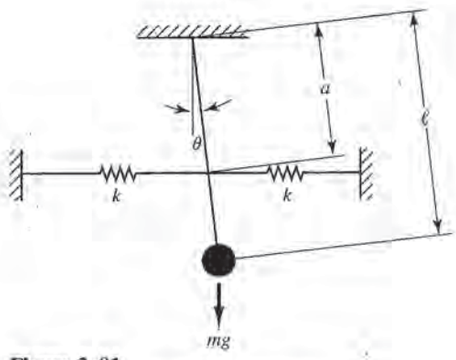

Figure 3–81
Spring-loaded pendulum system.

B–3–17. Referring to Examples 3-8 and 3-9, consider the inverted pendulum system shown in Figure 3–82. Assume that the mass of the inverted pendulum is m and is evenly distributed along the length of the rod. (The center of gravity of the pendulum is located at the center of the rod.) Assuming that θ is small, derive mathematical models for the system in the forms of differential equations, transfer functions, and state-space equations.

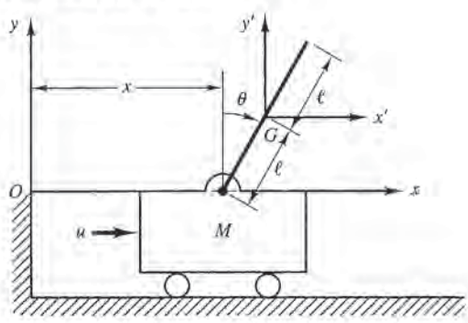

Figure 3–82
Inverted pendulum system.

B–3–18. Obtain the transfer functions $X_1(s)/U(s)$ and $X_2(s)/U(s)$ of the mechanical system shown in Figure 3–83.

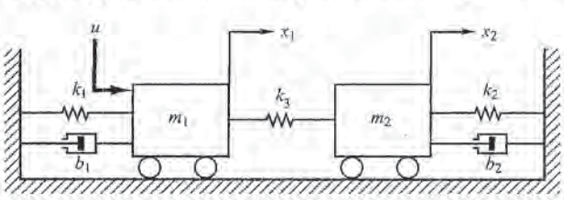

Figure 3–83
Mechanical system.

B–3–19. Obtain the transfer function $E_o(s)/E_i(s)$ of the electrical circuit shown in Figure 3–84.

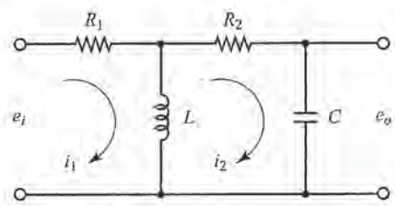

Figure 3–84
Electrical circuit.

B–3–20. Consider the electrical circuit shown in Figure 3–85. Obtain the transfer function $E_o(s)/E_i(s)$ by use of the block diagram approach.

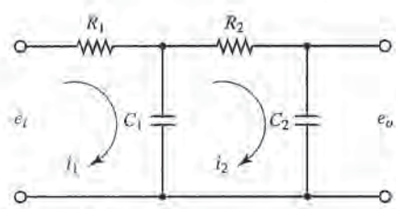

Figure 3–85
Electrical circuit.

B–3–21. Derive the transfer function of the electrical circuit shown in Figure 3–86. Draw a schematic diagram of an analogous mechanical system.

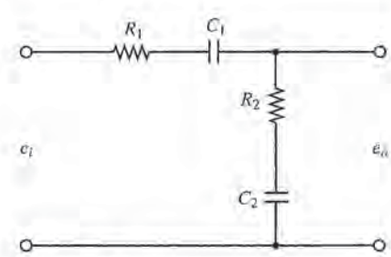

Figure 3–86
Electrical circuit.

PETITIONER'S EXHIBIT 1002
US PATENT NO. 6,581,565
Page 9948

B–3–22. Obtain the transfer function $E_o(s)/E_i(s)$ of the op-amp circuit shown in Figure 3–87.

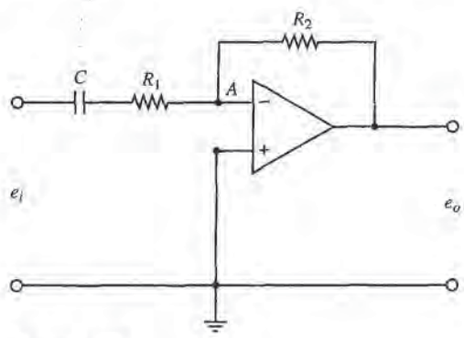

Figure 3–87
Operational-amplifier circuit.

B–3–23. Obtain the transfer function $E_o(s)/E_i(s)$ of the op-amp circuit shown in Figure 3–88.

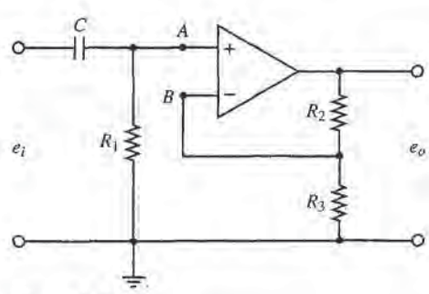

Figure 3–88
Operational-amplifier circuit.

B–3–24. Using the impedance approach, obtain the transfer function $E_o(s)/E_i(s)$ of the op-amp circuit shown in Figure 3–89.

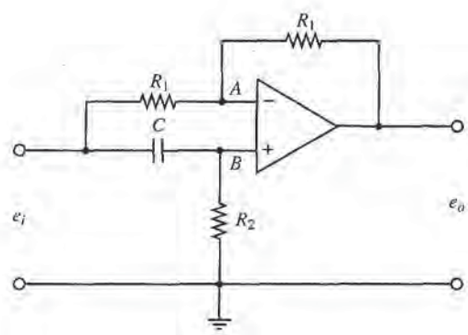

Figure 3–89
Operational-amplifier circuit.

B–3–25. Consider the system shown in Figure 3-90. An armature-controlled dc servomotor drives a load consisting of the moment of inertia J_L. The torque developed by the motor is T. The moment of inertia of the motor rotor is J_m. The angular displacements of the motor rotor and the load element are θ_m and θ, respectively. The gear ratio is $n = \theta/\theta_m$. Obtain the transfer function $\Theta(s)/E_i(s)$.

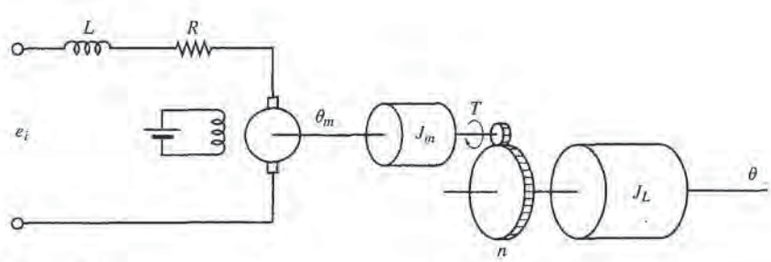

Figure 3–90
Armature-controlled dc servomotor system.

PETITIONER'S EXHIBIT 1002
US PATENT NO. 6,581,565
Page 9949

B–3–26. Obtain the transfer function $Y(s)/X(s)$ of the system shown, in Figure 3–91.

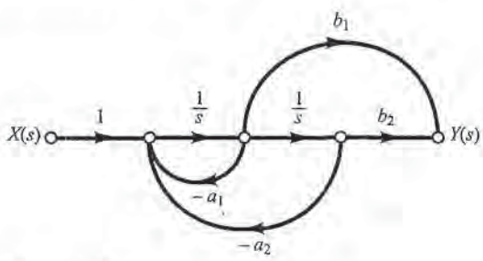

Figure 3–91
Signal flow graph of a system.

B–3–27. Obtain the transfer function $Y(s)/X(s)$ of the system shown in Figure 3–92.

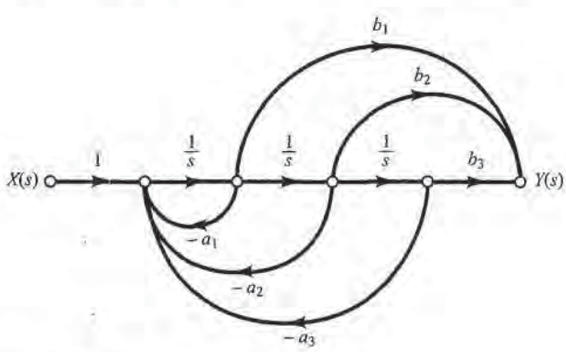

Figure 3–92
Signal flow graph of a system.

B–3–28. Linearize the nonlinear equation

$$z = x^2 + 8xy + 3y^2$$

in the region defined by $2 \le x \le 4, 10 \le y \le 12$.

B–3–29. Find a linearized equation for

$$y = 0.2x^3$$

about a point $x = 2$.

PETITIONER'S EXHIBIT 1002
US PATENT NO. 6,581,565
Page 9950

4

Mathematical Modeling of Fluid Systems and Thermal Systems*

4–1 INTRODUCTION

This chapter treats mathematical modeling of fluid systems and thermal systems. As the most versatile medium for transmitting signals and power, fluids—liquids and gases—have wide usage in industry. Liquids and gases can be distinguished basically by their relative incompressibilities and the fact that a liquid may have a free surface, whereas a gas expands to fill its vessel. In the engineering field the term *pneumatic* describes fluid systems that use air or gases and *hydraulic* applies to those using oil.

We first discuss liquid-level systems that are frequently used in process control. Here we introduce the concepts of resistance and capacitance to describe the dynamics of such systems. Then we treat pneumatic systems. Such systems are extensively used in the automation of production machinery and in the field of automatic controllers. For instance, pneumatic circuits that convert the energy of compressed air into mechanical energy enjoy wide usage. Also, various types of pneumatic controllers are widely used in industry. Next, we present hydraulic servo systems. These are widely used in machine tool systems, aircraft control systems, etc. We discuss basic aspects of hydraulic servo systems and hydraulic controllers. Both pneumatic systems and hydraulic systems can be modeled easily by using the concepts of resistance and capacitance. Finally, we treat simple thermal systems. Such systems involve heat transfer from one substance to another. Mathematical models of such systems can be obtained by using thermal resistance and thermal capacitance.

*This chapter assumes an introductory background of fluid dynamics, thermodynamics, and heat transfer as normally required for mechanical engineering curriculum. If the students using this text do not have such background, this chapter may be skipped without losing continuity of the analysis and design of control systems presented in this book.

PETITIONER'S EXHIBIT 1002
US PATENT NO. 6,581,565
Page 9951

Outline of the Chapter. Section 4–1 has just presented introductory material for the chapter. Section 4–2 discusses liquid-level systems. Section 4–3 treats pneumatic systems—in particular, the basic principles of pneumatic controllers. Section 4–4 first discusses hydraulic servo systems and then presents hydraulic controllers. Finally, Section 4–5 analyzes thermal systems and obtains mathematical models of such systems.

4–2 LIQUID-LEVEL SYSTEMS

In analyzing systems involving fluid flow, we find it necessary to divide flow regimes into laminar flow and turbulent flow, according to the magnitude of the Reynolds number. If the Reynolds number is greater than about 3000 to 4000, then the flow is turbulent. The flow is laminar if the Reynolds number is less than about 2000. In the laminar case, fluid flow occurs in streamlines with no turbulence. Systems involving laminar flow may be represented by linear differential equations.

Industrial processes often involve flow of liquids through connecting pipes and tanks. The flow in such processes is often turbulent and not laminar. Systems involving turbulent flow often have to be represented by nonlinear differential equations. If the region of operation is limited, however, such nonlinear differential equations can be linearized. We shall discuss such linearized mathematical models of liquid-level systems in this section. Note that the introduction of concepts of resistance and capacitance for such liquid-level systems enables us to describe their dynamic characteristics in simple forms.

Resistance and Capacitance of Liquid-Level Systems. Consider the flow through a short pipe connecting two tanks. The resistance R for liquid flow in such a pipe or restriction is defined as the change in the level difference (the difference of the liquid levels of the two tanks) necessary to cause a unit change in flow rate; that is,

$$R = \frac{\text{change in level difference, m}}{\text{change in flow rate, m}^3/\text{sec}}$$

Since the relationship between the flow rate and level difference differs for the laminar flow and turbulent flow, we shall consider both cases in the following.

Consider the liquid-level system shown in Figure 4–1(a). In this system the liquid spouts through the load valve in the side of the tank. If the flow through this restriction is laminar, the relationship between the steady-state flow rate and steady-state head at the level of the restriction is given by

$$Q = KH$$

where Q = steady-state liquid flow rate, m^3/sec
K = coefficient, m^2/sec
H = steady-state head, m

For laminar flow, the resistance R_l is obtained as

$$R_l = \frac{dH}{dQ} = \frac{H}{Q}$$

The laminar-flow resistance is constant and is analogous to the electrical resistance.

If the flow through the restriction is turbulent, the steady-state flow rate is given by

$$Q = K\sqrt{H} \tag{4–1}$$

PETITIONER'S EXHIBIT 1002
US PATENT NO. 6,581,565
Page 9952

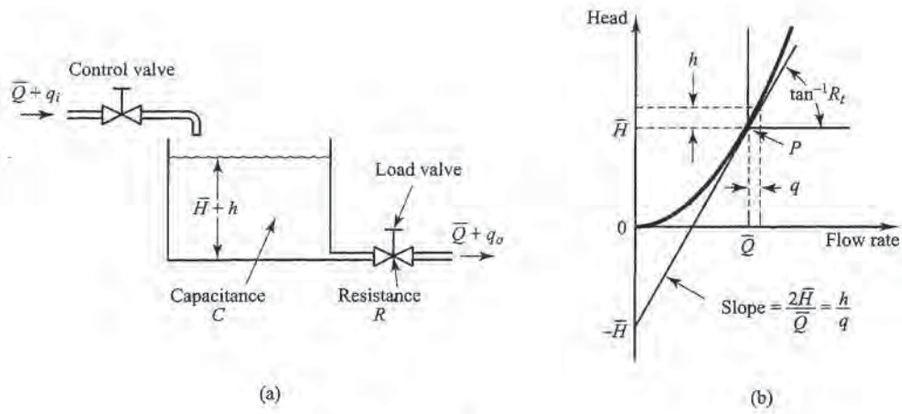

Figure 4–1
(a) Liquid-level system; (b) head versus flow rate curve.

where Q = steady-state liquid flow rate, m^3/sec
K = coefficient, $m^{2.5}/sec$
H = steady-state head, m

The resistance R_t for turbulent flow is obtained from

$$R_t = \frac{dH}{dQ}$$

Since from Equation (4–1) we obtain

$$dQ = \frac{K}{2\sqrt{H}}\,dH$$

we have

$$\frac{dH}{dQ} = \frac{2\sqrt{H}}{K} = \frac{2\sqrt{H}\,\sqrt{H}}{Q} = \frac{2H}{Q}$$

Thus,

$$R_t = \frac{2H}{Q}$$

The value of the turbulent-flow resistance R_t depends on the flow rate and the head. The value of R_t, however, may be considered constant if the changes in head and flow rate are small.

By use of the turbulent-flow resistance, the relationship between Q and H can be given by

$$Q = \frac{2H}{R_t}$$

Such linearization is valid, provided that changes in the head and flow rate from their respective steady-state values are small.

In many practical cases, the value of the coefficient K in Equation (4–1), which depends on the flow coefficient and the area of restriction, is not known. Then the resistance may be determined by plotting the head versus flow rate curve based on experimental data and measuring the slope of the curve at the operating condition. An example of such a plot

PETITIONER'S EXHIBIT 1002
US PATENT NO. 6,581,565
Page 9953

is shown in Figure 4–1(b). In the figure, point P is the steady-state operating point. The tangent line to the curve at point P intersects the ordinate at point $(0, -\bar{H})$. Thus, the slope of this tangent line is $2\bar{H}/\bar{Q}$. Since the resistance R_t at the operating point P is given by $2\bar{H}/\bar{Q}$, the resistance R_t is the slope of the curve at the operating point.

Consider the operating condition in the neighborhood of point P. Define a small deviation of the head from the steady-state value as h and the corresponding small change of the flow rate as q. Then the slope of the curve at point P can be given by

$$\text{Slope of curve at point } P = \frac{h}{q} = \frac{2\bar{H}}{\bar{Q}} = R_t$$

The linear approximation is based on the fact that the actual curve does not differ much from its tangent line if the operating condition does not vary too much.

The capacitance C of a tank is defined to be the change in quantity of stored liquid necessary to cause a unit change in the potential (head). (The potential is the quantity that indicates the energy level of the system.)

$$C = \frac{\text{change in liquid stored, m}^3}{\text{change in head, m}}$$

It should be noted that the capacity (m^3) and the capacitance (m^2) are different. The capacitance of the tank is equal to its cross-sectional area. If this is constant, the capacitance is constant for any head.

Liquid-Level Systems. Consider the system shown in Figure 4–1(a). The variables are defined as follows:

$\bar{Q}$ = steady-state flow rate (before any change has occurred), m^3/sec
q_i = small deviation of inflow rate from its steady-state value, m^3/sec
q_o = small deviation of outflow rate from its steady-state value, m^3/sec
$\bar{H}$ = steady-state head (before any change has occurred), m
h = small deviation of head from its steady-state value, m

As stated previously, a system can be considered linear if the flow is laminar. Even if the flow is turbulent, the system can be linearized if changes in the variables are kept small. Based on the assumption that the system is either linear or linearized, the differential equation of this system can be obtained as follows: Since the inflow minus outflow during the small time interval dt is equal to the additional amount stored in the tank, we see that

$$C\,dh = (q_i - q_o)\,dt$$

From the definition of resistance, the relationship between q_o and h is given by

$$q_o = \frac{h}{R}$$

The differential equation for this system for a constant value of R becomes

$$RC\frac{dh}{dt} + h = Rq_i \tag{4–2}$$

Note that RC is the time constant of the system. Taking the Laplace transforms of both sides of Equation (4–2), assuming the zero initial condition, we obtain

$$(RCs + 1)H(s) = RQ_i(s)$$

PETITIONER'S EXHIBIT 1002
US PATENT NO. 6,581,565
Page 9954

where

$$H(s) = \mathscr{L}[h] \qquad \text{and} \qquad Q_i(s) = \mathscr{L}[q_i]$$

If q_i is considered the input and h the output, the transfer function of the system is

$$\frac{H(s)}{Q_i(s)} = \frac{R}{RCs + 1}$$

If, however, q_o is taken as the output, the input being the same, then the transfer function is

$$\frac{Q_o(s)}{Q_i(s)} = \frac{1}{RCs + 1}$$

where we have used the relationship

$$Q_o(s) = \frac{1}{R} H(s)$$

Liquid-Level Systems with Interaction. Consider the system shown in Figure 4–2. In this system, the two tanks interact. Thus the transfer function of the system is not the product of two first-order transfer functions.

In the following, we shall assume only small variations of the variables from the steady-state values. Using the symbols as defined in Figure 4–2 , we can obtain the following equations for this system:

$$\frac{h_1 - h_2}{R_1} = q_1 \tag{4–3}$$

$$C_1 \frac{dh_1}{dt} = q - q_1 \tag{4–4}$$

$$\frac{h_2}{R_2} = q_2 \tag{4–5}$$

$$C_2 \frac{dh_2}{dt} = q_1 - q_2 \tag{4–6}$$

If q is considered the input and q_2 the output, the transfer function of the system is

$$\frac{Q_2(s)}{Q(s)} = \frac{1}{R_1C_1R_2C_2s^2 + (R_1C_1 + R_2C_2 + R_2C_1)s + 1} \tag{4–7}$$

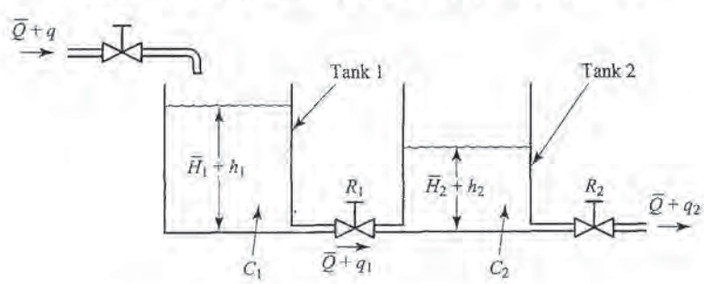

Figure 4–2
Liquid-level system with interaction.

$\bar{Q}$: Steady-state flow rate
$\bar{H}_1$: Steady-state liquid level of tank 1
$\bar{H}_2$: Steady-state liquid level of tank 2

PETITIONER'S EXHIBIT 1002
US PATENT NO. 6,581,565
Page 9955

It is instructive to obtain Equation (4–7), the transfer function of the interacted system, by block diagram reduction. From Equations (4–3) through (4–6), we obtain the elements of the block diagram, as shown in Figure 4–3(a). By connecting signals properly, we can construct a block diagram, as shown in Figure 4–3(b). This block diagram can be simplified, as shown in Figure 4–3(c). Further simplifications result in Figures 4–3(d) and (e). Figure 4–3(e) is equivalent to Equation (4–7).

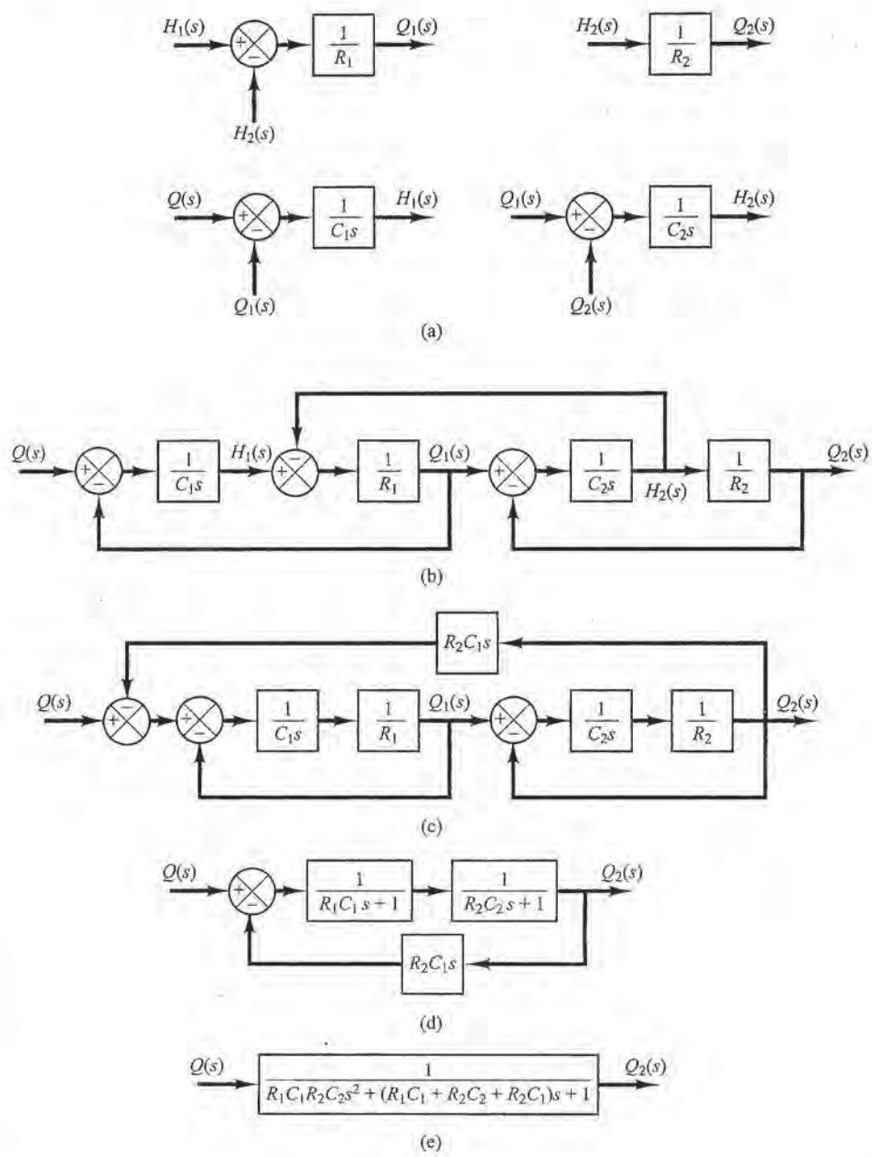

Figure 4–3
(a) Elements of the block diagram of the system shown in Figure 4–2; (b) block diagram of the system; (c)-(e) successive reductions of the block diagram.

PETITIONER'S EXHIBIT 1002
US PATENT NO. 6,581,565
Page 9956

Notice the similarity and difference between the transfer function given by Equation (4–7) and that given by Equation(3–72). The term R_2C_1s that appears in the denominator of Equation (4–7) exemplifies the interaction between the two tanks. Similarly, the term R_1C_2s in the denominator of Equation (3–72) represents the interaction between the two RC circuits shown in Figure 3–23.

4–3 PNEUMATIC SYSTEMS

In industrial applications pneumatic systems and hydraulic systems are frequently compared. Therefore, before we discuss pneumatic systems in detail, we shall give a brief comparison of these two kinds of systems.

Comparison Between Pneumatic Systems and Hydraulic Systems. The fluid generally found in pneumatic systems is air; in hydraulic systems it is oil. And it is primarily the different properties of the fluids involved that characterize the differences between the two systems. These differences can be listed as follows:

1. Air and gases are compressible, whereas oil is incompressible, (except at high pressure).
2. Air lacks lubricating property and always contains water vapor. Oil functions as a hydraulic fluid as well as a lubricator.
3. The normal operating pressure of pneumatic systems is very much lower than that of hydraulic systems.
4. Output powers of pneumatic systems are considerably less than those of hydraulic systems.
5. Accuracy of pneumatic actuators is poor at low velocities, whereas accuracy of hydraulic actuators may be made satisfactory at all velocities.
6. In pneumatic systems, external leakage is permissible to a certain extent, but internal leakage must be avoided because the effective pressure difference is rather small. In hydraulic systems internal leakage is permissible to a certain extent, but external leakage must be avoided.
7. No return pipes are required in pneumatic systems when air is used, whereas they are always needed in hydraulic systems.
8. Normal operating temperature for pneumatic systems is 5° to 60°C (41° to 140°F). The pneumatic system, however, can be operated in the 0° to 200°C (32° to 392°F) range. Pneumatic systems are insensitive to temperature changes, in contrast to hydraulic systems, in which fluid friction due to viscosity depends greatly on temperature. Normal operating temperature for hydraulic systems is 20° to 70°C (68° to 158°F).
9. Pneumatic systems are fire- and explosion-proof, whereas hydraulic systems are not, unless nonflammable liquid is used.

In what follows we begin with a mathematical modeling of pneumatic systems. Then we shall present pneumatic proportional controllers.

We shall first give detailed discussions of the principle by which proportional controllers operate. Then we shall treat methods for obtaining derivative and integral control actions. Throughout the discussions, we shall place emphasis on the

PETITIONER'S EXHIBIT 1002
US PATENT NO. 6,581,565
Page 9957

fundamental principles, rather than on the details of the operation of the actual mechanisms.

Pneumatic Systems. The past decades have seen a great development in low-pressure pneumatic controllers for industrial control systems, and today they are used extensively in industrial processes. Reasons for their broad appeal include an explosion-proof character, simplicity, and ease of maintenance.

Resistance and Capacitance of Pressure Systems. Many industrial processes and pneumatic controllers involve the flow of a gas or air through connected pipelines and pressure vessels.

Consider the pressure system shown in Figure 4–4(a). The gas flow through the restriction is a function of the gas pressure difference $p_i - p_o$. Such a pressure system may be characterized in terms of a resistance and a capacitance.

The gas flow resistance R may be defined as follows:

$$R = \frac{\text{change in gas pressure difference, lb}_f/\text{ft}^2}{\text{change in gas flow rate, lb/sec}}$$

or

$$R = \frac{d(\Delta P)}{dq} \tag{4–8}$$

where $d(\Delta P)$ is a small change in the gas pressure difference and dq is a small change in the gas flow rate. Computation of the value of the gas flow resistance R may be quite time consuming. Experimentally, however, it can be easily determined from a plot of the pressure difference versus flow rate by calculating the slope of the curve at a given operating condition, as shown in Figure 4–4(b).

The capacitance of the pressure vessel may be defined by

$$C = \frac{\text{change in gas stored, lb}}{\text{change in gas pressure, lb}_f/\text{ft}^2}$$

or

$$C = \frac{dm}{dp} = V\frac{d\rho}{dp} \tag{4–9}$$

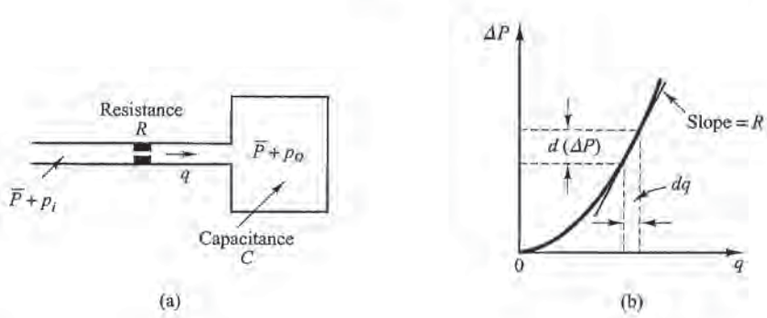

Figure 4–4 (a) Schematic diagram of a pressure system; (b) pressure difference versus flow rate curve.

PETITIONER'S EXHIBIT 1002
US PATENT NO. 6,581,565
Page 9958

where C = capacitance, lb-ft^2/lb$_f$
m = mass of gas in vessel, lb
p = gas pressure, lb$_f$/ft^2
V = volume of vessel, ft^3
ρ = density, lb/ft^3

The capacitance of the pressure system depends on the type of expansion process involved. The capacitance can be calculated by use of the ideal gas law. If the gas expansion process is polytropic and the change of state of the gas is between isothermal and adiabatic, then

$$p\left(\frac{V}{m}\right)^n = \frac{p}{\rho^n} = \text{constant} = K \tag{4–10}$$

where n = polytropic exponent.

For ideal gases,

$$p\bar{v} = \bar{R}T \qquad \text{or} \qquad pv = \frac{\bar{R}}{M}T$$

where p = absolute pressure, lb$_f$/ft^2
$\bar{v}$ = volume occupied by 1 mole of a gas, ft^3/lb-mole
$\bar{R}$ = universal gas constant, ft-lb$_f$/lb-mole °R
T = absolute temperature, °R
v = specific volume of gas, ft^3/lb
M = molecular weight of gas per mole, lb/lb-mole

Thus

$$pv = \frac{p}{\rho} = \frac{\bar{R}}{M}T = R_{\text{gas}}T \tag{4–11}$$

where R_{gas} = gas constant, ft-lb$_f$/lb °R.

The polytropic exponent n is unity for isothermal expansion. For adiabatic expansion, n is equal to the ratio of specific heats c_p/c_v, where c_p is the specific heat at constant pressure and c_v is the specific heat at constant volume. In many practical cases, the value of n is approximately constant, and thus the capacitance may be considered constant.

The value of $d\rho/dp$ is obtained from Equations (4–10) and (4–11). From Equation (4–10) we have

$$dp = Kn\rho^{n-1}\,d\rho$$

or

$$\frac{d\rho}{dp} = \frac{1}{Kn\rho^{n-1}} = \frac{\rho^n}{pn\rho^{n-1}} = \frac{\rho}{pn}.$$

Substituting Equation (4–11) into this last equation, we get

$$\frac{d\rho}{dp} = \frac{1}{nR_{\text{gas}}T}$$

PETITIONER'S EXHIBIT 1002
US PATENT NO. 6,581,565
Page 9959

The capacitance C is then obtained as

$$C = \frac{V}{nR_{\text{gas}}T} \tag{4–12}$$

The capacitance of a given vessel is constant if the temperature stays constant. (In many practical cases, the polytropic exponent n is approximately $1.0 \sim 1.2$ for gases in uninsulated metal vessels.)

Pressure Systems. Consider the system shown in Figure 4–4(a). If we assume only small deviations in the variables from their respective steady-state values, then this system may be considered linear.

Let us define

$\bar{P}$ = gas pressure in the vessel at steady state (before changes in pressure have occurred), lb_f/ft^2
p_i = small change in inflow gas pressure, lb_f/ft^2
p_o = small change in gas pressure in the vessel, lb_f/ft^2
V = volume of the vessel, ft^3
m = mass of gas in vessel, lb
q = gas flow rate, lb/sec
ρ = density of gas, lb/ft^3

For small values of p_i and p_o, the resistance R given by Equation (4–8) becomes constant and may be written as

$$R = \frac{p_i - p_o}{q}$$

The capacitance C is given by Equation (4–9), or

$$C = \frac{dm}{dp}$$

Since the pressure change dp_o times the capacitance C is equal to the gas added to the vessel during dt seconds, we obtain

$$C\,dp_o = q\,dt$$

or

$$C\frac{dp_o}{dt} = \frac{p_i - p_o}{R}$$

which can be written as

$$RC\frac{dp_o}{dt} + p_o = p_i$$

If p_i and p_o are considered the input and output, respectively, then the transfer function of the system is

$$\frac{P_o(s)}{P_i(s)} = \frac{1}{RCs + 1}$$

where RC has the dimension of time and is the time constant of the system.

PETITIONER'S EXHIBIT 1002
US PATENT NO. 6,581,565
Page 9960

Pneumatic Nozzle-Flapper Amplifiers. A schematic diagram of a pneumatic nozzle-flapper amplifier is shown in Figure 4–5(a). The power source for this amplifier is a supply of air at constant pressure. The nozzle-flapper amplifier converts small changes in the position of the flapper into large changes in the back pressure in the nozzle. Thus a large power output can be controlled by the very little power that is needed to position the flapper.

In Figure 4–5(a), pressurized air is fed through the orifice, and the air is ejected from the nozzle toward the flapper. Generally, the supply pressure P_s for such a controller is 20 psig (1.4 kg_f/cm^2 gage). The diameter of the orifice is on the order of 0.01 in. (0.25 mm) and that of the nozzle is on the order of 0.016 in. (0.4 mm). To ensure proper functioning of the amplifier, the nozzle diameter must be larger than the orifice diameter.

In operating this system, the flapper is positioned against the nozzle opening. The nozzle back pressure P_b is controlled by the nozzle-flapper distance X. As the flapper approaches the nozzle, the opposition to the flow of air through the nozzle increases, with the result that the nozzle back pressure P_b increases. If the nozzle is completely closed by the flapper, the nozzle back pressure P_b becomes equal to the supply pressure P_s. If the flapper is moved away from the nozzle, so that the nozzle-flapper distance is wide (on the order of 0.01 in.), then there is practically no restriction to flow, and the nozzle back pressure P_b takes on a minimum value that depends on the nozzle-flapper device. (The lowest possible pressure will be the ambient pressure P_a.)

Note that, because the air jet puts a force against the flapper, it is necessary to make the nozzle diameter as small as possible.

A typical curve relating the nozzle back pressure P_b to the nozzle-flapper distance X is shown in Figure 4–5(b). The steep and almost linear part of the curve is utilized in the actual operation of the nozzle-flapper amplifier. Because the range of flapper displacements is restricted to a small value, the change in output pressure is also small, unless the curve is very steep.

The nozzle-flapper amplifier converts displacement into a pressure signal. Since industrial process control systems require large output power to operate large pneumatic actuating valves, the power amplification of the nozzle-flapper amplifier is usually insufficient. Consequently, a pneumatic relay is often needed as a power amplifier in connection with the nozzle-flapper amplifier.

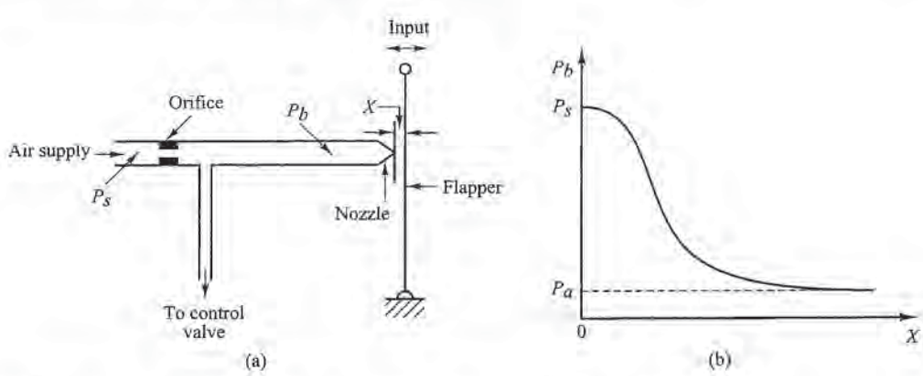

Figure 4–5
(a) Schematic diagram of a pneumatic nozzle-flapper amplifier; (b) characteristic curve relating nozzle back pressure and nozzle-flapper distance.

PETITIONER'S EXHIBIT 1002
US PATENT NO. 6,581,565
Page 9961

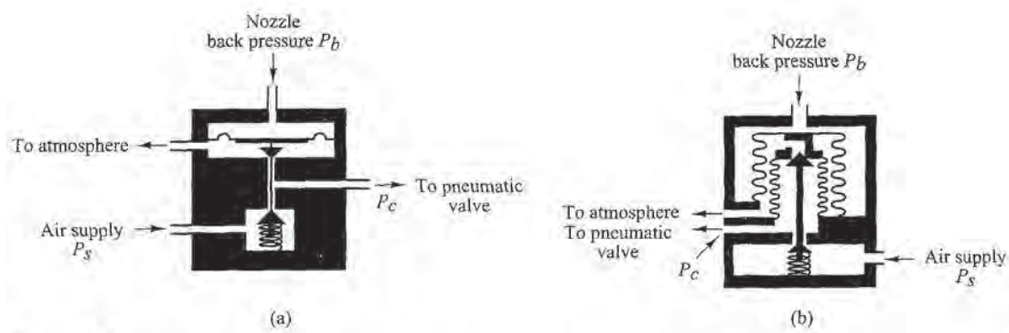

Figure 4–6
(a) Schematic diagram of a bleed-type relay; (b) schematic diagram of a nonbleed-type relay.

Pneumatic Relays. In practice, in a pneumatic controller, a nozzle-flapper amplifier acts as the first-stage amplifier and a pneumatic relay as the second-stage amplifier. The pneumatic relay is capable of handling a large quantity of airflow.

A schematic diagram of a pneumatic relay is shown in Figure 4–6(a). As the nozzle back pressure P_b increases, the diaphragm valve moves downward. The opening to the atmosphere decreases and the opening to the pneumatic valve increases, thereby increasing the control pressure P_c. When the diaphragm valve closes the opening to the atmosphere, the control pressure P_c becomes equal to the supply pressure P_s. When the nozzle back pressure P_b decreases and the diaphragm valve moves upward and shuts off the air supply, the control pressure P_c drops to the ambient pressure P_a. The control pressure P_c can thus be made to vary from 0 psig to full supply pressure, usually 20 psig.

The total movement of the diaphragm valve is very small. In all positions of the valve, except at the position to shut off the air supply, air continues to bleed into the atmosphere, even after the equilibrium condition is attained between the nozzle back pressure and the control pressure. Thus the relay shown in Figure 4–6(a) is called a bleed-type relay.

There is another type of relay, the nonbleed type. In this one the air bleed stops when the equilibrium condition is obtained and, therefore, there is no loss of pressurized air at steady-state operation. Note, however, that the nonbleed-type relay must have an atmospheric relief to release the control pressure P_c from the pneumatic actuating valve. A schematic diagram of a nonbleed-type relay is shown in Figure 4–6(b).

In either type of relay, the air supply is controlled by a valve, which is in turn controlled by the nozzle back pressure. Thus, the nozzle back pressure is converted into the control pressure with power amplification.

Since the control pressure P_c changes almost instantaneously with changes in the nozzle back pressure P_b, the time constant of the pneumatic relay is negligible compared with the other larger time constants of the pneumatic controller and the plant.

It is noted that some pneumatic relays are reverse acting. For example, the relay shown in Figure 4–7 is a reverse-acting relay. Here, as the nozzle back pressure P_b increases, the ball valve is forced toward the lower seat, thereby decreasing the control pressure P_c. Thus, this relay is a reverse-acting relay.

PETITIONER'S EXHIBIT 1002
US PATENT NO. 6,581,565
Page 9962

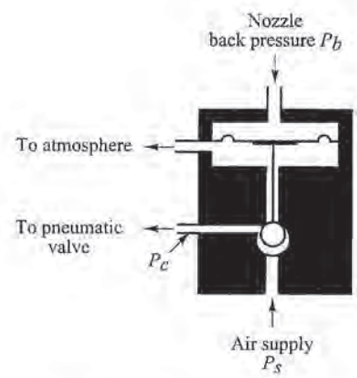

Figure 4–7
Reverse-acting relay.

Pneumatic Proportional Controllers (Force-Distance Type). Two types of pneumatic controllers, one called the force-distance type and the other the force-balance type, are used extensively in industry. Regardless of how differently industrial pneumatic controllers may appear, careful study will show the close similarity in the functions of the pneumatic circuit. Here we shall consider the force-distance type of pneumatic controllers.

Figure 4–8(a) shows a schematic diagram of such a proportional controller. The nozzle-flapper amplifier constitutes the first-stage amplifier, and the nozzle back pressure is controlled by the nozzle-flapper distance. The relay-type amplifier constitutes the second-stage amplifier. The nozzle back pressure determines the position of the diaphragm valve for the second-stage amplifier, which is capable of handling a large quantity of airflow.

In most pneumatic controllers, some type of pneumatic feedback is employed. Feedback of the pneumatic output reduces the amount of actual movement of the flapper. Instead of mounting the flapper on a fixed point, as shown in Figure 4–8(b), it is often pivoted on the feedback bellows, as shown in Figure 4–8(c). The amount of feedback can be regulated by introducing a variable linkage between the feedback bellows and the flapper connecting point. The flapper then becomes a floating link. It can be moved by both the error signal and the feedback signal.

The operation of the controller shown in Figure 4–8(a) is as follows. The input signal to the two-stage pneumatic amplifier is the actuating error signal. Increasing the actuating error signal moves the flapper to the left. This move will, in turn, increase the nozzle back pressure, and the diaphragm valve moves downward. This results in an increase of the control pressure. This increase will cause bellows F to expand and move the flapper to the right, thus opening the nozzle. Because of this feedback, the nozzle-flapper displacement is very small, but the change in the control pressure can be large.

It should be noted that proper operation of the controller requires that the feedback bellows move the flapper less than that movement caused by the error signal alone. (If these two movements were equal, no control action would result.)

Equations for this controller can be derived as follows. When the actuating error is zero, or $e = 0$, an equilibrium state exists with the nozzle-flapper distance equal to $\bar{X}$, the displacement of bellows equal to $\bar{Y}$, the displacement of the diaphragm equal to $\bar{Z}$, the nozzle back pressure equal to $\bar{P}_b$, and the control pressure equal to $\bar{P}_c$. When an

PETITIONER'S EXHIBIT 1002
US PATENT NO. 6,581,565
Page 9963

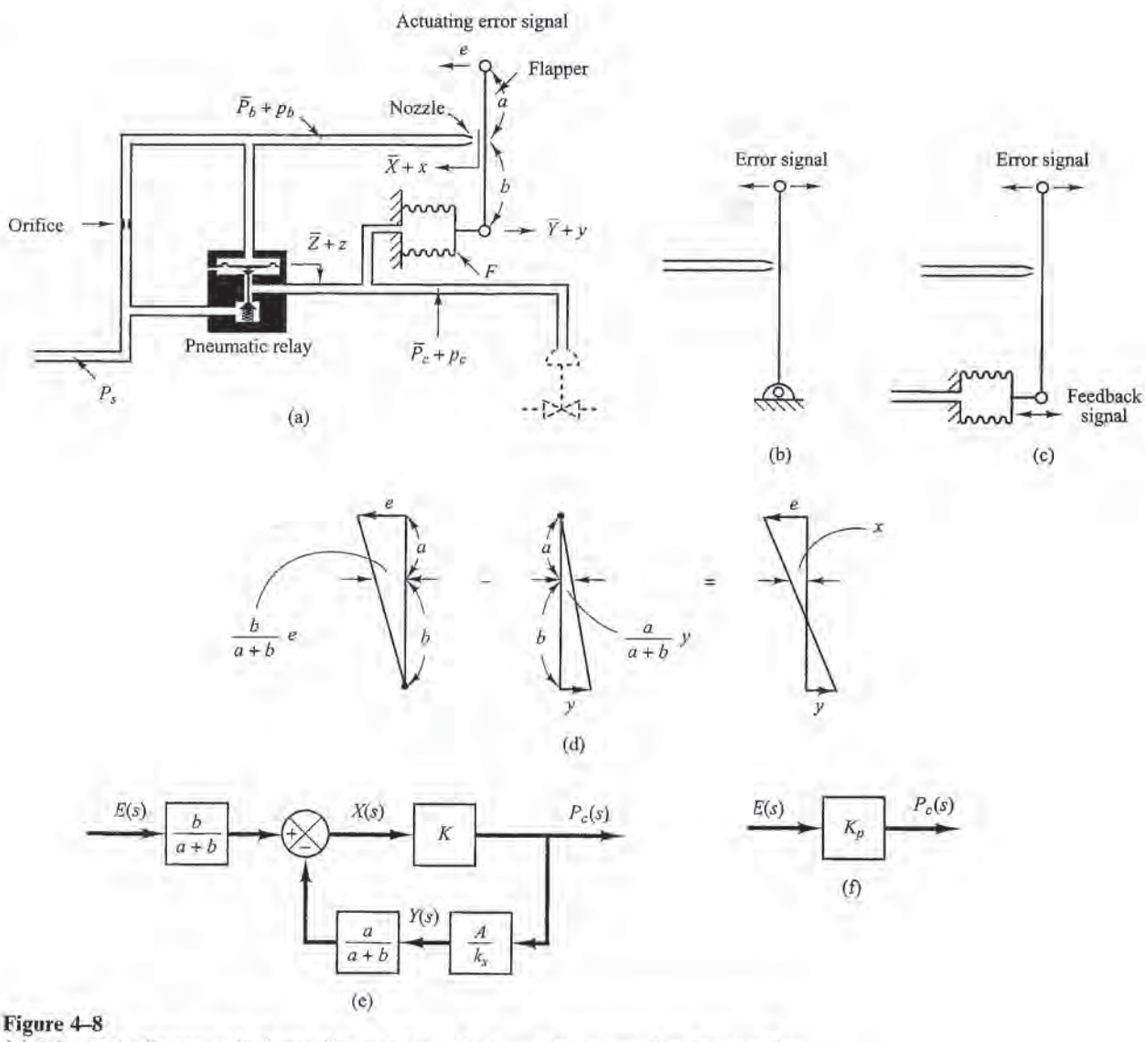

Figure 4–8
(a) Schematic diagram of a force-distance type of pneumatic proportional controller; (b) flapper mounted on a fixed point; (c) flapper mounted on a feedback bellows; (d) displacement x as a result of addition of two small displacements; (e) block diagram for the controller; (f) simplified block diagram for the controller.

actuating error exists, the nozzle-flapper distance, the displacement of the bellows, the displacement of the diaphragm, the nozzle back pressure, and the control pressure deviate from their respective equilibrium values. Let these deviations be x, y, z, p_b, and p_c, respectively. (The positive direction for each displacement variable is indicated by an arrowhead in the diagram.)

PETITIONER'S EXHIBIT 1002
US PATENT NO. 6,581,565
Page 9964

Assuming that the relationship between the variation in the nozzle back pressure and the variation in the nozzle-flapper distance is linear, we have

$$p_b = K_1 x \tag{4–13}$$

where K_1 is a positive constant. For the diaphragm valve,

$$p_b = K_2 z \tag{4–14}$$

where K_2 is a positive constant. The position of the diaphragm valve determines the control pressure. If the diaphragm valve is such that the relationship between p_c and z is linear, then

$$p_c = K_3 z \tag{4–15}$$

where K_3 is a positive constant. From Equations (4–13), (4–14), and (4–15), we obtain

$$p_c = \frac{K_3}{K_2} p_b = \frac{K_1 K_3}{K_2} x = Kx \tag{4–16}$$

where $K = K_1 K_3 / K_2$ is a positive constant. For the flapper, since there are two small movements (e and y) in opposite directions, we can consider such movements separately and add up the results of two movements into one displacement x. See Figure 4–8(d). Thus, for the flapper movement, we have

$$x = \frac{b}{a+b} e - \frac{a}{a+b} y \tag{4–17}$$

The bellows acts like a spring, and the following equation holds true:

$$A p_c = k_s y \tag{4–18}$$

where A is the effective area of the bellows and k_s is the equivalent spring constant, that is, the stiffness due to the action of the corrugated side of the bellows.

Assuming that all variations in the variables are within a linear range, we can obtain a block diagram for this system from Equations (4–16), (4–17), and (4–18) as shown in Figure 4–8(e). From Figure 4–8(e), it can be clearly seen that the pneumatic controller shown in Figure 4–8(a) itself is a feedback system. The transfer function between p_c and e is given by

$$\frac{P_c(s)}{E(s)} = \frac{\dfrac{b}{a+b} K}{1 + K \dfrac{a}{a+b} \dfrac{A}{k_s}} = K_p \tag{4–19}$$

A simplified block diagram is shown in Figure 4–8(f). Since p_c and e are proportional, the pneumatic controller shown in Figure 4–8(a) is a *pneumatic proportional controller*. As seen from Equation (4–19), the gain of the pneumatic proportional controller can be widely varied by adjusting the flapper connecting linkage. [The flapper connecting linkage is not shown in Figure 4–8(a).] In most commercial proportional controllers an adjusting knob or other mechanism is provided for varying the gain by adjusting this linkage.

As noted earlier, the actuating error signal moved the flapper in one direction, and the feedback bellows moved the flapper in the opposite direction, but to a smaller degree.

PETITIONER'S EXHIBIT 1002
US PATENT NO. 6,581,565
Page 9965

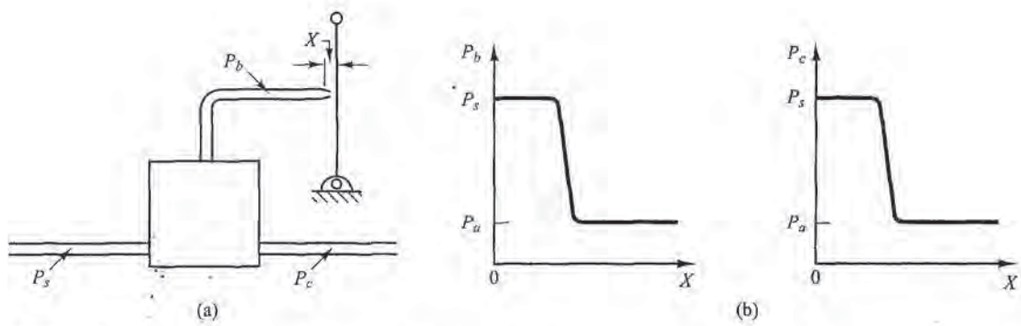

Figure 4–9
(a) Pneumatic controller without a feedback mechanism; (b) curves P_b versus X and P_c versus X.

The effect of the feedback bellows is thus to reduce the sensitivity of the controller. The principle of feedback is commonly used to obtain wide proportional-band controllers.

Pneumatic controllers that do not have feedback mechanisms [which means that one end of the flapper is fixed, as shown in Figure 4–9(a)] have high sensitivity and are called *pneumatic two-position controllers* or *pneumatic on–off controllers*. In such a controller, only a small motion between the nozzle and the flapper is required to give a complete change from the maximum to the minimum control pressure. The curves relating P_b to X and P_c to X are shown in Figure 4–9(b). Notice that a small change in X can cause a large change in P_b, which causes the diaphragm valve to be completely open or completely closed.

Pneumatic Proportional Controllers (Force-Balance Type). Figure 4–10 shows a schematic diagram of a force-balance pneumatic proportional controller. Force-balance controllers are in extensive use in industry. Such controllers are called stack controllers. The basic principle of operation does not differ from that of the force-distance controller. The main advantage of the force-balance controller is that it eliminates many mechanical linkages and pivot joints, thereby reducing the effects of friction.

In what follows, we shall consider the principle of the force-balance controller. In the controller shown in Figure 4–10, the reference input pressure P_r and the output pressure P_o are fed to large diaphragm chambers. Note that a force-balance pneumatic controller operates only on pressure signals. Therefore, it is necessary to convert the reference input and system output to corresponding pressure signals.

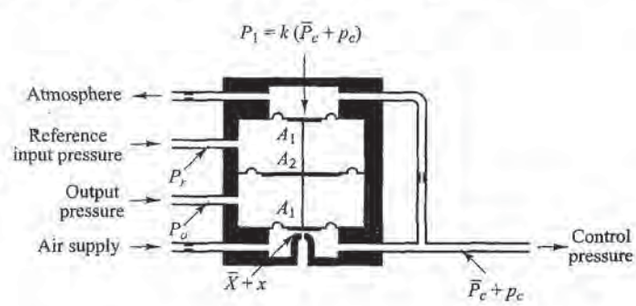

Figure 4–10
Schematic diagram of a force-balance type of pneumatic proportional controller.

PETITIONER'S EXHIBIT 1002
US PATENT NO. 6,581,565
Page 9966

As in the case of the force-distance controller, this controller employs a flapper, nozzle, and orifices. In Figure 4–10, the drilled opening in the bottom chamber is the nozzle. The diaphragm just above the nozzle acts as a flapper.

The operation of the force-balance controller shown in Figure 4–10 may be summarized as follows: 20-psig air from an air supply flows through an orifice, causing a reduced pressure in the bottom chamber. Air in this chamber escapes to the atmosphere through the nozzle. The flow through the nozzle depends on the gap and the pressure drop across it. An increase in the reference input pressure P_r, while the output pressure P_o remains the same, causes the valve stem to move down, decreasing the gap between the nozzle and the flapper diaphragm. This causes the control pressure P_c to increase. Let

$$p_e = P_r - P_o \tag{4–20}$$

If $p_e = 0$, there is an equilibrium state with the nozzle-flapper distance equal to $\bar{X}$ and the control pressure equal to $\bar{P}_c$. At this equilibrium state, $P_1 = \bar{P}_c k$ (where $k < 1$) and

$$\bar{X} = \alpha(\bar{P}_c A_1 - \bar{P}_c k A_1) \tag{4–21}$$

where α is a constant.

Let us assume that $p_e \neq 0$ and define small variations in the nozzle-flapper distance and control pressure as x and p_c, respectively. Then we obtain the following equation:

$$\bar{X} + x = \alpha[(\bar{P}_c + p_c)A_1 - (\bar{P}_c + p_c)kA_1 - p_e(A_2 - A_1)] \tag{4–22}$$

From Equations (4–21) and (4–22), we obtain

$$x = \alpha[p_c(1 - k)A_1 - p_e(A_2 - A_1)] \tag{4–23}$$

At this point, we must examine the quantity x. In the design of pneumatic controllers, the nozzle-flapper distance is made quite small. In view of the fact that x/α is very much smaller than $p_c(1 - k)A_1$ or $p_e(A_2 - A_1)$, that is, for $p_e \neq 0$

$$\frac{x}{\alpha} \ll p_c(1 - k)A_1$$

$$\frac{x}{\alpha} \ll p_e(A_2 - A_1)$$

we may neglect the term x in our analysis. Equation (4–23) can then be rewritten to reflect this assumption as follows:

$$p_c(1 - k)A_1 = p_e(A_2 - A_1)$$

and the transfer function between p_c and p_e becomes

$$\frac{P_c(s)}{P_e(s)} = \frac{A_2 - A_1}{A_1}\frac{1}{1 - k} = K_p$$

where p_e is defined by Equation (4–20). The controller shown in Figure 4–10 is a proportional controller. The value of gain K_p increases as k approaches unity. Note that the value of k depends on the diameters of the orifices in the inlet and outlet pipes of the feedback chamber. (The value of k approaches unity as the resistance to flow in the orifice of the inlet pipe is made smaller.)

PETITIONER'S EXHIBIT 1002
US PATENT NO. 6,581,565
Page 9967

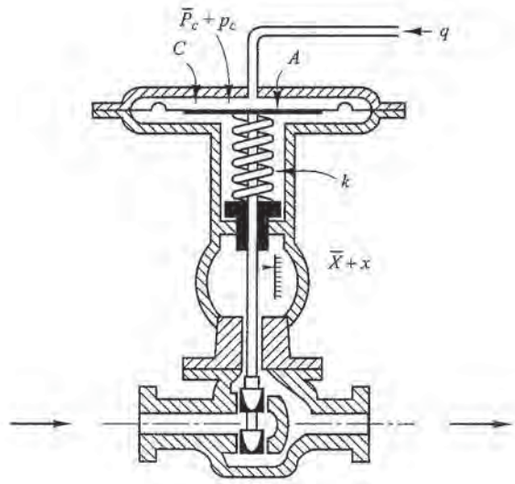

Figure 4–11
Schematic diagram of a pneumatic actuating valve.

Pneumatic Actuating Valves. One characteristic of pneumatic controls is that they almost exclusively employ pneumatic actuating valves. A pneumatic actuating valve can provide a large power output. (Since a pneumatic actuator requires a large power input to produce a large power output, it is necessary that a sufficient quantity of pressurized air be available.) In practical pneumatic actuating valves, the valve characteristics may not be linear; that is, the flow may not be directly proportional to the valve stem position, and also there may be other nonlinear effects, such as hysteresis.

Consider the schematic diagram of a pneumatic actuating valve shown in Figure 4–11. Assume that the area of the diaphragm is A. Assume also that when the actuating error is zero the control pressure is equal to $\bar{P}_c$ and the valve displacement is equal to $\bar{X}$.

In the following analysis, we shall consider small variations in the variables and linearize the pneumatic actuating valve. Let us define the small variation in the control pressure and the corresponding valve displacement to be p_c and x, respectively. Since a small change in the pneumatic pressure force applied to the diaphragm repositions the load, consisting of the spring, viscous friction, and mass, the force balance equation becomes

$$Ap_c = m\ddot{x} + b\dot{x} + kx$$

where m = mass of the valve and valve stem
b = viscous-friction coefficient
k = spring constant

If the force due to the mass and viscous friction are negligibly small, then this last equation can be simplified to

$$Ap_c = kx$$

The transfer function between x and p_c thus becomes

$$\frac{X(s)}{P_c(s)} = \frac{A}{k} = K_c$$

PETITIONER'S EXHIBIT 1002
US PATENT NO. 6,581,565
Page 9968

where $X(s) = \mathscr{L}[x]$ and $P_c(s) = \mathscr{L}[p_c]$. If q_i, the change in flow through the pneumatic actuating valve, is proportional to x, the change in the valve-stem displacement, then

$$\frac{Q_i(s)}{X(s)} = K_q$$

where $Q_i(s) = \mathscr{L}[q_i]$ and K_q is a constant. The transfer function between q_i and p_c becomes

$$\frac{Q_i(s)}{P_c(s)} = K_c K_q = K_v$$

where K_v is a constant.

The standard control pressure for this kind of a pneumatic actuating valve is between 3 and 15 psig. The valve-stem displacement is limited by the allowable stroke of the diaphragm and is only a few inches. If a longer stroke is needed, a piston-spring combination may be employed.

In pneumatic actuating valves, the static-friction force must be limited to a low value so that excessive hysteresis does not result. Because of the compressibility of air, the control action may not be positive; that is, an error may exist in the valve-stem position. The use of a valve positioner results in improvements in the performance of a pneumatic actuating valve.

Basic Principle for Obtaining Derivative Control Action. We shall now present methods for obtaining derivative control action. We shall again place the emphasis on the principle and not on the details of the actual mechanisms.

The basic principle for generating a desired control action is to insert the inverse of the desired transfer function in the feedback path. For the system shown in Figure 4–12, the closed-loop transfer function is

$$\frac{C(s)}{R(s)} = \frac{G(s)}{1 + G(s)H(s)}$$

If $|G(s)H(s)| \gg 1$, then $C(s)/R(s)$ can be modified to

$$\frac{C(s)}{R(s)} = \frac{1}{H(s)}$$

Thus, if proportional-plus-derivative control action is desired, we insert an element having the transfer function $1/(Ts + 1)$ in the feedback path.

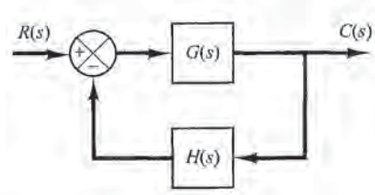

Figure 4–12
Control system.

PETITIONER'S EXHIBIT 1002
US PATENT NO. 6,581,565
Page 9969

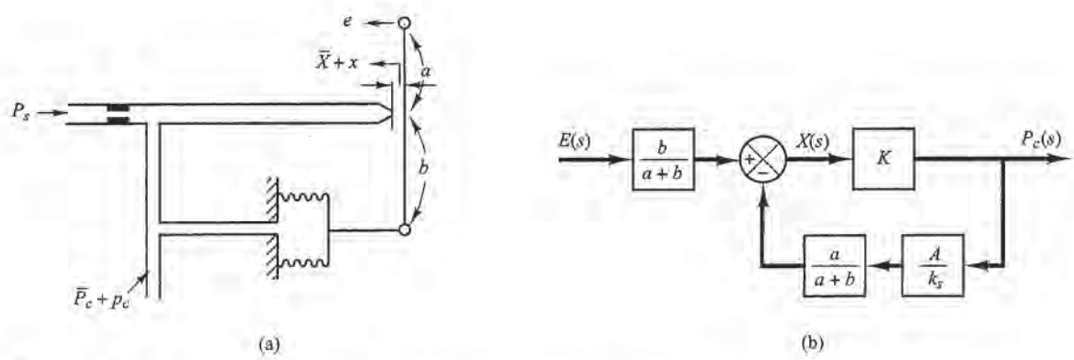

Figure 4–13
(a) Pneumatic proportional controller; (b) block diagram of the controller.

Consider the pneumatic controller shown in Figure 4–13(a). Considering small changes in the variables, we can draw a block diagram of this controller as shown in Figure 4–13(b). From the block diagram we see that the controller is of proportional type.

We shall now show that the addition of a restriction in the negative feedback path will modify the proportional controller to a proportional-plus-derivative controller, or a PD controller.

Consider the pneumatic controller shown in Figure 4–14(a). Assuming again small changes in the actuating error, nozzle-flapper distance, and control pressure, we can summarize the operation of this controller as follows: Let us first assume a small step change in e. Then the change in the control pressure p_c will be instantaneous. The restriction R

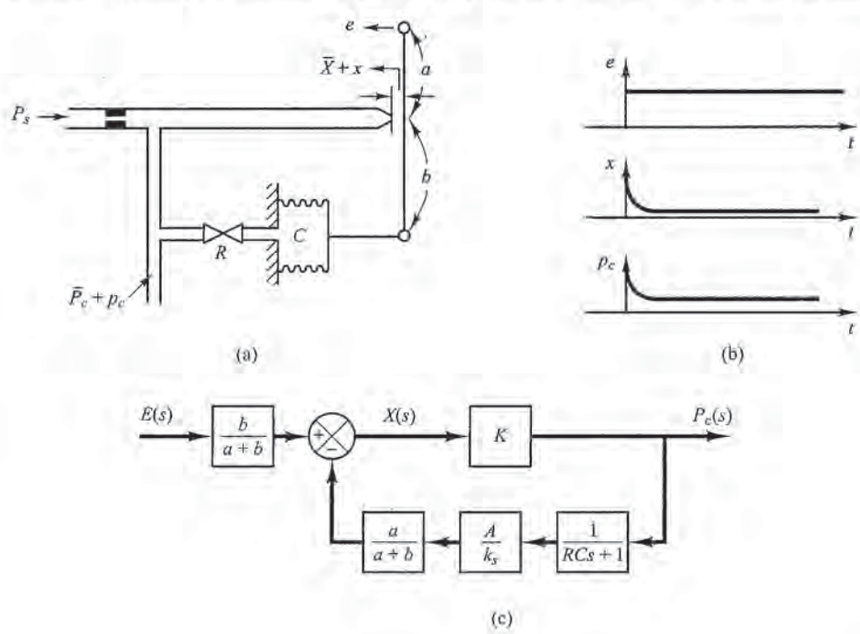

Figure 4–14
(a) Pneumatic proportional-plus-derivative controller; (b) step change in e and the corresponding changes in x and p_c plotted versus t; (c) block diagram of the controller.

PETITIONER'S EXHIBIT 1002
US PATENT NO. 6,581,565
Page 9970

will momentarily prevent the feedback bellows from sensing the pressure change p_c. Thus the feedback bellows will not respond momentarily, and the pneumatic actuating valve will feel the full effect of the movement of the flapper. As time goes on, the feedback bellows will expand. The change in the nozzle-flapper distance x and the change in the control pressure p_c can be plotted against time t, as shown in Figure 4–14(b). At steady state, the feedback bellows acts like an ordinary feedback mechanism. The curve p_c versus t clearly shows that this controller is of the proportional plus-derivative type.

A block diagram corresponding to this pneumatic controller is shown in Figure 4–14(c). In the block diagram, K is a constant, A is the area of the bellows, and k_s is the equivalent spring constant of the bellows. The transfer function between p_c and e can be obtained from the block diagram as follows:

$$\frac{P_c(s)}{E(s)} = \frac{\dfrac{b}{a+b}K}{1 + \dfrac{Ka}{a+b}\dfrac{A}{k_s}\dfrac{1}{RCs+1}}$$

In such a controller the loop gain $|KaA/[(a+b)k_s(RCs+1)]|$ is made much greater than unity. Thus the transfer function $P_c(s)/E(s)$ can be simplified to give

$$\frac{P_c(s)}{E(s)} = K_p(1 + T_d s)$$

where

$$K_p = \frac{bk_s}{aA}, \qquad T_d = RC$$

Thus, delayed negative feedback, or the transfer function $1/(RCs + 1)$ in the feedback path, modifies the proportional controller to a proportional-plus-derivative controller.

Note that if the feedback valve is fully opened the control action becomes proportional. If the feedback valve is fully closed, the control action becomes narrow-band proportional (on–off).

Obtaining Pneumatic Proportional-Plus-Integral Control Action. Consider the proportional controller shown in Figure 4–13(a). Considering small changes in the variables, we can show that the addition of delayed positive feedback will modify this proportional controller to a proportional-plus-integral controller, or a PI controller.

Consider the pneumatic controller shown in Figure 4–15(a). The operation of this controller is as follows: The bellows denoted by I is connected to the control pressure source without any restriction. The bellows denoted by II is connected to the control pressure source through a restriction. Let us assume a small step change in the actuating error. This will cause the back pressure in the nozzle to change instantaneously. Thus a change in the control pressure p_c also occurs instantaneously. Due to the restriction of the valve in the path to bellows II, there will be a pressure drop across the valve. As time goes on, air will flow across the valve in such a way that the change in pressure in bellows II attains the value p_c. Thus bellows II will expand or contract as time elapses in such a way as to move the flapper an additional amount in the direction of the original displacement e. This will cause the back pressure p_c in the nozzle to change continuously, as shown in Figure 4–15(b).

PETITIONER'S EXHIBIT 1002
US PATENT NO. 6,581,565
Page 9971

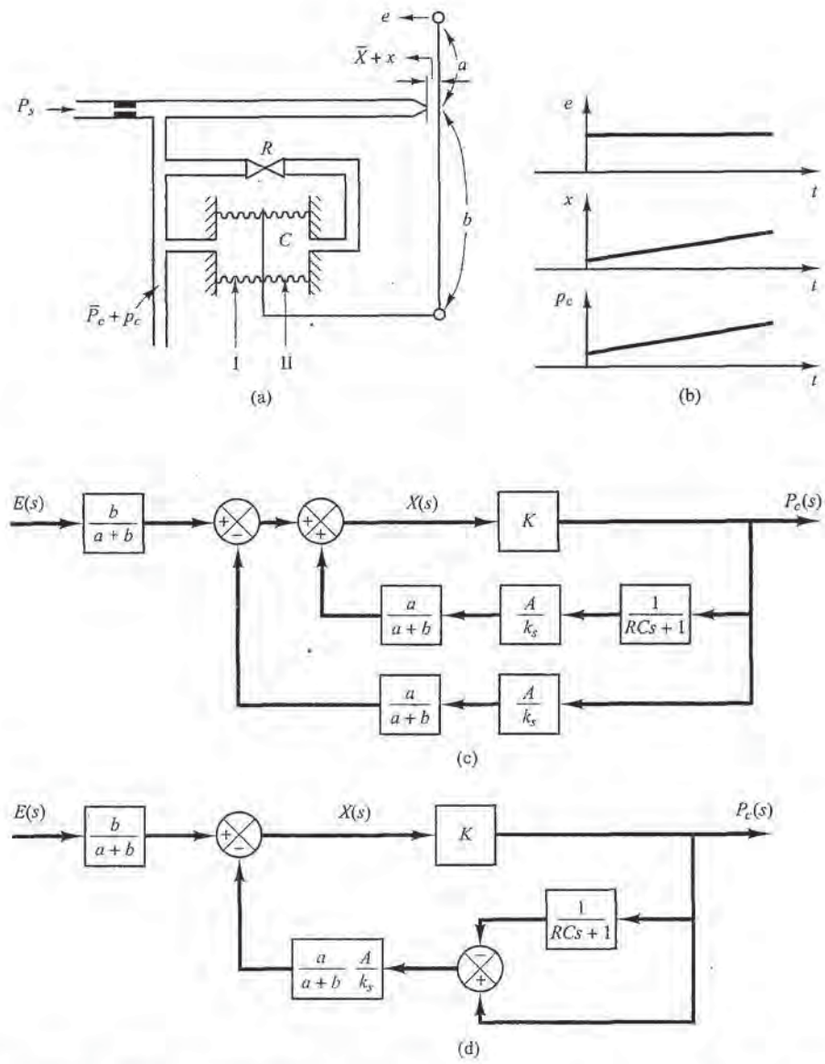

Figure 4–15
(a) Pneumatic proportional-plus-integral controller; (b) step change in e and the corresponding changes in x and p_c plotted versus t; (c) block diagram of the controller; (d) simplified block diagram.

Note that the integral control action in the controller takes the form of slowly canceling the feedback that the proportional control originally provided.

A block diagram of this controller under the assumption of small variations in the variables is shown in Figure 4–15(c). A simplification of this block diagram yields Figure 4–15(d). The transfer function of this controller is

$$\frac{P_c(s)}{E(s)} = \frac{\dfrac{b}{a+b}K}{1 + \dfrac{Ka}{a+b}\dfrac{A}{k_s}\left(1 - \dfrac{1}{RCs+1}\right)}$$

PETITIONER'S EXHIBIT 1002
US PATENT NO. 6,581,565
Page 9972

where K is a constant, A is the area of the bellows, and k_s is the equivalent spring constant of the combined bellows. If $|KaARCs/[(a + b)k_s(RCs + 1)]| \gg 1$, which is usually the case, the transfer function can be simplified to

$$\frac{P_c(s)}{E(s)} = K_p\left(1 + \frac{1}{T_i s}\right)$$

where

$$K_p = \frac{bk_s}{aA}, \qquad T_i = RC$$

Obtaining Pneumatic Proportional-Plus-Integral-Plus-Derivative Control Action. A combination of the pneumatic controllers shown in Figures 4–14(a) and 4–15(a) yields a proportional-plus-integral-plus-derivative controller, or a PID controller. Figure 4–16(a) shows a schematic diagram of such a controller. Figure 4–16(b) shows a block diagram of this controller under the assumption of small variations in the variables.

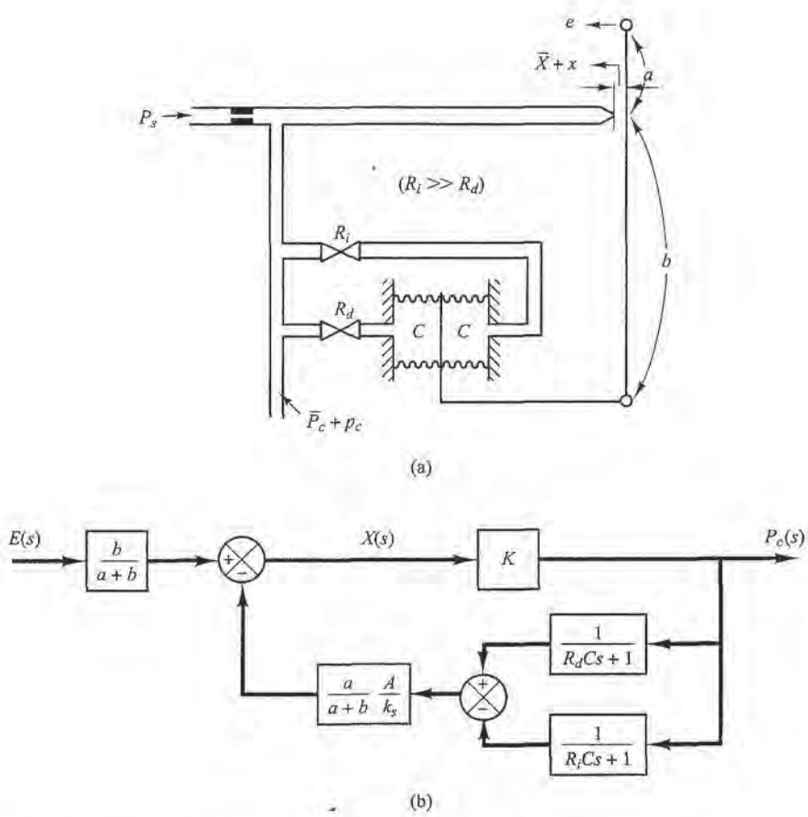

Figure 4–16
(a) Pneumatic proportional-plus-integral-plus-derivative controller; (b) block diagram of the controller.

PETITIONER'S EXHIBIT 1002
US PATENT NO. 6,581,565
Page 9973

The transfer function of this controller is

$$\frac{P_c(s)}{E(s)} = \frac{\dfrac{bK}{a+b}}{1 + \dfrac{Ka}{a+b}\dfrac{A}{k_s}\dfrac{(R_iC - R_dC)s}{(R_dCs+1)(R_iCs+1)}}$$

By defining

$$T_i = R_iC, \qquad T_d = R_dC$$

and noting that under normal operation $|KaA(T_i - T_d)s/[(a+b)k_s(T_ds+1)(T_is+1)]| \gg 1$ and $T_i \gg T_d$, we obtain

$$\begin{aligned}\frac{P_c(s)}{E(s)} &\doteqdot \frac{bk_s}{aA}\frac{(T_ds+1)(T_is+1)}{(T_i - T_d)s} \\ &\doteqdot \frac{bk_s}{aA}\frac{T_dT_is^2 + T_is + 1}{T_is} \\ &= K_p\left(1 + \frac{1}{T_is} + T_ds\right) \qquad (4\text{–}24)\end{aligned}$$

where

$$K_p = \frac{bk_s}{aA}$$

Equation (4–24) indicates that the controller shown in Figure 4–16(a) is a proportional-plus-integral-plus-derivative controller or a PID controller.

4–4 HYDRAULIC SYSTEMS

Except for low-pressure pneumatic controllers, compressed air has seldom been used for the continuous control of the motion of devices having significant mass under external load forces. For such a case, hydraulic controllers are generally preferred.

Hydraulic Systems. The widespread use of hydraulic circuitry in machine tool applications, aircraft control systems, and similar operations occurs because of such factors as positiveness, accuracy, flexibility, high horsepower-to-weight ratio, fast starting, stopping, and reversal with smoothness and precision, and simplicity of operations.

The operating pressure in hydraulic systems is somewhere between 145 and 5000 $lb_f/in.^2$ (between 1 and 35 MPa). In some special applications, the operating pressure may go up to 10,000 $lb_f/in.^2$ (70 MPa). For the same power requirement, the weight and size of the hydraulic unit can be made smaller by increasing the supply pressure. With high-pressure hydraulic systems, very large force can be obtained. Rapid-acting, accurate positioning of heavy loads is possible with hydraulic systems. A combination of electronic and hydraulic systems is widely used because it combines the advantages of both electronic control and hydraulic power.

PETITIONER'S EXHIBIT 1002
US PATENT NO. 6,581,565
Page 9974

Advantages and Disadvantages of Hydraulic Systems. There are certain advantages and disadvantages in using hydraulic systems rather than other systems. Some of the advantages are the following:

1. Hydraulic fluid acts as a lubricant, in addition to carrying away heat generated in the system to a convenient heat exchanger.
2. Comparatively small sized hydraulic actuators can develop large forces or torques.
3. Hydraulic actuators have a higher speed of response with fast starts, stops, and speed reversals.
4. Hydraulic actuators can be operated under continuous, intermittent, reversing, and stalled conditions without damage.
5. Availability of both linear and rotary actuators gives flexibility in design.
6. Because of low leakages in hydraulic actuators, speed drop when loads are applied is small.

On the other hand, several disadvantages tend to limit their use.

1. Hydraulic power is not readily available compared to electric power.
2. Cost of a hydraulic system may be higher than a comparable electrical system performing a similar function.
3. Fire and explosion hazards exist unless fire-resistant fluids are used.
4. Because it is difficult to maintain a hydraulic system that is free from leaks, the system tends to be messy.
5. Contaminated oil may cause failure in the proper functioning of a hydraulic system.
6. As a result of the nonlinear and other complex characteristics involved, the design of sophisticated hydraulic systems is quite involved.
7. Hydraulic circuits have generally poor damping characteristics. If a hydraulic circuit is not designed properly, some unstable phenomena may occur or disappear, depending on the operating condition.

Comments. Particular attention is necessary to ensure that the hydraulic system is stable and satisfactory under all operating conditions. Since the viscosity of hydraulic fluid can greatly affect damping and friction effects of the hydraulic circuits, stability tests must be carried out at the highest possible operating temperature.

Note that most hydraulic systems are nonlinear. Sometimes, however, it is possible to linearize nonlinear systems so as to reduce their complexity and permit solutions that are sufficiently accurate for most purposes. A useful linearization technique for dealing with nonlinear systems was presented in Section 3–10.

Hydraulic Servo System. Figure 4–17(a) shows a hydraulic servomotor. It is essentially a pilot-valve-controlled hydraulic power amplifier and actuator. The pilot valve is a balanced valve, in the sense that the pressure forces acting on it are all balanced. A very large power output can be controlled by a pilot valve, which can be positioned with very little power.

In practice, the ports shown in Figure 4–17(a) are often made wider than the corresponding valves. In such a case, there is always leakage through the valves. Such leak-

PETITIONER'S EXHIBIT 1002
US PATENT NO. 6,581,565
Page 9975

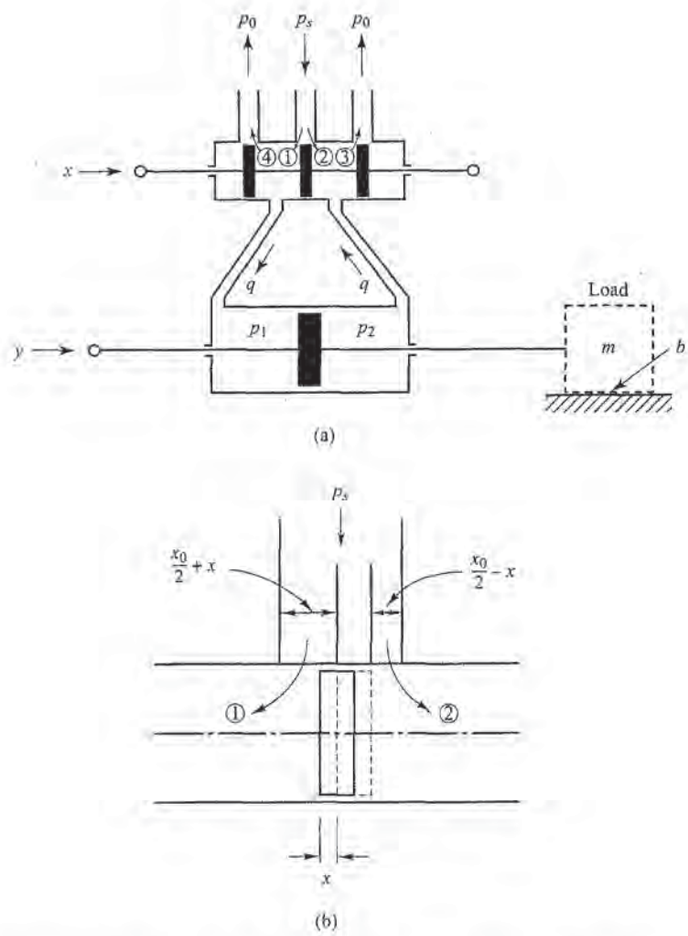

Figure 4–17
(a) Hydraulic servo system; (b) enlarged diagram of the valve orifice area.

age improves both the sensitivity and the linearity of the hydraulic servomotor. In the following analysis we shall make the assumption that the ports are made wider than the valves, that is, the valves are underlapped. [Note that sometimes a dither signal, a high-frequency signal of very small amplitude (with respect to the maximum displacement of the valve), is superimposed on the motion of the pilot valve. This also improves the sensitivity and linearity. In this case also there is leakage through the valve.]

We shall apply the linearization technique presented in Section 3–10 to obtain a linearized mathematical model of the hydraulic servomotor. We assume that the valve is underlapped and symmetrical and admits hydraulic fluid under high pressure into a power cylinder that contains a large piston, so that a large hydraulic force is established to move a load.

In Figure 4–17(b) we have an enlarged diagram of the valve orifice area. Let us define the valve orifice areas of ports 1, 2, 3, 4 as A_1, A_2, A_3, A_4, respectively. Also, define the flow rates through ports 1, 2, 3, 4 as q_1, q_2, q_3, q_4, respectively. Note that, since the

PETITIONER'S EXHIBIT 1002
US PATENT NO. 6,581,565
Page 9976

valve is symmetrical, $A_1 = A_3$ and $A_2 = A_4$. Assuming the displacement x to be small, we obtain

$$A_1 = A_3 = k\left(\frac{x_0}{2} + x\right)$$

$$A_2 = A_4 = k\left(\frac{x_0}{2} - x\right)$$

where k is a constant.

Furthermore, we shall assume that the return pressure p_o in the return line is small and thus can be neglected. Then, referring to Figure 4–17(a), flow rates through valve orifices are

$$q_1 = c_1 A_1 \sqrt{\frac{2g}{\gamma}(p_s - p_1)} = C_1\sqrt{p_s - p_1}\left(\frac{x_0}{2} + x\right)$$

$$q_2 = c_2 A_2 \sqrt{\frac{2g}{\gamma}(p_s - p_2)} = C_2\sqrt{p_s - p_2}\left(\frac{x_0}{2} - x\right)$$

$$q_3 = c_1 A_3 \sqrt{\frac{2g}{\gamma}(p_2 - p_0)} = C_1\sqrt{p_2 - p_0}\left(\frac{x_0}{2} + x\right) = C_1\sqrt{p_2}\left(\frac{x_0}{2} + x\right)$$

$$q_4 = c_2 A_4 \sqrt{\frac{2g}{\gamma}(p_1 - p_0)} = C_2\sqrt{p_1 - p_0}\left(\frac{x_0}{2} - x\right) = C_2\sqrt{p_1}\left(\frac{x_0}{2} - x\right)$$

where $C_1 = c_1 k\sqrt{2g/\gamma}$ and $C_2 = c_2 k\sqrt{2g/\gamma}$, and γ is the specific weight and is given by $\gamma = \rho g$, where ρ is mass density and g is the acceleration of gravity. The flow rate q to the left-hand side of the power piston is

$$q = q_1 - q_4 = C_1\sqrt{p_s - p_1}\left(\frac{x_0}{2} + x\right) - C_2\sqrt{p_1}\left(\frac{x_0}{2} - x\right) \tag{4–25}$$

The flow rate from the right-hand side of the power piston to the drain is the same as this q and is given by

$$q = q_3 - q_2 = C_1\sqrt{p_2}\left(\frac{x_0}{2} + x\right) - C_2\sqrt{p_s - p_2}\left(\frac{x_0}{2} - x\right)$$

In the present analysis we assume that the fluid is incompressible. Since the valve is symmetrical we have $q_1 = q_3$ and $q_2 = q_4$. By equating q_1 and q_3, we obtain

$$p_s - p_1 = p_2$$

or

$$p_s = p_1 + p_2$$

If we define the pressure difference across the power piston as Δp or

$$\Delta p = p_1 - p_2$$

then

$$p_1 = \frac{p_s + \Delta p}{2}, \qquad p_2 = \frac{p_s - \Delta p}{2}$$

PETITIONER'S EXHIBIT 1002
US PATENT NO. 6,581,565
Page 9977

For the symmetrical valve shown in Figure 4–17(a), the pressure in each side of the power piston is $(1/2)p_s$ when no load is applied, or $\Delta p = 0$. As the spool valve is displaced, the pressure in one line increases as the pressure in the other line decreases by the same amount.

In terms of p_s and Δp, we can rewrite the flow rate q given by Equation (4–25) as

$$q = q_1 - q_4 = C_1\sqrt{\frac{p_s - \Delta p}{2}}\left(\frac{x_0}{2} + x\right) - C_2\sqrt{\frac{p_s + \Delta p}{2}}\left(\frac{x_0}{2} - x\right)$$

Noting that the supply pressure p_s is constant. the flow rate q can be written as a function of the valve displacement x and pressure difference Δp, or

$$q = C_1\sqrt{\frac{p_s - \Delta p}{2}}\left(\frac{x_0}{2} + x\right) - C_2\sqrt{\frac{p_s + \Delta p}{2}}\left(\frac{x_0}{2} - x\right) = f(x, \Delta p)$$

By applying the linearization technique presented in Section 3–10 to this case, the linearized equation about point $x = \bar{x}$, $\Delta p = \Delta\bar{p}$, $q = \bar{q}$ is

$$q - \bar{q} = a(x - \bar{x}) + b(\Delta p - \Delta\bar{p}) \tag{4–26}$$

where

$$\bar{q} = f(\bar{x}, \Delta\bar{q})$$

$$a = \left.\frac{\partial f}{\partial x}\right|_{x=\bar{x},\,\Delta p=\Delta\bar{p}} = C_1\sqrt{\frac{p_s - \Delta\bar{p}}{2}} + C_2\sqrt{\frac{p_s + \Delta\bar{p}}{2}}$$

$$b = \left.\frac{\partial f}{\partial \Delta p}\right|_{x=\bar{x},\,\Delta p=\Delta\bar{p}} = -\left[\frac{C_1}{2\sqrt{2}\sqrt{p_s - \Delta\bar{p}}}\left(\frac{x_0}{2} + \bar{x}\right) + \frac{C_2}{2\sqrt{2}\sqrt{p_s + \Delta\bar{p}}}\left(\frac{x_0}{2} - \bar{x}\right)\right] < 0$$

Coefficients a and b here are called *valve coefficients*. Equation (4–26) is a linearized mathematical model of the spool valve near an operating point $x = \bar{x}$, $\Delta p = \Delta\bar{p}$, $q = \bar{q}$. The values of valve coefficients a and b vary with the operating point. Note that $\partial f/\partial\Delta p$ is negative and so b is negative.

Since the normal operating point is the point where $\bar{x} = 0$, $\Delta\bar{p} = 0$, $\bar{q} = 0$, near the normal operating point, Equation (4–26) becomes

$$q = K_1 x - K_2 \Delta p \tag{4–27}$$

where

$$K_1 = (C_1 + C_2)\sqrt{\frac{p_s}{2}} > 0$$

$$K_2 = (C_1 + C_2)\frac{x_0}{4\sqrt{2}\sqrt{p_s}} > 0$$

Equation (4–27) is a linearized mathematical model of the spool valve near the origin ($\bar{x} = 0$, $\Delta\bar{p} = 0$, $\bar{q} = 0$.) Note that the region near the origin is most important in this kind of system, because the system operation usually occurs near this point.

PETITIONER'S EXHIBIT 1002
US PATENT NO. 6,581,565
Page 9978

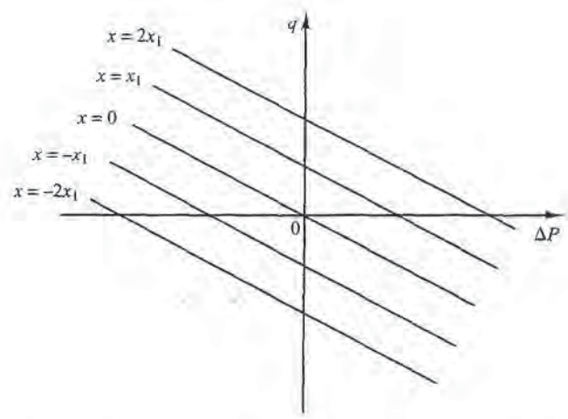

Figure 4–18
Characteristic curves of the linearized hydraulic servomotor.

Figure 4–18 shows this linearized relationship among q, x, and ΔP. The straight lines shown are the characteristic curves of the linearized hydraulic servomotor. This family of curves consists of equidistant parallel straight lines, parametrized by x.

In the present analysis, we assume that the load reactive forces are small so that the leakage flow rate and oil compressibility can be ignored. (For the case where the load reactive forces are large, see Problem **A–4–13**.)

Referring to Figure 4–17(a), we see that the rate of flow of oil q times dt is equal to the power piston displacement dy times the piston area A times the density of oil ρ. Thus, we obtain

$$A\rho\, dy = q\, dt$$

Notice that for a given flow rate q the larger the piston area A is, the lower will be the velocity dy/dt. Hence, if the piston area A is made smaller, the other variables remaining constant, the velocity dy/dt will become higher. Also, an increased flow rate q will cause an increased velocity of the power piston and will make the response time shorter.

Equation (4–27) can now be written as

$$\Delta P = \frac{1}{K_2}\left(K_1 x - A\rho\frac{dy}{dt}\right)$$

The force developed by the power piston is equal to the pressure difference ΔP times the piston area A or

$$\begin{aligned}\text{Force developed by the power piston} &= A\,\Delta P \\ &= \frac{A}{K_2}\left(K_1 x - A\rho\frac{dy}{dt}\right)\end{aligned}$$

For a given maximum force, if the pressure difference is sufficiently high, the piston area, or the volume of oil in the cylinder, can be made small. Consequently, to minimize the weight of the controller, we must make the supply pressure sufficiently high.

PETITIONER'S EXHIBIT 1002
US PATENT NO. 6,581,565
Page 9979

Assume that the power piston moves a load consisting of a mass and viscous friction. Then the force developed by the power piston is applied to the load mass and friction, and we obtain

$$m\ddot{y} + b\dot{y} = \frac{A}{K_2}(K_1 x - A\rho\dot{y})$$

or

$$m\ddot{y} + \left(b + \frac{A^2\rho}{K_2}\right)\dot{y} = \frac{AK_1}{K_2}x \tag{4–28}$$

where m is the mass of the load and b is the viscous-friction coefficient.

Assuming that the pilot valve displacement x is the input and the power piston displacement y is the output, we find that the transfer function for the hydraulic servomotor is, from Equation (4–28),

$$\frac{Y(s)}{X(s)} = \frac{1}{s\left[\left(\frac{mK_2}{AK_1}\right)s + \frac{bK_2}{AK_1} + \frac{A\rho}{K_1}\right]}$$

$$= \frac{K}{s(Ts + 1)} \tag{4–29}$$

where

$$K = \frac{1}{\frac{bK_2}{AK_1} + \frac{A\rho}{K_1}} \quad \text{and} \quad T = \frac{mK_2}{bK_2 + A^2\rho}$$

From Equation (4–29) we see that this transfer function is of the second order. If the ratio $mK_2/(bK_2 + A^2\rho)$ is negligibly small or the time constant T is negligible, the transfer function $Y(s)/X(s)$ can be simplified to give

$$\frac{Y(s)}{X(s)} = \frac{K}{s}$$

It is noted that a more detailed analysis shows that if oil leakage, compressibility (including the effects of dissolved air), expansion of pipelines, and the likes are taken into consideration, the transfer function becomes

$$\frac{Y(s)}{X(s)} = \frac{K}{s(T_1 s + 1)(T_2 s + 1)}$$

where T_1 and T_2 are time constants. As a matter of fact, these time constants depend on the volume of oil in the operating circuit. The smaller the volume, the smaller the time constants.

Hydraulic Integral Controller. The hydraulic servomotor shown in Figure 4–19 is a pilot-valve-controlled hydraulic power amplifier and actuator. Similar to the hydraulic servo system shown in Figure 4–17, for negligibly small load mass the servomotor shown in Figure 4–19 acts as an integrator or an integral controller. Such a servomotor constitutes the basis of the hydraulic control circuit.

PETITIONER'S EXHIBIT 1002
US PATENT NO. 6,581,565
Page 9980

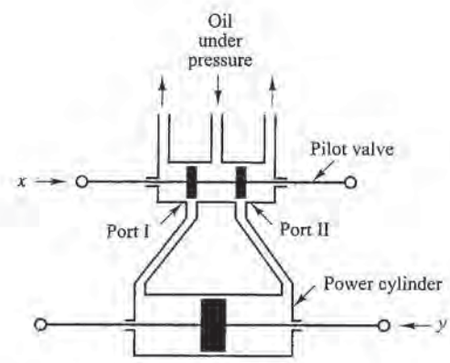

Figure 4–19
Hydraulic servomotor.

In the hydraulic servomotor shown in Figure 4–19, the pilot valve (a four-way valve) has two lands on the spool. If the width of the land is smaller than the port in the valve sleeve, the valve is said to be *underlapped*. *Overlapped* valves have a land width greater than the port width. A *zero-lapped* valve has a land width that is identical to the port width. (If the pilot valve is a zero-lapped valve, analyses of hydraulic servomotors become simpler.)

In the present analysis, we assume that hydraulic fluid is incompressible and that the inertia force of the power piston and load is negligible compared to the hydraulic force at the power piston. We also assume that the pilot valve is a zero-lapped valve, and the oil flow rate is proportional to the pilot valve displacement.

Operation of this hydraulic servomotor is as follows. If input x moves the pilot valve to the right, port II is uncovered, and so high-pressure oil enters the right-hand side of the power piston. Since port I is connected, to the drain port, the oil in the left-hand side of the power piston is returned to the drain. The oil flowing into the power cylinder is at high pressure; the oil flowing out from the power cylinder into the drain is at low pressure. The resulting difference in pressure on both sides of the power piston will cause it to move to the left.

Note that the rate of flow of oil q(kg/sec) times dt (sec) is equal to the power piston displacement dy(m) times the piston area $A(\text{m}^2)$ times the density of oil $\rho(\text{kg/m}^3)$. Therefore,

$$A\rho\, dy = q\, dt \tag{4–30}$$

Because of the assumption that the oil flow rate q is proportional to the pilot valve displacement x, we have

$$q = K_1 x \tag{4–31}$$

where K_1 is a positive constant. From Equations (4–30) and (4–31) we obtain

$$A\rho \frac{dy}{dt} = K_1 x$$

The Laplace transform of this last equation, assuming a zero initial condition, gives

$$A\rho s Y(s) = K_1 X(s)$$

PETITIONER'S EXHIBIT 1002
US PATENT NO. 6,581,565
Page 9981

or

$$\frac{Y(s)}{X(s)} = \frac{K_1}{A\rho s} = \frac{K}{s}$$

where $K = K_1/(A\rho)$. Thus the hydraulic servomotor shown in Figure 4–19 acts as an integral controller.

Hydraulic Proportional Controller. It has been shown that the servomotor in Figure 4–19 acts as an integral controller. This servomotor can be modified to a proportional controller by means of a feedback link. Consider the hydraulic controller shown in Figure 4–20(a). The left-hand side of the pilot valve is joined to the left-hand side of the power piston by a link ABC. This link is a floating link rather than one moving about a fixed pivot.

The controller here operates in the following way. If input e moves the pilot valve to the right, port II will be uncovered and high-pressure oil will flow through port II into the right-hand side of the power piston and force this piston to the left. The power piston, in moving to the left, will carry the feedback link ABC with it, thereby moving the pilot valve to the left. This action continues until the pilot piston again covers ports I and II. A block diagram of the system can be drawn as in Figure 4–20(b). The transfer function between $Y(s)$ and $E(s)$ is given by

$$\frac{Y(s)}{E(s)} = \frac{\dfrac{b}{a+b}\dfrac{K}{s}}{1 + \dfrac{K}{s}\dfrac{a}{a+b}}$$

Noting that under the normal operating conditions we have $|Ka/[s(a+b)]| \gg 1$, this last equation can be simplified to

$$\frac{Y(s)}{E(s)} = \frac{b}{a} = K_p$$

The transfer function between y and e becomes a constant. Thus, the hydraulic controller shown in Figure 4–20(a) acts as a proportional controller, the gain of which is K_p. This gain

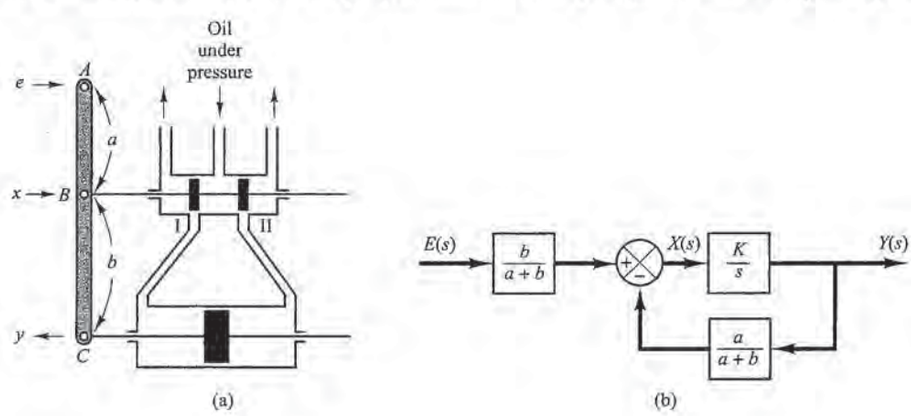

Figure 4–20
(a) Servomotor that acts as a proportional controller; (b) block diagram of the servomotor.

PETITIONER'S EXHIBIT 1002
US PATENT NO. 6,581,565
Page 9982

can be adjusted by effectively changing the lever ratio b/a. (The adjusting mechanism is not shown in the diagram.)

We have thus seen that the addition of a feedback link will cause the hydraulic servomotor to act as a proportional controller.

Dashpots. The dashpot (also called a damper) shown in Figure 4–21(a) acts as a differentiating element. Suppose that we introduce a step displacement to the piston position y. Then the displacement z becomes equal to y momentarily. Because of the spring force, however, the oil will flow through the resistance R and the cylinder will come back to the original position. The curves y versus t and z versus t are shown in Figure 4–21(b).

Let us derive the transfer function between the displacement z and displacement y. Define the pressures existing on the right and left sides of the piston as $P_1(\text{lb}_f/\text{in.}^2)$ and $P_2(\text{lb}_f/\text{in.}^2)$, respectively. Suppose that the inertia force involved is negligible. Then the force acting on the piston must balance the spring force. Thus

$$A(P_1 - P_2) = kz$$

where A = piston area, in.^{2}
k = spring constant, lb_f/in.

The flow rate q is given by

$$q = \frac{P_1 - P_2}{R}$$

where q = flow rate through the restriction, lb/sec
R = resistance to flow at the restriction, lb_f-sec/in.^{2}-lb

Since the flow through the restriction during dt seconds must equal the change in the mass of oil to the left of the piston during the same dt seconds, we obtain

$$q\,dt = A\rho(dy - dz)$$

where ρ = density, lb/in.^{3}. (We assume that the fluid is incompressible or ρ = constant.) This last equation can be rewritten as

$$\frac{dy}{dt} - \frac{dz}{dt} = \frac{q}{A\rho} = \frac{P_1 - P_2}{RA\rho} = \frac{kz}{RA^2\rho}$$

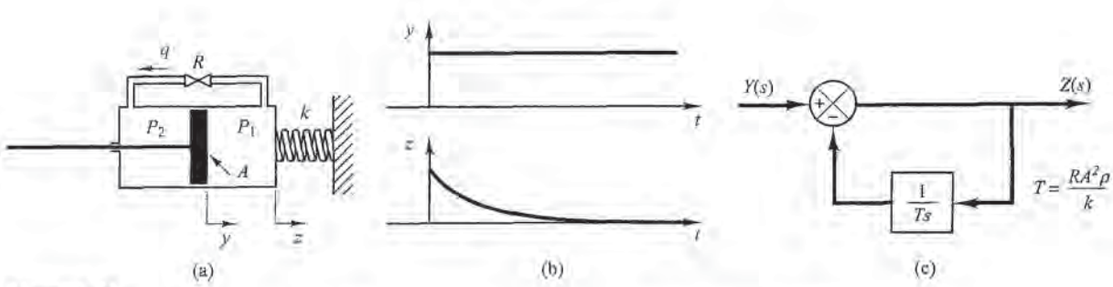

Figure 4–21
(a) Dashpot; (b) step change in y and the corresponding change in z plotted versus t; (c) block diagram of the dashpot.

PETITIONER'S EXHIBIT 1002
US PATENT NO. 6,581,565
Page 9983

or

$$\frac{dy}{dt} = \frac{dz}{dt} + \frac{kz}{RA^2\rho}$$

Taking the Laplace transforms of both sides of this last equation, assuming zero initial conditions, we obtain

$$sY(s) = sZ(s) + \frac{k}{RA^2\rho} Z(s)$$

The transfer function of this system thus becomes

$$\frac{Z(s)}{Y(s)} = \frac{s}{s + \dfrac{k}{RA^2\rho}}$$

Let us define $RA^2\rho/k = T$. (Note that $RA^2\rho/k$ has the dimension of time.) Then

$$\frac{Z(s)}{Y(s)} = \frac{Ts}{Ts + 1} = \frac{1}{1 + \dfrac{1}{Ts}}$$

Clearly, the dashpot is a differentiating element. Figure 4–21(c) shows a block diagram representation for this system.

Obtaining Hydraulic Proportional-Plus-Integral Control Action. Figure 4–22(a) shows a schematic diagram of a hydraulic proportional-plus-integral controller. A block diagram of this controller is shown in Figure 4–22(b). The transfer function $Y(s)/E(s)$ is given by

$$\frac{Y(s)}{E(s)} = \frac{\dfrac{b}{a+b}\dfrac{K}{s}}{1 + \dfrac{Ka}{a+b}\dfrac{T}{Ts+1}}$$

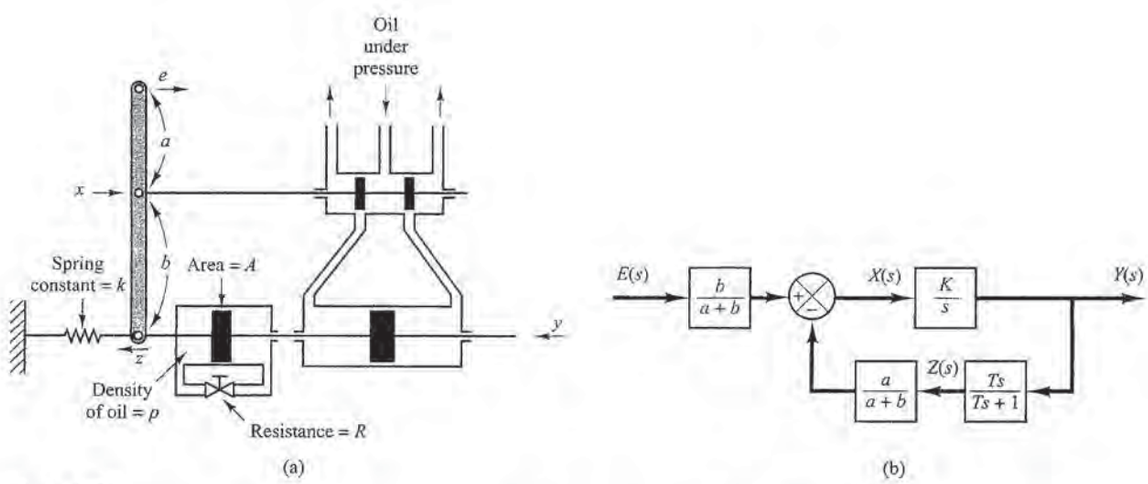

Figure 4–22
(a) Schematic diagram of a hydraulic proportional-plus-integral controller; (b) block diagram of the controller.

PETITIONER'S EXHIBIT 1002
US PATENT NO. 6,581,565
Page 9984

In such a controller, under normal operation $|KaT/[(a + b)(Ts + 1)]| \gg 1$, with the result that

$$\frac{Y(s)}{E(s)} = K_p\left(1 + \frac{1}{T_i s}\right)$$

where

$$K_p = \frac{b}{a}, \qquad T_i = T = \frac{RA^2\rho}{k}$$

Thus the controller shown in Figure 4–23(a) is a proportional-plus-integral controller (PI controller).

Obtaining Hydraulic Proportional-Plus-Derivative Control Action. Figure 4–23(a) shows a schematic diagram of a hydraulic proportional-plus-derivative controller. The cylinders are fixed in space and the pistons can move. For this system, notice that

$$k(y - z) = A(P_2 - P_1)$$

$$q = \frac{P_2 - P_1}{R}$$

$$q\,dt = \rho A\,dz$$

Hence

$$y = z + \frac{A}{k}qR = z + \frac{RA^2\rho}{k}\frac{dz}{dt}$$

or

$$\frac{Z(s)}{Y(s)} = \frac{1}{Ts + 1}$$

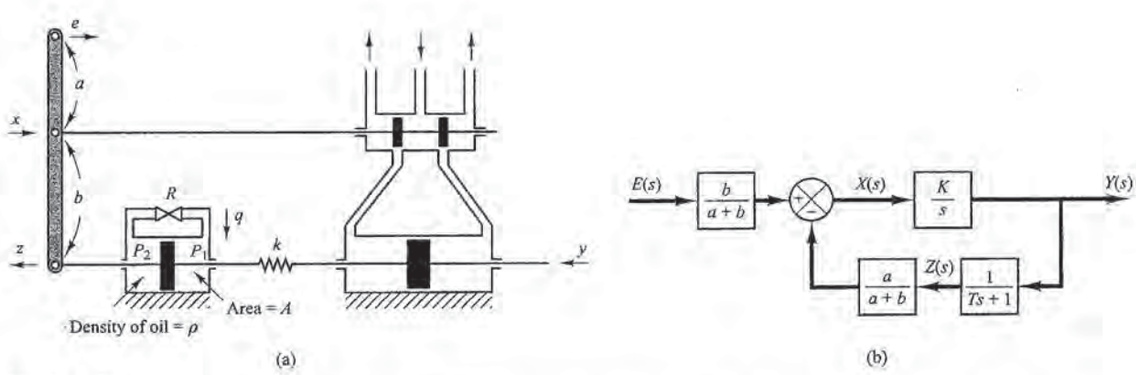

Figure 4–23
(a) Schematic diagram of a hydraulic proportional-plus-derivative controller; (b) block diagram of the controller.

where

$$T = \frac{RA^2\rho}{k}$$

A block diagram for this system is shown in Figure 4–23(b). From the block diagram the transfer function $Y(s)/E(s)$ can be obtained as

$$\frac{Y(s)}{E(s)} = \frac{\dfrac{b}{a+b}\dfrac{K}{s}}{1 + \dfrac{a}{a+b}\dfrac{K}{s}\dfrac{1}{Ts+1}}$$

Under normal operation we have $|aK/[(a+b)s(Ts+1)]| \gg 1$. Hence

$$\frac{Y(s)}{E(s)} = K_p(1 + Ts)$$

where

$$K_p = \frac{b}{a}, \qquad T = \frac{RA^2\rho}{k}$$

Thus the controller shown in Figure 4–23(a) is a proportional-plus-derivative controller (PD controller).

Obtaining Hydraulic Proportional-Plus-Integral-Plus-Derivative Control Action. Figure 4–24 shows a schematic diagram of a hydraulic proportional-plus-integral-plus-derivative controller. It is a combination of the proportional-plus-integral controller and proportional-plus derivative controller.

If the two dashpots are identical, the transfer function $Z(s)/Y(s)$ can be obtained as follows:

$$\frac{Z(s)}{Y(s)} = \frac{T_1 s}{T_1T_2s^2 + (T_1 + 2T_2)s + 1}$$

(For the derivation of this transfer function, refer to Problem **A–4–12**.)

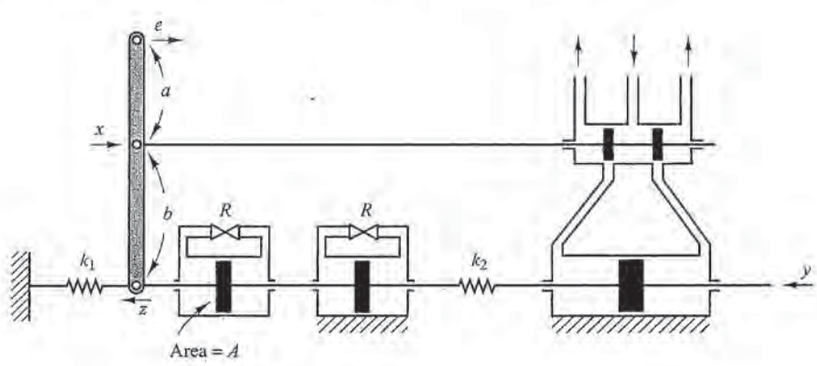

Figure 4–24
Schematic diagram of a hydraulic proportional-plus-integral-plus-derivative controller.

PETITIONER'S EXHIBIT 1002
US PATENT NO. 6,581,565
Page 9986

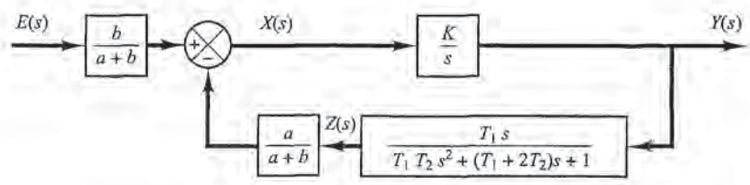

Figure 4–25
Block diagram for the system shown in Figure 4–24.

A block diagram for this system is shown in Figure 4–25. The transfer function $Y(s)/E(s)$ can be obtained as

$$\frac{Y(s)}{E(s)} = \frac{b}{a+b}\frac{\dfrac{K}{s}}{1 + \dfrac{a}{a+b}\dfrac{K}{s}\dfrac{T_1 s}{T_1T_2s^2 + (T_1 + 2T_2)s + 1}}$$

Under normal operation of the system we have

$$\left|\frac{a}{a+b}\frac{K}{s}\frac{T_1 s}{T_1T_2s^2 + (T_1 + 2T_2)s + 1}\right| \gg 1$$

Hence

$$\frac{Y(s)}{E(s)} = \frac{b}{a}\frac{T_1T_2s^2 + (T_1 + 2T_2)s + 1}{T_1 s}$$

$$= K_p + \frac{K_i}{s} + K_d s$$

where

$$K_p = \frac{b}{a}\frac{T_1 + 2T_2}{T_1}, \qquad K_i = \frac{b}{a}\frac{1}{T_1}, \qquad K_d = \frac{b}{a}T_2$$

Thus, the controller shown in Figure 4–24 is a proportional-plus-integral-plus-derivative controller (PID controller).

4–5 THERMAL SYSTEMS

Thermal systems are those that involve the transfer of heat from one substance to another. Thermal systems may be analyzed in terms of resistance and capacitance, although the thermal capacitance and thermal resistance may not be represented accurately as lumped parameters since they are usually distributed throughout the substance. For precise analysis, distributed-parameter models must be used. Here, however, to simplify the analysis we shall assume that a thermal system can be represented by a lumped-parameter model, that substances that are characterized by resistance to heat flow have negligible heat capacitance, and that substances that are characterized by heat capacitance have negligible resistance to heat flow.

There are three different ways heat can flow from one substance to another: conduction, convection, and radiation. Here we consider only conduction and convection. (Radiation heat transfer is appreciable only if the temperature of the emitter is very

0201

PETITIONER'S EXHIBIT 1002
US PATENT NO. 6,581,565
Page 9987

high compared to that of the receiver. Most thermal processes in process control systems do not involve radiation heat transfer.)

For conduction or convection heat transfer,

$$q = K\,\Delta\theta$$

where q = heat flow rate, kcal/sec
$\Delta\theta$ = temperature difference, °C
K = coefficient, kcal/sec °C

The coefficient K is given by

$$K = \frac{kA}{\Delta X}, \qquad \text{for conduction}$$

$$= HA, \qquad \text{for convection}$$

where k = thermal conductivity, kcal/m sec °C
A = area normal to heat flow, m^2
ΔX = thickness of conductor, m
H = convection coefficient, kcal/m^2 sec °C

Thermal Resistance and Thermal Capacitance. The thermal resistance R for heat transfer between two substances may be defined as follows:

$$R = \frac{\text{change in temperature difference, °C}}{\text{change in heat flow rate, kcal/sec}}$$

The thermal resistance for conduction or convection heat transfer is given by

$$R = \frac{d(\Delta\theta)}{dq} = \frac{1}{K}$$

Since the thermal conductivity and convection coefficients are almost constant, the thermal resistance for either conduction or convection is constant.

The thermal capacitance C is defined by

$$C = \frac{\text{change in heat stored, kcal}}{\text{change in temperature, °C}}$$

or

$$C = mc$$

where m = mass of substance considered, kg
c = specific heat of substance, kcal/kg °C

Thermal System. Consider the system shown in Figure 4–26(a). It is assumed that the tank is insulated to eliminate heat loss to the surrounding air. It is also assumed that there is no heat storage in the insulation and that the liquid in the tank is perfectly mixed so that it is at a uniform temperature. Thus, a single temperature is used to describe the temperature of the liquid in the tank and of the outflowing liquid.

PETITIONER'S EXHIBIT 1002
US PATENT NO. 6,581,565
Page 9988

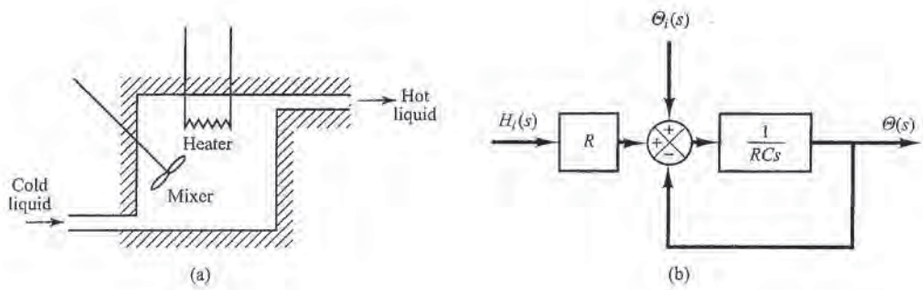

Figure 4–26
(a) Thermal system; (b) block diagram of the system.

Let us define

$\bar{\Theta}_i$ = steady-state temperature of inflowing liquid, °C

$\bar{\Theta}_o$ = steady-state temperature of outflowing liquid, °C

G = steady-state liquid flow rate, kg/sec

M = mass of liquid in tank, kg

c = specific heat of liquid, kcal/kg °C

R = thermal resistance, °C sec/kcal

C = thermal capacitance, kcal/°C

$\bar{H}$ = steady-state heat input rate, kcal/sec

Assume that the temperature of the inflowing liquid is kept constant and that the heat input rate to the system (heat supplied by the heater) is suddenly changed from $\bar{H}$ to $\bar{H} + h_i$, where h_i represents a small change in the heat input rate. The heat outflow rate will then change gradually from $\bar{H}$ to $\bar{H} + h_o$. The temperature of the outflowing liquid will also be changed from $\bar{\Theta}_o$ to $\bar{\Theta}_o + \theta$ For this case, h_o, C, and R are obtained, respectively, as

$$h_o = Gc\theta$$

$$C = Mc$$

$$R = \frac{\theta}{h_o} = \frac{1}{Gc}$$

The heat balance equation for this system is

$$Cd\theta = (h_i - h_o)\,dt$$

or

$$C\frac{d\theta}{dt} = h_i - h_o$$

PETITIONER'S EXHIBIT 1002
US PATENT NO. 6,581,565
Page 9989

which may be rewritten as

$$RC\frac{d\theta}{dt} + \theta = Rh_i$$

Note that the time constant of the system is equal to RC or M/G seconds. The transfer function relating θ and h_i is given by

$$\frac{\Theta(s)}{H_i(s)} = \frac{R}{RCs + 1}$$

where $\Theta(s) = \mathscr{L}[\theta(t)]$ and $H_i(s) = \mathscr{L}[h_i(t)]$.

In practice, the temperature of the inflowing liquid may fluctuate and may act as a load disturbance. (If a constant outflow temperature is desired, an automatic controller may be installed to adjust the heat inflow rate to compensate for the fluctuations in the temperature of the inflowing liquid.) If the temperature of the inflowing liquid is suddenly changed from $\bar{\Theta}_i$ to $\bar{\Theta}_i + \theta_i$ while the heat input rate H and the liquid flow rate G are kept constant, then the heat outflow rate will be changed from $\bar{H}$ to $\bar{H} + h_o$, and the temperature of the outflowing liquid will be changed from $\bar{\Theta}_o$ to $\bar{\Theta}_o + \theta$. The heat balance equation for this case is

$$C\,d\theta = (Gc\theta_i - h_o)\,dt$$

or

$$C\frac{d\theta}{dt} = Gc\theta_i - h_o$$

which may be rewritten

$$RC\frac{d\theta}{dt} + \theta = \theta_i$$

The transfer function relating θ and θ_i is given by

$$\frac{\Theta(s)}{\Theta_i(s)} = \frac{1}{RCs + 1}$$

where $\Theta(s) = \mathscr{L}[\theta(t)]$ and $\Theta_i(s) = \mathscr{L}[\theta_i(t)]$.

If the present thermal system is subjected to changes in both the temperature of the inflowing liquid and the heat input rate, while the liquid flow rate is kept constant, the change θ in the temperature of the outflowing liquid can be given by the following equation:

$$RC\frac{d\theta}{dt} + \theta = \theta_i + Rh_i$$

A block diagram corresponding to this case is shown in Figure 4–26(b). Notice that the system involves two inputs.

PETITIONER'S EXHIBIT 1002
US PATENT NO. 6,581,565
Page 9990

EXAMPLE PROBLEMS AND SOLUTIONS

A–4–1. In the liquid-level system of Figure 4–27 assume that the outflow rate Q m^3/sec through the outflow valve is related to the head H m by

$$Q = K\sqrt{H} = 0.01\sqrt{H}$$

Assume also that when the inflow rate Q_i is 0.015 m^3/sec the head stays constant. For $t < 0$ the system is at steady state $(Q_i = 0.015 \text{ m}^3/\text{sec})$. At $t = 0$ the inflow valve is closed and so there is no inflow for $t \geq 0$. Find the time necessary to empty the tank to half the original head. The capacitance C of the tank is 2 m^2.

Solution. When the head is stationary, the inflow rate equals the outflow rate. Thus head H_o at $t = 0$ is obtained from

$$0.015 = 0.01\sqrt{H_o}$$

or

$$H_o = 2.25 \text{ m}$$

The equation for the system for $t > 0$ is

$$-C\,dH = Q\,dt$$

or

$$\frac{dH}{dt} = -\frac{Q}{C} = \frac{-0.01\sqrt{H}}{2}$$

Hence

$$\frac{dH}{\sqrt{H}} = -0.005\,dt$$

Assume that, at $t = t_1$, $H = 1.125$ m. Integrating both sides of this last equation, we obtain

$$\int_{2.25}^{1.125} \frac{dH}{\sqrt{H}} = \int_0^{t_1} (-0.005)\,dt = -0.005t_1$$

It follows that

$$2\sqrt{H}\Big|_{2.25}^{1.125} = 2\sqrt{1.125} - 2\sqrt{2.25} = -0.005t_1$$

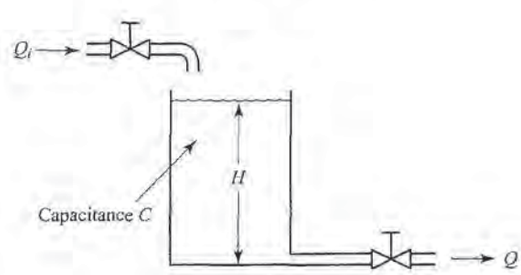

Figure 4–27
Liquid-level system.

PETITIONER'S EXHIBIT 1002
US PATENT NO. 6,581,565
Page 9991

or

$$t_1 = 175.7$$

Thus, the head becomes half the original value (2.25 m) in 175.7 sec.

A–4–2. Consider the liquid-level system shown in Figure 4–28. At steady state, the inflow rate and outflow rate are both $\bar{Q}$ and the flow rate between the tanks is zero. The heads of tanks 1 and 2 are both $\bar{H}$. At $t = 0$, the inflow rate is changed from $\bar{Q}$ to $\bar{Q} + q$, where q is a small change in the inflow rate. The resulting changes in the heads (h_1 and h_2) and flow rates (q_1 and q_2) are assumed to be small. The capacitances of tanks 1 and 2 are C_1 and C_2, respectively. The resistance of the valve between the tanks is R_1 and that of the outflow valve is R_2.

Derive mathematical models for the system when (a) q is the input and h_2 the output, (b) q is the input and q_2 the output, and (c) q is the input and h_1 the output.

Solution. (a) For tank 1, we have

$$C_1\, dh_1 = q_1\, dt$$

where

$$q_1 = \frac{h_2 - h_1}{R_1}$$

Consequently,

$$R_1 C_1 \frac{dh_1}{dt} + h_1 = h_2 \tag{4–32}$$

For tank 2, we get

$$C_2\, dh_2 = (q - q_1 - q_2)\, dt$$

where

$$q_1 = \frac{h_2 - h_1}{R_1}, \qquad q_2 = \frac{h_2}{R_2}$$

It follows that

$$R_2 C_2 \frac{dh_2}{dt} + \frac{R_2}{R_1} h_2 + h_2 = R_2 q + \frac{R_2}{R_1} h_1 \tag{4–33}$$

By eliminating h_1 from Equations (4–32) and (4–33), we have

$$R_1 C_1 R_2 C_2 \frac{d^2 h_2}{dt^2} + (R_1 C_1 + R_2 C_2 + R_2 C_1) \frac{dh_2}{dt} + h_2 = R_1 R_2 C_1 \frac{dq}{dt} + R_2 q \tag{4–34}$$

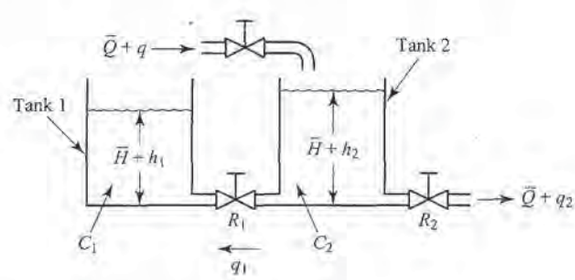

Figure 4–28
Liquid-level system.

PETITIONER'S EXHIBIT 1002
US PATENT NO. 6,581,565
Page 9992

In terms of the transfer function, we have

$$\frac{H_2(s)}{Q(s)} = \frac{R_2(R_1C_1s + 1)}{R_1C_1R_2C_2s^2 + (R_1C_1 + R_2C_2 + R_2C_1)s + 1}$$

This is the desired mathematical model in which q is considered the input and h_2 is the output.
(b) Substitution of $h_2 = R_2q_2$ into Equation (4–34) gives

$$R_1C_1R_2C_2\frac{d^2q_2}{dt^2} + (R_1C_1 + R_2C_2 + R_2C_1)\frac{dq_2}{dt} + q_2 = R_1C_1\frac{dq}{dt} + q$$

This equation is a mathematical model of the system when q is considered the input and q_2 is the output. In terms of the transfer function, we obtain

$$\frac{Q_2(s)}{Q(s)} = \frac{R_1C_1s + 1}{R_1C_1R_2C_2s^2 + (R_1C_1 + R_2C_2 + R_2C_1)s + 1}$$

(c) Elimination of h_2 from Equations (4–32) and (4–33), yields

$$R_1C_1R_2C_2\frac{d^2h_1}{dt^2} + (R_1C_1 + R_2C_2 + R_2C_1)\frac{dh_1}{dt} + h_1 = R_2q$$

which is a mathematical model of the system in which q is considered the input and h_1 is the output. In terms of the transfer function, we get

$$\frac{H_1(s)}{Q(s)} = \frac{R_2}{R_1C_1R_2C_2s^2 + (R_1C_1 + R_2C_2 + R_2C_1)s + 1}$$

A–4–3. Consider the liquid-level system shown in Figure 4–29. In the system, $\bar{Q}_1$ and $\bar{Q}_2$ are steady-state inflow rates and $\bar{H}_1$ and $\bar{H}_2$ are steady-state heads. The quantities $q_{i1}, q_{i2}, h_1, h_2, q_1$, and q_o are considered small. Obtain a state-space representation for the system when h_1 and h_2 are the outputs and q_{i1} and q_{i2} are the inputs.

Solution. The equations for the system are

$$C_1\,dh_1 = (q_{i1} - q_1)\,dt \tag{4–35}$$

$$\frac{h_1 - h_2}{R_1} = q_1 \tag{4–36}$$

$$C_2\,dh_2 = (q_1 + q_{i2} - q_o)\,dt \tag{4–37}$$

$$\frac{h_2}{R_2} = q_o \tag{4–38}$$

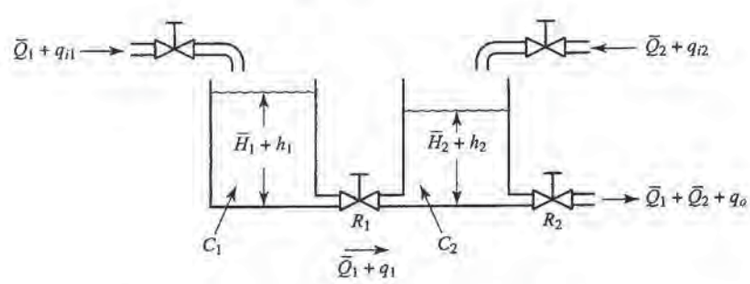

Figure 4–29
Liquid-level system.

PETITIONER'S EXHIBIT 1002
US PATENT NO. 6,581,565
Page 9993

Elimination of q_1 from Equation (4–35) using Equation (4–36) results in

$$\frac{dh_1}{dt} = \frac{1}{C_1}\left(q_{i1} - \frac{h_1 - h_2}{R_1}\right) \tag{4–39}$$

Eliminating q_1 and q_o from Equation (4–37) by using Equations (4–36) and (4–38) gives

$$\frac{dh_2}{dt} = \frac{1}{C_2}\left(\frac{h_1 - h_2}{R_1} + q_{i2} - \frac{h_2}{R_2}\right) \tag{4–40}$$

Define state variables x_1 and x_2 by

$$x_1 = h_1$$
$$x_2 = h_2$$

the input variables u_1 and u_2 by

$$u_1 = q_{i1}$$
$$u_2 = q_{i2}$$

and the output variables y_1 and y_2 by

$$y_1 = h_1 = x_1$$
$$y_2 = h_2 = x_2$$

Then Equations (4–39) and (4–40) can be written as

$$\dot{x}_1 = -\frac{1}{R_1C_1}x_1 + \frac{1}{R_1C_1}x_2 + \frac{1}{C_1}u_1$$
$$\dot{x}_2 = \frac{1}{R_1C_2}x_1 - \left(\frac{1}{R_1C_2} + \frac{1}{R_2C_2}\right)x_2 + \frac{1}{C_2}u_2$$

In the form of the standard vector-matrix representation, we have

$$\begin{bmatrix} \dot{x}_1 \\ \dot{x}_2 \end{bmatrix} = \begin{bmatrix} -\dfrac{1}{R_1C_1} & \dfrac{1}{R_1C_1} \\ \dfrac{1}{R_1C_2} & -\left(\dfrac{1}{R_1C_2} + \dfrac{1}{R_2C_2}\right) \end{bmatrix} \begin{bmatrix} x_1 \\ x_2 \end{bmatrix} + \begin{bmatrix} \dfrac{1}{C_1} & 0 \\ 0 & \dfrac{1}{C_2} \end{bmatrix} \begin{bmatrix} u_1 \\ u_2 \end{bmatrix}$$

which is the state equation, and

$$\begin{bmatrix} y_1 \\ y_2 \end{bmatrix} = \begin{bmatrix} 1 & 0 \\ 0 & 1 \end{bmatrix} \begin{bmatrix} x_1 \\ x_2 \end{bmatrix}$$

which is the output equation.

PETITIONER'S EXHIBIT 1002
US PATENT NO. 6,581,565
Page 9994

A–4–4. Consider the liquid-level system shown in Figure 4–30. At steady state the inflow rate is $Q_i = \bar{Q}$, the outflow rate is $Q_o = \bar{Q}$, and head is $H = \bar{H}$. If the flow is turbulent, then we have

$$\bar{Q} = K\sqrt{\bar{H}}$$

Assume that at $t = 0$ the inflow rate is changed from $Q_i = \bar{Q}$ to $Q_i = \bar{Q} + q_i$. This change causes the head to change from $H = \bar{H}$ to $H = \bar{H} + h$, which, in turn, causes the outflow rate to change from $Q_o = \bar{Q}$ to $Q_o = \bar{Q} + q_o$. For this system we have

$$C\frac{dH}{dt} = Q_i - Q_o = Q_i - K\sqrt{H}$$

where C is the capacitance of the tank. Let us define

$$\frac{dH}{dt} = f(H, Q_i) = \frac{1}{C}Q_i - \frac{K\sqrt{H}}{C} \tag{4–41}$$

Note that the steady-state operating condition is $(\bar{H}, \bar{Q})$ and $H = \bar{H} + h$, $Q_i = \bar{Q} + q_i$. Since at steady-state operation $dH/dt = 0$, we have $f(\bar{H}, \bar{Q}) = 0$.

Linearize Equation (4–41) near the operating point $(\bar{H}, \bar{Q})$.

Solution. Using the linearization technique presented in Section 3–10, a linearized equation for Equation (4–41) can be obtained as follows:

$$\frac{dH}{dt} - f(\bar{H}, \bar{Q}) = \frac{\partial f}{\partial H}(H - \bar{H}) + \frac{\partial f}{\partial Q_i}(Q_i - \bar{Q}) \tag{4–42}$$

where

$$f(\bar{H}, \bar{Q}) = 0$$

$$\left.\frac{\partial f}{\partial H}\right|_{H=\bar{H},\, Q_i=\bar{Q}} = -\frac{K}{2C\sqrt{\bar{H}}} = -\frac{\bar{Q}}{\sqrt{\bar{H}}}\frac{1}{2C\sqrt{\bar{H}}} = -\frac{\bar{Q}}{2C\bar{H}} = -\frac{1}{RC}$$

where we used the resistance R defined by

$$R = \frac{2\bar{H}}{\bar{Q}}$$

Also,

$$\left.\frac{\partial f}{\partial Q_i}\right|_{H=\bar{H},\, Q_i=\bar{Q}} = \frac{1}{C}$$

Then Equation (4–42) can be written as

$$\frac{dH}{dt} = -\frac{1}{RC}(H - \bar{H}) + \frac{1}{C}(Q_i - \bar{Q}) \tag{4–43}$$

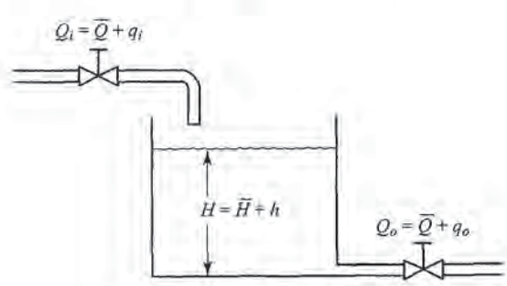

Figure 4–30
Liquid-level system.

PETITIONER'S EXHIBIT 1002
US PATENT NO. 6,581,565
Page 9995

Since $H - \bar{H} = h$ and $Q_i - \bar{Q} = q_i$, Equation (4–43) can be written as

$$\frac{dh}{dt} = -\frac{1}{RC}h + \frac{1}{C}q_i$$

or

$$RC\frac{dh}{dt} + h = Rq_i$$

which is the linearized equation for the liquid-level system and is the same as Equation (4–2) that we obtained in Section 4–2.

A–4–5. The value of the gas constant for any gas may be determined from accurate experimental observations of simultaneous values of p, v, and T.

Obtain the gas constant R_{air} for air. Note that at 32°F and 14.7 psia the specific volume of air is 12.39 ft^3/lb. Then obtain the capacitance of a 20-ft^3 pressure vessel that contains air at 160°F. Assume that the expansion process is isothermal.

Solution.

$$R_{air} = \frac{pv}{T} = \frac{14.7 \times 144 \times 12.39}{460 + 32} = 53.3 \text{ ft-lb}_f/\text{lb°R}$$

Referring to Equation (4–12), the capacitance of a 20-ft^3 pressure vessel is

$$C = \frac{V}{nR_{air}T} = \frac{20}{1 \times 53.3 \times 620} = 6.05 \times 10^{-4}\frac{\text{lb}}{\text{lb}_f/\text{ft}^2}$$

Note that in terms of SI units, R_{air} is given by

$$R_{air} = 287 \text{ N-m/kg K}$$

A–4–6. In the pneumatic pressure system of Figure 4–31(a), assume that, for $t < 0$, the system is at steady state and that the pressure of the entire system is $\bar{P}$. Also, assume that the two bellows are identical. At $t = 0$, the input pressure is changed from $\bar{P}$ to $\bar{P} + p_i$. Then the pressures in bellows 1 and 2 will change from $\bar{P}$ to $\bar{P} + p_1$ and from $\bar{P}$ to $\bar{P} + p_2$, respectively. The capacity (volume) of each bellows is 5×10^{-4} m^3, and the operating pressure difference Δp (difference between p_i and p_1 or difference between p_i and p_2) is between -0.5×10^5 N/m^2 and 0.5×10^5 N/m^2. The

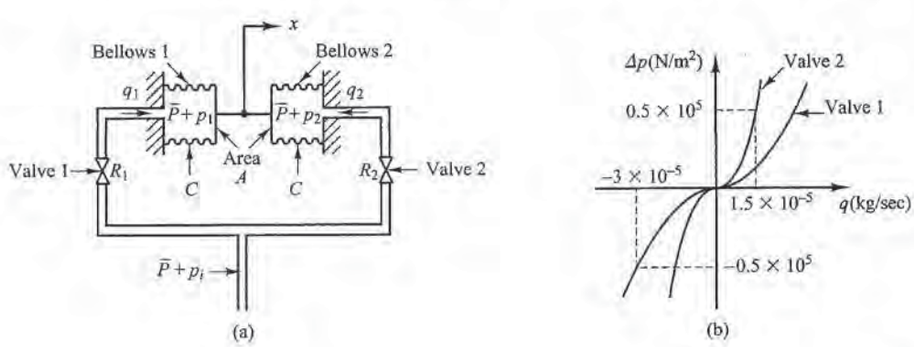

Figure 4–31
(a) Pneumatic pressure system; (b) pressure difference versus mass flow rate curves.

PETITIONER'S EXHIBIT 1002
US PATENT NO. 6,581,565
Page 9996

corresponding mass flow rates (kg/sec) through the valves are shown in Figure 4–31(b). Assume that the bellows expand or contract linearly with the air pressures applied to them, that the equivalent spring constant of the bellows system is $k = 1 \times 10^5$ N/m, and that each bellows has area $A = 15 \times 10^{-4}$ m^2.

Defining the displacement of the midpoint of the rod that connects two bellows as x, find the transfer function $X(s)/P_i(s)$. Assume that the expansion process is isothermal and that the temperature of the entire system stays at 30°C.

Solution. Referring to Section 4–3, transfer function $P_1(s)/P_i(s)$ can be obtained as

$$\frac{P_1(s)}{P_i(s)} = \frac{1}{R_1Cs + 1} \tag{4–44}$$

Similarly, transfer function $P_2(s)/P_i(s)$ is

$$\frac{P_2(s)}{P_i(s)} = \frac{1}{R_2Cs + 1} \tag{4–45}$$

The force acting on bellows 1 in the x direction is $A(\bar{P} + p_1)$, and the force acting on bellows 2 in the negative x direction is $A(\bar{P} + p_2)$. The resultant force balances with kx, the equivalent spring force of the corrugated sides of the bellows.

$$A(p_1 - p_2) = kx$$

or

$$A[P_1(s) - P_2(s)] = kX(s) \tag{4–46}$$

Referring to Equations (4–44) and (4–45), we see that

$$\begin{aligned} P_1(s) - P_2(s) &= \left(\frac{1}{R_1Cs + 1} - \frac{1}{R_2Cs + 1}\right)P_i(s) \\ &= \frac{R_2Cs - R_1Cs}{(R_1Cs + 1)(R_2Cs + 1)}P_i(s) \end{aligned}$$

By substituting this last equation into Equation (4–46) and rewriting, the transfer function $X(s)/P_i(s)$ is obtained as

$$\frac{X(s)}{P_i(s)} = \frac{A}{k}\frac{(R_2C - R_1C)s}{(R_1Cs + 1)(R_2Cs + 1)} \tag{4–47}$$

The numerical values of average resistances R_1 and R_2 are

$$R_1 = \frac{d\,\Delta p}{dq_1} = \frac{0.5 \times 10^5}{3 \times 10^{-5}} = 0.167 \times 10^{10}\,\frac{\text{N/m}^2}{\text{kg/sec}}$$

$$R_2 = \frac{d\,\Delta p}{dq_2} = \frac{0.5 \times 10^5}{1.5 \times 10^{-5}} = 0.333 \times 10^{10}\,\frac{\text{N/m}^2}{\text{kg/sec}}$$

The numerical value of capacitance C of each bellows is

$$C = \frac{V}{nR_{\text{air}}T} = \frac{5 \times 10^{-4}}{1 \times 287 \times (273 + 30)} = 5.75 \times 10^{-9}\,\frac{\text{kg}}{\text{N/m}^2}$$

PETITIONER'S EXHIBIT 1002
US PATENT NO. 6,581,565
Page 9997

where R_{air} = 287 N-m/kg K. (See Problem **A–4–5**.) Consequently,

$$R_1C = 0.167 \times 10^{10} \times 5.75 \times 10^{-9} = 9.60 \text{ sec}$$

$$R_2C = 0.333 \times 10^{10} \times 5.75 \times 10^{-9} = 19.2 \text{ sec}$$

By substituting the numerical values for A, k, R_1C, and R_2C into Equation (4–47), we obtain

$$\frac{X(s)}{P_i(s)} = \frac{1.44 \times 10^{-7}s}{(9.6s + 1)(19.2s + 1)}$$

A–4–7. Draw a block diagram of the pneumatic controller shown in Figure 4–32. Then derive the transfer function of this controller. Assume that $R_d \ll R_i$.

If the resistance R_d is removed (replaced by the line-sized tubing), what control action do we get? If the resistance R_i is removed (replaced by the line-sized tubing), what control action do we get?

Solution. Let us assume that when $e = 0$ the nozzle-flapper distance is equal to $\bar{X}$ and the control pressure is equal to $\bar{P}_c$. In the present analysis, we shall assume small deviations from the respective reference values as follows:

e = small error signal

x = small change in the nozzle-flapper distance

p_c = small change in the control pressure

p_I = small pressure change in bellows I due to small change in the control pressure

p_{II} = small pressure change in bellows II due to small change in the control pressure

y = small displacement at the lower end of the flapper

In this controller, p_c is transmitted to bellows I through the resistance R_d. Similarly, p_c is transmitted to bellows II through the series of resistances R_d and R_i. The relationship between p_I and p_c is

$$\frac{P_I(s)}{P_c(s)} = \frac{1}{R_dCs + 1} = \frac{1}{T_ds + 1}$$

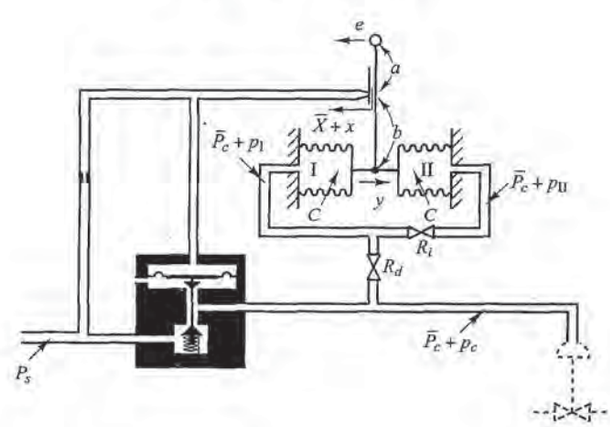

Figure 4–32
Schematic diagram of a pneumatic controller.

PETITIONER'S EXHIBIT 1002
US PATENT NO. 6,581,565
Page 9998

where $T_d = R_dC$ = derivative time. Similarly, p_{II} and p_I are related by the transfer function

$$\frac{P_{II}(s)}{P_I(s)} = \frac{1}{R_iCs + 1} = \frac{1}{T_is + 1}$$

where $T_i = R_iC$ = integral time. The force-balance equation for the two bellows is

$$(p_I - p_{II})A = k_s y$$

where k_s is the stiffness of the two connected bellows and A is the cross-sectional area of the bellows. The relationship among the variables e, x, and y is

$$x = \frac{b}{a + b}e - \frac{a}{a + b}y$$

The relationship between p_c and x is

$$p_c = Kx \qquad (K > 0)$$

From the equations just derived, a block diagram of the controller can be drawn, as shown in Figure 4–33(a). Simplification of this block diagram results in Figure 4–33(b).

The transfer function between $P_c(s)$ and $E(s)$ is

$$\frac{P_c(s)}{E(s)} = \frac{\dfrac{b}{a + b}K}{1 + K\dfrac{a}{a + b}\dfrac{A}{k_s}\left(\dfrac{T_is}{T_is + 1}\right)\left(\dfrac{1}{T_ds + 1}\right)}$$

For a practical controller, under normal operation $|KaAT_is/[(a + b)k_s(T_is + 1)(T_ds + 1)]|$ is very much greater than unity and $T_i \gg T_d$. Therefore, the transfer function can be simplified as follows:

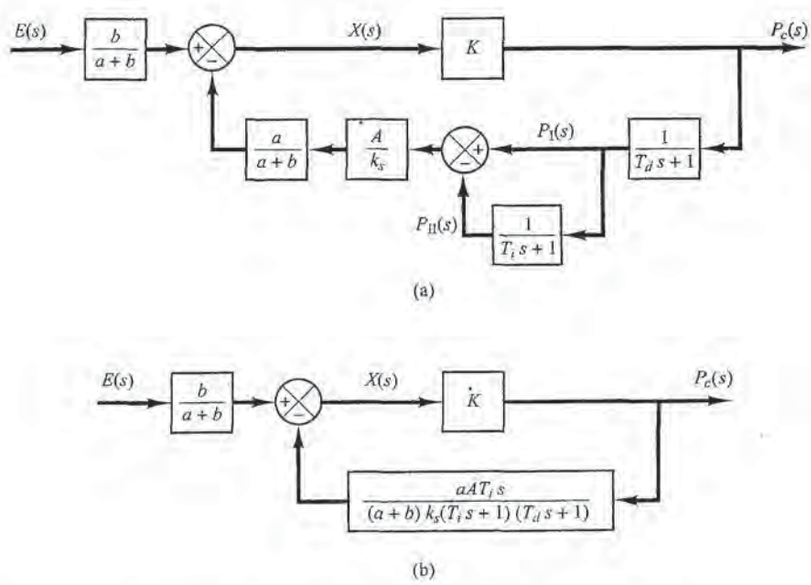

Figure 4–33
(a) Block diagram of the pneumatic controller shown in Figure 4–32;
(b) simplified block diagram.

PETITIONER'S EXHIBIT 1002
US PATENT NO. 6,581,565
Page 9999

$$\frac{P_c(s)}{E(s)} \doteq \frac{bk_s(T_i s + 1)(T_d s + 1)}{aAT_i s}$$
$$= \frac{bk_s}{aA}\left(\frac{T_i + T_d}{T_i} + \frac{1}{T_i s} + T_d s\right)$$
$$\doteq K_p\left(1 + \frac{1}{T_i s} + T_d s\right)$$

where

$$K_p = \frac{bk_s}{aA}$$

Thus the controller shown in Figure 4–32 is a proportional-plus-integral-plus-derivative one.

If the resistance R_d is removed, or $R_d = 0$, the action becomes that of a proportional-plus-integral controller.

If the resistance R_i is removed, or $R_i = 0$, the action becomes that of a narrow-band proportional, or two-position, controller. (Note that the actions of two feedback bellows cancel each other, and there is no feedback.)

A–4–8. Actual spool valves are either overlapped or underlapped because of manufacturing tolerances. Consider the overlapped and underlapped spool valves shown in Figures 4–34(a) and (b). Sketch curves relating the uncovered port area A versus displacement x.

Solution. For the overlapped valve, a dead zone exists between $-\frac{1}{2}x_0$ and $\frac{1}{2}x_0$, or $-\frac{1}{2}x_0 < x < \frac{1}{2}x_0$. The uncovered port area A versus displacement x curve is shown in Figure 4–35(a). Such an overlapped valve is unfit as a control valve.

For the underlapped valve, the port area A versus displacement x curve is shown in Figure 4–35(b). The effective curve for the underlapped region has a higher slope, meaning a higher sensitivity. Valves used for controls are usually underlapped.

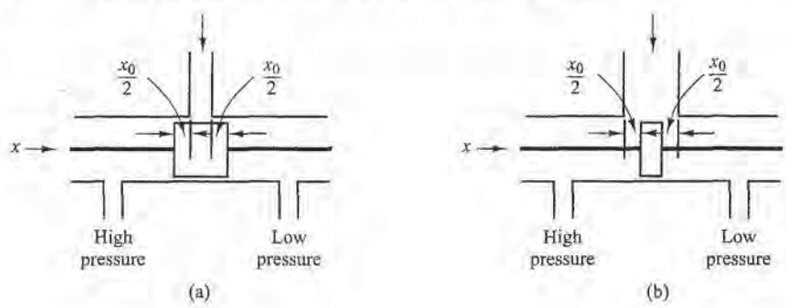

Figure 4–34
(a) Overlapped spool valve;
(b) underlapped spool valve.

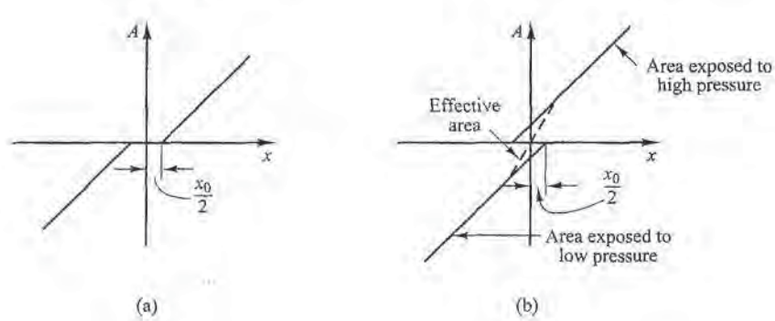

Figure 4–35
(a) Uncovered port area A versus displacement x curve for the overlapped valve; (b) uncovered port area A versus displacement x curve for the underlapped valve.

PETITIONER'S EXHIBIT 1002
US PATENT NO. 6,581,565
Page 10000