In step 1812, the TOTALGV variable, which is the total pixel level, is compared to the threshold total pixel level for headlamps as determined from the appropriate look-up table. If this variable is greater than the threshold, the value is compared to the threshold multiplied by a bright multiplier in step 1813. If TOTALGV is greater than this value, the light source is determined to be a bright headlamp in step 1815. If not the light source is a headlamp as indicated in step 1814. The need to distinguish between headlamps and bright headlamps will become clearer in the discussion of the control state of the headlamps. As an alternative to comparing TOTALGV to a threshold times a bright multiplier, yet another look-up table can be provided to dictate thresholds for bright headlamps.

A procedure similar to that just described is performed in step 1816 if the light source is determined to be red. A series of lookup tables are provided for tail light thresholds and the appropriate lookup table is used to determine the threshold for the given light source location. In 1817, the total pixel level for tail light threshold is compared to the TOTALGV variable to determine to light sources bright enough to be of interest. If so, the light source is labeled as a tail light in step 1819. If not, the light source is ignored in step 1820.

Should the cyan lens element 301 be replaced by a clear lens, a different ratio threshold is used in step 1810. In this case, a red light will have approximately the same brightness in both images, but a white or other color light will be substantially brighter when imaged through the clear lens. This ratio is determined based on the analog gain settings for both the red and cyan (or clear) images.

Once the images of the forward field have been acquired and analyzed in step 1405, the state of the headlamps must be determined in step 1406. This is best described by considering a state machine implemented in the microcontroller 1105, which state machine is illustrated in Fig. 19. In the following example it is assumed that headlamp drive 902 is a pulse width modulator drive and the high beam brightness can be varied by changing the duty cycle of the pulse width modulator drive. It is also assumed that the low beam headlamps remain on at 100% duty cycle at all times. Each of the states in Fig. 19 represents a control state of the high beam headlamps. The duty cycle of the high beam headlamps is set to the value indicated by the current control state. The distribution of the duty cycles amongst the control states is non-linear to compensate for the fact that headlamp brightness is a non-linear function of duty cycle and to provide the appearance of a constant percent change from cycle to cycle. Also, there are several states for both

0% and 100% duty cycle, indicating that several states must be traversed before the headlamps begin to go ON or OFF, providing a time delay verification insuring that the detected light source is persistent over several images. The number of states is exemplary only, and those skilled of the art will recognize that it may vary depending on the desired fade ON and OFF rate of the high beams and time between cycles. Additionally, the bright light indicator (which is typically located on the vehicle's dashboard) fades ON as the state moves from state 11 to state 14. The bright light indicator fades OFF as the states move from state 7 to state 4. This provides some hysteresis to avoid flashing the indicator ON and OFF. Alternatively, if the indicator does not fade ON and OFF, the state at which the bright light indicator turns ON will preferably be a higher state than the state at which the bright light indicator turns OFF. In either case, hysterisis is provided for the headlamp control.

After each control cycle, the headlamp control state can remain the same or move to a different state. The rules for moving between states are described with reference to Fig. 20. First, if any of the lights in the light list were determined to have been extremely bright lights in step 2001, the current control state is immediately set to a 0 state in step 2002. This behavior allows bypass of the fade out feature and rapid response to the sudden appearance of headlamps in the forward field of view, such as happens when driving over a hill. Step 2003 determines whether a headlamp or tail light was detected in the light source list. If not, control proceeds to step 2004, wherein it is determined whether the previous state was decremented in the last control cycle.

One of the advantages of the variable beam configuration is the ability to fade in and out high beams. If a reflection from a sign or reflector is misdiagnosed as a vehicle lamp, the high beams will begin to dim. When they do, the reflected source will no longer be present in the image and the high beams will fade back on, likely without bothering the driver. To prevent rapid oscillation between increasing and decreasing headlamp beam brightness, the control state must rest in the current state for one cycle before changing direction. Therefore, step 2004 considers the action during the previous cycle and the system will remain in the current state as indicated in step 2005 if the previous action was to decrement states.

If the action during the previous cycle was not to decrement states, vehicle speed is considered next in step 2006. If a vehicle is stopped at an intersection, it will annoy the driver if the high beams come ON, dim with a passing car, and then come ON again. To prevent this, the high beams are prevented from coming ON if a vehicle is traveling below

a certain speed, for example 20-mph. A decrease in speed below the minimum speed threshold will not necessarily cause the high beams to dim unless there is an oncoming or preceding car present. Alternatively, the high beams can be configured to fade OFF every time the vehicle comes to a stop and then fade ON again once the vehicle begins moving, provided no other vehicles are present. In step 2007, the number of lights in the light list (counted in step 1607) is checked as an indication of whether the driver is driving in city conditions. If there are a large number of lights in the forward field of view, the high beams will not be turned ON. The number of the lights that are alternating current sources may also be considered.

If the criteria of steps 2004, 2006, and 2007 are met, the current control state is incremented one state in step 2008. If this action results in the current control state exceeding state 12 as determined in step 2009, the current control state is set to 15 in step 2010 forcing several time verification states before the beams can be dimmed again.

Should the microcontroller 1105 detect a headlamp or tail light in step 2003, the microcontroller determines whether a bright headlamp was detected in step 2011. If not, the prior cycle action is considered in step 2012 to prevent rapid oscillation between incrementing and decrementing to avoid rapid ongoing oscillations between states. If the prior action was not to increment, the current control state is decremented by 1 state in step 2014. If the new control state is below state 3, as determined in step 2015, the current control state is set to 0 in step 2016.

Finally, if a bright headlamp is detected in step 2011, it is desirable to more rapidly fade out the high beams by decrementing 2 states in step 2018, provided the previous action was not to increment in step 2017, in which case the current state is decremented only one state.

A large number of variations of the scheme just described are possible. For example, more states can be added to increase or decrease the time it takes to fade the high beams in and out. The number of required states will depend upon the image acquisition and analysis cycle time. Ideally, the fade in/out period is about one to two seconds. Another alternative is to decrement states as a function of the brightest light source detected in the light list rather than to decrement a single state for every cycle. In this way, the brightness of the high beam is adjusted as a function of the distance of an oncoming or preceding vehicle rather than just fading in and out. This is particularly advantageous where the control mechanism is to vary the beam angle of the high beams rather than the intensity of the beams. Yet another alternative is to decrement states as a

function of the current speed of the controlled vehicle. The rate at which states are decremented could increase at high vehicle speeds, since oncoming cars will overtake the controlled vehicle at a more rapid rate. Yet another alternative is to decrement states as a vehicle slows down. This would allow the high beams to fade out as a vehicle comes to a stop: a feature that may be desirable for some drivers. Finally, it should be noted that the use of discrete states is only exemplary. The intensity and/or aim of the high beam headlamps can be controlled by continuum of values from fully ON to fully OFF.

The previous discussions described in detail the operation of one cycle of the headlamp dimmer control sequence. This sequence is repeated indefinitely as long as the device is on. Depending on the time to complete one cycle, the above procedure may be interrupted to acquire rear glare sensor measurements for the electrochromic mirror. Additionally, the driver may interrupt the above sequence by activating the manual high beam switch generating input signal 1123 (Fig. 11). This feature is necessary to allow the driver to override improper behavior of the control system or to use the high beams to alert other drivers through flashing the high beams.

Some additional features may be provided with the above-described hardware and software configuration. One such feature is daytime running lights (DRLs). On some vehicles, DRLs are provided by operating the high beams at a reduced intensity. By using the PWM drive circuitry provided, the high beams can be set to a reduced intensity during daylight conditions. The ambient light sensor 1107 can be used to determine daylight conditions and switch the headlamps to normal low beam operation at dusk. In particular, the ambient light level can have one or more light level thresholds associated therewith. When the ambient light level is a daytime one threshold, the daytime running lights will be ON. Below that threshold, but above another lower threshold, the low beams can be ON. Below that lower bright activate ambient light level threshold, the high beams may be operated automatically if the driver does not manually disable high beam operation.

Even without the use of DRLs, it is desirable to have automatic activation of the low beam headlamps at dusk. This control can be provided by the use of the ambient light sensor 1107. For better performance, an additional light sensor can be provided which senses light from a direction upwards rather than looking straightforward as the ambient light sensor 1107 does. Such a sky sensor arrangement is disclosed in U.S. Patent Application No. 09/491,192, entitled VEHICLE EQUIPMENT CONTROL WITH SEMICONDUCTOR LIGHT SENSORS, filed by Jon Bechtel et al. on January 25, 2000. Alternatively, a few rows of pixels in the image sensor can be used to image a region of

the sky above the horizon. An imaging system disclosing such an arrangement is described in U.S. Patent No. 6,130,421. The ability to image through both the red and cyan filters can help to distinguish between clear and overcast conditions and to detect a sunset.

It is envisioned that the system can detect a tunnel using the image sensor and a sky sensor. In particular, a potential tunnel condition is detected when a large area of contiguous dark pixels is detected that meets a size threshold level and is located in the center of the image, under daytime ambient light conditions. If the dark area grows while the ambient light conditions continue to sense day ambient light conditions, the potential tunnel condition will continue. If the image sensor continues to see a large dark area forward of the vehicle when the daylight ambient conditions are no longer detected, the vehicle will be determined to be in a tunnel, and the headlamps will be ON. The headlamps will remain on until the daylight ambient conditions are detected, at which time the headlamps will be turned OFF and daylight running lights will be turned ON if the controlled vehicle has daytime running lights.

SPEED VARYING THRESHOLDS

The speed input 1117 can be used in additional ways by microcontroller 1115. For example, when driving on an expressway, it is necessary to detect oncoming cars in the opposite lane, which is usually separated by a median. Therefore, the microcontroller must be more sensitive to oncoming headlamps at larger angles than would be necessary for back-road driving where there is no median separating oncoming traffic. Incorporating a wide field of view for back-road driving has the disadvantage of increasing the likelihood that the image sensor will detect house lights, which are typically incandescent. Incandescent light sources will not be filtered by the AC rejection algorithm. Such house lights are not typically present on the side of the freeway. By increasing the sensitivity of the device to objects at higher angles when the vehicle is traveling at higher speeds, such as speeds in excess of 50 to 60 mph, the system will be able to sense cross-median traffic on expressways without increased sensitivity to house lights on back roads. It is envisioned that the field of view could be increased when the vehicle speed exceeds 65 mph and decreased when the vehicle speed passes below 60 mph.

In particular, it is envisioned that prior to step 1601, additional steps can be provided to make the field of view speed sensitive. These steps are illustrated in Fig. 21. The vehicle speed is input in step 2101. The microcontroller determines in step 2103 whether the status is currently a wide view for expressway driving. If it is not, the

microcontroller 1105 determines whether the speed is greater than 55 mph. If not, the status does not change. If the vehicle speed is determined to be greater than 55 mph in step 2105, the field of view of the image sensor 201 is increased as indicated in step 2107. The field of view in the horizontal direction can be increased by 30 to 150 percent, and advantageously 60 to 125 percent, relative to the narrower field of view at lower speeds. If it was determined in step 2101 that the controlled vehicle 100 is in the expressway state, the microcontroller 1105 determines in step 2109 whether the vehicle speed has dropped below 45 mph. If it has, the microcontroller reduces the field of view of image sensor 201 to its narrower non-expressway field of view. In one advantageous embodiment, the field of view remains the same at all speeds but the thresholds for responding to lights at higher angles are decreased as speed increases. This is advantageous because it allows detection of very bright objects at high angles when the vehicle is traveling at slow speeds, but it is not sensitive to less bright objects, such as house lights or street signs, when traveling at slow speeds. In particular, at high speeds reducing the thresholds increases the sensitivity to cross-median traffic. The thresholds are reduced more significantly to the left than to the right since cross median traffic is to the left. This property can be reversed for left-hand-drive countries.

It is envisioned that the field of view will be varied by increasing and decreasing the width of the pixels used by the image sensor in the manner described above when the high beams are ON or OFF.

According to another aspect of the invention, the integration time for the pixels of the image array sensor can be increased at higher speeds. This increase in integration period increases the sensitivity of the image array sensor. The system is thus able to detect an oncoming vehicle sooner. This may be particularly advantageous, as oncoming cars are likely to be traveling faster when the controlled vehicle is traveling faster. Accordingly, providing the light control system with a higher sensitivity to shorten the response time will better emulate a desired dimming characteristic of the headlamps by dimming the headlamps at a desired vehicle distance. To provide this function, in step 2107 the microcontroller 1105 increases the sensitivity and/or widens the horizontal viewing angle, whereas in step 2111, the microcontroller decreases the sensitivity and/or narrows the horizontal viewing angle.

It is further envisioned that adjustments can be made to the threshold in step 1707 as a function of speed. Such a system can be implemented using a look-up table stored in read only memory. Fig. 22 illustrates regions of the image sensor array 301, with the

regions radiating outwardly from the center. The regions may not be symmetrical since oncoming traffic usually occurs more to the left and signs and nuisance light sources are more likely to the right in right side drive countries. The look-up table sets a respective threshold for each of the regions 1-6 with the regions having sequentially, incrementally greater thresholds moving outwardly from the center. Thus the center region 1 will have the lowest threshold and the outer peripheral 6 will have the highest threshold. In addition, the thresholds at different angles will vary as a function of speed, such that at higher speeds, the thresholds will be lower in regions 3 through 5 than they will be at higher speeds. For example, where two fields of view are provided, one table will contain respective thresholds for pixels in the regions for lower speeds and another table will contain respective thresholds in regions for the higher speeds. Each table will assign an integration time and/or thresholds for use in analyzing different portions of the field of view. Because the greater the distance from the center the greater the viewing angle of the scene image, lowering the threshold in the outer regions increases the system's responsiveness to light sources at wider angles to the controlled vehicle.

Either the thresholds or the integration times for the pixel sensors of the image array, or both the thresholds and the integration times, can be changed to increase the sensitivity of the sensor at different speeds. Thus, it is envisioned that the field of view can be the same at both high and low speeds. However, the thresholds or the sensitivity (*i.e.*, the integration period or the amplifier gain) can be altered such that at low speeds images viewed at wide angles will have little impact on the dimming decision whereas at high speeds the images viewed at wide angles will have substantially more impact on the dimming decision at high speeds. It is further envisioned that instead of using look-up tables, an algorithm can be used to alter the sensitivity of the light sensor as a function of the angle of the image being viewed. Such an algorithm can be used to reduce the memory requirements for the system at the expense of requiring greater processing power to implement the function.

TURNING

As indicated above, it is disadvantageous to have a wide field of view when traveling slowly, such as occurs when traveling on back roads. However, when turning, it is necessary to have a wide field of view so that the image sensor can detect other vehicles that will come in front of the controlled vehicle prior to the controlled vehicle's headlamps striking the other vehicle. It may also be desirable to lower the thresholds for those regions of the sensed image in the direction of the turn. A subroutine that the

microcontroller 1105 uses for changing the viewing angle of the image sensor is disclosed in Fig. 23. It is envisioned that the subroutine will be executed each time a turn condition is initiated. For example, the microcontroller may detect any one or more of the following: activation of a vehicle turn signal alone or in combination with braking; a change in vehicle heading detected by the compass; global positioning information; and change in direction of the vehicle steering wheel or front tires. Responsive to such an event, the microcontroller 1105 will input the criteria to be used in making a decision as to whether the field of view needs to be altered. For example, a compass input, an input from a turn signal, global positioning system (GPS) receiver information, wheel turn indication from the vehicle steering system, vehicle speed, gyroscope output, tire speed sensors of an anti-lock brake system (ABS), or a combination of these inputs may be input in step 2301. Additionally, motion analysis (discussed below) may be used to sense turning of the vehicle.

In step 2303, the microcontroller 1105 will determine whether the criteria input in step 2301 indicate that the field of view should be altered. For example, when the vehicle turn signal is ON, and the vehicle is slowing down, the viewing angle sensitivity can be altered in the direction of the turn signal. Alternatively, actuation of the vehicle brake system in combination with a change in vehicle heading greater than a threshold angle of change could trigger a change in sensor viewing angle. In particular, the compass sensor information can be compared to a threshold change of direction to determine if the controlled vehicle 100 is turning, and responsive thereto the microcontroller 1105 can increase the sensitivity of the image sensor 201 and associated circuitry to light sources in the direction that the vehicle is turning. In order to implement such a turning control, the compass must generate vehicle heading information that the microcontroller can use. Commercially available compasses of the type used in vehicles generate an output, which will operate within 2° to 3° of accuracy as the vehicle turns. As a consequence, the rate at which the vehicle heading is changing and the direction that the vehicle is turning can be determined from the compass output or GPS information. In one embodiment, a compass is integrated into an electrochromic mirror with an automatic headlamp dimmer and the compass sensor signal is utilized to enhance the performance of the automatic headlamp dimmer.

If it is determined in step 2303 that a shift of the sensitivity pattern is required, the image sensor will shift its sensitivity as indicated in step 2305. For example, the high

sensitivity region 1 of the image sensor will generally be in the center of the array such that lights straightforward of the vehicle will have the strongest impact on the light control process. This is particularly advantageous as the brightest light produced by the controlled vehicle illuminates straight out in front of the controlled vehicle. As the controlled vehicle turns, the center axis of each of the regions 1 through 5 will shift as indicated in step 2305. As a consequence, these regions shift in the direction that the vehicle is turning such that they are centered to the right or left instead of being centered on the Y axis (Fig. 22). The sensitivity of the pixels in array 301 will thus shift right as the vehicle turns right, and shift left as the vehicle turns left. The degree that the sensitivity field shifts can vary depending upon the rate of change of the vehicle as well as the speed of the vehicle.

It is envisioned that the sensitivity can be changed using the lookup table. In particular the lookup table can contain respective integration periods and thresholds according to the location of pixels such that the sensitivity is as shown in Fig. 22 when the vehicle is traveling straight. As the vehicle turns, the addresses associated with columns of pixels may be altered such that the integration periods and thresholds for pixels in the column will shift left or right.

If the change is not sufficient to change the sensitivity, as determined in step 2303, the microcontroller will determine in step 2307 if the vehicle is going straight. The microcontroller will continue to monitor the rate of change of the vehicle heading until the vehicle is heading generally straight, as indicated in step 2307. It will be recognized that subroutine may be run once as an interrupt routine such that other subroutines may be run in between execution of routine 2300.

It is further envisioned that adjustments may be made in the vertical direction, in addition to the horizontal direction, for example if a change in vehicle inclination is detected.

LIGHT LIST HISTORY

Information about lights from previous frames can be useful in evaluating current frames. However, there is typically insufficient memory in low cost microcontrollers to store previous frames so as to retain a complete history of each frame's content. To minimize the memory requirements for implementing the system, while retaining some useful historical information, the brightness and location of one or more of the brightest lights detected in one or more previous frames are stored for use when processing a later frame. The entire light list from a previous frame need not be stored, unless significant memory is available. It is also useful to store the brightness and location of only the

brightest lights detected in one or more preceding frames. This information can be used to provide fast return to bright. After an oncoming car 105 has passed the controlled vehicle 100, it is useful to return to the high beam state as soon as possible. The night vision of the driver in the controlled vehicle may be temporarily impaired by the lights of the oncoming vehicle. The impact of this loss of night vision may be minimized by providing as much scene illumination as possible, as soon as possible, following passage of a vehicle. The microcontroller 1105 uses the light list history information to implement a fast return-to-bright. In particular, after step 2007 in Fig. 20, the microcontroller 1105 can determine whether the current frame is suddenly clear of bright light sources following a preceding frame that contained a very bright headlamp. In such a case, it is likely that the bright headlamp has just passed the controlled vehicle. If this situation occurs, the normal gradual, delayed fade-in period can be bypassed, or partially bypassed, and the high beams can be incremented by more than one state, such as by eight states (Fig. 19), to return to bright high beams more quickly.

Another scenario where the opposite result is desired occurs when the controlled vehicle comes up behind a preceding vehicle 110. As the controlled vehicle 100 approaches the preceding vehicle 110, the image sensor will detect the preceding vehicle's tail lights and dim the controlled vehicle's high beams responsive thereto. When the controlled vehicle moves to the side to drive around the slower preceding vehicle, the tail lights of the preceding vehicle will move out of the field of view of the image sensor. However, if the controlled vehicle's bright lights are activated, they will shine into the eyes of the driver of the vehicle being passed via the exterior rearview mirror. This is particularly problematic when the controlled vehicle is passing a truck, as it may take a long time to pass the truck. In this situation, the microcontroller can include a decision step following step 2007 to determine whether the previous frame included a tail light, and if so, to set a predetermined delay before the high beam headlamps can be activated. Where the high beam lights are dimmed responsive to preceding tail lights, a long delay will thus be introduced before turning the high beams back ON. For example, the high beams may come on several seconds after the tail lights move out of the scene being imaged. Motion analysis (described below) may be used to determine the rate of overtaking a preceding vehicle or the rate at which a preceding vehicle may drive out of range to thereby enable additional control over the headlamps.

The light history can also be used to select an integration period for the image array sensor pixels. In particular, it is envisioned that the amplifier gain 303 for the pixels

can have different gains or different integration intervals to increase the dynamic range of the light sensor. For example, three different gains or integration periods could be supported. A bright light will saturate all but the lowest gain, whereas a dim light such as a tail light can not be detected at a low gain. The light history can be used to remember that the sensor was washed out even at low gain, and an ultra low sensitivity can be used to detect lights.

Another use for the light list history is determining traffic density. In particular, the traffic density can be ascertained from the time period count between detecting oncoming headlamps. Thus, in or near a city where traffic is heavier, the system can respond to that condition by having a relatively long delay period. On the other hand, where traffic is light, such that oncoming traffic is less likely, the delay to turn on the bright lights can be short. It is envisioned that as the traffic increases, the return-to-bright time period will lengthen, whereas as the traffic decreases, the return-to-bright period will shorten. It is further envisioned that a number of different criteria could be used, such as the number of frames since a vehicle was previously detected or the percentage of time that the bright lights were on over a predetermined sampling period. In these ways, the number of objects detected over time can be used in the control of the headlamps, and in particular, to at least partially inhibit turning on the high beams.

It is envisioned that where a vehicle includes an electrochromic mirror glare sensor to detect light from the rear of the vehicle, or any other device having a rearward directed optical sensor, such as a rear vision system, additional information can be accessed which is useful for controlling the return-to-bright interval. In particular, when the bright headlamps are dimmed because of tail lights from a preceding vehicle, the headlamps can return to bright a predetermined time after the tail lights disappear from in front of the vehicle or when headlamps are detected by the rear glare sensor in the rearview mirror, whichever occurs first. Where headlamps from a trailing vehicle are detected immediately prior to the disappearance of tail lights from a preceding vehicle, the use of the rearward sensor for detecting a return to bright condition will be precluded. Additional considerations can be used in making the return-to-bright decision. For example, a minimum and a maximum interval can be required before return-to-bright.

It is envisioned that the system will only provide a variable return-to-bright interval under certain conditions, such that the return-to-bright interval will typically be a default time interval. However, a fast return-to-bright interval will occur following a condition where really bright headlamps are detected and then disappear, as such bright

lights will reduce the driver's night vision. Additionally, a slow return to bright condition would be used following disappearance of a preceding tail light since the driver's vision will not have been impaired and it is desirable to avoid shinning the high beams into the eyes of a vehicle being passed.

It is further envisioned that integration periods in the current frame may be adjusted based upon measurements made in a previous frame. In particular, an extremely short integration period can be used for the image sensor 301 where the lowest sensitivity measurements in a previous frame resulted in saturation of the light sensor. To the other extreme, where the previous frame's most sensitive measurements did result in detection of tail lights, a very long integration interval can be used for the image sensor 301 to look for tail lights in the current frame. Thus where three integration periods are typically used, two additional integration periods can be selectively used when the conditions necessitate either an extremely short or long integration interval.

Another use of the light list history is to distinguish signs and reflectors based on the movement of the objects in the image over time. Over a sequence of frames, reflectors and signs will typically move more rapidly toward a side of the image than will vehicles traveling generally in parallel with the controlled vehicle. Object lists may be created as the images are captured as disclosed above and in commonly assigned U.S. Patent Application No. _____(Attorney Docket No. GEN10 P380), entitled IMAGE PROCESSING SYSTEM TO CONTROL VEHICLE HEADLAMPS OR OTHER VEHICLE EQUIPMENT, filed on March 5, 2001, by Joseph Stam et al. The object lists created may be stored in memory from frame to frame to determine the behavior of a particular object in the image over time. For instance, reflections from signs or other stationary objects can be identified by the motion of this object in subsequent frames. Flashing overhead stop or caution lamps can be identified by their rate of flashing. After each frame is analyzed, the object least created from this frame is kept in memory and light lists from new frames are stored in a different location. The techniques disclosed in U.S. Patent Application No. _____ (Attorney Docket No. GEN10 P380) greatly reduce the amount of memory required for image analysis by not requiring an entire frame to be stored. Therefore, it is practical to store the object lists from several subsequent frames in the amount of memory typically provided in low cost controllers. The number of object lists stored from previous frames depends on the available memory. As few as one previous object list can greatly assist in identifying the motion of an object.

To facilitate tracking of objects over time, additional properties of objects can be added as entries into the object list. For a headlamp control application, an object list entry may contain:

X Center	X coordinate of the center of the object
Y Center	Y coordinate of the center of the object
Total GV	Sum of all the gray scale values of all pixels in the object
Size	Total number of pixels in the object
Max	The gray scale value of the brightest pixel
Redness	Brightness ratio between the clear and the red images for this object
PrevFrameIndex	Index of a light in a previous frame which is the same light as this one (if any)
Gain	Which image in the cycle; high, medium, or low gain
Vector	The direction in which the light is traveling

The total number of objects that can be stored depends upon the available memory. For example, the list above would require 9 bytes per entry. If, for example, 500 bytes of memory are available, 50 objects could be tracked. The object list memory may be allocated as a contiguous array of object entries. Pointers indicate the start of the object lists for the current frame and previous frames. The newest objects identified replace the oldest objects in the list.

The objects in the new object list are then compared to the objects in the previous object list to determine if any of the new objects are the same as previous objects. A comparison is made by determining if the X and Y center of an object in the current list is within a radius of a certain number of pixels from an object in the previous list. The radius threshold is determined by calculating the maximum amount an object can reasonably move in an image from frame to frame. This number is a function of the resolution of the sensor and may also be a function of the vehicle speed and turn rate. It is possible for two lights in the current list to be daughters of the same light in the previous list. This may occur as a vehicle approaches from a distance and the two headlamps, which before were imaged as one blob, become separated in the image.

Once an object in a previous light list is determined to be the same object as in the current light list, a motion vector can be computed to quantify the rate and direction of

motion of the object. Motion detection can be used to distinguish between signs and reflectors, street lights, and vehicles. As illustrated in Fig. 39, the headlamps 3901 of oncoming vehicles tend to move down and to the left of the image over a sequence of frames, while signs and reflectors 3903 tend to move down and to the right. Overhead street lights 3905 tend to move upward. While other techniques are disclosed herein for distinguishing between these objects, motion detection can further increase the accuracy at which the system is able to make such distinctions.

Further, such motion detection can be used to distinguish between headlamps and tail lights of vehicles and thereby further enhance distinction that is otherwise based on color analysis.

Fig. 40 shows a functional block diagram of one embodiment of the present invention. As shown, the system 4000 includes an image sensor 201, an lens 202, a previous light list(s) 4001, and an image processing routine (seed fill) 4003, which receives data from image sensor 201 and accesses previous light list(s) 4001 to generate a new light list 4005. New light list 4005 includes information from which various parameters including the brightness 4007, position 4009, size 4011, color 4013, AC component 4015, and motion 4017 of each object may be derived. The system 4000 further includes decision rules 4020 that control the exterior vehicle lights including the low beam headlamps 4021 and the high-beam headlamps 4023 by adjusting their activation state, brightness, aim, and/or focus to vary the illumination pattern produced thereby. Decision rules 4020 may control the exterior lights as a function of any one or combination of parameters 4007-4017 as well as ambient light levels 4025, vehicle turn rate 4027, vehicle speed 4029, and the state of user actuated switches 4031 (as discussed further below). Decision rules 4020 may be implemented in a logic circuit (*i.e.*, microcomputer), a fuzzy logic circuit, or a neural network.

An example of how decision rules 4020 may use more than one parameter to control the exterior lights is to reduce the perceived brightness or otherwise modify the glare area of the present beam illumination pattern when a nearby headlamp is detected. Decision rules 4020 may determine that a nearby headlamp is present when the detected headlamp has high brightness and a relatively high amount of motion. A distant headlamp, on the other hand, would have low brightness and a relatively low amount of amount of motion. A sign would have a low level of brightness but have a relatively high amount of motion.

AUTOMATIC AIM CALIBRATION

Variations in the orientation of the image array sensor relative to the windshield angle may result in variations in aim of the sensor, which may negatively impact the performance of the dimmer. These variations can be calibrated out over time using a maximum bound placed on the expected variation in mounting. In general, on straight roads, distant oncoming headlamps will be coming from directly ahead of the optical sensor system 102. The calibration system uses faint headlamps detected near the center of the image, and preferably only those within a center window corresponding to the expected mounting variations. Such headlamps meeting certain criteria will have their position averaged with other faint headlamps meeting the same criteria. Over time, this average of these lights should correspond to the center of the field of view. This average value can be used to offset the image window relative to the X and Y-axis in Fig. 22.

More particularly, in order to detect a flat straight road, from which a misalignment of the optical sensor system can be detected, a variety of different orientation inputs can be used. The speed of the vehicle may be required to remain in a certain range between 35 to 50 mph. The vehicle can be determined to be traveling straight using the compass, GPS, or monitoring the operation of the vehicle steering system. If the heading changes during the test, the measurement will be considered to be in error. If the vehicle has equipment for providing an elevation measurement, any changes in the vehicle's elevation during the calibration process will result in an error. The elevation measurement may thus be used in determining whether to adjust the field of view.

A distant vehicle is initially detected by sensing white light near the center of the image, which is faint at the highest sensitivity (longest integration period) of the image sensor. As this light gets brighter, the system monitors the orientation inputs to detect whether the road continues to be flat and straight. If it remains flat and straight for a period of time which is at least twice the time period required for the vehicles 100, 105 to pass, the measurement will be valid. The center point detected initially will then be averaged with previous valid measurements, and the average measurement will be considered to be the center of the image. This will be the average X and Y coordinates, which together will mark the center of the image sensor. This location can be saved in EEPROM or flash ROM.

Another method of aiming calibration is to take a very high gain image and look for the reflection of the road. The average point where this reflection occurs can be used to calibrate the aim.

LIQUID CRYSTAL FILTER

An alternative optical system may include a liquid crystal filter 2405 that can be used to selectively provide both a red and a blue filter, whereby red and blue images may be viewed by an image sensor 2401 through a single lens structure 2403. In such a structure, the image sensor 2401 need only have one imaging area (*e.g.*, array area 702 instead of array areas 702 and 703 as required with two lenses). The filter 2405 is implemented using a liquid crystal colored light switch 2503 (Fig. 25) electrically connected to microcontroller 1105 through conductors 2413 and 2411. The filter includes a neutral polarizer 2501, a liquid crystal shutter 2503, a red polarizer 2505, and a blue polarizer 2507. The neutral polarizer 2501 and red polarizer 2505 are oriented with their polarizing axis aligned in one direction and the blue polarizer 2507 is oriented with its polarizing axis oriented orthogonally to the red and neutral polarizer. The liquid crystal shutter 2503 is implemented using a twisted neumatic (TN) liquid crystal shutter selectively energized under the control of microcontroller 1105. In particular, when the shutter is not energized, the liquid crystal device transmits the red light. When the liquid crystal is energized, the liquid crystal device transmits blue light.

It is thus possible to measure the relative intensities of two colors of light using a single photo sensor or image area. In the unenergized state all visible light is polarized in the horizontal direction by the neutral polarizer, rotated 90° by the unenergized TN liquid crystal cell to the vertical direction, and then all but the red light will be absorbed by the horizontal red polarizer. The red light will then pass through the vertical blue polarizer. In the energized state all visible light will be polarized in the horizontal direction by the horizontal neutral polarizer, and not rotated by the energized TN liquid crystal cell, all visible light will be transmitted by the horizontal red polarizer and all but blue light will be absorbed by the vertical blue polarizer. The liquid crystal device can be used as a high-speed light switch to alternate between transmission of blue light and red light. The relative intensities of the red and blue light components of an object or light source can then be determined. Alternatively, a green polarizer can be substituted for either the red or blue polarizer to switch between transmission of blue and green or red and green light respectively. Furthermore, a clear polarizer can be substituted for the blue polarizer to switch between red and clear.

WINDSHIELD WIPER

To improve dimmer performance when it is raining, it is useful to synchronize the acquisition of images with the windshield wipers. For example, a signal can be provided from the wiper motors to indicate the position of the wipers. Immediately after the wiper passes over the sensor, and image can be taken to look for cars. Most importantly, it is necessary to avoid taking images while the wiper is over the image sensor 301.

Where the controlled vehicle 100 includes a moisture sensor, the moisture sensor can monitor the windshield wiper. A moisture sensor providing such information is disclosed in U.S. Patent No. 5,923,027, entitled MOISTURE SENSOR AND WINDSHIELD FOG DETECTOR, issued to Joseph Stam et al. on July 13, 1999.

Information regarding the on/off status of the windshield wipers may also be used to control the vehicle headlamps. When the headlamp controller determines that the windshield wipers have been turned on, the headlamp controller may turn on the low beam headlamps of the vehicle assuming they are not already on. In addition, the headlamp controller may disable the headlamps from operation in a high beam state when the vehicle windshield wipers are activated. This may be accomplished by simply maintaining the headlamps in the low beam state when in an automatic control state or otherwise deactivating the automatic control state such that the high beams may not automatically be turned on while the wipers are activated. Additionally, the headlamp controller could disable any manual activation of the high beams so long as the windshield wipers are turned on. Also, foul weather lights, particularly the fog lights, may be automatically activated when the wipers are on.

The headlamp controller may receive a signal over the vehicle bus from the windshield wiper controller indicating that the windshield wipers are activated. Alternatively, the headlamp controller may determine that the windshield wipers are activated upon detecting a wiper within the scene imaged by the imaging system. As yet another alternative, the headlamp controller may receive a signal from a rain sensor that is used to control the windshield wipers indicating that a control signal has been transmitted to activate the windshield wipers.

DECELERATION

In addition to varying the image sensor operation depending upon the vehicle speed, other speed criteria can be used to control the operation of the vehicle headlamps. Turning on the high beams may be inhibited when the vehicle is decelerating, when the brakes are actuated, or when the vehicle is traveling slowly. This prevents high beams

from coming on when coasting to a stop or approaching an intersection. Deceleration can be detected from the speed input to the microcontroller 1105 (Fig. 11).

BAD PIXEL CALIBRATION

An image sensor may contain one or more bad pixels. These bad pixels may manifest themselves as extremely sensitive pixels, which may cause "white-spots" in the image. Such "white-spots" will cause false light detection in the image if the sensor is not calibrated to remove them from calculations. During production tests, the location of these white spots can be measured and stored in a programmable memory associated with microcontroller 1105. To compensate for such bad pixels during normal operation of the image array sensor, after an image is acquired, the pixel value at the white-spot location may be replaced with the average value of its neighboring pixels.

It is possible that a white-spot may form during use of the image sensor, such that it is not detected during production tests. Such a situation will cause the device to be inoperable. To avoid this problem, it is desirable to calibrate the white-spot out of the image after recognizing the bad pixel. In order to detect the white spot, it is necessary to detect that the pixel remains "lit-up" in several images, and preferably over an extended period of time. A bad pixel will stand out if it is repeatedly lit-up when neighboring pixels are dark. When such a pixel is detected, it can be added to the list of bad pixels.

It is envisioned that bad pixels can be periodically tested to determine if their performance has improved. This can be accomplished by monitoring a sequence of images to determine whether the center pixel is dark while the adjoining pixels are not dark.

"PICKET FENCE"

In controlling the vehicle headlamps, it is desirable to avoid a condition where the headlamp high beams flash ON and OFF at a relatively rapid rate, this is particularly important if non-variable two-state headlamps are used. For example, a sign along the road can cause flashing of the headlamps between bright and normal levels. This occurs when reflections of the bright high beams from a sign are bright enough to cause dimming of the high beams and reflections of headlamp low beams are low enough that the bright high beams are turned ON. The condition can be avoided by having the system look at the object that caused the high beams to turn OFF. When this condition occurs, the light level at that position is ignored while the pixels around the object are not ignored for a predetermined number of cycles, such as ten cycles. The length of time that the object is ignored can be variable as a function of the vehicle's speed. The higher the vehicle's

speed, the shorter the period that the object will be ignored. During the time period, the lights will be controlled using pixels other than those associated with the object being ignored.

A reflector can be distinguished from an active source of light by flashing the vehicle headlamps off. The time period that the headlamps are off is so short that the image sensor can sense the loss of light even though the human eye will not perceive, or barely perceive, that the lights were off. A light emitting diode headlamp described hereinbelow can be turned OFF and ON very rapidly, such that it will be off for such a short period of time. In operation, the microcontroller 1105 controls the headlamp high or low beams to turn OFF, and controls the image sensor to image the scene during that brief time period that the headlamps are off. The off time period may for example be 10 ms.

FOG DETECTOR

It is desirable for the vehicle to reliably detect a foggy condition, and in response thereto, to automatically turn ON or OFF front and rear fog lamps. Effective fog detectors have not been available heretofore. Fog may be detected by using the image sensor and optical system for the headlamp ON/OFF and headlamp dimmer control. Fog can be detected by a reduced scene contrast along with scene ambient light level determinations. The ambient light can be determined from the mean gray scale value of the pixels imaging the forward scene or by a separate ambient light sensor, such as the ambient light sensor used for the electrochromic mirror. It is envisioned that the mean can be a clipped mean value. The variance of the gray scale values of the pixels provides a measure of the contrast in the image. Alternatively, the variance can be determined from the standard deviation of the pixels, and in particular, when the standard deviation is less than a standard deviation threshold level, the presence of fog is identified responsive to which the fog lights can be turned ON. Alternatively, the individual differences between the average pixel level and each individual pixel level can be added for the entire image sensor, and when this total variance exceeds a variance threshold level, the presence of fog is detected. Either of these examples of fog criteria can be used as a measure of contrast.

Several additional factors may also be considered. The contrast value may be an average contrast value over several images. The contrast may be determined in row-wise fashion to determine the level of fog. Various regions of the scene may be considered independently. If two color lenses are present as in the headlamp dimmer, color information may be used. The actual values of the brightness/contrast ratios and the proper image sensor exposure times should be determined experimentally. The device can

be set to only operate between a predetermined range of brightness levels, such that if the ambient level is too high or too low, the fog detector will not operate, and manual override will be required. The ambient light conditions for fog may for example be between 1 and 1000 lux. Both the image sensor and the ambient light sensor can be used to detect fog. If the ambient light level detected by the ambient light sensor is within the appropriate range, an image of the forward scene is acquired with a sensitivity set to the average gray scale value of the pixels (*e.g.*, 128 lux). If the contrast at a given brightness level is below a predetermined threshold level, it is determined that fog is present.

SNOW AND FOG DETECTOR

It is also desirable for a vehicle to detect when it is snowing. Typically, in heavy snow conditions, it is not desirable to activate the high beams. Further, even if it is not snowing heavily, the snow may reflect the light from the high beams in such a way that the headlamp controller mistakenly perceives an oncoming vehicle based upon the reflected light from the controlled vehicle's own headlamps.

To detect snowfall, it is preferable to provide a sensing system that senses light levels forward and above the vehicle. To obtain the light level above the vehicle, a separate light sensor may be positioned to sense light from the sky above the vehicle. Such a sky sensor may include a single pixel sensor positioned at a 45° angle relative to the sensor used to sense light forward of the vehicle. The sensor used to sense light forward of the vehicle may be a single pixel sensor or the image array sensor used to image the scene forward of the vehicle for headlamp control. The values sensed by the forward and sky sensor may be averaged over a period of time. Theses sensors may be constructed in accordance with the teachings of U.S. Patent Application No. 09/307,191, entitled PHOTODIODE LIGHT SENSOR, filed on May 7, 1999 by Robert H. Nixon et al. and U.S. Patent Application No. 09/491,192, entitled VEHICLE EQUIPMENT CONTROL WITH SEMICONDUCTOR LIGHT SENSORS, filed on January 25, 2000, by Jon H. Bechtel et al.

The controller is coupled to receive the output of both the forward sensor and the sky sensor and compares the relative brightness in front of the vehicle with that above the vehicle. In some conditions, it may be desirable to compare the relative brightness as the brightness of the vehicle's headlamps increases. The headlamp controller determines that it is snowing or foggy when a ratio of the relative brightness forward of the vehicle to that

above the vehicle reaches a threshold as the brightness of the vehicle's headlamps increases due to the reflection of the headlamp light off the snow in the forward scene.

When the controller determines that snow is falling, it may activate the low beam headlamps if they are not already activated and can disable the high beams from being activated either through automatic control or manually. Further, automatic control may be disabled and foul weather lights may be activated. Additionally, the brightness of the vehicle's tail lights and/or brake lights may be increased to increase the visibility of the vehicle to other rearward vehicles.

The headlamp controller may also infer that the conditions outside of the vehicle are snowy or foggy when the driver turns the front windshield defroster fan to full speed. In such an event, the controller may also disable the headlamps from operation in a high beam state and may disable further automatic control.

The techniques described in this section are particularly well-suited for detecting fog at night, while the techniques described in the preceding section is better suited for detecting fog during daytime.

DAYTIME RUNNING LIGHT AND TAIL LIGHT CONTROL

As discussed above, daytime running lights (DRLs) are provided on some vehicles. As also discussed above, DRLs are provided by operating the high beams at a reduced intensity by changing the PWM drive signal delivered to the high beams during daylight conditions. For this purpose, an ambient light sensor 1107 can be used to determine daylight conditions and switch the headlamps to DRL operation when daylight is detected.

The controller may also utilize the sensed ambient light level to turn on the low beams when it is sufficiently dark. Additional the DRLs may be controlled to vary their intensity during daylight conditions. Ambient light levels may vary considerably from the brightest of daylight conditions to the conditions existing just prior to activation of the low beam headlamps at dusk. There have been complaints about the brightness of DRLs when the ambient light levels are relatively dark. In the brightest conditions, however, the DRLs are less bothersome because they appear to be less bright relative to the ambient light levels surrounding the vehicle. Accordingly, the headlamp control circuit may be configured to vary the brightness of the DRLs in response to the ambient light levels sensed by an ambient light sensor. Specifically, the control circuit may increase the brightness of the DRLs in response to increasing ambient brightness.

A similar problem exists with respect to a vehicle's tail lights and brake lights. Tail lights and brake lights preferably have brightness levels that are sufficient to allow

drivers to the rear of the controlled vehicle to easily determine whether the tail lights and brake lights are on or off regardless of the ambient light level. On the other hand, at nighttime, tail lights and brake lights can be too bright so as to adversely affect the night vision of drivers to the rear of the vehicle. Accordingly, it is preferable to decrease the intensity of tail lights and brake lights with decreasing ambient light levels. Such intensity variation may be continuous or accomplished in discrete steps. Additionally, it may be desirable to increase the intensity of the tail lights and/or brake lights when foul weather, such as rain, fog, or snow, is detected.

USER CONTROL AND FEEDBACK

An alternative embodiment of the present invention is shown in Fig. 34. The same reference numerals are used to illustrate common elements as in the embodiment shown in Fig. 11. Like the embodiment shown in Fig. 11, this alternative embodiment shown in Fig. 34 includes an image sensor chip 201 and a lens 202 preferably mounted in a mirror mount 1003. A compass sensor 1135 is also preferably mounted in mirror mount 1003. The compass sensor may alternatively be mounted in mirror body 1000. A microcontroller 1105 is preferably mounted in mirror body 1000 and is coupled to image sensor chip 201 and compass sensor 1135. Mirror body 1000 may further include an electrochromic element 1102 and a compass display 3404, both of which may be controlled by microcontroller 1105.

A forward-facing ambient light sensor 1107 and a rearward-facing glare sensor 1109 are also preferably provided in mirror body 1000. Additionally, a sky sensor 3402 may be provided in mirror housing 1000, which is inclined at an angle to view the scene of the sky above and slightly in front of the vehicle. Such a sky sensor 3402 may be used for detecting snow or other ambient light conditions. Sky sensor 3402 may be a single pixel sensor or may optionally be incorporated in the mirror mount as an optical element that images a view of the sky onto a designated area of the image sensor chip. Such a structure is disclosed in commonly assigned U.S. Patent No. 6,130,421.

Microcontroller 1105 is coupled to the vehicle bus 3406 for exchange of various information and control signals. As indicated, a switch control module 3408 may be coupled to the bus for providing the states of various switches that may be manipulated by the user to microcontroller 1105. For example, a high/low beam switch 3410 may be coupled to switch control module 3408, as may be a headlamp on/off switch 3412. Such switches are common in vehicles with the high/low beam switch typically being mounted

to the steering wheel column and the headlamp on/off switch being positioned on the vehicle instrument panel.

The present invention also provides for a user sensitivity selection switch 3414 that is coupled to switch control module 3408 to allow a user to adjust the sensitivity of the headlamp control system. Microcontroller 1105 may respond to changes in the sensitivity setting set by the user by adjusting the thresholds that the microcontroller utilizes to compare to detected light sources to determine when to turn off or on or fade in or out the high beams. Alternatively, microcontroller 1105 may utilize the sensitivity setting to change the rate at which it changes headlamp brightness states or may change the duty cycles associated with those states. Further still, microcontroller 1105 may adjust the sensitivity by changing the integration time of some or all of the pixels in the CMOS image array sensor. Also, the sensitivity to light in various portions of the scene in front of the vehicle may be adjusted by varying the thresholds/integration times for pixels in the image array sensor that image the peripheral regions of the forward scene. Other adjustments may also be programmed into microcontroller 1105 to determine how it should respond to adjustment of a user-sensitivity switch 3414.

As will be explained further below, the present invention also provides for the inclusion of an automatic headlamp control on/off switch 3415 by which a user may disable the automatic control of the vehicle headlamps.

Also coupled to vehicle bus 3406 is a lighting control module (or body controller) 3416, which controls the state and possibly the perceived brightness of the low beam headlamps 3418, the high beam headlamps 3420, and the brightness of the tail lights 3422. Front control module 3416 may also be used to control the on/off status or perceived brightness of fog lamps. As mentioned above, the brightness of daytime running lights may be adjusted by controlling the perceived brightness of high beams 3420.

Fig. 35 shows a state diagram for operation of microcontroller 1105 in response to various states of the switches coupled to switch control module 3408. As illustrated, the microcontroller 1105 may operate in an automatic mode or a manual mode in response to the activation of the automatic control on/off switch 3415. Such a switch may be provided on the steering wheel column and integrated into the same column switch that is utilized to manually activate the high beams. For example, if such a column switch is in a middle position, microcontroller 1105 will operate in a manual mode. If, for example, this column switch is moved to a forward position, microcontroller 1105 will respond by entering an automatic control mode. As discussed above, during an automatic control

mode, microcontroller 1105 varies the headlamp state between a high beam on state 3502 and a high beam off state 3504 based upon the light sources detected by the image sensor or upon other events. In the manual mode, however, the headlamps are operated manually in a conventional manner. For example, the high beams may initially be in an off state 3508 and be turned on by manual toggling of the column switch or other mechanism such that the high beams are in an on state (3510). Toggling a switch back would turn the high beams off. If the column switch includes a flash-to-pass feature, flashing the column switch would temporarily turn the high beams (on state 3512) whereas when the user releases the column switch, the high beams are turned off and returned to state 3508.

Fig. 36 shows a state diagram showing a more complex control scheme. As with the control scheme shown in Fig. 35, microcontroller 1105 may operate in either an automatic mode or a manual mode. Transition between the automatic or manual modes is generally manually selected using a switch 3415 that may, for example, be provided on the steering wheel column or on the vehicle instrument panel. In the manual mode, microcontroller 1105 operates in the same manner as described above with respect to Fig. 35. In the automatic mode, however, microcontroller 1105 initially operates in an automatic high beam control state 3602 whereby the high beams are automatically controlled to transition between on and off states, as well as states of intermediate brightness if the headlamps are capable of this feature. When operating in the automatic mode in accordance with the scheme shown in Fig. 36, when a user toggles the column switch 3410 for manually turning on the high beams, microcontroller 1105 turns on the high beams in a manual override state 3604 until such time that the user again toggles the column switch, at which point microcontroller 1105 returns to the automatic high beam control state 3602. In the event that the user manually activates the flash-to-pass column switch, microcontroller 1105 enters the high beam on flash-to-pass state 3606 and remains in this state so long as the flash column switch remains in the flash-to-pass position. Once the user releases the flash-to-pass column switch, microcontroller 1105 returns to the automatic high beam control state 3602.

While the high beams may be activated in their brightest state during the flash-to-pass state, it will be appreciated that, according to one embodiment of the present invention, the brightness of the headlamps during a flash-to-pass state may be less than full brightness. Specifically, the brightness of the headlamps during a flash-to-pass state may be varied as a function of the sensed ambient light level and also as a function of the current brightness level of the headlamps. In this manner, any time the flash-to-pass

switch is actuated, the perceived brightness of the headlamps will be increased by a predetermined increment above that of their current brightness level so as to provide a perceivable increase in the brightness of the headlamps to any preceding vehicles, but without causing a sudden and excessive glare in the eyes of the drivers of such vehicles.

Fig. 37 shows yet another state diagram for a more complex control scheme. Again, microcontroller 1105 operates in either an automatic or a manual mode. When in the manual mode, microcontroller 1105 allows the headlamps to be controlled in the same manner as discussed above with respect to Figs. 35 and 36. Again, operation in either the automatic or the manual mode may be manually selected by the user by manipulation of a switch 3415.

When in the automatic mode, microcontroller 1105 operates in an automatic high beam control state whereby the control state varies between a high beam on state 3702 and a high beam off state 3704. Microcontroller 1105 moves between states 3702 and 3704 in the manner discussed above responsive to the light sources detected by the image sensor. When microcontroller 1105 is operating in an automatic mode with the high beams on (state 3702) and then the column switch 3410 is toggled, microcontroller 1105 will interpret the toggling of the column switch as a request to turn the high beams off. Microcontroller 1105 thus enters a high beam off manual override state 3708. Microcontroller 1105 will maintain the high beams in their off manual override state 3708 for a predetermined time period, such as 30 seconds or until the column switch is again toggled. When the time period expires, microcontroller 1105 will initially maintain their high beams in the off state, but will move to state 3704 whereby the high beams may be automatically turned back on based upon the automatic headlamp control algorithm that is responsive to the light sources detected by the image sensor. If microcontroller 1105 is in the high beam off manual override state 3708 and the column switch is again toggled, microcontroller 1105 will interpret this action as a request by the user to move to a high beam on manual override state 3706. Microcontroller 1105 will maintain this manual override high beam on state 3706 for a predetermined time period, such as 15 seconds, or until the column switch is again toggled. If the column switch is again toggled, microcontroller 1105 will move to the high beam off manual override state 3708. Microcontroller 1105 will leave state 3076 and will enter state 3702 when the timer expires so as to initially maintain the high beams in their on status but allow for the automatic control algorithm to dim or turn off the headlamps in response to light sources detected by the image sensor.

If microcontroller 1105 is operating in the automatic control state with the high beams off (state 3704) and the column switch is toggled, microcontroller 1105 will interpret this as a command to enter the high beam on override state 3706. Microcontroller 1105 will then leave the high beam on manual override state 3706 based on the criteria discussed above.

If microcontroller 1105 is operating in the automatic control state with the high beams off (state 3704) and the user manually activates the flash-to-pass column switch, microcontroller 1105 will move to state 3710 by which the high beams are turned on in a flash-to-pass state. The high beams will remain on so long as the user holds the column switch in the flash-to-pass position. Once the user releases the flash-to-pass column switch, microcontroller 1105 will return to the automatic mode with the high beams off (state 3704). If the microcontroller is in the automatic control states with the high beams already on (state 3702), at such time that the user activates the flash-to-pass column switch, the high beams will remain on in state 3710 so long as the user holds the column switch in the flash-to-pass position. However, once the user releases the column switch, microcontroller 1105 returns to state 3704 rather than state 3702 so as to turn the high beams off. If conditions warrant, headlamp controller 1105 will turn the high beams back on under automatic control.

Other features that may be implemented would allow the automatic headlamp controller to gradually fade the brightness of the headlamps at such time that the headlamp switch 3412 is turned to an off position or if the vehicle ignition is turned off. Alternatively, the headlamp controller may fade the headlamps a designated time after it is detected that all occupants (or just the driver) have exited the vehicle. Such fading provides the benefits of illuminating the area in which the vehicle occupants will exit the vehicle. By fading the lights in this manner, rather than leaving the lights on in their full brightness states for a fixed time period, it is less likely an observer would suggest to the driver or other occupants that they had left their vehicle lights on since that observer would be able to see the fading of the headlamps during such time period.

Referring back to Fig. 34, an instrument control panel module 3424 may be coupled to vehicle bus 3402. An indicator 3426 may be coupled to instrument panel control module 3424 so as to receive control signals from microcontroller 1105 over vehicle bus 3406. Typically, vehicles have had a single indicator, often a blue light, which is activated when the vehicle's high beams are in an on state. Such single indicator, however, does not provide a user with any feedback as to the relative brightness of the

high beams when they are controlled automatically by a headlamp controller to have various intermediate brightness levels. To provide such feedback, the system may be configured such that indicator 3426 has a brightness that varies in proportion to the brightness level of the headlamps. Such variance may be along a continuum or may change in noticeable incremental steps. The brightness of indicator 3426 may also be doubled or increased significantly when the headlamps are in a high beam state as a result of manual activation of the high beams so as to provide the user with a clear indication that the system has appropriately responded to such manual activation. Another alternative indication scheme is to have the indicator change color as a function of the brightness of the headlamps. Yet another indication scheme is to configure indicator 3426 to include a scale that indicates a relative brightness of the headlamps. Such a scale may be provided as a multi-segmented display, such as the exemplary display shown in Fig. 38 in which the number of segments that are illuminated correspond to the relative brightness of the headlamps. Thus, for example, headlamp icon segment 3802 may be illuminated at all times that the headlamps are on and the various segments 3804-3812 are independently activated with the increasing brightness level of the headlamps. In addition, the color of the indicator shown in Fig. 38 may change to indicate manual activation or operation in either the manual or automatic modes or to indicate operation of the low beams, DRLs, fog lamps, etc. Another way to indicate to the driver that the headlamp controller is operating in an automatic control mode is to provide an indicator light in the auto/manual select switch 3415 such that when the user depresses the auto/manual select switch 3415, a light within or near by the switch is activated. Other indication techniques known in the art may similarly be utilized.

As discussed above, the vehicle headlamps may be operated in a super-high beam state in accordance with the laws of the various countries in which the vehicle may be used. Such super-high beams have been proposed to have an intensity of greater than 75,000 cd at 0° vertical and horizontal. Such super-high beams have been approved for use in Europe and found to be beneficial. In the event the vehicle is equipped with this capability and the appropriate headlamps, the control circuit may control the super-high beams to be activated when it detects that the vehicle is above a predetermined speed level. In this manner, the super-high beams can most typically only be activated when the vehicle is operated on an expressway.

Additionally, if such super-high beams are provided, the system may be programmed to have increased sensitivity to light sources detected forward of the vehicle. The super-high beams may also be faded as light sources are detected as coming closer to the vehicle.

As shown in Fig. 34, microcontroller 1105 may be coupled to a GPS receiver 3450 via vehicle bus 3406. Microcontroller 1105 may receive information from GPS receiver 3450 that is indicative of the location and possibly the direction of travel of the vehicle. GPS receiver 3450 may be part of a navigation system or may be part of any other system in the vehicle. The GPS receiver and antenna may be mounted to the rearview mirror assembly as disclosed in commonly assigned U.S. Patent No. 6,166,698.

The information received from GPS receiver 3450 may be in a form that already identifies the location and direction of the vehicle or it may be in the form of information received directly from the satellites from which the location would need to be computed by microcontroller 1105. If GPS receiver 3450 is part of a navigation system, the navigation system may process the information from the GPS receiver and provide exactly the information needed by microcontroller 1105. Such information may include, for example, an indication whether or not the road that the vehicle is currently traveling on is a residential road, a divided highway, or an expressway. Microcontroller 1105 may then utilize this information to control the exterior lights on the vehicle. Specifically, microcontroller 1105 may prevent actuation of the vehicle high beams or the super-high beams when the vehicle is traveling on a residential road. Microcontroller 1105 may also disable the super-high beams except when the vehicle is traveling on a divided highway or expressway. The location of the vehicle may also be utilized to automatically enable or disable the super-high beams based upon a determination of whether the vehicle is located in a country, state, or municipality that permits (or prohibits) the use of such super-high beams. Additionally, the location of the vehicle may be used to determine whether the vehicle is presently driving in a region where vehicles are driven on the left hand side of the road or in a region where vehicles are driven on the right hand side of the road.

LED HEADLAMPS FOR HEADLAMP STEERING AND HEADLAMP FLASHING

It has long been considered to be desirable to provide headlamps that can be steered in the direction that the vehicle is turning. It is also desirable to provide forward lighting that can be turned OFF, or substantially attenuated, for such a short period of time that the driver does not notice that the lights are OFF. In this way, reflections do not exist

during image acquisition. Although a light emitting diode (LED) lamp can be used to provide these features in a cost-effective manner, LED lamps producing enough light to implement a vehicle headlamp are not commercially available. LEDs suffer from a number of disadvantages that limit their application in vehicle headlamps, not the least of which are the relatively small amounts of light produced by LEDs and manufacturability limitations when incorporating LEDS having exotic constructions. Because of these disadvantages, LED lamps have not been used to implement a vehicle headlamp despite the fact that LEDs are more rugged, more energy efficient, and significantly longer lasting than other light technologies. Additionally, means of producing white light from LEDS have only recently become practical as discussed in U.S. Patent No. 5,803,579, entitled ILLUMINATOR ASSEMBLY INCORPORATING LIGHT EMITTING DIODES, issued to John K. Roberts et al. on September 8, 1998.

An LED headlamp 2600 is disclosed in Figs. 26a and 26b. The LED headlamp can be used to very briefly flash OFF, or dim, the headlamps during an image-sampling interval. The LED headlamp 2600 includes a heat extraction member 2601 that serves as a support for mounting semiconductor optical radiation emitters 2603, 2605. Where the semiconductor optical radiation emitters 2603, 2605 are electrically connected to the heat extraction member, the heat extraction member provides an electrical connection to the semiconductor optical radiation emitters in addition to providing a thermal path for removing heat generated within the semiconductor optical radiation emitters during operation. It is envisioned that the emitters 2603, 2605 can be electrically isolated from the heat extraction member such that the heat extraction member only provides a thermal path. Each of the emitters 2603 is connected to electrical conductor strip 2607 through a wire bond 2609 and a resistor 2611. Each of the emitters 2605 is connected to electrical conductor strip 2613 through a bonding wire 2615 and a resistor 2617.

The heat extraction member 2601 may be constructed of any suitable material, and may be formed in any desired configuration. The front face of the illustrated heat extraction member is generally rectangular in shape, including 33 wells, each of which receives semiconductor optical radiation emitters 2603, 2605. The back of the heat extraction member includes fins 2621 that provide a large surface for thermal dissipation to the ambient air. It is envisioned that the heat extraction member may alternatively have other configurations which enable light steering, such as being generally convex, shaped like a portion of a cylinder side wall, an elongate bar to extend across the front of the vehicle, or a plurality of joined planar surfaces extending at different angles, or the like.

The heat extraction member can be chamfered, or otherwise contain extensions, slots, holes, grooves and the like, and may incorporate depressions such as collimating cup or other form to enhance optical performance. The illustrated heat extraction member includes elliptical cups 2602. The heat extraction member may be composed of copper, copper alloys such as beryllium, aluminum, aluminum alloys, steel, or other metal, or alternatively of another high thermal conductivity material such as ceramic. Preferably, the heat extraction member is constructed from an electrically and thermally conductive metal. Such materials are commercially available from a wide variety of sources.

The cups 2602 are formed in the top surface of the heat extraction member for receipt of the semiconductor optical radiation emitters. The illustrated cups 2602 are elliptical to accommodate two emitter chips 2603, 2605 side-by-side. However, the cups may be of any suitable shape such as round, elliptical, rectangular, square, pentagonal, octagonal, hexagonal, or the like. The elliptical cups have the advantage of accommodating more than one emitter while providing an efficient reflector for projecting light outwardly in a desired radiation pattern. It is envisioned that the region of the heat extraction member directly underlying the point of attachment of the semiconductor optical radiation emitter may be coated with nickel, palladium, gold, silver or other material including alloys, in order to enhance the quality and reliability of the die attach. Other thin-layered materials may be optionally inserted between the emitter and the heat extraction member to achieve a variety of desired effects without departing from the scope and spirit of the present invention. The material preferably provides an electrical connection between the emitters and the heat extraction member whereby the heat extraction member can provide a reference potential, which may for example be ground potential. The materials are preferably adhesive, electrically insulative, and either conductive or patterned composite of electrically insulative and conductive materials, and without significantly impeding thermal transfer, may be used to support, bond, electrically connect or otherwise mount to the emitter to the heat extraction member. The region of the heat extraction member within optical-enhancement cup feature may be coated with silver, aluminum, gold or other suitable material to increase reflectance and improve the optical efficiency of the device. The area outside of the encapsulant may be coated with nichrome, black oxide or other high emissivity treatment to improve radiative cooling.

The connection of the semiconductor optical radiation emitter is preferably by the use of a special type of electrically conductive adhesive die-attach epoxy. These adhesives normally achieve good electrical conductivity by inclusion metallic fillers such

as silver in the adhesive. Suitable die-attach adhesives are well known in the art and may be obtained from Quantum Materials of San Diego, California, from Ablestik division of National Starch and Chemical, and EpoTek of Billerica, Massachusetts. Alternatively, solder may be used as a means of attaching the LED chip to the heat extraction member in some embodiments. Whether attached by electrically conductive adhesive or solder, the bond establishes good electrical and thermal conductivity between the emitter and the heat extraction member. In the case where the emitters having electrodes manifest as conductive bond pads at the top of the LED chips rather than at their base, the electrical attachment of all of the electrodes is by wire bond rather than by die attach to the heat extraction member.

The semiconductor optical radiation emitters comprise any component or material that emits electromagnetic radiation having a wavelength between 100 nm and 2000 nm by the physical mechanism of electroluminescence, upon passage of electrical current through the material or component. For purposes of generating headlamp illumination, different emitters can be used in the wells to generate the light, such as: all amber emitters the wells; or amber and cyan emitters positioned in each of the wells; or red-orange and cyan emitters placed in each of the wells; or cyan and amber emitters placed in some of the wells and red-orange and cyan emitters in other wells; phosphorous emitters in each of the wells; or the like. It is envisioned that four out of the five wells can have blue-green and amber emitters and one in five wells can have red-orange and amber emitters. Such an arrangement will produce a white light for illuminating the path of the vehicle.

The semiconductor optical emitter may comprise a light emitting diode (LED) chip or die as are well known in the art, light emitting polymers (LEPs), polymer light emitting diodes (PLEDs), organic light emitting diodes (OLEDs) or the like. Such materials and optoelectronic structures made from them are electrically similar to traditional inorganic materials known to those skilled in the art, and are available form a variety of different sources. Semiconductor optical radiation emitter, or emitter, as used herein refers to each of these and their equivalents. Examples of emitters suitable for headlamps include AlGaAs, AlInGaP, GaAs, GaP, InGaN, SiC, and may include emissions enhanced via the physical mechanism of fluorescence by the use of organic or inorganic dies or phosphors. LED chips suitable for use in the present invention are made by companies such as Hewlett-Packard, Nichia Chemical, Siemans Optoelectronics, Sharp, Stanley, Toshibe, Lite-On, Cree Research, Toyoda Gosei, Showa Denko, Tyntec, and others. Such chips are typically fashioned approximately in square base between 0.008" and 0.016" long on each

side, a height of about 0.008" to 0.020". To implement the headlamp, a larger chip having a square base larger than 0.020" may be used, and in particular it is advantageous to have a size greater that 0.025" to 0.035" to generate light. An array of such emitters mounted to a substantial heat sink permits an LED lamp to generate sufficient light to operate as a vehicle headlamp. Details of an emitter that can be used can be found in U.S. Patent Application No. 09/426,795, filed on October 22, 1999, entitled SEMICONDUCTOR RADIATION EMITTER PACKAGE, by John K. Roberts et al. An electrical path for supplying control signals to the emitters is provided through conductors. The conductors are electrical strips applied to a surface of an insulative layer. The insulative layer being mounted to the top surface of the heat sink. The insulative layer may be a circuit board including openings over the cups, or it may comprise an epoxy or plastic layer. The conductor may be any suitable electrically conductive material such as copper, aluminum, an alloy, or the like, and may advantageously comprise circuit traces applied to the insulating material by conventional means. The circuit traces disclosed in Fig. 26a illustrate a pattern that may be used where separate supply is provided for the different emitters.

An encapsulant is a material or combination of materials that serves primarily to cover and protect the semiconductor optical radiation emitter and wire bonds. The encapsulant is transparent to wavelengths of radiation. For purposes of the present invention, a substantially transparent encapsulant refers to a material that, in a flat thickness of 0.5 mm, exhibits greater than 20 % total transmittance of light at any wavelength in the visible light range between 380nm and 800nm. The encapsulant material typically includes a clear epoxy or other thermoset material, silicone or acrylate. Alternatively, the encapsulant may conceivably include glass or thermoplastic such as acrylic, polycarbonate, COC or the like. The encapsulant may include materials that are solid, liquid or gel at room temperature. The encapsulant may include transfer molding compounds such as NT 300H, available form Nitto Denko, or potting, encapsulation or other materials which start as a single part or multiple parts and are processed with a high temperature cure, two part cure, ultra-violet cure, microwave cure, or the like. Suitable clear encapsulants may be obtained from Epoxy Technology of Billerica, Massachusetts, from Nitto Denko America, Inc., of Fremont, California, or from Dexter Electronic Materials of Industry, California.

The encapsulant may provide partial optical collimation or other beam formation of electromagnetic energy emitted by the emitter and or reflected by the surface of heat

extraction member. The encapsulant also serves as a chemical barrier, sealant, and physical shroud providing protection of emitters, internal adhesives such as bonds, bond pads, conductor wires, wire bonds and internal surfaces of heat extraction member and electrical leads from environmental damage due to oxygen exposure, exposure to humidity or other corrosive vapors, solvent exposure, mechanical abrasion or trauma, and the like. Encapsulant provides electrical insulation. Encapsulant may also provide for attaching or registering to adjacent components such as secondary optics, support members, secondary heat extractors, and the like.

The encapsulant may comprise a heterogeneous mass of more than one material, wherein each material occupies a portion of the overall encapsulant volume and provides a specialized function or property. For example, a stress relieving gel such as a silicone "glob top" may be placed over the emitter and wire bonds. Such a localized stress relieving gel remains soft and deformable and may serve to cushion the emitter and wire bonds from stress incurred during subsequent processing of the component or due to thermal expansion to shock. A hard molding compound such as an epoxy, may then be formed over the stress relieving gel to provide structural integration for the various features of the component, to retain the electrical leads, to protect the internal mechanisms of the component from environmental influences, to electrically insulate the semiconductor radiation emitters, to provide various optical moderation of radiant energy emitted by the emitter if desired.

Additionally, the filler used within the stress relieving gel may advantageously include a high thermal conductivity material such as diamond powder. Diamond is a chemically inert substance with an extremely high thermal conductivity. The presence of such a material may significantly increase the thermal conductivity of the gel and provide an additional path for heat generated in the emitter chip to reach the heat extraction member and ambient environment where it can be dissipated. Such additional heat extraction path will increase the efficiency of the emitter, and thus the light output of the lamp. The encapsulant, and manufacture of a device using such an encapsulant is described in greater detail in U.S. Patent Application No. 09/426,795.

A steerable light emitting diode headlamp 2700 is illustrated in Fig. 27. The headlamp includes a heat extraction member 2701 having two lamp sections 2703 and 2705. The heat extraction member 2701 is configured to include the two lamp sections

2703 and 2705 each of which is substantially identical to lamp 2601, presenting two front faces at an angle of 5° to 45°, and may advantageously be angled at approximately 15°.

Another alternative design for a headlamp for providing low and high beams is illustrated in Fig. 28. The headlamp 2800 includes a heat extraction member 2801 having two lamp sections 2803 and 2805. The heat extraction member 2801 is configured to include the two lamp sections 2803 and 2805, each of which is substantially identical to lamp 2601. The heat extraction member provides two front faces at an angle of 1° to 2°, and may advantageously be angled at approximately 1.5°. The angle is exaggerated in Fig. 28 so that the angled surfaces are readily visible.

By controlling the selection of the LEDs that are illuminated, the headlamps can be aimed. It is also envisioned that the front of the car can have LED chips positioned in a bar running across the front grill.

Whereas the above embodiment takes advantage of directly mounting a number of chips on a common heat sink, it is also envisioned that an array of discrete LED lamps can be used to implement an LED headlamp 2650 (Figs. 26c and 26d). Each discrete LED lamp preferably includes a heat extraction member for dissipating power generated by the emitters to obtain a brighter light level without damaging the LED components. A particularly advantageous high power LED lamp which is uniquely adapted for conventional manufacturing processes is disclosed in U.S. Patent Application No. 09/426,795, entitled SEMICONDUCTOR RADIATION EMITTER PACKAGE, filed on October 22, 1999, by John K. Roberts et al. Other LED lamps that could be used are commercially available from LED manufacturers such as Hewlett Packard Company.

The LED lamps 2650 (only some of which are numbered) are mounted to a circuit board 2652 and heat sink 2654 (Fig. 26d). The circuit board can provide a secondary heat sink, where the conductive layer 2660 of the circuit board exposed to ambient air, by thermally coupling the heat extraction member 2664 of each LED lamp to the conductive layer 2662 of the circuit board. The heat extraction member of the LED lamp is also thermally coupled to the heat sink 2654. In the illustrated embodiment of Figs. 26c and 26d, the thermally conductive material 2670 is positioned in a hole through the circuit board below the heat extraction member. The thermally conductive material is thicker than the circuit board, and resilient. For example, the thermally conductive material can be provided using a preformed thermal coupler such as a silicon based, cut resistant material commercially available from Bergquist, and identified as Silipad 600. Packages

for LED lamps using the heat extraction member are disclosed in U.S. Patent Application No. 09/425,792, entitled INDICATORS AND ILLUMINATORS USING A SEMICONDUCTOR RADIATION EMITTER, filed on October 22, 1999, by John K. Roberts et al.

Where red-green-blue or binary complementary lighting is used, it is envisioned that only selected chips will be flashed OFF when attempting to distinguish reflective objects from lamps. Thus, for binary complementary emitters, only amber emitters need to have a briefly reduced intensity. Additionally, it will be recognized that instead of turning the headlamps OFF, the light level can be reduced to a level at which reflections will be below the pixel threshold at which the image sensor assembly will detect an object.

Other LED device/component structures that may be employed are disclosed in commonly assigned U.S. Provisional Application No. _____ (Attorney Docket No. GEN10 PP375), entitled HIGH POWER RADIATION EMITTER DEVICE AND HEAT DISSIPATING PACKAGE FOR ELECTRONIC COMPONENTS, filed on February 1, 2001, by John K. Roberts et al. and in commonly assigned U.S. Provisional Application No. _____ (Attorney Docket No. GEN10 PP391), entitled RADIATION EMITTER DEVICES AND METHOD OF MAKING THE SAME, filed on January 22, 2001, by John K. Roberts et al.

SURFACE MOUNTED FILTER FOR SENSOR

A method by which a filter can be directly deposited onto a semiconductor light sensor 201 will now be described with respect to Figs. 29a through 29d. In the first step, a photoresist 2877 is deposited over the entire wafer 2972. The photoresist may be any suitable commercially available photoresist material. Portions of the photoresist may be removed such that the remaining photoresist 2877 is patterned to cover only those areas on the surface of the wafer requiring protection from the optical coating deposition, such as the bonding pad 2975, as shown in Fig. 29b. The optical film coating 2979 is then applied to the surface of the die 2972 as shown in Fig. 29c.

The thin film 2979 is deposited directly on the light sensor 2932 in multiple layers. The red and cyan filters, if red and cyan filters are desired, will be applied separately. An example of a cyan filter will be now be described. To make a cyan filter, the layers of titanium dioxide (TiO_2) and silicon dioxide (SiO_2) described in Table 1 can be used. To make a red filter, the layers described in Table 2 can be used. The layer number is the

order in which the material is applied to the wafer surface.

Table 1

Layer	Material	Thickness(nm)
1	SiO_2	170
2	TiO_2	124
3	SiO_2	10
4	TiO_2	134
5	SiO_2	160
6	TiO_2	79
7	SiO_2	164
8	TiO_2	29
9	SiO_2	168
10	TiO_2	68
11	SiO_2	164
12	TiO_2	33
13	SiO_2	163
14	TiO_2	69
15	SiO_2	154
16	TiO_2	188
17	SiO_2	148
18	TiO_2	88
19	SiO_2	319

Table 2

Layer	Material	Thickness(nm)
1	TiO_2	68
2	SiO_2	64
3	TiO_2	35
4	SiO_2	138
5	TiO_2	57
6	SiO_2	86
7	TiO_2	50
8	SiO_2	78
9	TiO_2	73
10	SiO_2	94
11	TiO_2	54
12	SiO_2	89
13	TiO_2	52
14	SiO_2	87
15	TiO_2	50
16	SiO_2	74
17	TiO_2	28
18	SiO_2	61
19	TiO_2	49
20	SiO_2	83
21	TiO_2	48
22	SiO_2	78
23	TiO_2	48
24	SiO_2	91

After all of the layers are deposited, the photoresist is lifted off using a conventional lift off process, leaving the film deposited over the light sensitive region, but not over the bonding pads, as shown in Fig. 29d. The resulting die can be encapsulated to provide the image array sensor in conventional packaging.

The characteristics of the filters produced according to Table 1 and Table 2 are illustrated in Figs. 30 and 31. In particular, the red filter will attenuate light below 625 nm whereas the blue filter will pass light between approximately 400nm and 625 nm. Both filters will pass light above 800 nm. An infrared filter can be utilized to reduce the effect of infrared light on the performance of the headlamp dimmer.

Those skilled in the art will recognize that the filters described herein are exemplary, and that other filters, materials, or material thickness could be used to implement the filter function. Other materials could be applied in a similar manner to provide these or other filter characteristics.

Those skilled in the art will also recognize that the layer thicknesses are rounded to the nearest nanometer. Although there will be some tolerance permitted, good precision in the stack construction is required. It will also be recognized that the layer thicknesses are exemplary. By surface mounting the filters, the cost of providing the image sensor can be greatly reduced, as components and manufacturing complexity are reduced. Additionally, an infrared filter can be applied as a coating between the pixels and the red and blue filters.

PACKAGE

An alternate optical sensor assembly 3200 is disclosed in Fig. 32. Optical sensor assembly 3200 includes a base substrate 3202, which is transparent. The substrate may be manufactured of any suitable material such as a transparent polymer, glass, or the like. Alternately, it is envisioned that the base substrate may be manufactured of a commercially available infrared interference filter such as those described hereinabove. Alternatively, a thin film filter may be attached to a transparent glass element to make the base substrate 3202.

The lower surface of the base substrate has conductive strips 3210 for connection to the image array sensor 3212. The base substrate is preferably an electrical insulator, whereby the strips can be any suitable electrically conductive material applied directly to the lower surface of the base substrate by conventional manufacturing processes. Alternatively, if the base substrate is an electrical conductor, the strips can be applied to an electrical insulator, which is in turn applied to the base substrate.

The image array sensor 3212 is flip chip bonded to the lower surface of the base substrate 3202 by soldering pads 3211. A dielectric material 3214, such as an epoxy, encloses the image array sensor. The dielectric material preferably bonds with the conductive strips 3210 and the transparent element 3202. Clips 3204 and 3206 clip onto the edges of the base substrate and make electrical contact with respective conductive strips 3210. A respective clip can be provided for each of the conductive strips 3210. Leads 3213, 3215 extend from the clips for insertion into support substrate 3201, which can be a printed circuit board, a housing, or the like. The support substrate is preferably a printed circuit board carried in a housing, such as a rearview mirror mount housing. The stops 3205, 3207 limit the length of the leads that can be inserted into the support substrate. Alternatively, the clips can be configured for surface mounting. Examples of surface mountable clips include NAS Interplex Edge Clips, from NAS Interplex, an Interplex Industries Company located in Flushing, New York, USA.

Packages for mounting the image array sensor are described in U.S. Patent No. 6,130,448, OPTICAL SENSOR PACKAGE AND METHOD OF MAKING THE SAME, filed on August 21, 1998, by Fred Bauer et al.

The assembly of the lens to the base substrate can be provided in the same manner as described hereinabove. In particular, the lens structure is carried on the base substrate 3202. The lens structure can be identical to the lens structure 202, and thus can be half clear and half red, or half cyan and half red, or entirely clear where a color filter is applied directly to the surface of the image sensor as described above with respect to Figs. 29a-29d. To make the lens assembly, a transparent member and a UV curable adhesive can be used. The transparent member can be an epoxy member like members 230, 802. The UV curable adhesive can be identical to adhesive 232.

RADAR

A wave transceiver 101 (Fig. 1) can be used to acquire additional intelligence usable for controlling the operation of the controlled vehicle 100. The wave transceiver can be used without the image array sensor 102, or it can be used with the image array sensor. The wave transceiver device 101 is mounted on a vehicle 100 and oriented in a generally forward direction. The wave transceiver device 101 is positioned to receive the reflections of waves emitted by the transceiver device after they have reflected off objects in front of the vehicle 100. The wave-emitting device may be a radar system operating, for example, in a frequency range exceeding 1 GHz (77 GHz is designated for vehicular radar in many European countries) or an optical radar utilizing, for example, laser diodes for the wave-emitting device. Alternatively, the wave-emitting device 101 may be an ultrasonic transducer emitting ultrasonic waves. The wave-emitting device may be scanned across the forward field to cover various angles. For the purposes of this invention, the term "radar" will be used to encompass all of these concepts. The wave transceiver should not be interpreted as being limited to any specific type or configuration of wave transmitting or wave receiving device. The transmitter and receiver may each be mounted within a different respective housing or they both may be mounted in a common housing.

A radar processing system 3300 (Fig. 33) controls the wave transmitting section 3301, 3302 and interprets the signal received by the wave receiving section 3304, 3305 to determine the presence of objects as well as the speed and direction of such objects. A headlamp controller 3303 receives target information from the radar processing system, and may optionally also receive signals from the vehicle speed sensor (such as a

speedometer) and a vehicle direction sensor (such as a compass) and generates a control signal which determines the state of the vehicle headlamps 111. The communication between the radar processing system, the vehicle speed sensor, the vehicle direction system and the vehicle headlamps may be by one of many mechanisms including direct wiring through a wiring harness or by a vehicle communication bus such as the CAN bus. Additionally, systems such as the radar processing system and the headlamp controller may be implemented by a single integrated processor, multiple processors, digital signal processors, microcontrollers, microprocessors, programmable logic units, or combinations thereof.

More particularly, the system contains a radar system that includes a wave transmitting section and a wave receiving section. The wave transceiver 101 includes an emitter 3301 and a receiver 3304. The transmitter may be implemented using an antenna for a conventional radar, a light source for optical radar, an ultrasonic emitter, an antenna system for a Doppler radar system, or the like. The receiver 3304 may be implemented using an antenna in a conventional radar system, a light receiving element in an optical radar system, an ultrasonic receiver, a wave guide antenna in a Doppler radar system, or the like. A driver 3302 is connected to the emitter 3301 to condition signals from controller 3303 so that emitter 3301 produces signals, which, when reflected, can be detected by the receiver 3304. The driver 3302 may be implemented using a pulse modulator, a pulse shaper, or the like. The receiver 3304 is connected to a conditioning circuit 3305 which conditions the signals detected by the receiver for further processing by controller 3303. The conditioning cirucit may include a demodulator, a filter, an amplifier, an analog-to-digital converter (ADC), combinations thereof, and the like. The controller 3303 may be implemented using a microprocessor, a digital signal processor, a microcontroller, a programmable logic unit, combinations thereof, or the like.

The operation of radars to determine the presence of objects relative to a vehicle are well known, and will not be described in greater detail hereinbelow. For example, the time between the transmitted wave and the detection of the reflected wave may be used to determine the distance of an object. The movement of an object over successive transmission/reception cycles may be used to determine an object's relative speed and direction. Doppler radar may also be used to determine the objects speed. The magnitude of the reflected wave may be used to determine the size or density of the detected object. Operation of radars is well known, and will not be described in greater detail herein.

In order to properly control the high beam state of the controlled vehicle 100 it is necessary to determine if an object detected by the radar is a vehicle or a stationary object and, if a vehicle, whether the vehicle is an oncoming vehicle 105 or preceding vehicle 110. This can be accomplished by comparing the speed and direction of the object with the speed and direction of the controlled vehicle 100. The speed and direction of travel of the object is obtained using the radar principles described above. The speed of the controlled vehicle 100 may be obtained from a speed sensor on the vehicle, a global positioning system (GPS) system, or the like. The direction of the control vehicle 100 may be obtained from a compass sensor, a steering wheel turn indicator, a GPS, or the like.

Once this information is obtained, a simple set of criteria is applied to determine if the object is a vehicle or a stationary object. If an object is stationary, it will be moving in a direction opposite the controlled vehicle 100 at the same speed as the controlled vehicle. If an object is an oncoming vehicle 105, it will be traveling in a direction approximately opposite the controlled vehicle 100 at a speed substantially faster than that of the controlled vehicle. Finally, if an object is not moving relative to the controlled vehicle or the object is moving at a rate substantially slower than the controlled vehicle, the object is likely a preceding vehicle 1110. The distance at which the high beams are dimmed may be a function of the speed of the controlled vehicle and may be a function of the angle between an axis straight forward of the controlled vehicle 100 and the oncoming vehicle 105 or preceding vehicle 110.

In a more advanced system the headlamp control system not only controls the high/low beam state of the headlamps 3311, 3312 and high beam lamps 3314, 3315 based on the presence of one or more vehicles, but may vary the brightness of the high beam headlamps and low beam headlamps to provide a continuous transition between the two beams as a function of the distance to the nearest other vehicle, thus maximizing the available luminance provided to the driver of the controlled vehicle without distraction to the other driver. A continuously variable headlamp system is disclosed in U.S. Patent No. 6,049,171 entitled CONTINUOUSLY VARIABLE HEADLAMP CONTROL, filed on September 18, 1998, by Joseph S. Stam et al. The system may also vary the aim of the controlled vehicle headlamps in the vertical direction. The system may be configured to transition between more than two beams or may be configured to perform a combination of aiming and varying the brightness or one or more lamps. The headlamp processing system may also use the vehicle direction input to determine the proper horizontal aim of

the headlamps to provide better illumination when traveling on curves. An LED headlamp that facilitates aiming is described above.

A light sensor 3320 can be used to detect ambient light levels and may optionally provide other light conditions. The light sensor may be implemented using a non-imaging sensor such as a silicon photodiode, a particularly advantageous photodiode disclosed in U.S. Patent Application No. 09/237,107, entitled PHOTODIODE LIGHT SENSOR, filed by Robert Nixon et al., although other non-imaging photocells could be used such as cadmium sulphide (CdS) cells, or the like. The light sensor 3320 can be alternately be implemented using an optical image sensor 102 in addition to, or instead of, a non-imaging light sensor.

The optical system may contain filters to determine the color of a light source. The combination of an optical system with a radar system may better overcome the limitations present if only one or the systems are used independently. For example, if a radar system is used independently of an imaging system, an oncoming or preceding vehicle waiting at an intersection would be perceived by the radar system as a stationary object. However, by combining an optical sensor with the radar system, the lights on the waiting vehicle would indicate that a vehicle is present and the radar can determine the actual distance to the vehicle. In general, if an optical system is used, the optical system may be used to determine the presence of oncoming or preceding vehicles and the radar system may be used to determine the actual distance to such oncoming or preceding vehicle as well as the speed of that vehicle. In this manner, the radar detector and the imaging sensor can be used to verify the presence of other objects. Additionally, the light sensors can be used to determine light conditions, such as ambient light levels.

The presence of the radar system on the vehicle may enable other features other than headlamp control to be implemented utilizing the same components as the headlamp radar, thus reducing the cost of the two systems combined. Such system may include, for example, adaptive cruise control, obstacle warning systems, collision avoidance systems, autonomous driving systems, or the like. In this case, the wave transmitting section, wave receiving section, and radar processing systems could be shared by all features while each feature has its own processing system for determining a course of action based upon the information received from the radar processing system. It is also possible to integrate the processing systems from each feature into a single processor.

A radar system is described in U.S. Patent Application No. 09/531,211, entitled AUTOMATIC HEADLAMP CONTROL SYSTEM.

MIRROR MOUNT ACCESSORY HOUSING

A preferred mounting structure for mounting the headlamp dimmer system of the present invention is shown in Figs. 41-49. As illustrated, this structure includes a mount 4101 having a slot 4103 for receiving a mounting puck (not shown) that is adhesively secured to the vehicle windshield. An aperture 4105 is formed in mount 4101 and opens into slot 4103 to allow a mount screw 4107 to extend through aperture 4105 and engage a surface of the mounting puck so as to securely hold mount 4101 on the puck and thus on the vehicle windshield. Mount 4101 includes a ball 4109 to which the socket of a mirror mounting stem (not shown) may be secured in conventional fashion. The mounting stem may be secured to a similar ball extending from the rearview mirror housing or the stem may include a ball for engaging a socket formed in the mirror housing body.

As described in more detail below, a mirror mount accessory housing 4111 is secured to mount 4101 and includes a housing cover 4113 consisting of a right half portion 4113a and a left half portion 4113b. As best shown in Fig. 44, mount 4101 includes a plurality of laterally extending pegs 4115, which are inserted in corresponding holes 4117 provided in housing cover portions 4113a and 4113b. Additionally, housing cover portions 4113a and 4113b include resilient tabs 4119, which extend through a pair of slots 4121 on mount 4101 to securely hold housing cover 4113 on mount 4101. Housing cover portions 4113a and 4113b further include a plurality of tabs 4123 and a plurality of slotted tongues 4125, which snap together to thereby hold together portions 4113a and 4113b. Housing portion 4113a includes a forward facing aperture 4127 in which a glass filter 4129 may be mounted. As explained further below, aperture 4127 and glass filter 4129 provide a window through which the inventive camera senses images.

The inventive mirror mount accessory housing structure further includes a baffle/printed circuit board (PCB) holder 4130 (also generally referred to herein as a support structure) that is adjustably mounted to mirror mount 4101 and contained within housing cover 4113. As shown in Fig. 44, baffle/PCB holder 4130 includes a pair of slots 4133 for engaging laterally extending pins 4135 on mirror mount 4101. Baffle/PCB holder 4130 further includes a pair of elongated slots 4137 through which screws 4139 are inserted. Screws 4139 extend through slots 4137 and are threadably engaged in holes 4141 provided in mount 4101. By providing slots 4137 as elongated apertures, the tilt of baffle/PCB holder 4130 may be selectively adjusted relative to mount 4101. Such tilt adjustability is desirable given the variance of the slope of vehicle windshields from one model to another. As discussed further below, the image sensor and its associated circuit

board is securely mounted to baffle/PCB holder 4130, and thus, the image sensor tilt relative to the vehicle windshield may be adjusted by adjusting the tilt of baffle/PCB holder 4130.

As illustrated in Fig. 44, baffle/PCB holder 4130 includes a baffle 4143 similar to the baffle discussed above. A forward end of baffle 4143 is positioned proximate aperture 4127 and glass filter 4129 while an image sensor 4145, which includes image chip 201, encapsulation block 230, UV cure epoxy 232, lens 202, and an aperture stop 203, as shown in Fig. 2a), extends into the opposite and rearward end of baffle 4143. Image sensor 4145 is mounted on a PCB 4147 having a connector 4149 mounted thereon. Also mounted on PCB 4147 is an image sensing die (not shown), which functions as a sky sensor in the manner discussed above. To provide light from a skyward view relative to the vehicle, a light pipe 4151 is mounted over the die on PCB 4147 within a light pipe mount 4153, which engages a corresponding light pipe support 4155 on baffle/PCB holder 4130. Light pipe 4151 includes a pair of laterally extending protrusions 4157 that engage corresponding apertures 4159 in a light pipe filler 4161, which has an aperture 4163 through which the distal end of light pipe 4151 extends. Light pipe filler 4161 is mounted within an aperture 4165 formed in an upper surface of housing cover 4113. As will be apparent to those skilled in the art, light pipe 4151 captures the skyward light in its distal end that extends through filler 4161 towards the sky, and the skyward light is then directed through light pipe 4151 to the die on PCB 4147.

As discussed above, a processor may be mounted on PCB 4147 to preprocess some of the image data obtained from image sensor 4145.

A compass PCB 4171 may optionally be mounted within the inventive housing structure 4111. Compass PCB 4171 includes a pair of compass sensors 4173, which may be magneto resistive sensors, magneto inductive sensors, flux-gate sensors, or the like. By mounting compass PCB 4171 on baffle/PCB holder 4130, the relative tilt of sensors 4173 may be adjusted relative to the vehicle horizontal to ensure accurate sensing. Compass PCB 4171 includes a connector (not shown) to which a corresponding connector 4175 may be coupled. Connector 4175 connects compass PCB 4171 to a processor (not shown) in the mirror body via cable 4177. Cable 4177 also connects the same or a different processor within mirror body to PCB 4147 via a coupler 4179 and coupler 4149. A pair of resilient prongs 4181 of a clip structure 4183 is disposed behind PCB 4147 and secures to baffle/PCB holder 4130. Baffle/PCB holder 4130 includes a lateral extension 4187, which extends around connectors 4149 and 4179 and provides a ledge upon which resilient

prongs 4181 may latch to secure the clip 4183 and PCB 4147 to baffle/PCB holder 4130 and to assist in securing the engagement of couplers 4149 and 4179.

The above-described mounting structure provides several advantageous features. Specifically, the tilt angle of the image sensor may be selectively adjusted while not requiring movement of the housing cover relative to the mirror mount. This avoids the need to have mounting screws accessible from the exterior of the housing and thus reduces the possibility of someone tampering with the adjustment subsequent to final adjustment by the manufacturer. Further, the interior components shown in Figs 46-49 may be secured to mirror mount 4101 after it has been secured to the vehicle windshield and the adjustment may then be made with the housing cover subsequently snapped into place following final adjustment.

An additional advantage is provided by the use of light pipe 4151. In the absence of light pipe 4151, an additional circuit board would need to be mounted at an angle relative to PCB 4147 to aim the die mounted on such an inclined PCB towards the sky above the vehicle.

Although the mirror mount accessory housing has been described for mounting an image sensor, sky sensor, and compass sensors, it will be appreciated that any one or combination of these components may be disposed in the housing. Further, other components may be disposed in the housing in addition to, or in place of, any or all of the above components.

While the present invention has generally be described as preferably utilizing the full capability of the exterior lights to produce a large number of potential beam patterns that may change discretely or through a continuum, it is possible to use the system to simply turn headlamps on and off, as disclosed, for example, in U.S. Patent Application No. 09/491,192, entitled VEHICLE EQUIPMENT CONTROL WITH SEMICONDUCTOR LIGHT SENSORS, filed by Jon Bechtel et al. on January 25, 2000.

While the invention has been described in detail herein in accordance with certain embodiments thereof, many modifications and changes may be effected by those skilled in the art without departing from the spirit of the invention. Accordingly, it is intended that the appended claims not be limited by way of details and instrumentalities describing the embodiments shown herein.

CLAIMS

The invention claimed is:

1. A control system to control exterior lights of a controlled vehicle comprising:

an imaging system configured to image the scene forward of the controlled vehicle; and

a control circuit for processing the image of the scene obtained from said imaging system and for controlling the exterior lights to change their beam pattern in response to objects detected in the processed scene, said control circuit disables automatic control of the exterior lights in response to activation of the vehicle windshield wipers.

2. The control system of claim 1, wherein said control circuit is coupled to receive a signal from said windshield wipers when they are activated.

3. The control system of claim 1, wherein said control circuit determines that the windshield wipers are activated upon detecting a wiper within the scene imaged by said imaging system.

4. The control system of claim 1, wherein said control circuit determines that the windshield wipers are activated upon receiving a wiper activation signal from a rain sensor provided in the vehicle.

5. The control system of claim 1, wherein said imaging system is disposed in a rearview mirror assembly.

6. The control system of claim 1, wherein said control circuit changes the beam pattern of the exterior lights by turning on or off at least one of the exterior lights.

7. The control system of claim 1, wherein said control circuit changes the beam pattern of the exterior lights by continuously varying the brightness of at least one of the exterior lights.

8. The control system of claim 1, wherein the exterior lights include headlamps operable in at least high and low beam states, and wherein said control circuit prevents the headlamps from operation in a high beam state when the vehicle windshield wipers are activated.

9. The control system of claim 1, wherein said control circuit is responsive to the speed of the windshield wipers to disable automatic control of the exterior lights when the windshield wipers are operating above a threshold speed.

10. The control system of claim 1, wherein the exterior lights include foul weather lights and said control circuit activates the foul weather lights when the vehicle windshield wipers are activated.

11. The control system of claim 10, wherein the foul weather lights include fog lights and said control circuit activates the fog lights when the vehicle windshield wipers are activated.

12. A control system to control exterior lights of a controlled vehicle comprising:

an imaging system configured to image the scene forward of the controlled vehicle; and

a control circuit for processing the image of the scene obtained from said imaging system and for controlling the exterior lights to change their beam pattern in response to objects detected in the processed scene, said control circuit disables automatic control of the exterior lights when fog is detected on the windshield.

13. The control system of claim 12, wherein fog is detected to be on the windshield when the vehicle windshield defroster is operating at a speed above a threshold.

14. The control system of claim 12, wherein said imaging system is disposed in a rearview mirror assembly.

15. The control system of claim 12, wherein said control circuit is disposed in a rearview mirror assembly.

16. The control system of claim 12, wherein the exterior lights include headlamps operable in at least high and low beam states, and wherein said control circuit prevents the headlamps from operation in a high beam state when the vehicle windshield defroster is operating at full speed.

17. The control system of claim 12, wherein said control circuit changes the beam pattern of the exterior lights by turning on or off at least one of the exterior lights.

18. The control system of claim 12, wherein said control circuit changes the beam pattern of the exterior lights by continuously varying the brightness of at least one of the exterior lights.

19. The control system of claim 12, wherein the exterior lights include foul weather lights and said control circuit activates the foul weather lights when the vehicle windshield defroster is operating at full speed.

20. The control system of claim 19, wherein the foul weather lights include fog lights and said control circuit activates the fog lights when the vehicle windshield defroster is operating at full speed.

21. A method of detecting snowfall or fog outside a vehicle comprising the steps of:

sensing light levels forward of the vehicle and light levels above the vehicle;

comparing the relative brightness of the light levels forward and above the vehicle; and

determining that it is snowing or foggy when a ratio of the relative brightness forward of the vehicle to that above the vehicle reaches a threshold.

22. The method of claim 21, wherein the relative brightness of the light levels forward and above the vehicle are compared as the brightness of the vehicle's headlamps is increased.

23. A control system to control exterior lights of a controlled vehicle comprising:

a light sensing system configured to sense light levels forward of the controlled vehicle; and

a control circuit for light levels obtained from said sensing system and for controlling the exterior lights to change their beam pattern in response to the obtained light levels, said control circuit disables automatic control of the exterior lights when snow is detected.

24. The control system of claim 23, wherein said sensing system senses light levels forward of the vehicle and above the vehicle.

25. The control system of claim 24, wherein said sensing system includes a single pixel sensor for sensing the light level above the vehicle.

26. The control system of claim 25, wherein said sensing system includes a second sensor for sensing the light level forward of the vehicle.

27. The control system of claim 26, wherein said single pixel sensor is positioned at about a 45° angle relative to said second sensor.

28. The control system of claim 24, wherein said sensing system includes a second sensor for sensing the light level forward of the vehicle.

29. The control system of claim 24, wherein said control circuit compares the relative brightness of the light forward of the vehicle with that of the light above the vehicle as the brightness of the vehicle's headlamps increases, and determines that it is snowing when the ratio of relative brightness forward of the vehicle to that above the vehicle reaches a threshold.

30. The control system of claim 23, wherein the exterior lights include headlamps operable in at least high and low beam states, said control circuit disables the headlamps from operation in a high beam state when the vehicle windshield defroster is operating at full speed.

31. The control system of claim 23, wherein the exterior lights include headlamps operable in at least high and low beam states, said control circuit disables the headlamps from operation in a high beam state when the vehicle windshield wipers are activated.

32. The control system of claim 25, wherein said single pixel sensor senses the ambient light outside of the vehicle, and said control circuit varies the brightness of daytime running lamps in response to the ambient light level sensed by said single pixel sensor.

33. The control system of claim 23, wherein the exterior lights include daytime running lights, said imaging system comprising an ambient light sensor for sensing the ambient light outside of the vehicle, and said control circuit varies the brightness of daytime running lamps in response to the ambient light level sensed by said ambient light sensor.

34. The control system of claim 23, wherein said imaging system includes an image array sensor including a plurality of pixels, and an optical system configured to image the scene forward of the controlled vehicle onto said image array sensor, said optical system including a forwardmost surface, said optical system includes a hydrophilic coating on said forwardmost surface.

35. The control system of claim 23, wherein the exterior lights include headlamps operable in at least high and low beam states, said control circuit disables the operation of the headlamps in the high beam state when it is snowing.

36. A method of controlling vehicle headlamps comprising the steps of:
detecting whether it is snowing; and
disabling the headlamps from operation in a high beam state when it is snowing.

37. A control system to control the brightness of the tail lights of a vehicle comprising:
an ambient light sensor for sensing the ambient light outside of the vehicle; and
a control circuit for varying the brightness of the tail lights in response to the ambient light level sensed by said ambient light sensor.

38. The control system of claim 37, wherein said ambient light sensor is disposed in a rearview mirror assembly.

39. The control system of claim 37, wherein said control circuit is disposed in a rearview mirror assembly.

40. A headlamp control system for controlling the headlamps of a controlled vehicle, said headlamp control system comprising:

an imaging system configured to image the scene forward of the controlled vehicle;

a control circuit coupled to said imaging system for identifying and determining the brightness of light sources in images obtained from said imaging system and for controlling the headlamps to vary a beam pattern of the headlamps as a function of the brightness of light sources within the images; and

a user input mechanism coupled to said control circuit for allowing a user to adjust a sensitivity at which said control circuit will control the headlamps in response to light sources within the images.

41. The headlamp control system of claim 40, wherein said imaging system is disposed in a rearview mirror assembly.

42. The headlamp control system of claim 40, wherein said control circuit is disposed in a rearview mirror assembly.

43. The headlamp control system of claim 40, wherein said imaging system includes a plurality of sensors that integrate the light levels sensed during a predetermined integration time period, said control circuit adjusts the integration time period of said sensors in response to user adjustment of the sensitivity.

44. The headlamp control system of claim 40, wherein said control circuit adjusts the brightness of the headlamps when the brightness of light sources in the obtained images exceeds a threshold, said control circuit varies said threshold in response to user adjustment of the sensitivity.

45. The headlamp control system of claim 40, wherein said control circuit continuously varies the brightness of the headlamps as a function of the brightness of light sources within the images, said control circuit changes a rate at which the brightness of the headlamps is varied in response to user adjustment of the sensitivity.

46. The headlamp control system of claim 40, wherein said imaging system includes an array of pixel sensors, said control circuit being more sensitive to light sources detected within a predetermined area of the image obtained by said pixel sensor array, said control circuit varies the boundaries of said predetermined area in response to user adjustment of the sensitivity.

47. A headlamp control system for controlling the headlamps of a controlled vehicle, said headlamp control system comprising:

an imaging system configured to image the scene forward of the controlled vehicle and to detect an ambient light level outside the vehicle; and

a control circuit coupled to said imaging system for determining an ambient light level outside the vehicle for identifying and determining the brightness of light sources in images obtained from said imaging system, and for controlling the headlamps to vary a beam pattern of the headlamps as a function of the brightness of light sources within the images when the ambient light level is above a threshold level.

48. The headlamp control system of claim 47, wherein said imaging system includes:

an image array sensor;

an optical system configured to image the scene forward of the controlled vehicle onto said image array sensor; and

an ambient light sensor for sensing the ambient light level outside the vehicle.

49. The headlamp control system of claim 48, wherein said ambient light sensor is aimed generally upward towards the sky above the vehicle.

50. The headlamp control system of claim 47, wherein said imaging system is disposed in a rearview mirror assembly.

51. The headlamp control system of claim 47, wherein said control circuit is disposed in a rearview mirror assembly.

52. A control system to control the headlamps of a vehicle comprising:

an ambient light sensor for sensing the ambient light outside of the vehicle; and

a control circuit for varying the beam pattern of daytime running lamps in response to the ambient light level sensed by said ambient light sensor.

53. The control system of claim 52, wherein said control circuit increases the brightness of the daytime running lights in response to increasing ambient brightness.

54. The control system of claim 52, wherein said ambient light sensor is disposed in a rearview mirror assembly.

55. The control system of claim 52, wherein said control circuit is disposed in a rearview mirror assembly.

56. A control system to control exterior lights of a vehicle comprising:

an image array sensor including a plurality of pixels;

an optical system configured to image the scene forward of the controlled vehicle onto said image array sensor, said optical system including a forwardmost surface; and

a control circuit for processing the image of the scene obtained from said image array sensor and for controlling the exterior lights in response to objects detected in the processed scene,

wherein said optical system includes a hydrophilic coating on said forwardmost surface.

57. The control system of claim 56, wherein said optical system is disposed in a rearview mirror assembly.

58. The control system of claim 52, wherein said control circuit is disposed in a rearview mirror assembly.

59. The control system of claim 52, wherein said optical system further includes a photocatalytic coating proximate said hydrophilic coating.

60. A vehicle control system to control the brightness of continuously variable headlamps that have a brightness that varies continuously between a high beam state and a low beam state, said control system comprising:

an imaging system configured to image the scene forward of the controlled vehicle;

a control circuit for identifying and determining the brightness of light sources in images obtained from said imaging system and for controlling the perceived brightness of the headlamps as a function of the brightness of light sources within the images; and

an indicator coupled to said control circuit and positioned inside the vehicle for indicating to the driver the relative brightness of the headlamps.

61. The vehicle control system of claim 60, wherein said indicator has a brightness that varies in proportion to the brightness of the headlamps.

62. The vehicle control system of claim 60, wherein the brightness of said indicator doubles when the headlamps are in a high beam state as a result of manual activation of the high beams.

63. The vehicle control system of claim 60, wherein said indicator changes color as a function of the brightness of the headlamps.

64. The vehicle control system of claim 60, wherein said indicator includes a scale that indicates a relative brightness of the headlamps.

65. The vehicle control system of claim 64, wherein said indicator scale is a multi-segmented display in which the number of segments that are illuminated correspond to the relative brightness of the headlamps.

66. The vehicle control system of claim 60, wherein said imaging system is disposed in a rearview mirror assembly.

67. The vehicle control system of claim 60, wherein said control circuit is disposed in a rearview mirror assembly.

68. The vehicle control system of claim 60 and further including a second indicator for indicating when said control circuit is automatically controlling the brightness of the vehicle headlamps as a function of the brightness of light sources within the images.

69. An imaging system for a vehicle comprising:

an image sensor having an array of pixels and at least one other component; and

an optical baffle disposed between said image sensor and a scene to be imaged for preventing light from the scene from reaching said at least one other component.

70. The imaging system of claim 69, wherein said image sensor is a CMOS sensor.

71. The imaging system of claim 69, wherein said image sensor is disposed in a rearview mirror assembly.

72. A control system for controlling exterior lights of a controlled vehicle, said control system comprising:

an imaging system configured to image the scene forward of the controlled vehicle;

a switching mechanism for manual input of a driver's selection of a feature affecting the control of the exterior lights; and

a control circuit coupled to said switching mechanism and said imaging system for identifying and determining the brightness of light sources in images obtained from said imaging system and for controlling the exterior lights to vary the beam pattern of the exterior lights as a function of the brightness of light sources within the images and as a function of the status of said switching mechanism.

73. The control system of claim 72, wherein the exterior lights include headlamps and said switching mechanism includes a switch that allows a driver to select manual or automatic control of the vehicle headlamps.

74. The control system of claim 72, wherein, in response to selection of automatic control using said switch, said control circuit enters an automatic control mode in which the headlamps are automatically controlled in response to the detection of light sources within the images.

75. The control system of claim 74, wherein, in response to selection of manual control using said switch, said control circuit enters a manual control mode in which the headlamps are manually controlled by the driver.

76. The control system of claim 72, wherein the exterior lights include headlamps, said switching mechanism includes a switch for manually activating high beams of the vehicle headlamps, and wherein said control circuit responds to activation of said switch by turning on the high beams.

77. The control system of claim 76, wherein said switch is a toggle switch and said control circuit maintains the high beams in an on state when said switch is toggled until such time that it is again toggled at which point said control circuit automatically controls the brightness of the high beams.

78. The control system of claim 76, wherein said switch is a flash-to-pass switch, wherein said control circuit responds to manual activation of said switch by activating high beam headlamps for so long a time as the flash-to-pass switch is held in its activation position.

79. The control system of claim 72, wherein the exterior lights include headlamps, said switching mechanism includes a toggle switch for manually activating and deactivating high beams of the vehicle headlamps, and wherein said control circuit responds to toggling of said switch by changing the on/off state of the high beams from the current status of the high beams.

80. The control system of claim 79, wherein, upon switching the on/off state of the high beams in response to toggling of said switch, said control circuit maintains the high beams in the changed state for a predetermined time period at which point said control

circuit enables automatic changing of the brightness of the high beams in response to the brightness of light sources in images obtained from said imaging system.

81. The control system of claim 72, wherein the exterior lights include headlamps, said switch is a flash-to-pass switch, and wherein said control circuit responds to manual activation of said switch by turning on the high beam headlamps for so long a time as the flash-to-pass switch is held in its activation position.

82. The control system of claim 81, wherein, when said flash-to-pass switch is released from its activation position, said control circuit turns off the high beam headlamps regardless of whether the high beams were on or off before such activation and thereafter enables automatic changing of the brightness of the high beams in response to the brightness of light sources in images obtained from said imaging system.

83. The control system of claim 72, wherein said imaging system is disposed in a rearview mirror assembly.

84. The control system of claim 72, wherein said control circuit is disposed in a rearview mirror assembly.

85. A headlamp control system for a vehicle comprising:

a control circuit coupled to the vehicle headlamps for fading the headlamps of the vehicle to an off state in response to the turning off of the vehicle ignition.

86. The headlamp control system of claim 85, wherein said control circuit begins to fade the vehicle headlamps upon detecting the exit of the driver.

87. The headlamp control system of claim 85, wherein said control circuit begins to fade the vehicle headlamps upon detecting the exit of the last occupant to leave the vehicle.

88. The headlamp control system of claim 85 and further comprising an imaging system configured to image the scene forward of the controlled vehicle, wherein said control circuit is coupled to said imaging system for identifying and determining the

brightness of light sources in images obtained from said imaging system and for controlling the beam pattern of the headlamps as a function of the brightness of light sources within the images.

89. The headlamp control system of claim 85, wherein said control circuit is disposed in a rearview mirror assembly.

90. A control system to control exterior lights of a vehicle comprising:

an image array sensor including a plurality of pixels;

an optical system configured to image the scene forward of the controlled vehicle onto said image array sensor, said optical system including a forwardmost surface; and

a control circuit for processing the image of the scene obtained from said image array sensor and for controlling the exterior lights in response to objects detected in the processed scene,

wherein said optical system includes a photocatalytic coating on said forwardmost surface.

91. The control system of claim 90, wherein said optical system is disposed in a rearview mirror assembly.

92. The control system of claim 90, wherein said control circuit is disposed in a rearview mirror assembly.

93. A control system to control the headlamps of a vehicle comprising:

a manually actuated switch mechanism for receiving input from a driver to temporarily increase the brightness of the vehicle headlamps in a flash-to-pass state;

an ambient light sensor for sensing the ambient light outside of the vehicle; and

a control circuit coupled to said ambient light sensor and said manually actuated switch mechanism for varying the beam pattern of the headlamps during a flash-to-pass state in response to the ambient light level sensed by said ambient light sensor.

94. The control system of claim 93, wherein said ambient light sensor is disposed in a rearview mirror assembly.

95. The control system of claim 93, wherein said control circuit is disposed in a rearview mirror assembly.

96. A control system to control the headlamps of a vehicle, the vehicle having a microwave receiver for receiving signals from satellites, said control system comprising:

a control circuit for receiving signals from the microwave receiver indicative of the location of the vehicle, said control circuit controls the headlamps to limit the perceived brightness of the headlamps from exceeding a predetermined level less than their capacity when the vehicle is traveling on a residential street.

97. The control system of claim 96 and further comprising an imaging system configured to image the scene forward of the controlled vehicle, wherein said control circuit identifies and determines the brightness of light sources in images obtained from said imaging system and for controlling the headlamps to vary the perceived brightness of the headlamps as a function of the brightness of light sources within the images.

98. An imaging device assembly for a vehicle having a windshield, said assembly comprising:

a mounting structure configured for mounting to a vehicle in a fixed position relative to the windshield;

an imaging device; and

a support structure, said imaging device carried by said support structure, said support structure being attached to said mounting structure to allow positional adjustment of said support structure and said imaging device relative to the windshield.

99. The imaging device assembly of claim 98 and further including a housing secured to said mounting structure, said support structure and said imaging device being disposed in said housing.

100. The imaging device assembly of claim 99, wherein both said housing and said support structure being attached to said mounting structure such that positional adjustment of said support structure may be performed without changing the position of said housing relative to said mounting structure.

101. The imaging device assembly of claim 98, wherein said mounting structure is a rearview mirror assembly mounting structure.

102. The imaging device assembly of claim 101, wherein said rearview mirror assembly mounting structure is configured for securing a rearview mirror assembly to a vehicle windshield.

103. A sky sensor assembly for sensing light in the sky above a vehicle, said assembly comprising:

a housing configured for mounting to the vehicle;

a light sensor disposed within said housing;

a light pipe extending from said light sensor to an aperture formed in said housing that is directed upward towards the portion of the sky from which light is to be sensed.

104. The sky sensor assembly of claim 103, wherein said housing is a component of a rearview mirror assembly.

105. The sky sensor assembly of claim 104, wherein said housing is an accessory housing mounted to a mounting structure for a rearview mirror assembly.

106. The sky sensor assembly of claim 103 and further including a circuit board that is disposed vertically within said housing, wherein said light sensor is mounted to said circuit board.

107. The sky sensor assembly of claim 106, wherein an image sensor is mounted to said circuit board for sensing images forward of the vehicle.

108. A control system for controlling exterior lights of a controlled vehicle, said control system comprising:

an image sensor to detect light sources in a scene forward of the controlled vehicle; and

a control circuit coupled to said image sensor, said control circuit being operable to distinguish vehicle light sources from non-vehicle light sources, to distinguish between headlamps and tail lights based upon the color of the light, to detect movement of detected

vehicles, and to generate a control signal to cause the exterior vehicle lights to provide a selected illumination pattern, whereby the control signal is derived as a function of both the movement of any detected vehicles and the color of the light emanating from such vehicles.

109. The control system of claim 108, wherein the control signal is further derived as a function of any one or combination of the following parameters detected with respect to a detected light source: an AC component; brightness; relative position; and relative size.

110. The control system of claim 108, wherein the control signal is further derived as a function of any one or combination of the following parameters: turn rate of the controlled vehicle; speed of the controlled vehicle; and ambient brightness.

111. A method of automatically controlling vehicle headlamps in a system comprising an image sensor generating a plurality of pixel levels from a scene being imaged and a controller to generate headlamp control signals, the method comprising the steps of:

receiving pixel levels from the image sensor;

identifying at least one group of pixels that is associated with a light source;

analyzing the associated pixels to determine if at least one condition exists; and

selectively generating a headlamp control signal in accordance with the results of the analysis.

112. The method of claim 111, wherein the step of identifying a group of pixels associated with a single light source identifies a plurality of pixels meeting a pixel criteria.

113. The method of claim 112, wherein the step of identifying a group of pixels identifies a contiguous group of pixels meeting a pixel criteria.

114. The method of claim 111, wherein the step of analyzing identifies the centroid of at least one group of pixels.

115. The method of claim 111, wherein the step of analyzing determines the size of at least one group of pixels.

116. The method of claim 115, wherein the condition is whether the light source size is greater than a threshold size.

117. The method of claim 116, wherein a further condition is the average level of the pixel levels, and wherein the headlamps are not controlled responsive to a group of pixels that is greater than the threshold size if the average pixel level in that group of pixels is less than an average pixel level threshold.

118. The method of claim 111, wherein the step of analyzing includes determining the total pixel level for at least one group of pixels.

119. The method of claim 118, where the total pixel level is the sum of the gray scale values for all of the pixels in a group of pixels.

120. The method of claim 118, where the condition is that the total pixel level exceeds a threshold total pixel level.

121. The method of claim 120, further including a threshold total pixel level for the headlamps and a threshold total pixel level for tail lights.

122. The method of claim 111, wherein the step of analyzing includes determining the average pixel level for at least one group of pixels.

123. The method of claim 120, wherein the condition is a threshold average pixel level, and the controller ignores certain light sources where the average pixel level for the group of pixels is below the average pixel level.

124. The method of claim 112, wherein the step of identifying a plurality of pixels meeting a pixel criteria identifies individual pixels having levels above a pixel threshold level.

125. A method of automatically controlling vehicle headlamps in a system comprising an image sensor generating a plurality of pixel levels from a scene being imaged and a controller to generate headlamp control signals, the method comprising the steps of:

receiving pixel levels from the image sensor;

analyzing an image input with red filtering to identify objects of interest;

analyzing an image input without red filtering in those areas where objects were identified in the step of analyzing with red filtering; and

selectively generating a headlamp control signal in accordance with the results of the steps of analyzing.

126. The method of claim 125, further including the step of comparing pixels levels in the image generated with red filtering to pixel levels in the image generated without red filtering for each of the objects of interest.

127. The method of claim 125, wherein the step of analyzing an image input with red filtering includes identifying groups of contiguous pixels meeting a threshold criteria to identify objects.

128. The method of claim 127, wherein the step of analyzing an image input without red filtering includes searching for groups of contiguous pixels in areas corresponding to objects identified in the step of analyzing an image input without red filtering.

129. A method of automatically controlling vehicle headlamps in a system comprising an image sensor generating a plurality of pixel levels from a scene being imaged and a controller to generate headlamp control signals, the method comprising the steps of:

receiving pixel levels from the image sensor;

determining a vehicle speed criteria;

analyzing an image input from the image sensor according to the speed criteria; and

selectively generating a headlamp control signal in accordance with the results of the steps of analyzing.

130. The method of claim 129, wherein the speed criteria is whether the vehicle brakes are actuated.

131. The method of claim 129, wherein the speed criteria is whether the vehicle is traveling at highway speeds.

132. The method of claim 129, wherein the step of analyzing includes changing the size of the scene viewed by the image sensor as a function of the vehicle speed.

133. The method of claim 132, wherein the speed above which the scene is enlarged is higher than the speed below which the scene is decreased.

134. The method of claim 129, wherein the step of analyzing includes preventing the high beams from coming on if the vehicle speed is below a threshold level.

135. The method of claim 129, wherein the step of selectively generating a control signal comprises fading the high beams off as the vehicle decelerates to a stop.

136. A method of automatically controlling vehicle headlamps in a system comprising an image sensor generating a plurality of pixel levels from a scene being imaged and a controller to generate headlamp control signals, the method comprising the steps of:

receiving pixel levels from the image sensor;

receiving an ambient light level from an ambient light sensor;

analyzing an image input from the image sensor according to the ambient light level to selectively generate a headlamp control signal in accordance with the results of the analysis, wherein daytime running lights are enabled when the ambient light level is above a first threshold, low beam headlamps are enabled when the ambient light level is below the first threshold, and the low beam headlamps and high beam headlamps are enabled when the ambient light level is below a second threshold, and wherein the high beam headlamps are controlled automatically responsive to the pixel levels from the image sensor.

137. The method of claim 136, further including controlling one or more fog lights responsive to the ambient light sensor and the image sensor.

138. The method of claim 137, wherein the step of controlling includes evaluating the pixels of the image sensor to determine if they meet a fog criteria if the ambient light level measured by the ambient light sensor is within a predetermined range.

139. A method of automatically controlling vehicle headlamps in a system comprising an image sensor generating a plurality of pixel levels from a scene being imaged and a controller to generate headlamp control signals, the method comprising the steps of:

receiving pixel levels from the image sensor;

determining the number of objects in the image;

analyzing the image input from the image sensor to determine the number of objects in the image; and

selectively generating a headlamp control signal in accordance with the results of the steps of analyzing, wherein high beam headlamp operation is at least partially inhibited if the number of objects determined exceeds an object threshold.

140. The method as defined in claim 139, wherein the step of analyzing the image to detect objects monitors the frequency of occurrence of objects within a predetermined period.

141. The method as defined in claim 140, wherein the predetermined period is a predetermined number of frames.

142. The method as defined in claim 140, wherein the step of selectively generating includes inhibiting operation of the high beams when the number of objects exceeds a predetermined number.

143. The method as defined in claim 139, wherein the step of selectively generating includes inhibiting operation of the high beams when the number AC light source objects exceeds a threshold.

144. The method as defined in claim 139, wherein turning ON the high beam headlamps is inhibited if the number of objects determined exceeds an object threshold.

145. A method of automatically controlling vehicle headlamps in a system comprising an image sensor generating a plurality of pixel levels from a scene being imaged and a controller to generate headlamp control signals, the method comprising the steps of:

receiving pixel levels from the image sensor;

analyzing the image input from the image sensor to determine the number of objects in the image; and

selectively generating a headlamp control signal in accordance with the results of the steps of analyzing, wherein the vehicle headlamps are not adjusted responsive to detection of an object unless it appears in a threshold number of frames.

146. The method of claim 145, wherein the threshold number of frames is proportional to the brightness of the objects detected.

147. The method of claim 145, wherein the brighter the object detected, the smaller will be the threshold number of frames.

148. The method of claim 145, wherein the brightness of the headlamps are gradually altered after an object is detected for the threshold number of frames.

149. The method of claim 148, wherein after an object is detected for the threshold number of frames, the high beams may be adjusted responsive to each successive frame in which the object appears.

150. The method of claim 145, wherein the headlamp brightness is increased after the image clears for the threshold number of frames.

151. The method of claim 145, wherein the headlamp brightness is dimmed after an object is detected in the image for the threshold number of frames.

152. A method of automatically controlling vehicle headlamps in a system comprising an image sensor generating a plurality of pixel levels from a scene being imaged and a controller to generate headlamp control signals, the method comprising the steps of:

receiving pixel levels from the image sensor;

analyzing the image input from the image sensor using a spatial look-up table, the spatial look-up table having different thresholds for different pixels based on their pixel location; and

selectively generating a headlamp control signal in accordance with the results of the steps of analyzing, wherein the vehicle headlamps are controlled responsive to those pixels from the image sensor exceeding its respective threshold.

153. The method of claim 152, further including the step of shifting the pixels associated with the values stored in the spatial look-up table as the vehicle changes direction.

154. The method of claim 153, wherein the step of shifting the pixels includes shifting the pixels responsive to operation of the vehicle steering system.

155. The method of claim 153, wherein the step of shifting the pixels includes shifting the pixels responsive to a global positioning system input.

156. The method of claim 153, wherein the step of shifting the pixels includes shifting the pixels responsive to a compass input.

157. The method of claim 151, wherein the spatial look-up table has values which render the image sensor more sensitive to one side of the car than the other side of the car.

158. The method of claim 157, wherein the image sensor is more sensitive to the side of the car on which the driver sits.

159. The method of claim 151, wherein thresholds are dynamic such that if one pixel has a light level that is above its respective threshold, and the look-up table has a higher threshold for the adjacent pixel, the adjacent pixel will be compared to the lower of threshold said one pixel.

160. A method of automatically controlling vehicle headlamps in a system comprising an image sensor generating a plurality of pixel levels from a scene being imaged and a controller to generate headlamp control signals, the method comprising the steps of:

receiving pixel levels from the image sensor;

identifying pixels associated with a light source;

analyzing the pixels; and

selectively generating a headlamp control signal in accordance with the results of the analysis, wherein the system is more sensitive when high beams are ON than when the high beams are OFF.

161. The method of claim 160, wherein the sensitivity is adjusted by increasing the integration period for the image sensor when the high beams are ON.

162. The method of claim 160 wherein the sensitivity is adjusted by using different spatial look-up tables when the high beams are OFF and ON, wherein the spatial look-up table stores respective thresholds.

163. The method of claim 160, wherein the field of view of the image sensor is broader when the high beams are OFF than when the high beams are ON.

164. The method of claim 160, wherein the off-axis sensitivity is increased when the high beams are ON.

165. A method of automatically controlling vehicle headlamps in a system comprising an image sensor generating a plurality of pixel levels from a scene being imaged and a controller to generate headlamp control signals, the method comprising the steps of:

receiving pixel levels from the image sensor;

identifying pixels that are associated with an object;

analyzing the associated pixels and storing information associated with at least one detected object; and

selectively generating a headlamp control signal in accordance with the results of the analysis.

166. The method of claim 165, wherein the stored information includes the brightness of at least one object detected.

167. The method of claim 166, wherein the stored information includes the location of at least one object detected.

168. The method of claim 165, wherein the stored information includes the locations and brightness of the brightest object detected.

169. The method of claim 168, wherein if the present frame is determined to be clear of light sources, and the previous frame is determined to a bright light source, and the high beams are OFF, the high beams are controlled to produce a fast return to bright.

170. The method of claim 169, wherein the control of the high beams to produce a fast return includes an expedited fade to bright.

171. The method of claim 169, wherein the control of the high beams to produce a fast return comprises turning the high beams ON without delay.

172. The method of claim 165, wherein if the present frame is determined to be clear of light sources, and the previous frame is determined to have contained vehicle tail lights, and the high beams are OFF, the high beams are controlled to produce a tail light delayed return to bright.

173. The method of claim 172, wherein the tail light delayed return to bright is longer than a return to bright following detection of headlamps from an oncoming vehicle.

174. The method of claim 172, wherein the tail light delayed return to bright is variable.

175. The method of claim 172, wherein the tail light return to bright is dependent on the detection of glare light.

176. The method of claim 175, wherein the high beams are turned on when glare is detected.

177. The method of claim 176, wherein if glare is not detected in a maximum threshold time after detecting the cleared image, the brights are turned ON even if glare has not been detected.

178. A method of automatically calibrating the aim of an image sensor in a controlled vehicle, comprising the steps of:

detecting a distant light of an oncoming vehicle;

detecting a straight road condition; and

generating a new average value from the location of the distant oncoming light averaged with a stored average if the straight road condition is detected, and

storing the new average value as the stored average signal.

179. The method of claim 178, wherein the step of detecting a distant light comprises detecting a faint light near the center of the image sensor.

180. The method of claim 178, wherein the step of detecting a straight road detects the lateral movement of the controlled vehicle over a period of time.

181. The method of claim 180, wherein the period of time is from the time that the distant light is detected until a time period after the distant vehicle and the controlled vehicle have passed.

182. The method of claim 178, further including the step of detecting elevation change of the controlled vehicle.

183. The method of claim 180, wherein lateral movement is detected by determining the lateral movement of the distant headlamp.

184. The method of claim 180, wherein lateral movement is detected using a global positioning system.

185. The method of claim 180, wherein lateral movement is detected from a compass.

186. The method of claim 180, wherein lateral movement is detected from operation of the steering system.

187. A method of automatically controlling vehicle headlamps in a system comprising an image sensor generating a plurality of pixel levels from a scene being imaged and a controller to generate headlamp control signals, the method comprising the steps of:

receiving pixel levels from the image sensor;

analyzing the pixel levels associated with a scene, wherein the analysis is altered when the vehicle turns; and

selectively generating a headlamp control signal in accordance with the results of the analysis.

188. The method of claim 187, wherein the image analyzed is shifted when the vehicle turns.

189. The method of claim 187, wherein the image analyzed is shifted when the vehicle turn signal is actuated.

190. The method of claim 187, wherein the analysis of the image is altered when the vehicle heading as detected from a compass is altered.

191. The method of claim 189, wherein the analysis is altered after actuation of the vehicle brakes following actuation of the vehicle's turn signal.

192. A method of automatically controlling vehicle headlamps in a system comprising an image sensor generating a plurality of pixel levels from a scene being imaged and a controller to generate headlamp control signals, the method comprising the steps of:

receiving pixel levels from the image sensor, wherein the pixel levels are stored while the vehicle headlamps are off;

analyzing the pixels to detect objects; and

selectively generating a headlamp control signal in accordance with the results of the analysis.

193. The method of claim 192, wherein the vehicle includes semiconductor radiation emitter light source, wherein the light is flashed off for a very short interval.

194. The method of claim 193, wherein the off interval is less than 60 ms.

195. A method of automatically controlling vehicle headlamps in a system comprising an image sensor generating a plurality of pixel levels from a scene being imaged through a variable filter and a controller to generate headlamp control signals, the method comprising the steps of:

receiving pixel levels from the image sensor when the variable filter is filtering light of at least a first wavelength;

receiving pixel levels from the image sensor through the variable filter when the variable filter is not filtering light of at least the first wavelength;

analyzing the associated pixels to identify objects; and

selectively generating a headlamp control signal in accordance with the results of the analysis.

196. A method of automatically controlling vehicle headlamps in a system comprising an image sensor generating a plurality of pixel levels from a scene being imaged through a windshield, a windshield wiper for clearing the windshield, and a controller to generate headlamp control signals, the method comprising the steps of:

receiving signals indicative of the location of the windshield wiper;

receiving pixel levels from the image sensor when the windshield wiper is not in front of the image sensor;

analyzing the associated pixels to identify objects; and

selectively generating a headlamp control signal in accordance with the results of the analysis.

197. The method of claim 196, further including the step of monitoring the window using an image sensor focused on the window to detect the presence of the windshield wiper in the field of view of the image sensor for detecting objects.

198. The method of claim 196, further including the step of monitoring the windshield wipers to detect their position.

199. A vehicle system, comprising:

an image sensor for detecting lights;

an ambient light sensor;

a glare sensor;

an electrochromic element for controlling the reflectivity of a mirror;

headlamps; and

a controller coupled to the image sensor, the ambient light detector, the glare sensor, the electrochromic element, and the headlamps, wherein the controller is operable to control the headlamps responsive to the image sensor and the ambient light sensor, and the controller being further operable to control the transmittance of the electrochromic element responsive to the ambient light sensor and the glare sensor.

200. The vehicle system of claim 199, wherein at least one of said controller, glare sensor, ambient light sensor, and image sensor are supported by a rearview mirror assembly of the vehicle.

201. A method of operating an image sensor generating a plurality of pixel levels from a scene being imaged, the method comprising the steps of:

receiving pixel levels from the image sensor;

identifying a bad pixel if a pixel continuously detects light when adjacent pixels do not detect light; and

selectively compensating for the identified pixels.

202. The method of claim 201, wherein the step of identifying a pixel that continuously detects light comprises determining that the pixel detects light over a predetermined number of frames.

203. The method of claim 202, wherein the step of identifying includes detecting when a pixel detects light above a pixel threshold over a predetermined number of frames and adjacent frames do not detect light above a pixel threshold over the predetermined number of frames.

204. The method of claim 201, wherein the step of selectively compensating comprises generating an average of the adjacent pixels and substituting the generated average for the pixel level measurement of the bad pixel.

205. A vehicle system, comprising:

an image sensor focused at a distance for detecting lights;

an image sensor focused near the window;

windshield wipers;

headlamps; and

a controller coupled to the image sensor, the ambient light detector, the image sensor focused near the window, the windshield wipers, and the headlamps, wherein the controller is operable to control the headlamps responsive to the image sensor, control the windshield wipers to operate when rain is on the window, and the controller being further operable to control the image sensor to image a scene when the windshield wipers are not in front of the image sensor focused at a distance.

206. A method of making an optical sensor assembly package including an image sensor die comprising the steps of:

covering the die with an epoxy;

positioning an adhesive on the epoxy;

positioning a lens structure on the adhesive; and

curing the adhesive to form the integral package.

207. The method of claim 206, further including the step of molding the lens structure to include a lens.

208. The method of claim 207, further including the step of molding the lens structure to include a first lens having a filter for removing light of at least a first wave length.

209. The method of claim 208, further including the step of molding the lens structure to include a second lens passing at least light of the first wave length.

210. The method of claim 206, wherein the step of covering includes covering the die with a glob-top epoxy.

211. The method of claim 206, further including the step of applying at least one filter to the surface of the image sensor die.

212. The method of claim 211, wherein the step of applying at least one filter includes applying two or more filters to respective areas on the surface of the sensor.

213. The method of claim 206, further including the step of mounting an electronically controlled filter.

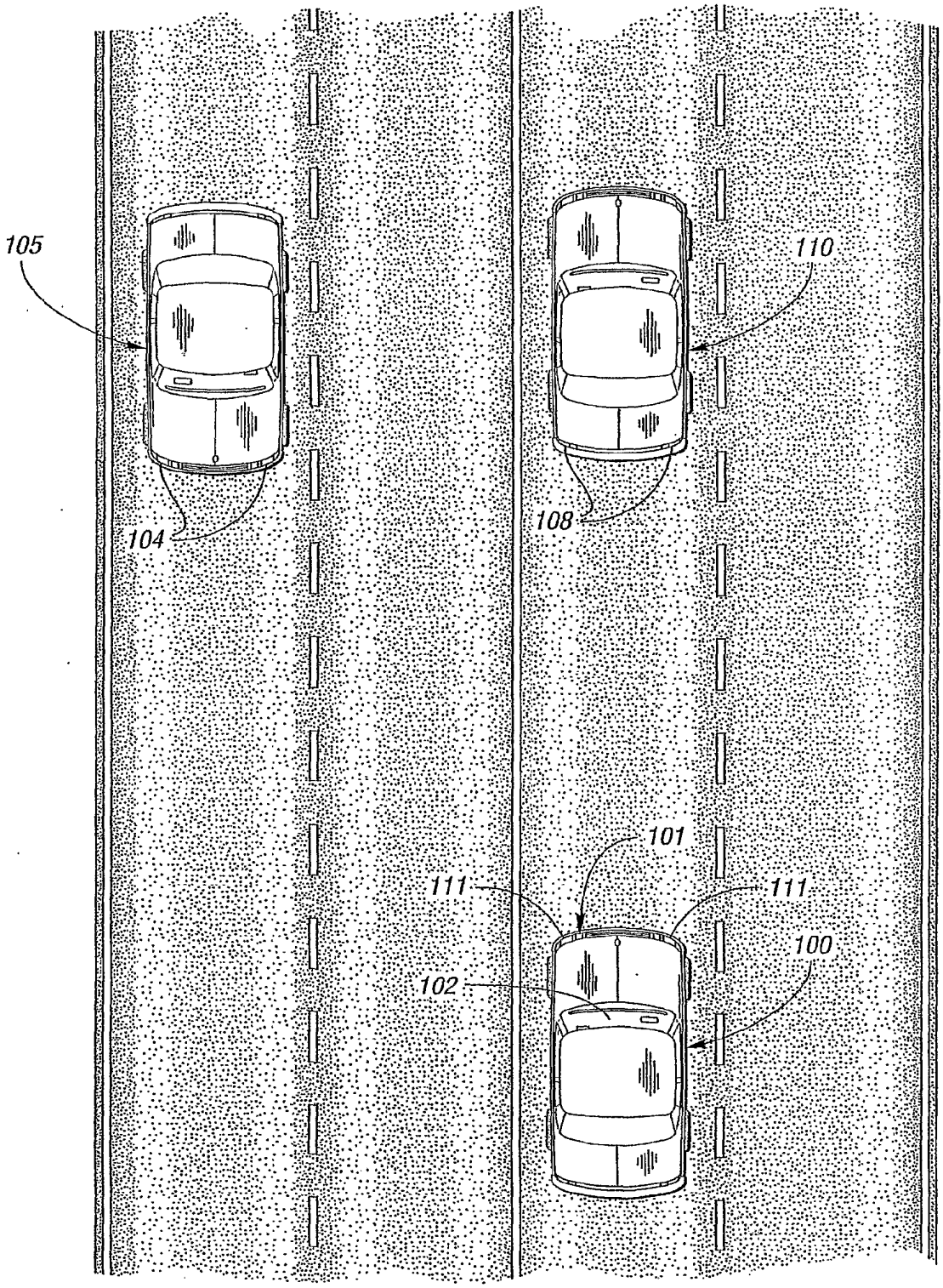

Fig. 1

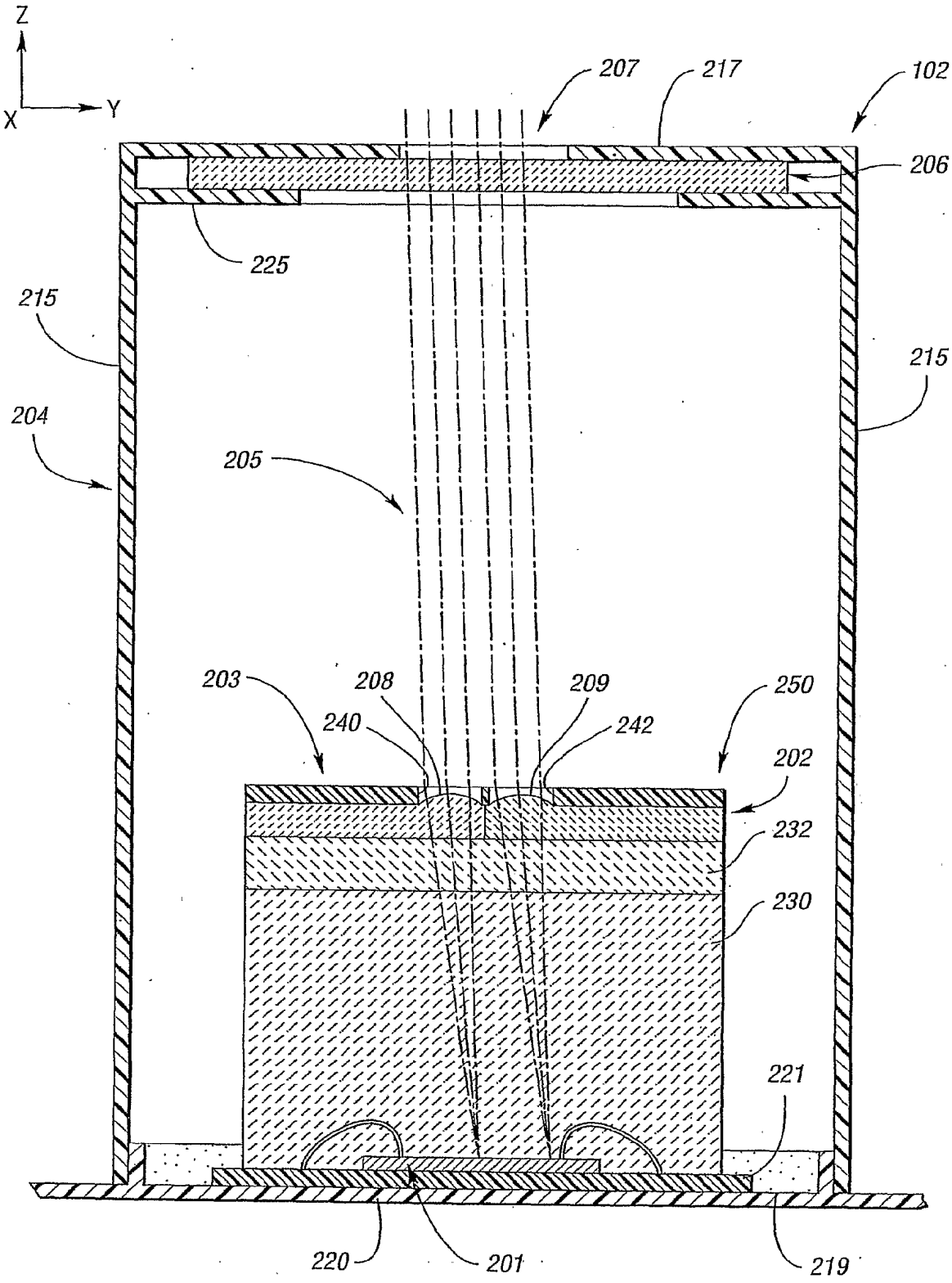
Z
X
Y
207
217
102
206
225
215
215
204
205
203
208
209
250
240
242
202
232
230
221
220
201
219

Fig. 2a

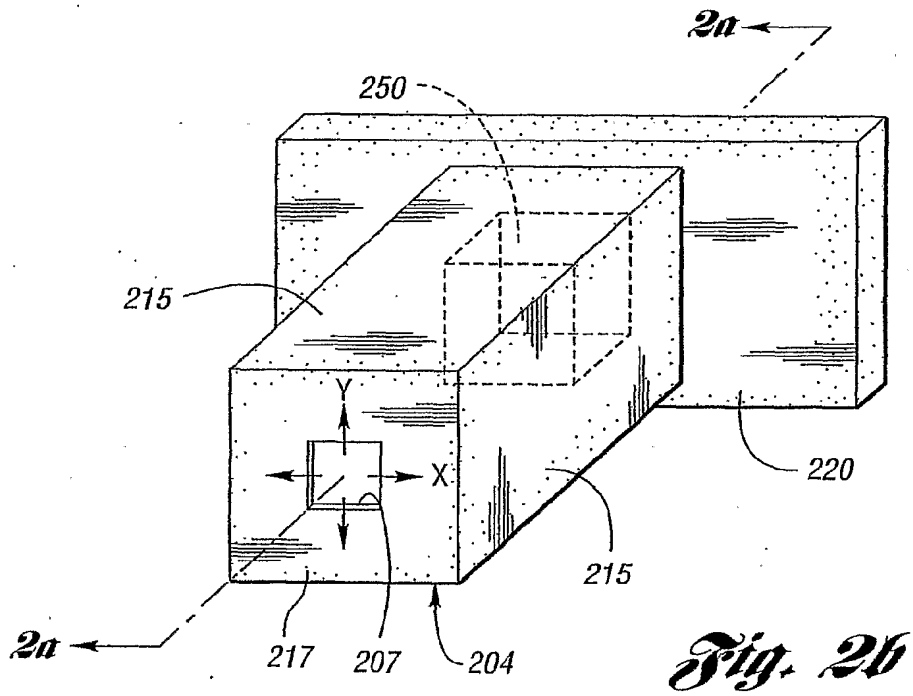
2a
250
215
Y
X
220
215
2a
217
207
204

Fig. 2b

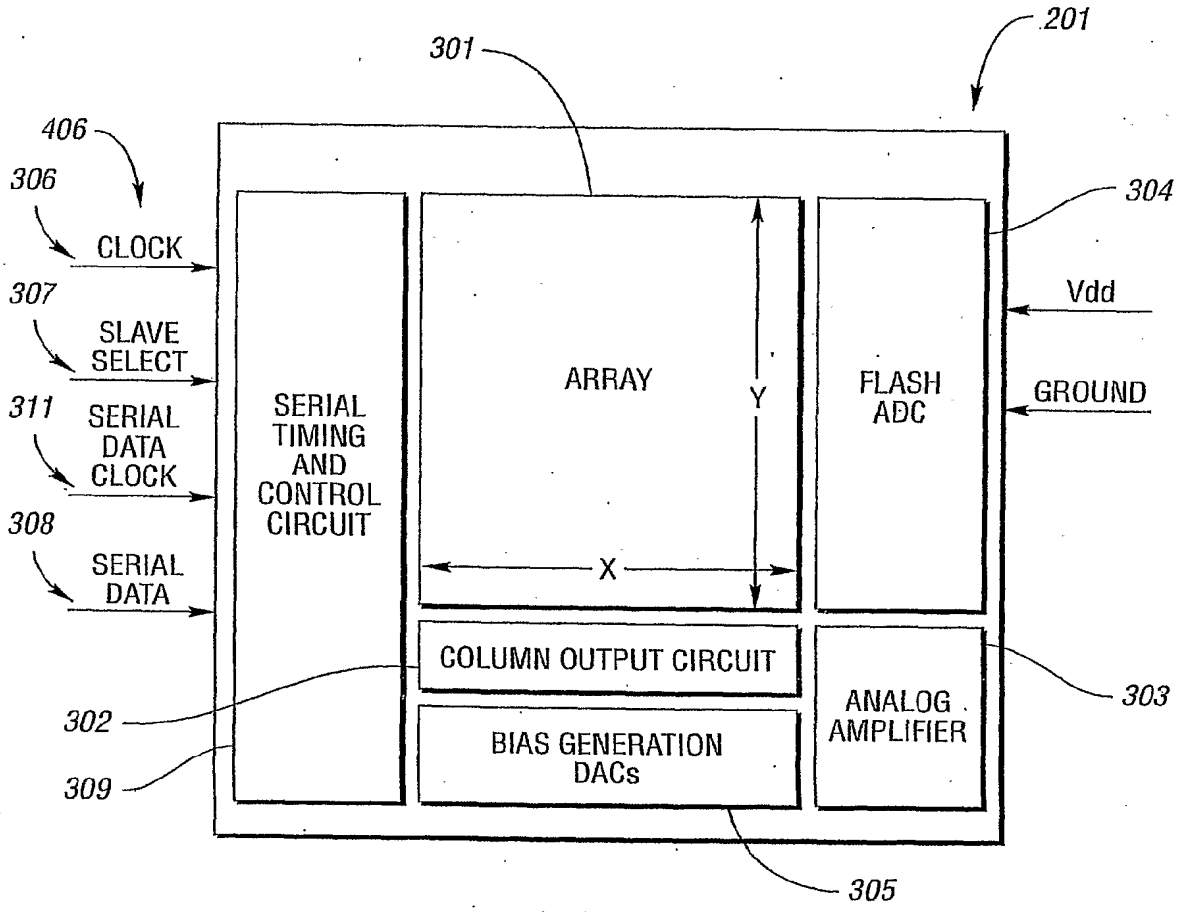
201
301
406
306
CLOCK
307
SLAVE SELECT
311
SERIAL DATA CLOCK
308
SERIAL DATA
SERIAL TIMING AND CONTROL CIRCUIT
ARRAY
Y
X
FLASH ADC
304
Vdd
GROUND
COLUMN OUTPUT CIRCUIT
BIAS GENERATION DACs
ANALOG AMPLIFIER
303
302
309
305

Fig. 3

Fig. 4

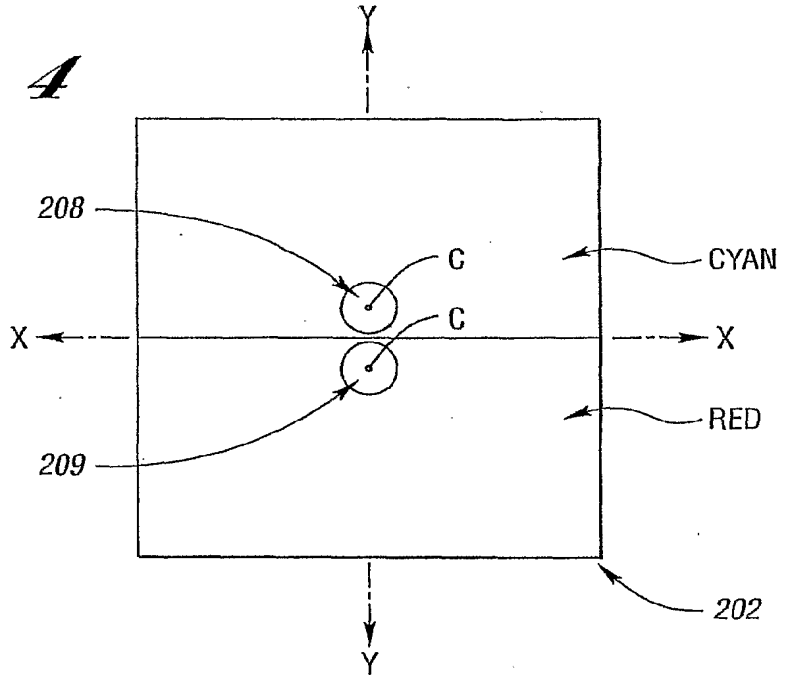

Fig. 5

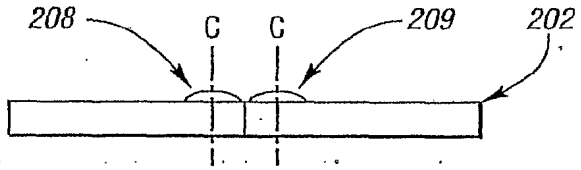

Fig. 6

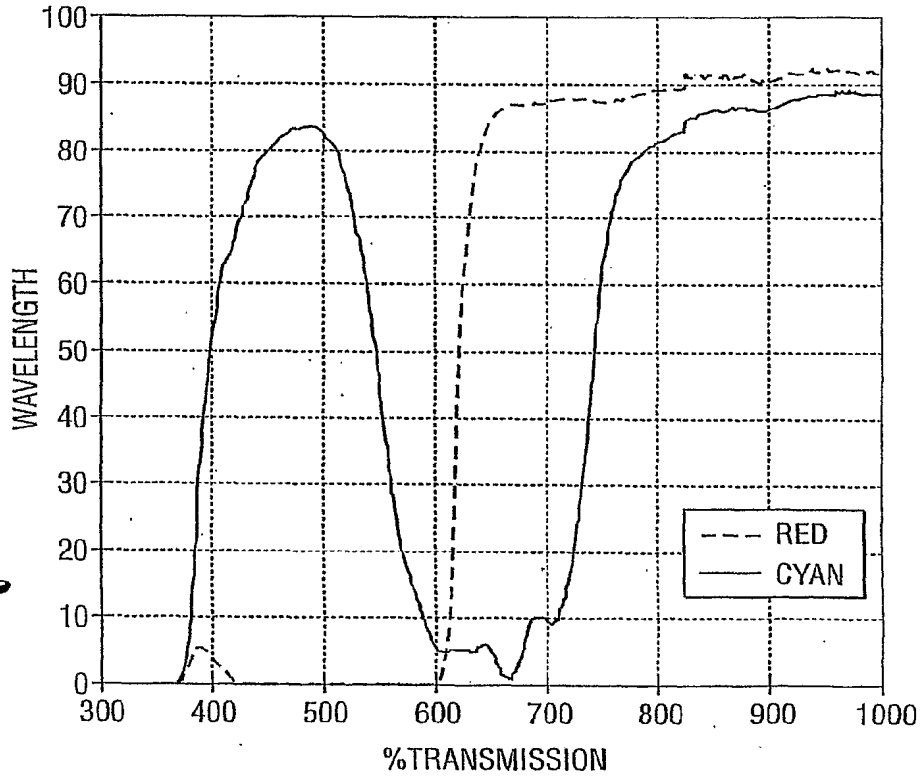

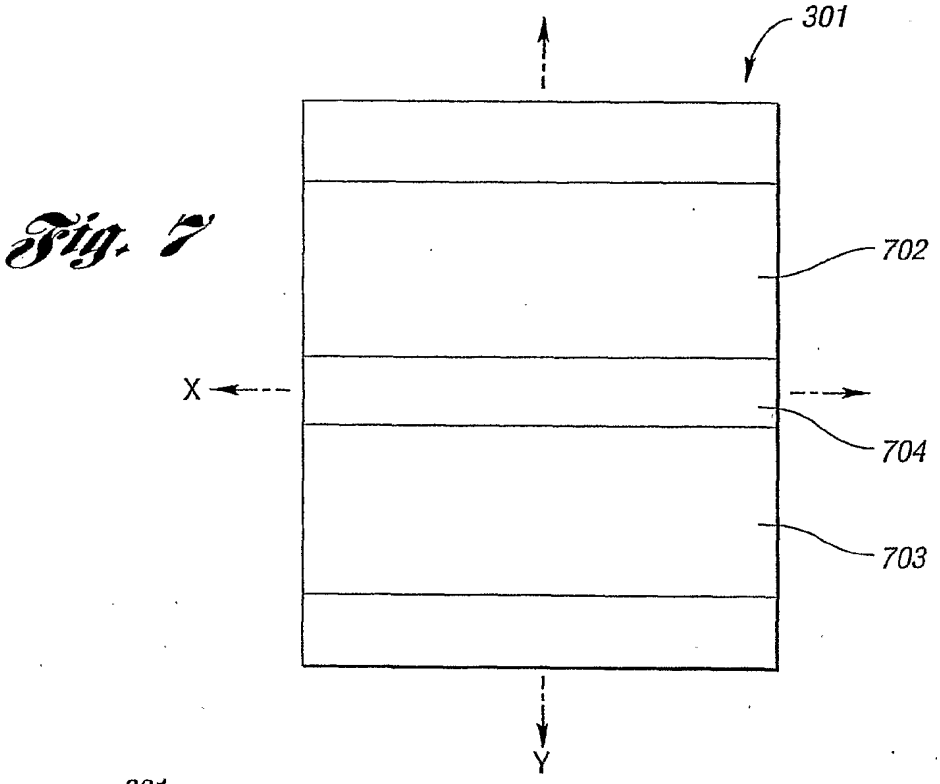
301
702
X
704
703
Y

Fig. 7

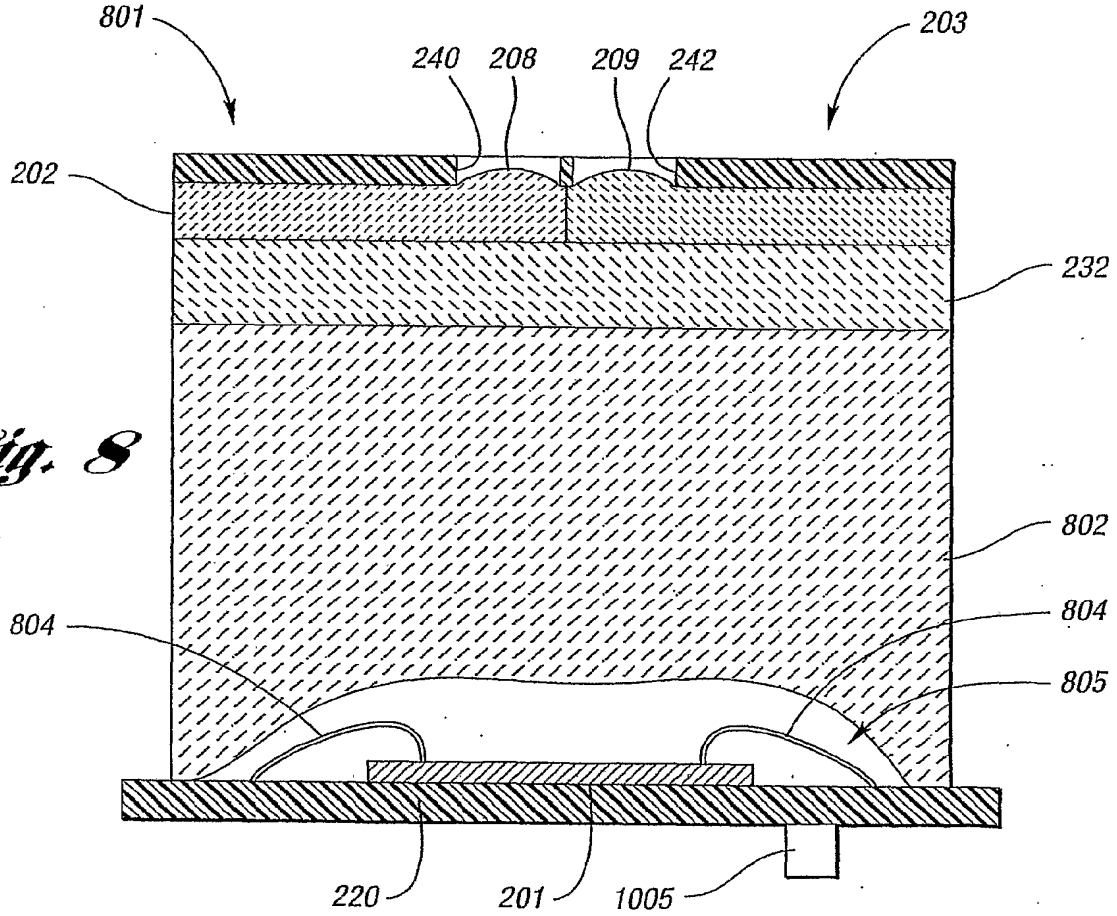
801
240
208
209
242
203
202
232
802
804
804
805
220
201
1005

Fig. 8

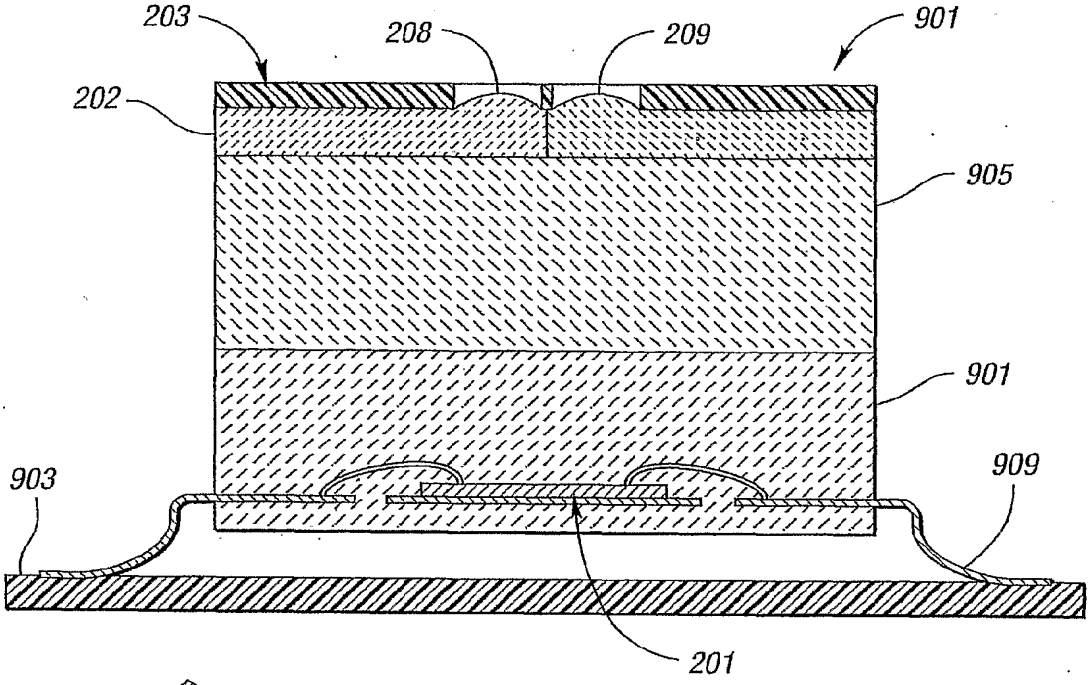
203
208
209
901
202
905
901
903
909
201

Fig. 9

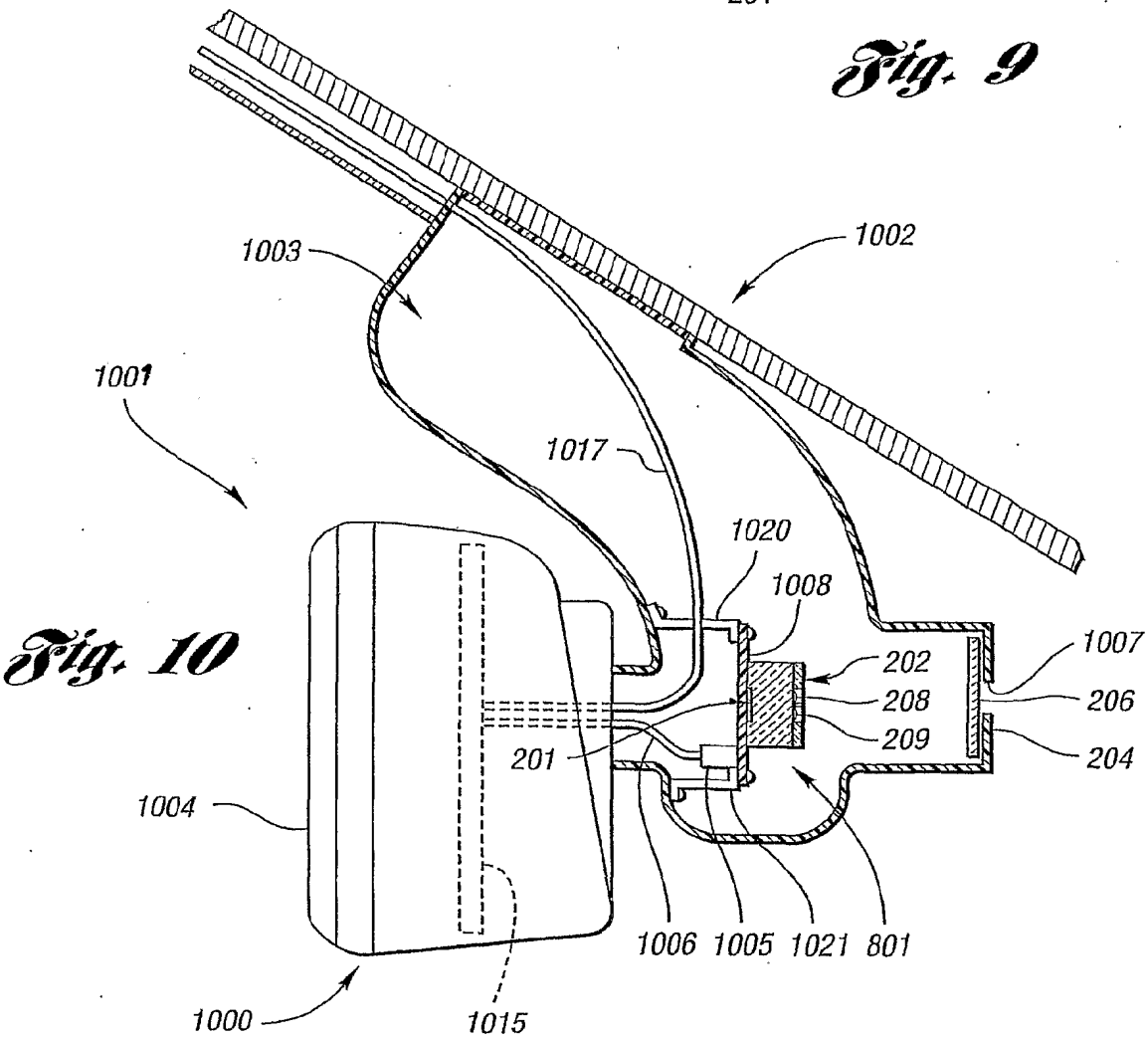
1003
1002
1001
1017
1020
1008
1007
202
206
208
209
204
201
1004
1006
1005
1021
801
1000
1015

Fig. 10

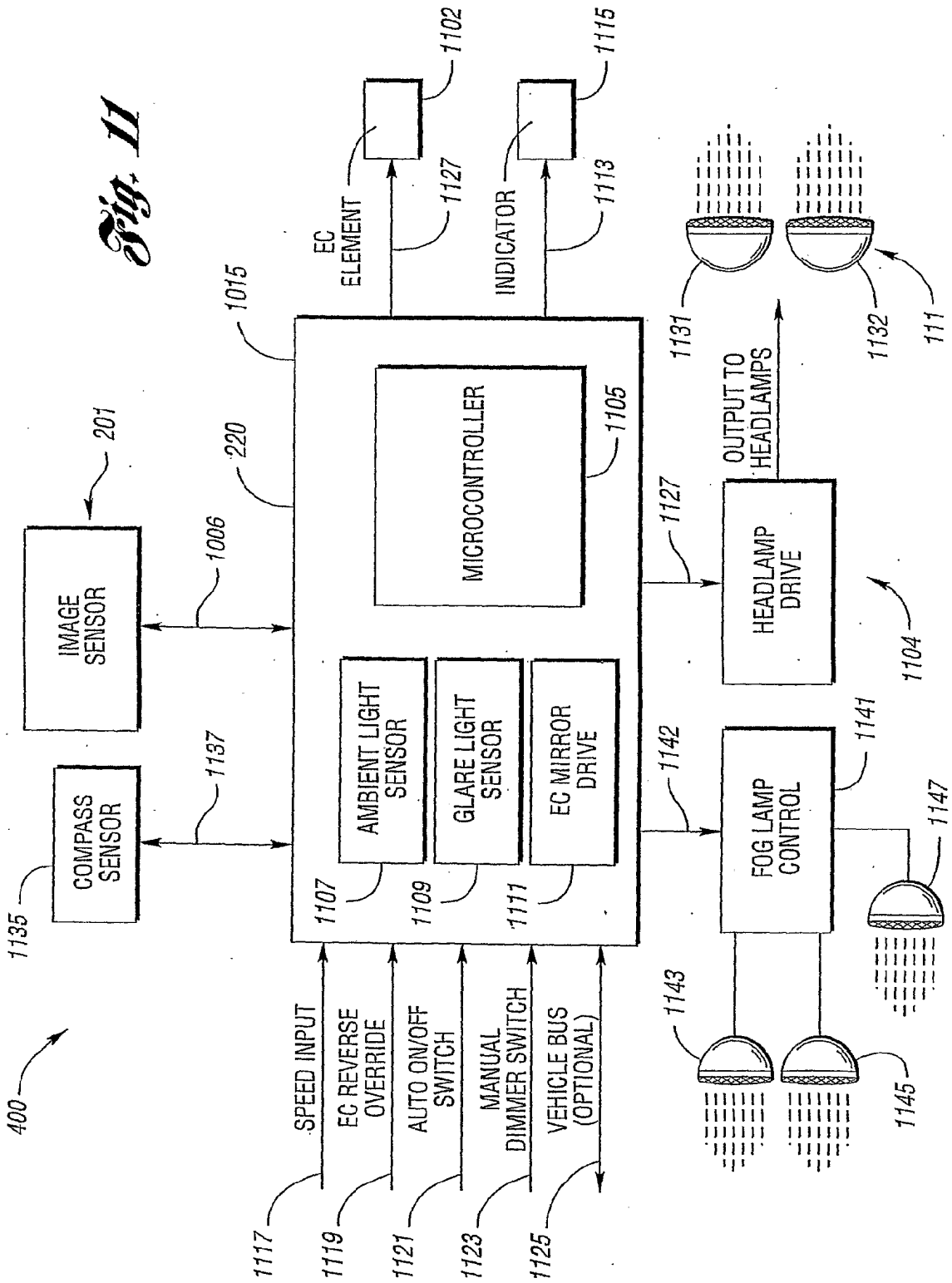
400
201
IMAGE SENSOR
1135
COMPASS SENSOR
1006
1137
220
1015
MICROCONTROLLER
1105
AMBIENT LIGHT SENSOR
GLARE LIGHT SENSOR
EC MIRROR DRIVE
1107
1109
1111
EC ELEMENT
1102
1127
INDICATOR
1115
1113
SPEED INPUT
EC REVERSE OVERRIDE
AUTO ON/OFF SWITCH
MANUAL DIMMER SWITCH
VEHICLE BUS (OPTIONAL)
1117
1119
1121
1123
1125
1127
HEADLAMP DRIVE
1104
OUTPUT TO HEADLAMPS
1131
1132
111
1142
FOG LAMP CONTROL
1141
1143
1145
1147

Fig. 11

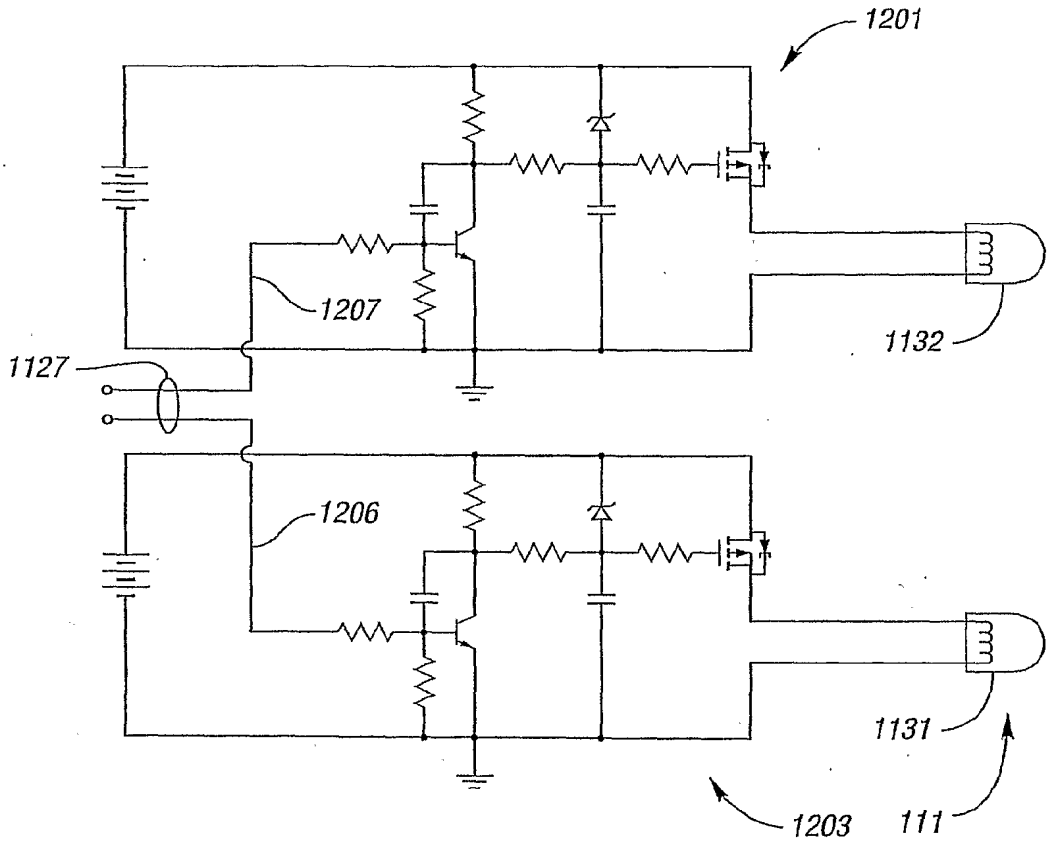

Fig. 12

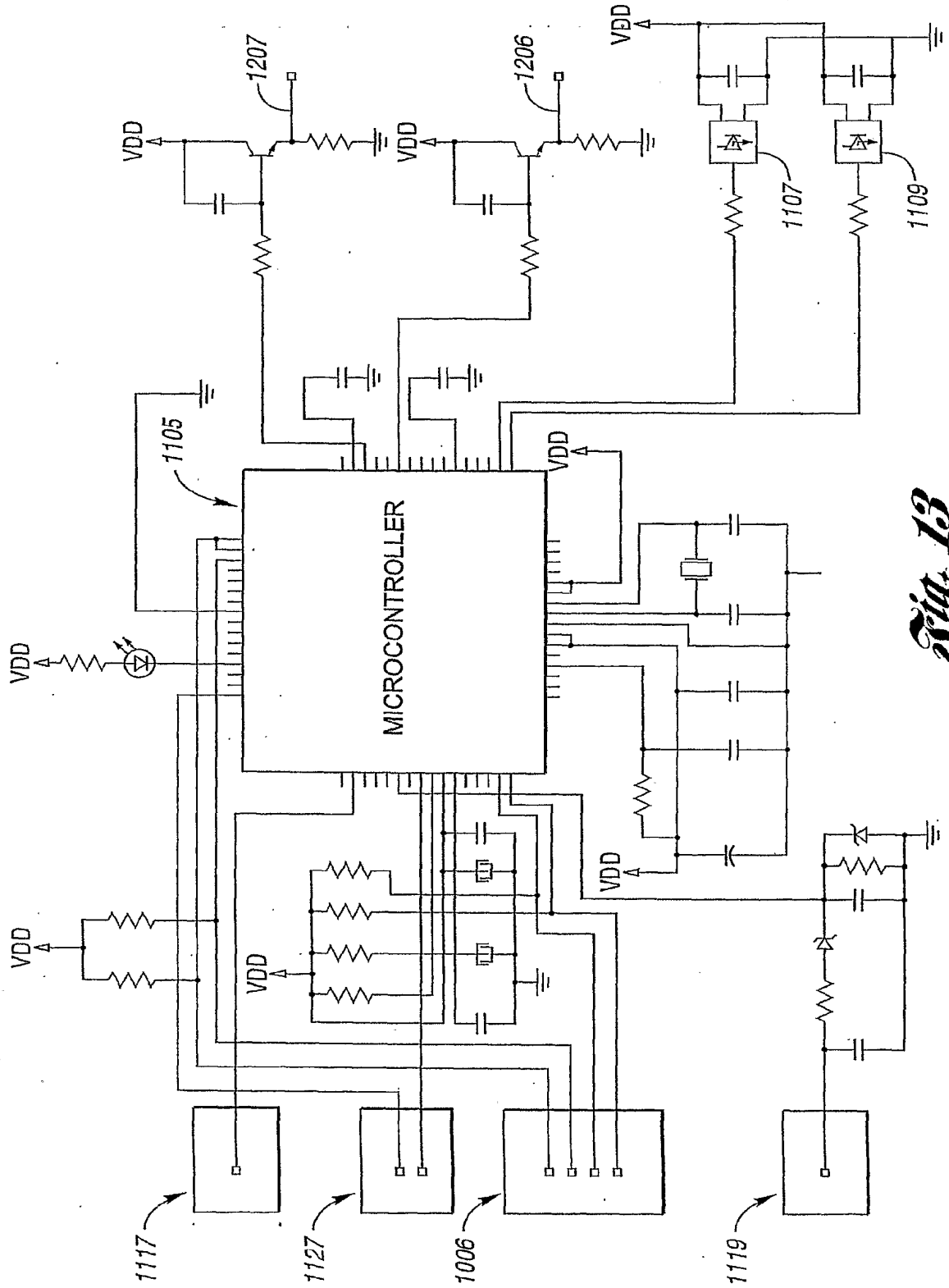
MICROCONTROLLER
1105
1207
1206
1107
1109
1117
1127
1006
1119
VDD

Fig. 13

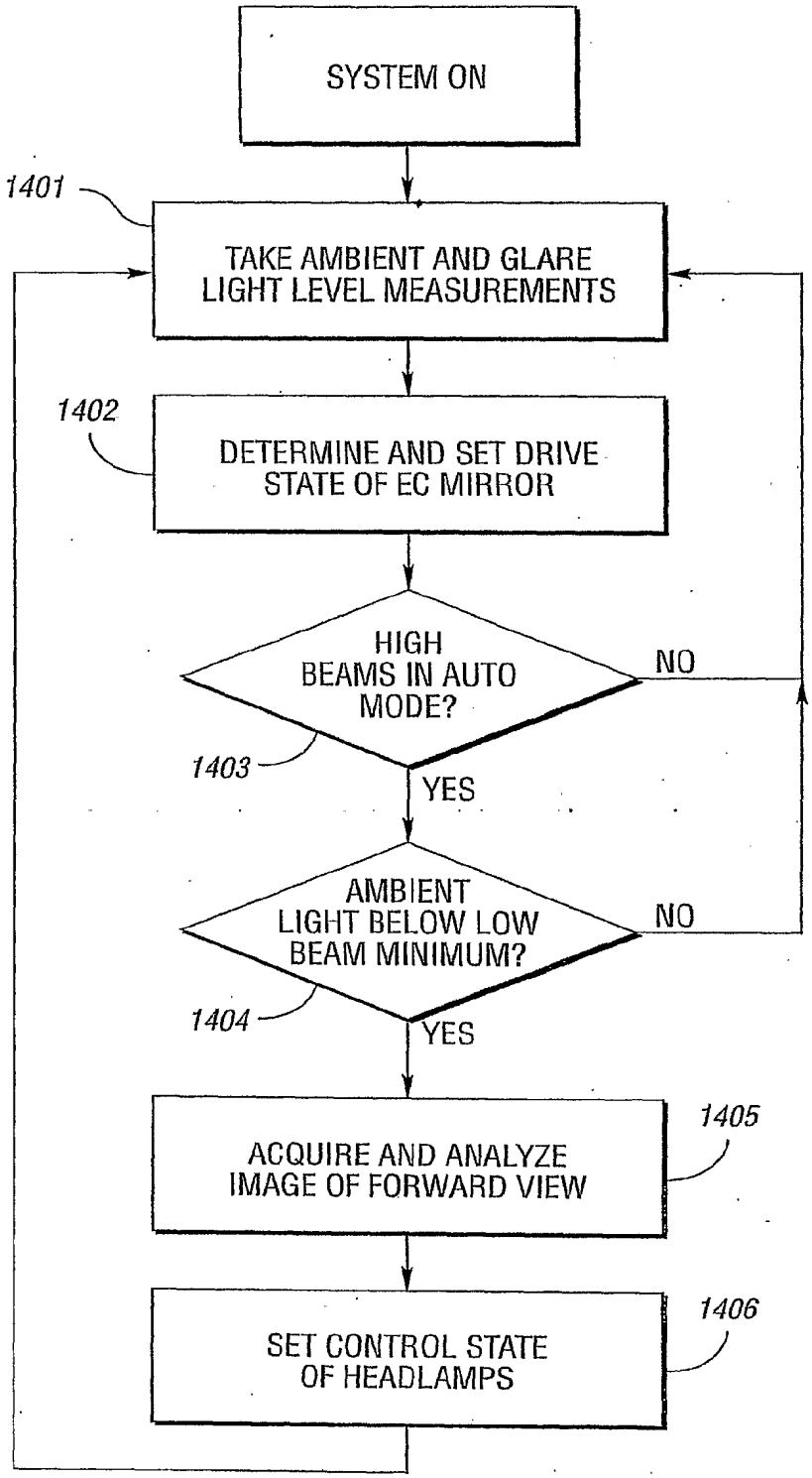
SYSTEM ON
1401
TAKE AMBIENT AND GLARE LIGHT LEVEL MEASUREMENTS
1402
DETERMINE AND SET DRIVE STATE OF EC MIRROR
HIGH BEAMS IN AUTO MODE?
NO
1403
YES
AMBIENT LIGHT BELOW LOW BEAM MINIMUM?
NO
1404
YES
ACQUIRE AND ANALYZE IMAGE OF FORWARD VIEW
1405
SET CONTROL STATE OF HEADLAMPS
1406

Fig. 14

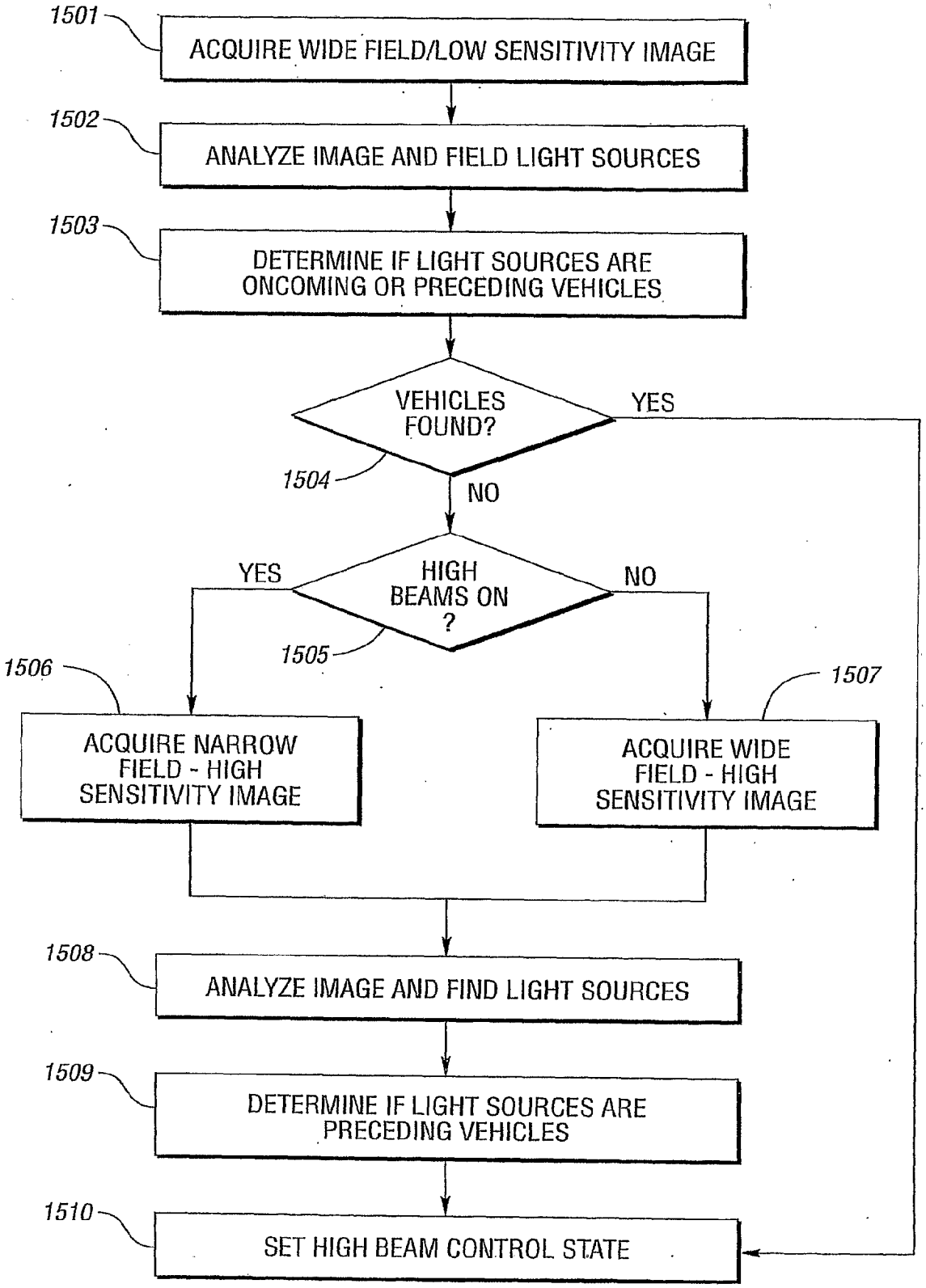
1501
ACQUIRE WIDE FIELD/LOW SENSITIVITY IMAGE
1502
ANALYZE IMAGE AND FIELD LIGHT SOURCES
1503
DETERMINE IF LIGHT SOURCES ARE ONCOMING OR PRECEDING VEHICLES
VEHICLES FOUND?
YES
1504
NO
YES
HIGH BEAMS ON ?
NO
1505
1506
1507
ACQUIRE NARROW FIELD - HIGH SENSITIVITY IMAGE
ACQUIRE WIDE FIELD - HIGH SENSITIVITY IMAGE
1508
ANALYZE IMAGE AND FIND LIGHT SOURCES
1509
DETERMINE IF LIGHT SOURCES ARE PRECEDING VEHICLES
1510
SET HIGH BEAM CONTROL STATE

Fig. 15

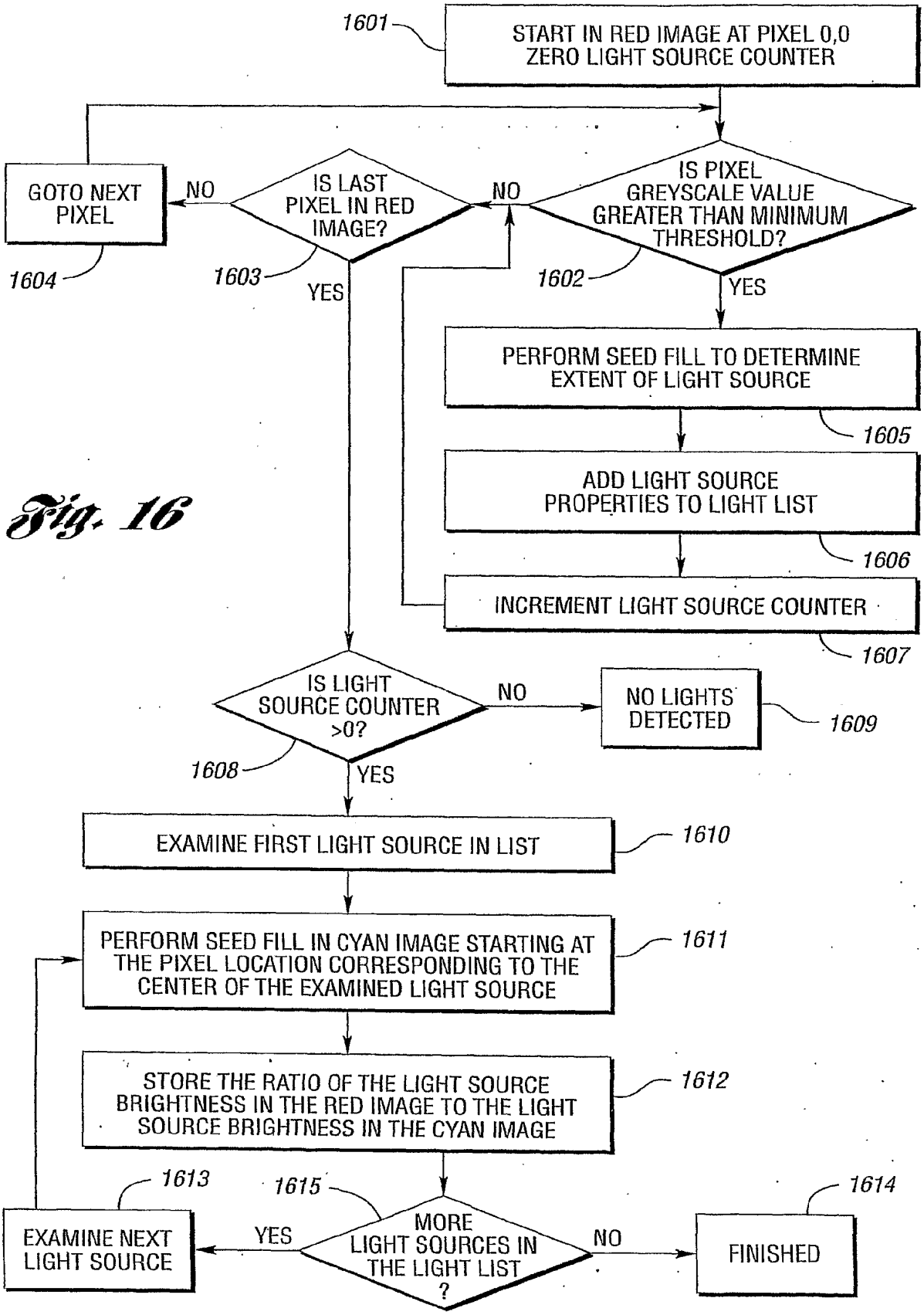
1601
START IN RED IMAGE AT PIXEL 0,0
ZERO LIGHT SOURCE COUNTER
GOTO NEXT PIXEL
NO
IS LAST PIXEL IN RED IMAGE?
NO
IS PIXEL GREYSCALE VALUE GREATER THAN MINIMUM THRESHOLD?
1604
1603
YES
1602
YES
PERFORM SEED FILL TO DETERMINE EXTENT OF LIGHT SOURCE
1605
ADD LIGHT SOURCE PROPERTIES TO LIGHT LIST
1606
INCREMENT LIGHT SOURCE COUNTER
1607
IS LIGHT SOURCE COUNTER >0?
NO
NO LIGHTS DETECTED
1609
1608
YES
EXAMINE FIRST LIGHT SOURCE IN LIST
1610
PERFORM SEED FILL IN CYAN IMAGE STARTING AT THE PIXEL LOCATION CORRESPONDING TO THE CENTER OF THE EXAMINED LIGHT SOURCE
1611
STORE THE RATIO OF THE LIGHT SOURCE BRIGHTNESS IN THE RED IMAGE TO THE LIGHT SOURCE BRIGHTNESS IN THE CYAN IMAGE
1612
1613
1615
1614
EXAMINE NEXT LIGHT SOURCE
YES
MORE LIGHT SOURCES IN THE LIGHT LIST ?
NO
FINISHED

Fig. 16

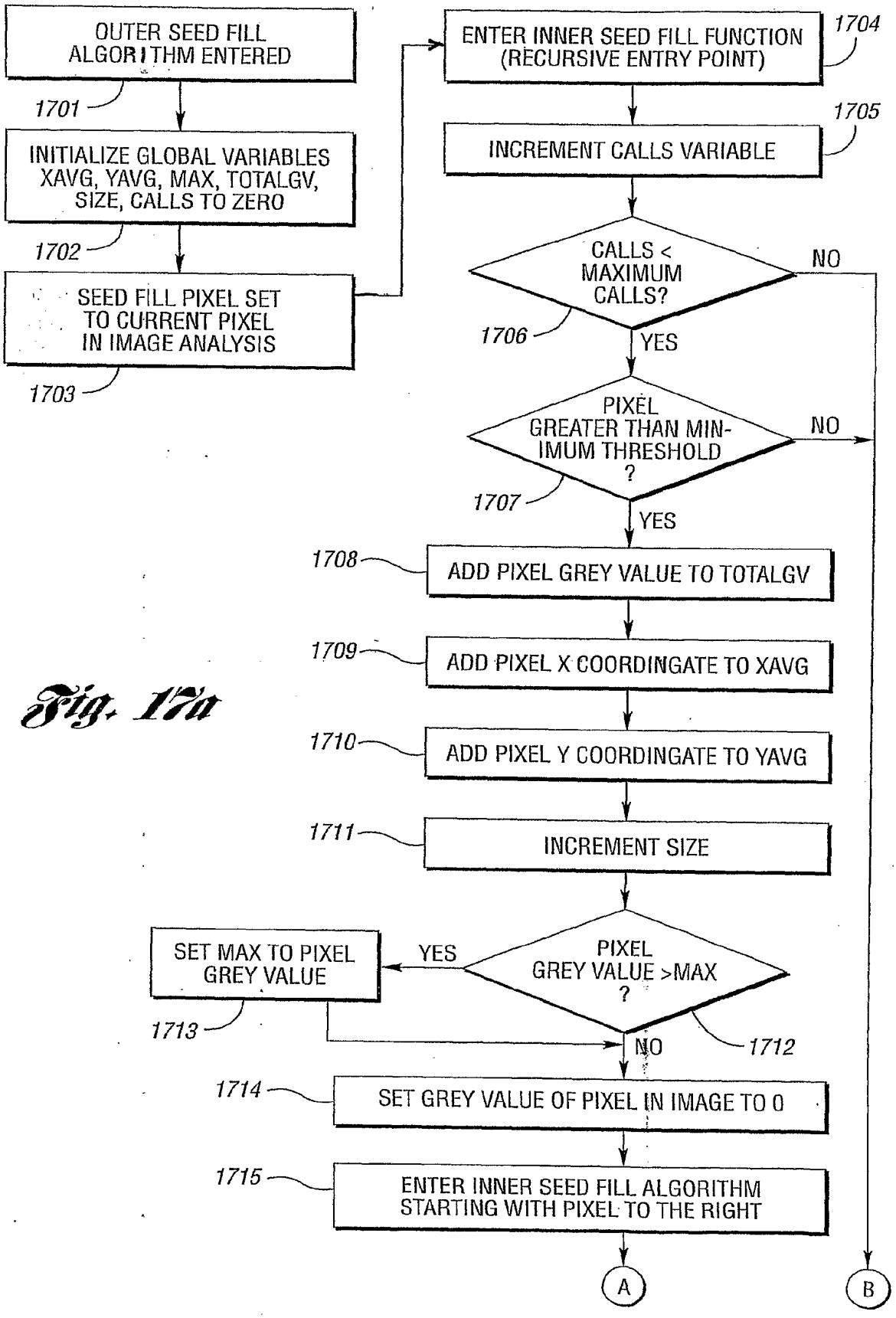
OUTER SEED FILL ALGORITHM ENTERED
1701
INITIALIZE GLOBAL VARIABLES XAVG, YAVG, MAX, TOTALGV, SIZE, CALLS TO ZERO
1702
SEED FILL PIXEL SET TO CURRENT PIXEL IN IMAGE ANALYSIS
1703
ENTER INNER SEED FILL FUNCTION (RECURSIVE ENTRY POINT)
1704
INCREMENT CALLS VARIABLE
1705
CALLS < MAXIMUM CALLS?
1706
NO
YES
PIXEL GREATER THAN MINIMUM THRESHOLD ?
1707
NO
YES
1708
ADD PIXEL GREY VALUE TO TOTALGV
1709
ADD PIXEL X COORDINGATE TO XAVG
1710
ADD PIXEL Y COORDINGATE TO YAVG
1711
INCREMENT SIZE
PIXEL GREY VALUE >MAX ?
YES
SET MAX TO PIXEL GREY VALUE
1713
NO
1712
1714
SET GREY VALUE OF PIXEL IN IMAGE TO 0
1715
ENTER INNER SEED FILL ALGORITHM STARTING WITH PIXEL TO THE RIGHT
A
B

Fig. 17a

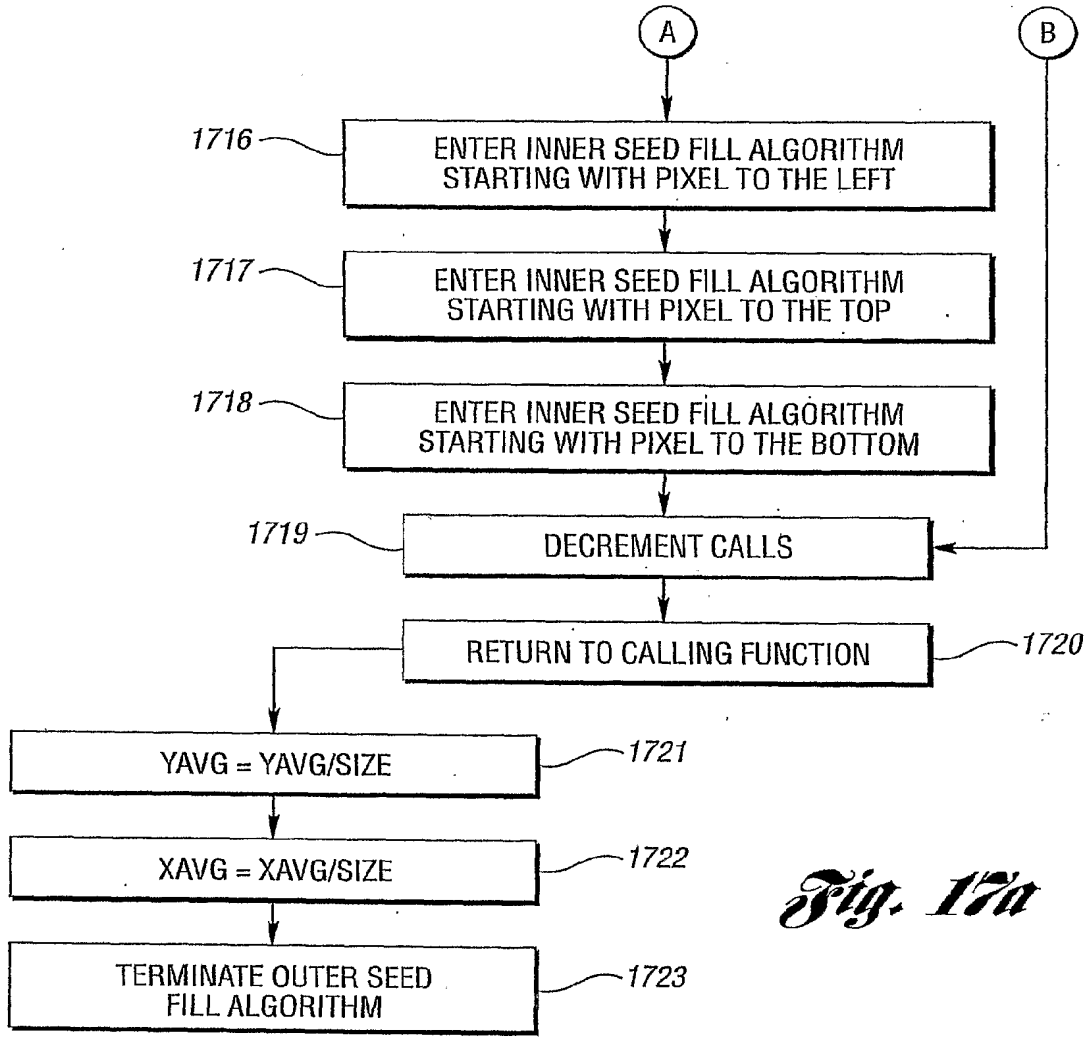

Fig. 17a

Fig. 17b

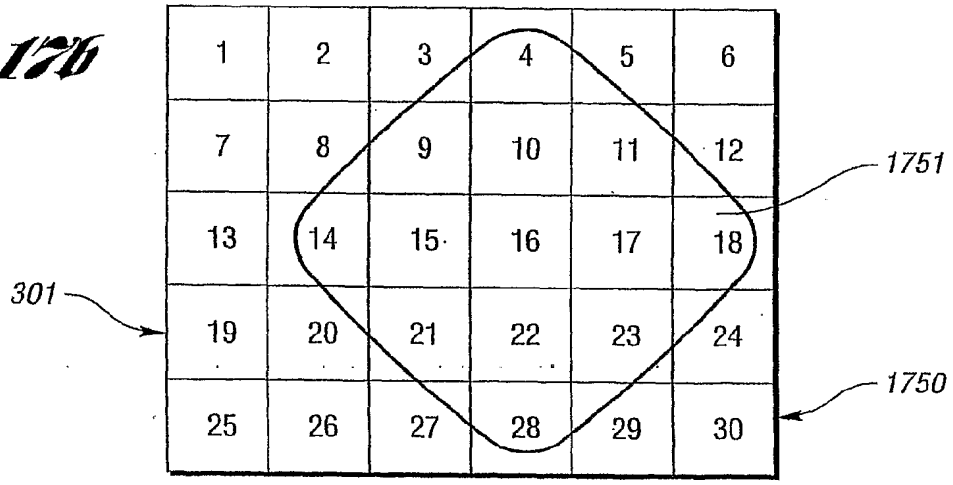

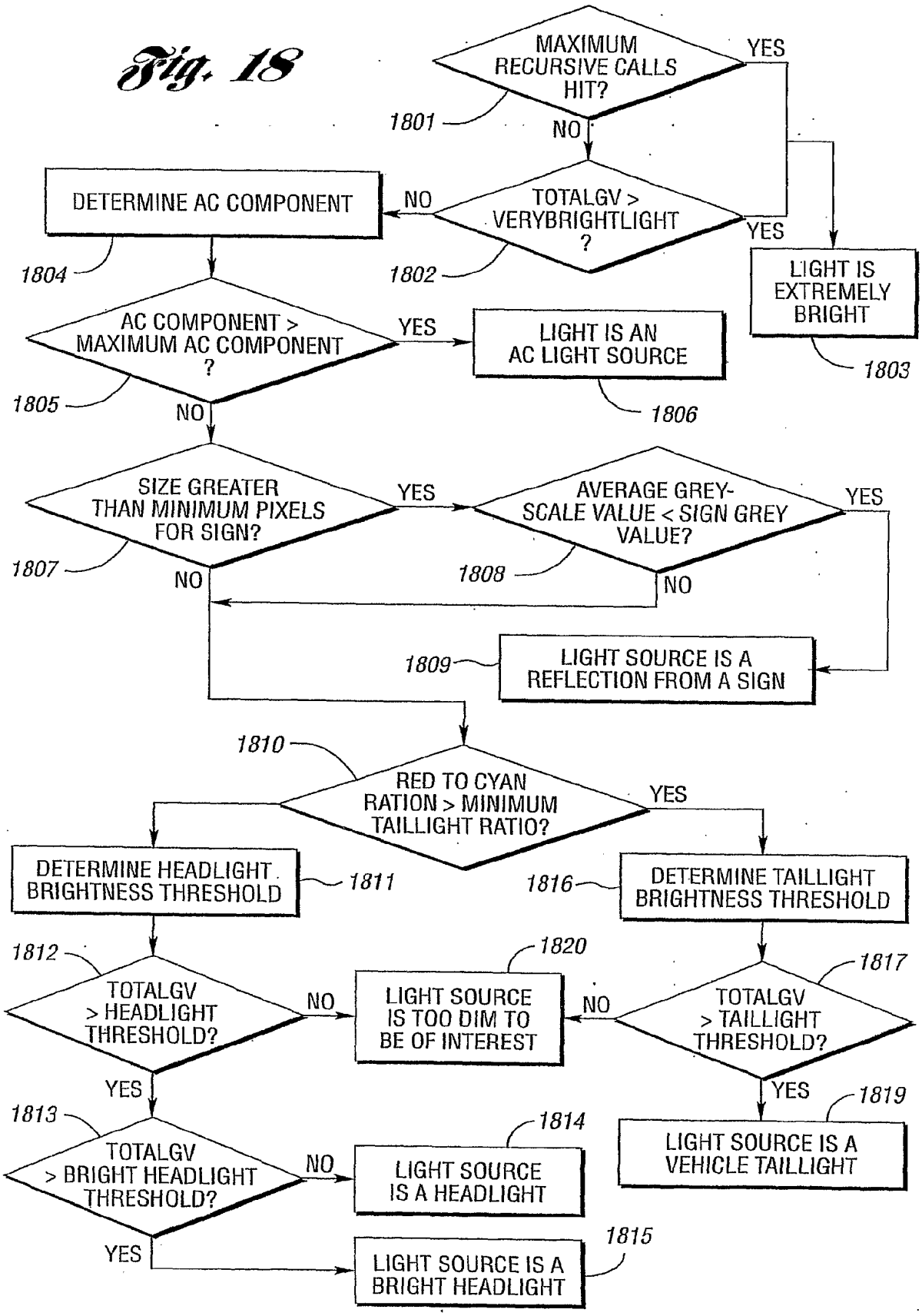
Fig. 18
MAXIMUM RECURSIVE CALLS HIT?
YES
NO
1801
TOTALGV > VERYBRIGHTLIGHT ?
NO
YES
1802
LIGHT IS EXTREMELY BRIGHT
1803
DETERMINE AC COMPONENT
1804
AC COMPONENT > MAXIMUM AC COMPONENT ?
YES
LIGHT IS AN AC LIGHT SOURCE
1806
1805
NO
SIZE GREATER THAN MINIMUM PIXELS FOR SIGN?
YES
AVERAGE GREY-SCALE VALUE < SIGN GREY VALUE?
YES
1807
NO
1808
NO
1809
LIGHT SOURCE IS A REFLECTION FROM A SIGN
1810
RED TO CYAN RATION > MINIMUM TAILLIGHT RATIO?
YES
DETERMINE HEADLIGHT BRIGHTNESS THRESHOLD
1811
1816
DETERMINE TAILLIGHT BRIGHTNESS THRESHOLD
1812
TOTALGV > HEADLIGHT THRESHOLD?
NO
1820
LIGHT SOURCE IS TOO DIM TO BE OF INTEREST
NO
1817
TOTALGV > TAILLIGHT THRESHOLD?
YES
YES
1819
LIGHT SOURCE IS A VEHICLE TAILLIGHT
1813
TOTALGV > BRIGHT HEADLIGHT THRESHOLD?
NO
1814
LIGHT SOURCE IS A HEADLIGHT
YES
1815
LIGHT SOURCE IS A BRIGHT HEADLIGHT

16/40

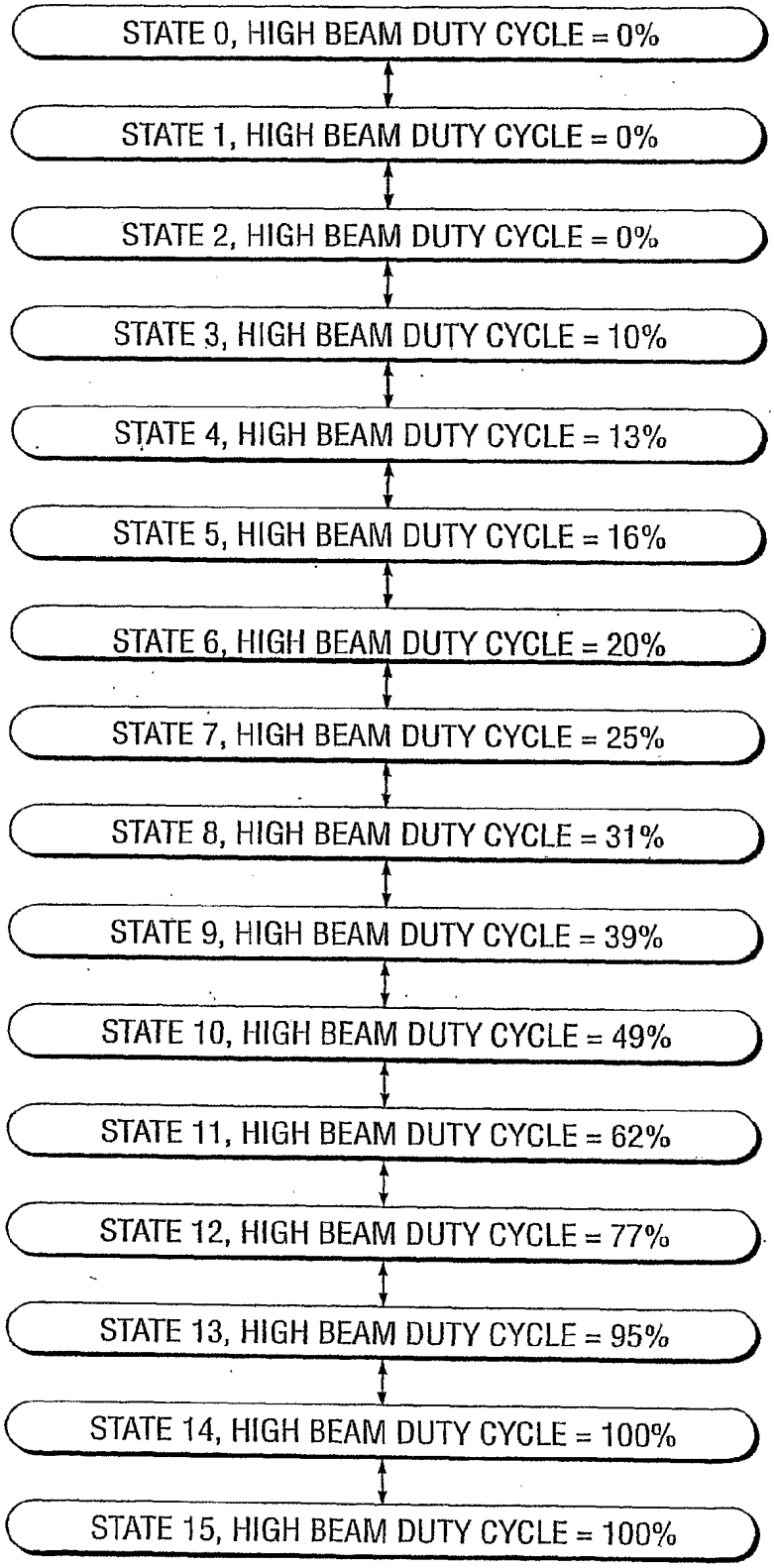
STATE 0, HIGH BEAM DUTY CYCLE = 0%
STATE 1, HIGH BEAM DUTY CYCLE = 0%
STATE 2, HIGH BEAM DUTY CYCLE = 0%
STATE 3, HIGH BEAM DUTY CYCLE = 10%
STATE 4, HIGH BEAM DUTY CYCLE = 13%
STATE 5, HIGH BEAM DUTY CYCLE = 16%
STATE 6, HIGH BEAM DUTY CYCLE = 20%
STATE 7, HIGH BEAM DUTY CYCLE = 25%
STATE 8, HIGH BEAM DUTY CYCLE = 31%
STATE 9, HIGH BEAM DUTY CYCLE = 39%
STATE 10, HIGH BEAM DUTY CYCLE = 49%
STATE 11, HIGH BEAM DUTY CYCLE = 62%
STATE 12, HIGH BEAM DUTY CYCLE = 77%
STATE 13, HIGH BEAM DUTY CYCLE = 95%
STATE 14, HIGH BEAM DUTY CYCLE = 100%
STATE 15, HIGH BEAM DUTY CYCLE = 100%

Fig. 19

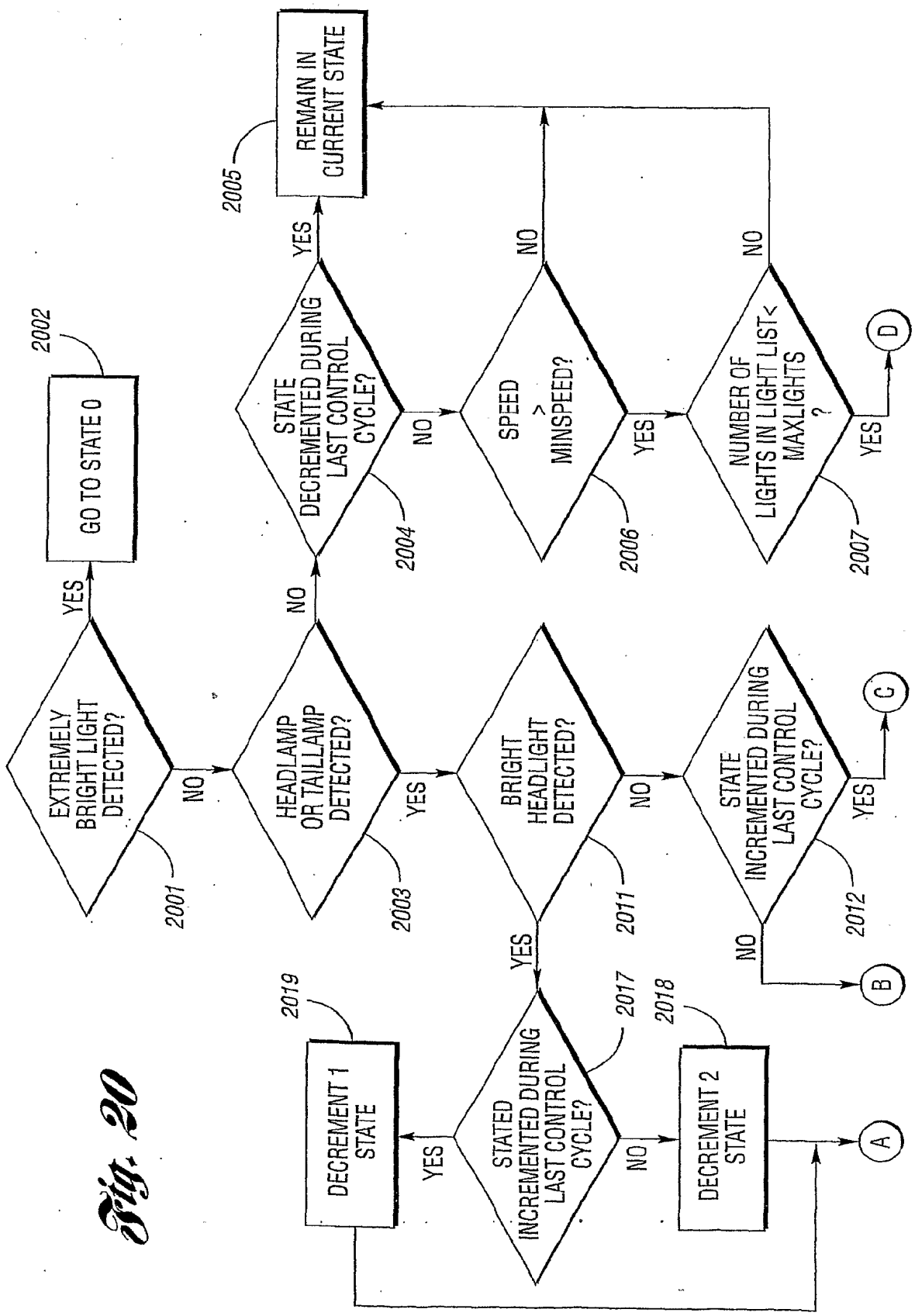
EXTREMELY BRIGHT LIGHT DETECTED?
2001
YES
NO
GO TO STATE 0
2002
HEADLAMP OR TAILLAMP DETECTED?
2003
YES
NO
STATE DECREMENTED DURING LAST CONTROL CYCLE?
2004
YES
NO
REMAIN IN CURRENT STATE
2005
SPEED > MINSPEED?
2006
YES
NO
NUMBER OF LIGHTS IN LIGHT LIST< MAXLIGHTS ?
2007
YES
NO
D
BRIGHT HEADLIGHT DETECTED?
2011
YES
NO
STATE INCREMENTED DURING LAST CONTROL CYCLE?
2012
YES
NO
C
B
STATED INCREMENTED DURING LAST CONTROL CYCLE?
2017
YES
NO
DECREMENT 1 STATE
2019
DECREMENT 2 STATE
2018
A

Fig. 20

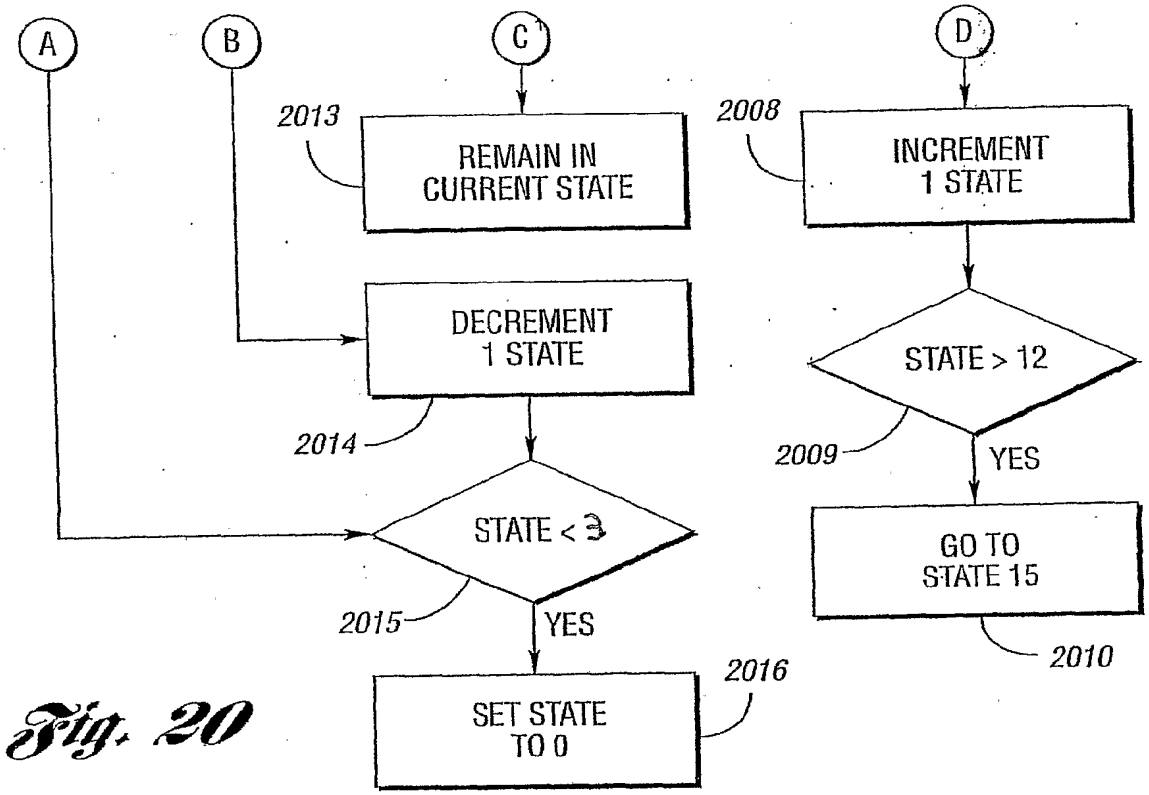
A
B
C
D
2013
REMAIN IN CURRENT STATE
2008
INCREMENT 1 STATE
DECREMENT 1 STATE
STATE > 12
2014
2009
YES
STATE < 3
GO TO STATE 15
2015
YES
2010
2016
SET STATE TO 0

Fig. 20

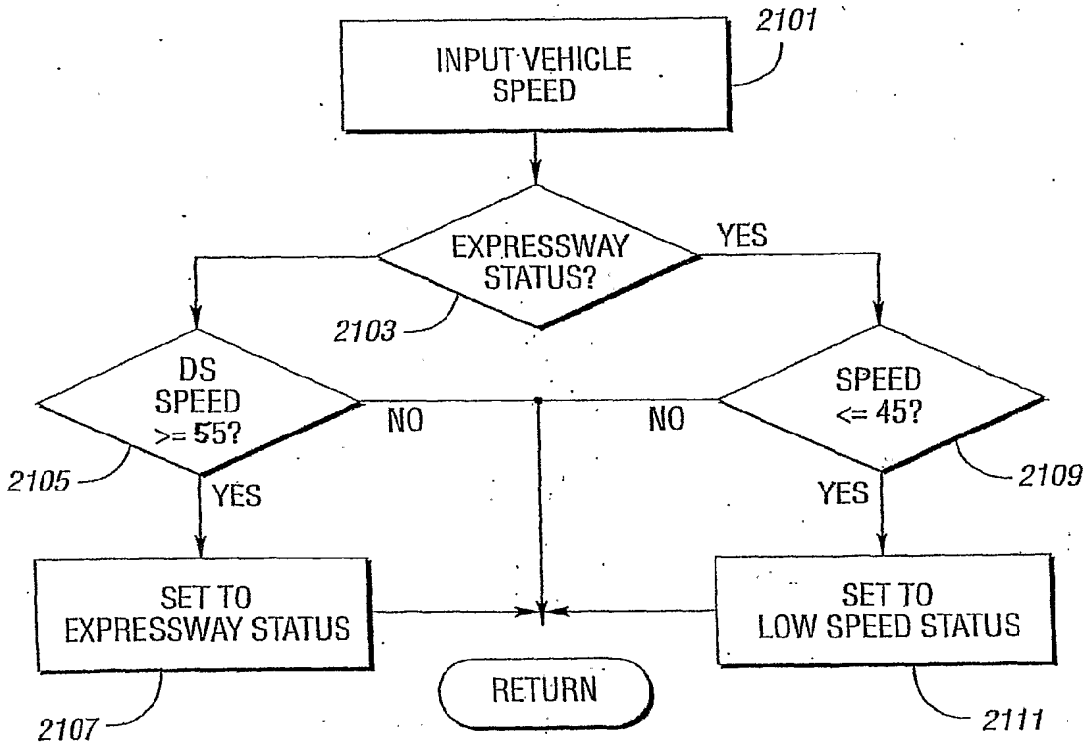
2101
INPUT VEHICLE SPEED
EXPRESSWAY STATUS?
YES
2103
DS SPEED >= 55?
NO
NO
SPEED <= 45?
2105
YES
YES
2109
SET TO EXPRESSWAY STATUS
SET TO LOW SPEED STATUS
RETURN
2107
2111

Fig. 21

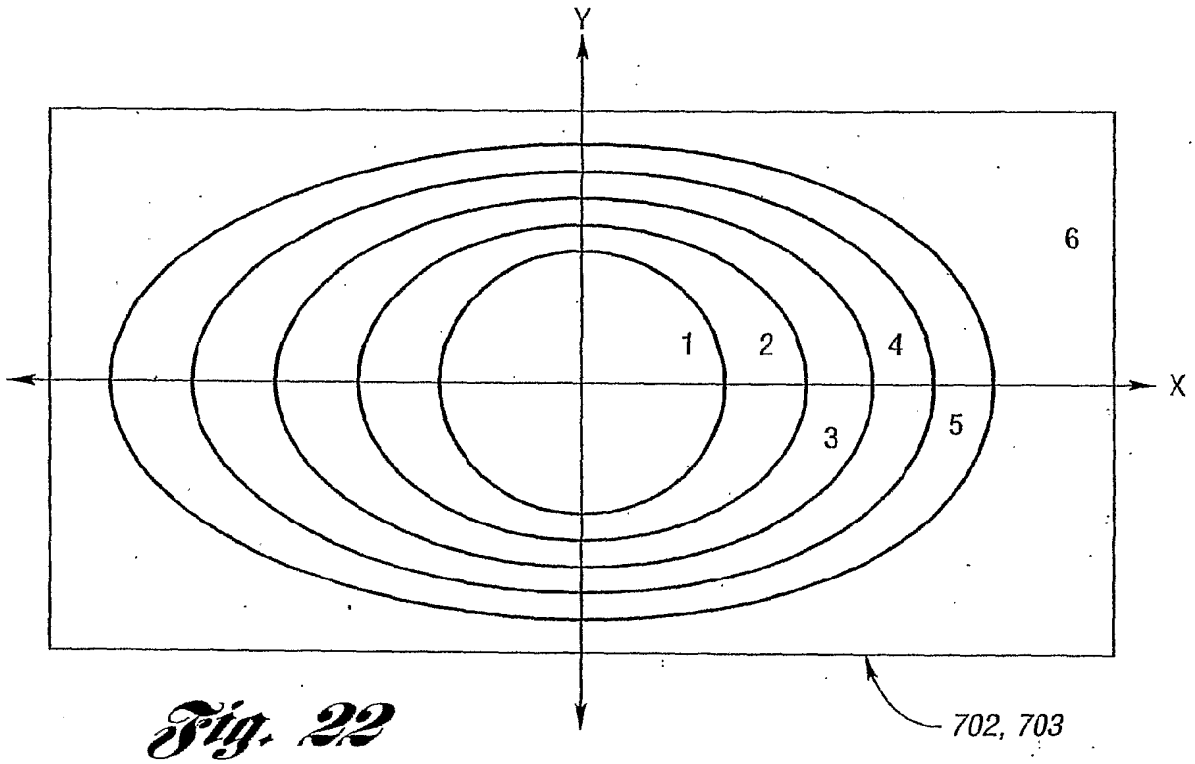
Y
X
1
2
3
4
5
6
702, 703

Fig. 22

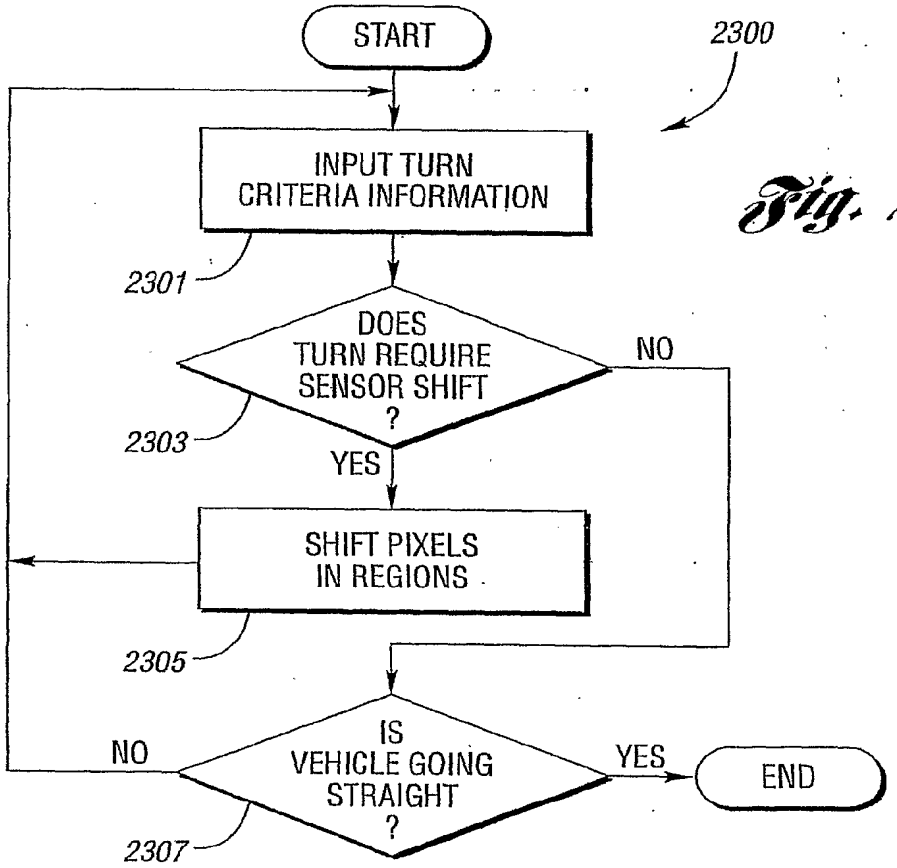
START
2300
INPUT TURN CRITERIA INFORMATION
2301
DOES TURN REQUIRE SENSOR SHIFT ?
2303
NO
YES
SHIFT PIXELS IN REGIONS
2305
IS VEHICLE GOING STRAIGHT ?
2307
NO
YES
END

Fig. 23

Fig. 24

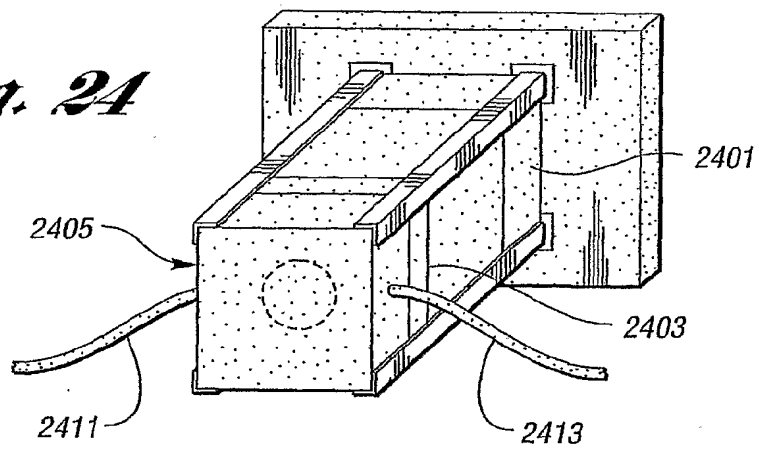

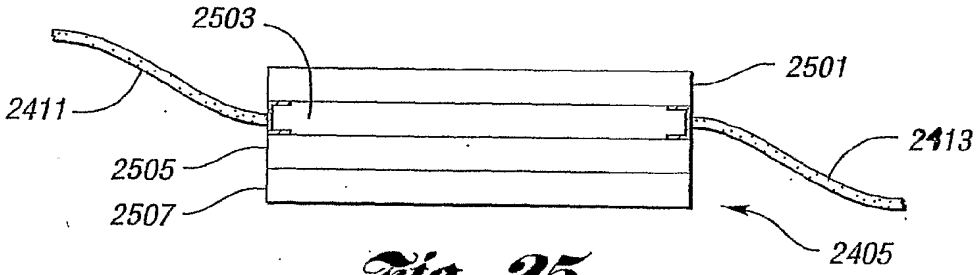

Fig. 25

Fig. 26b

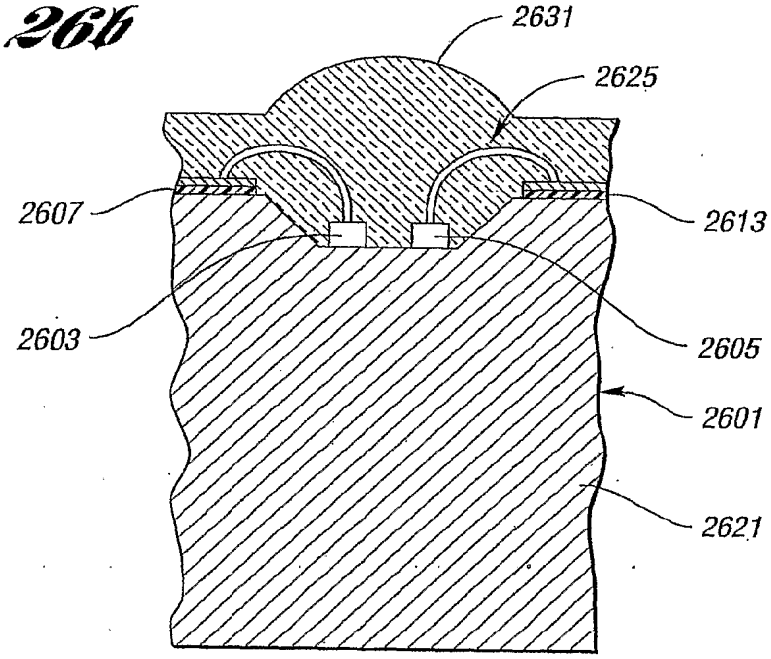

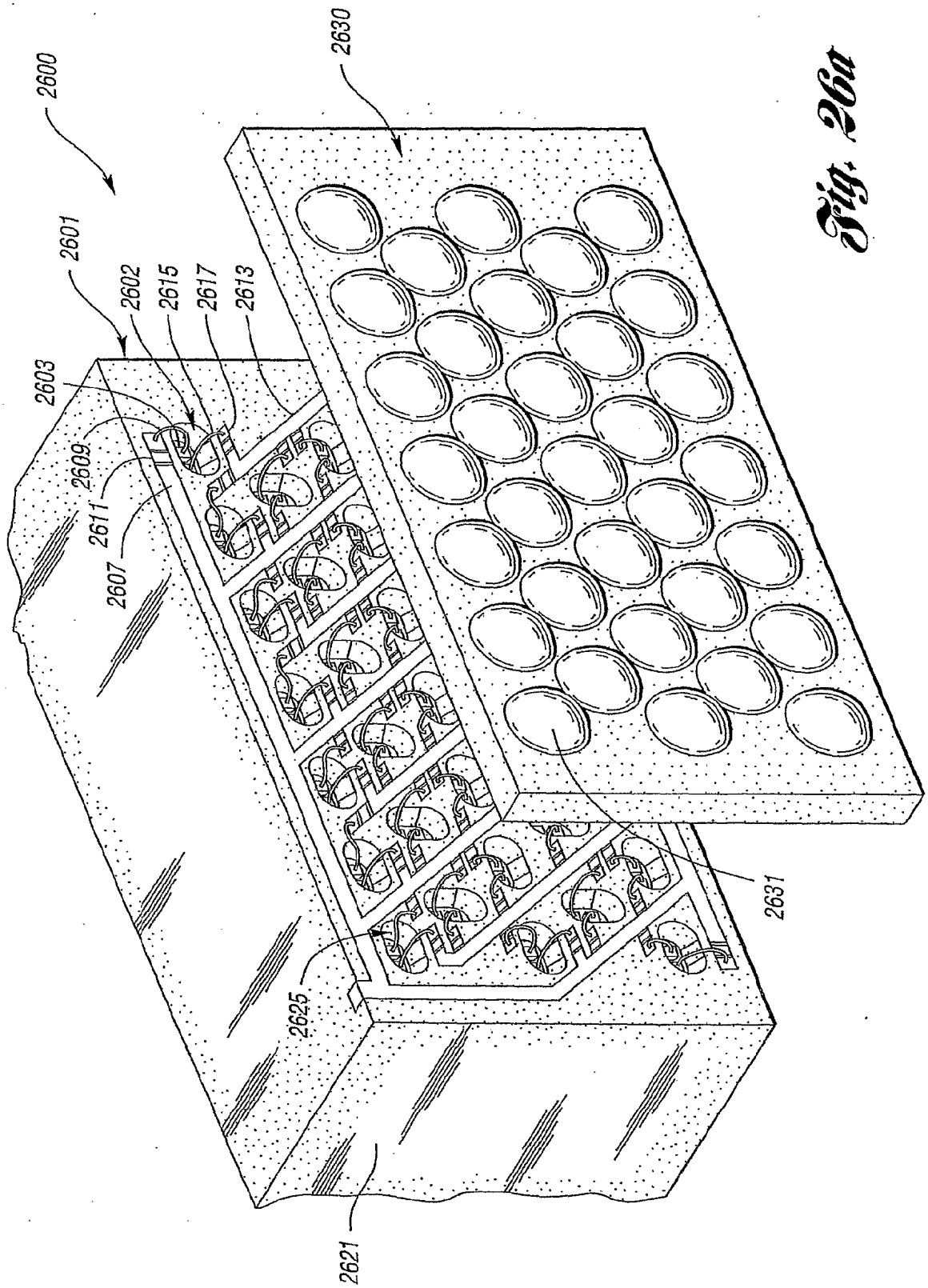
2600
2601
2602
2603
2607
2609
2611
2615
2617
2613
2630
2631
2625
2621

Fig. 26a

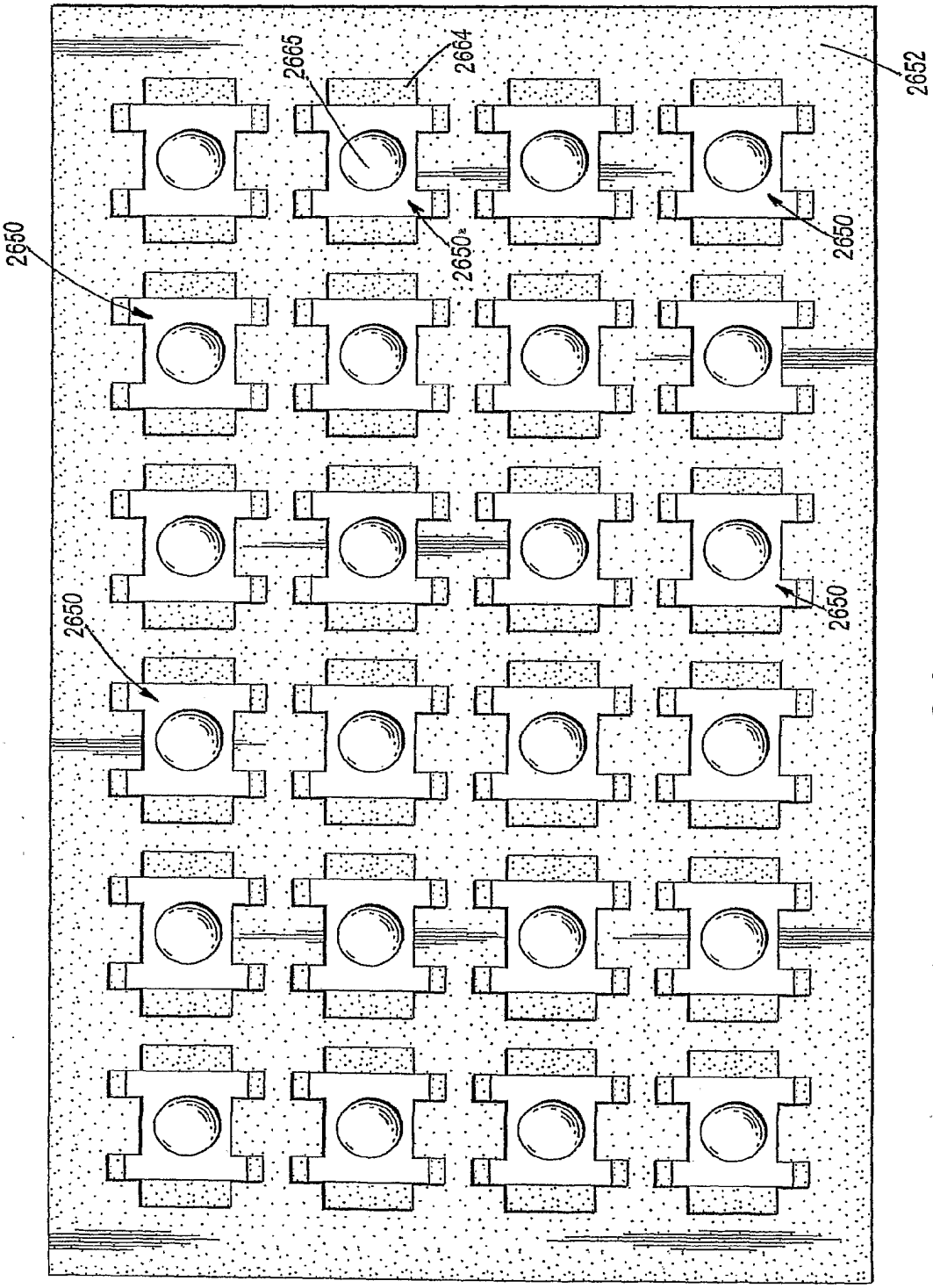

Fig. 26c

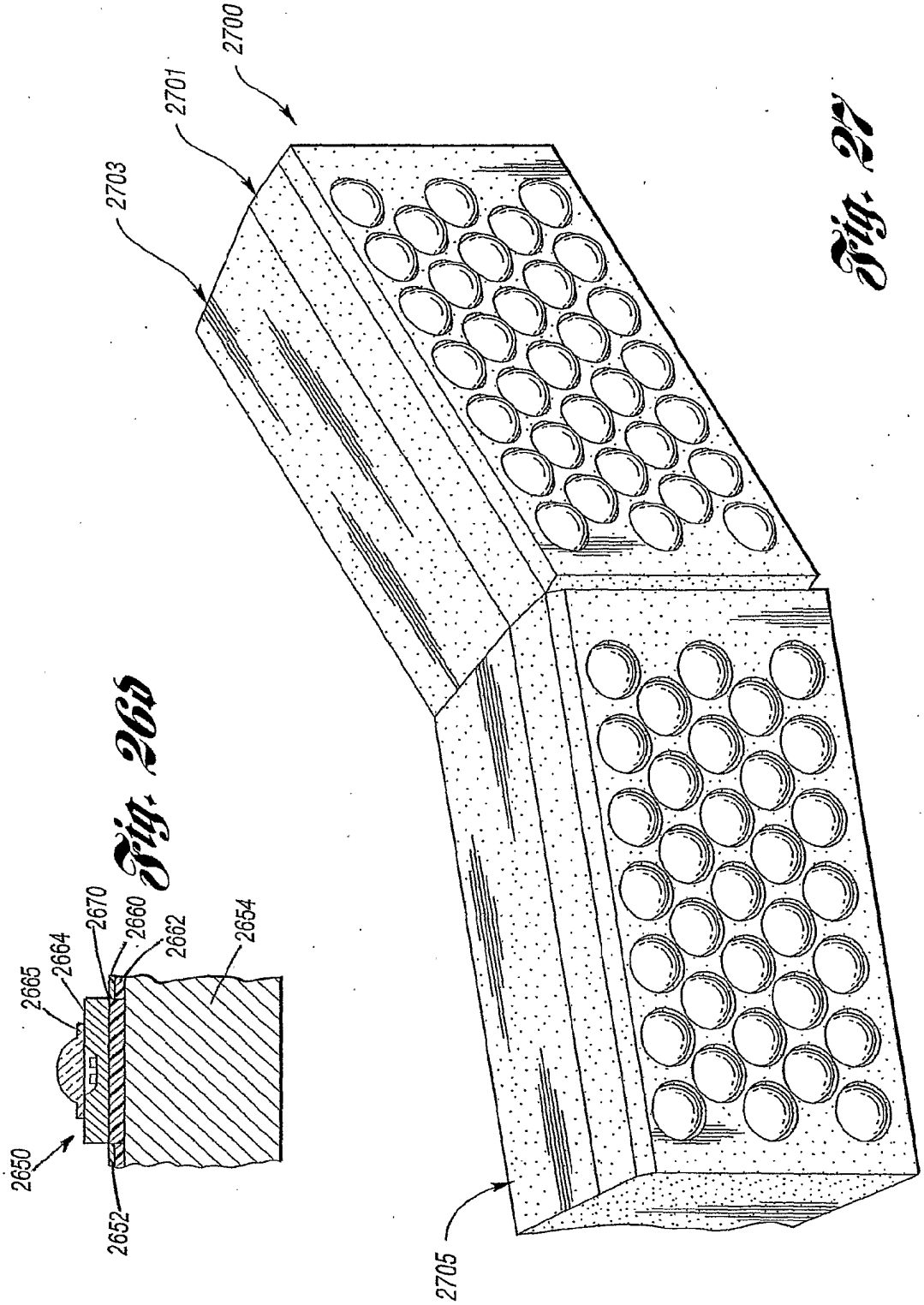

Fig. 26b

Fig. 27

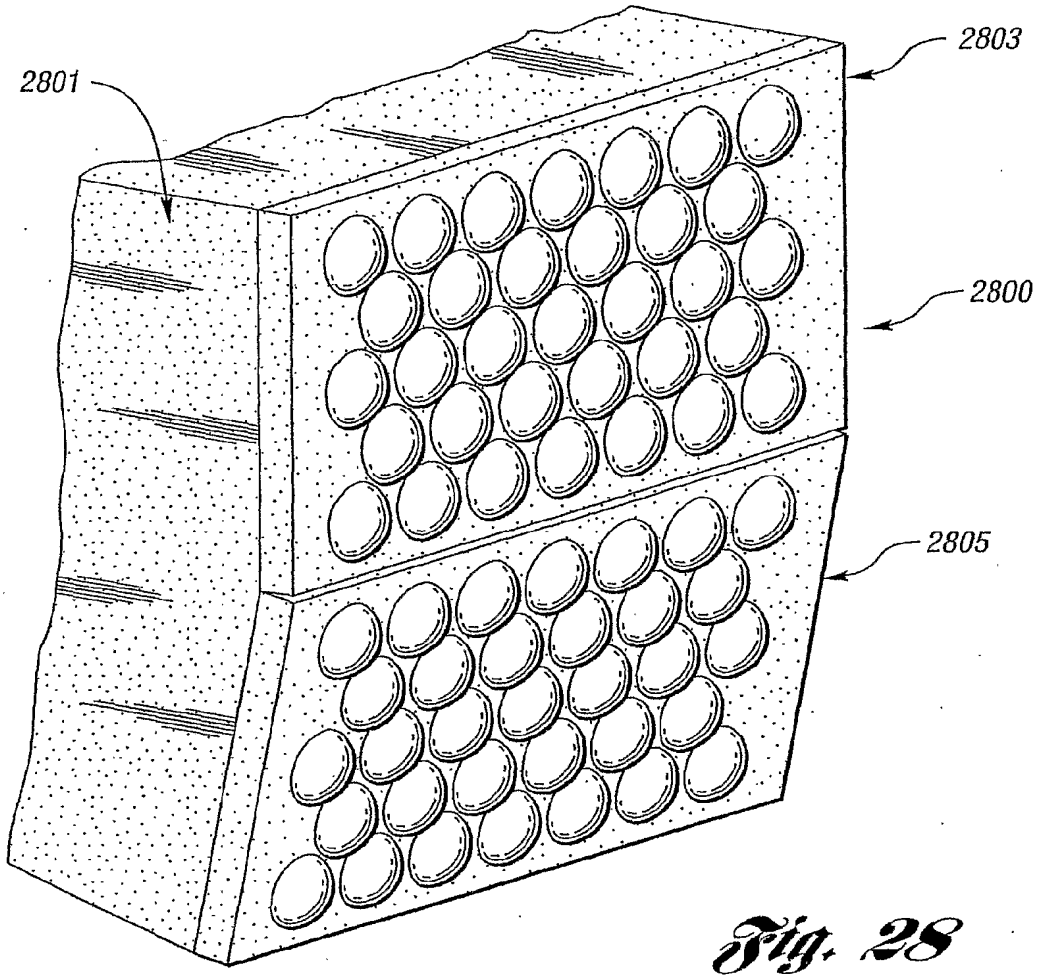
2801
2803
2800
2805

Fig. 28

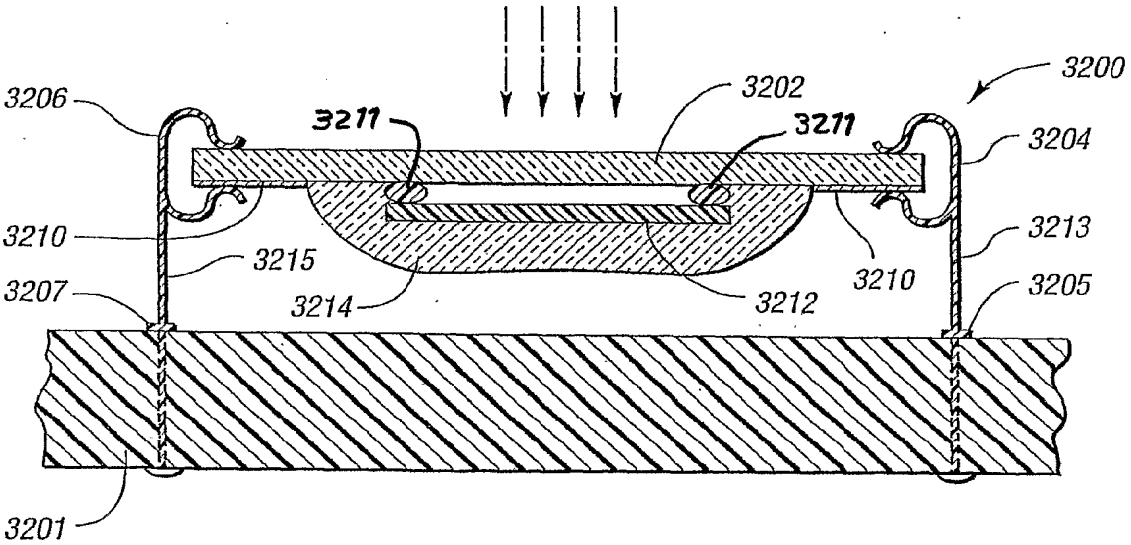
3200
3206
3202
3211
3211
3204
3210
3213
3215
3210
3207
3214
3212
3205
3201

Fig. 32

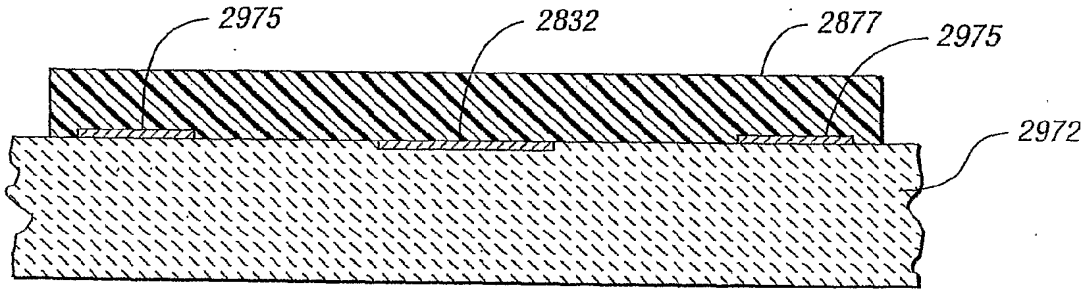

Fig. 29a

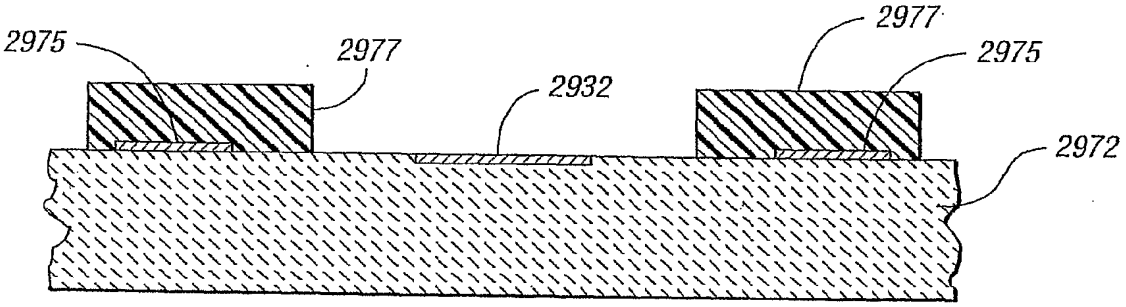

Fig. 29b

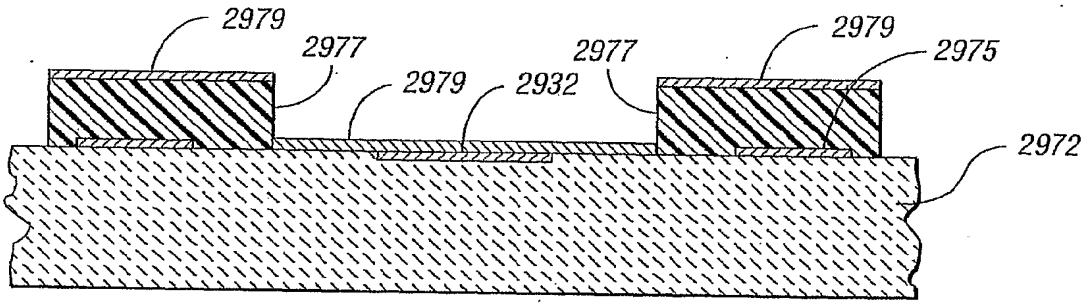

Fig. 29c

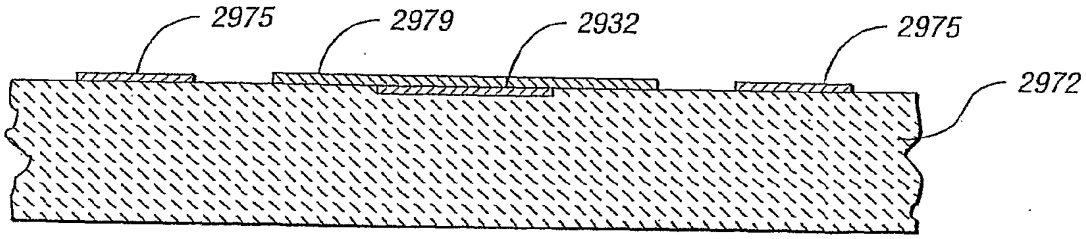

Fig. 29d

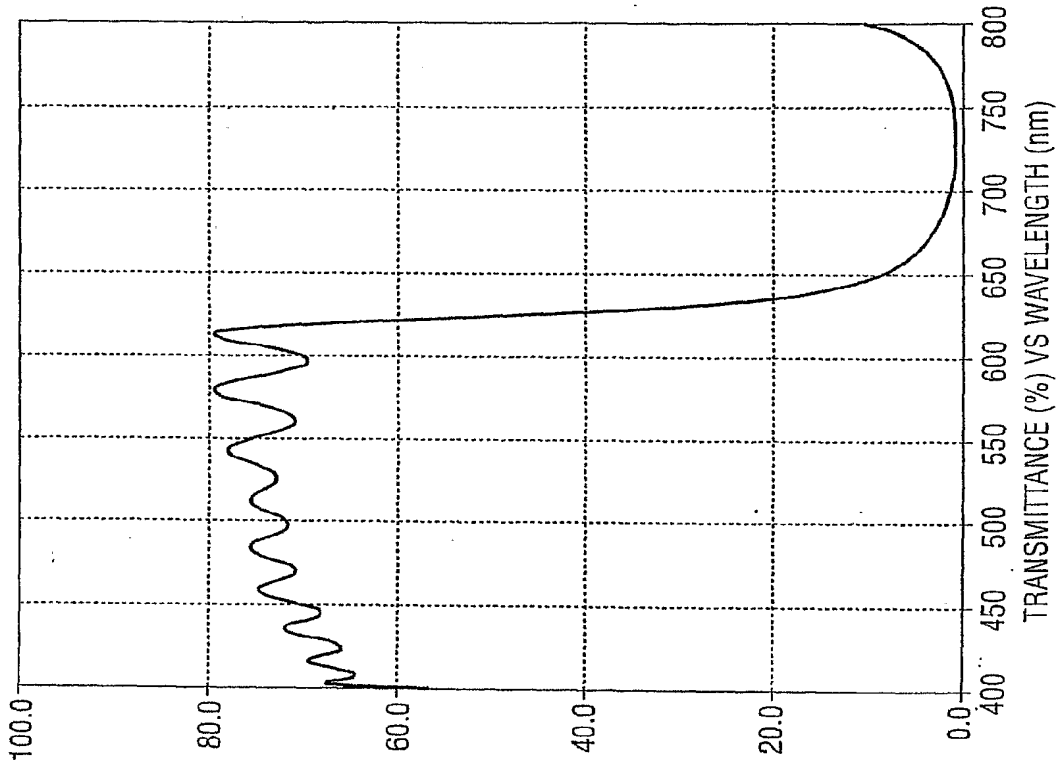
100.0
80.0
60.0
40.0
20.0
0.0
400
450
500
550
600
650
700
750
800
TRANSMITTANCE (%) VS WAVELENGTH (nm)

Fig. 31

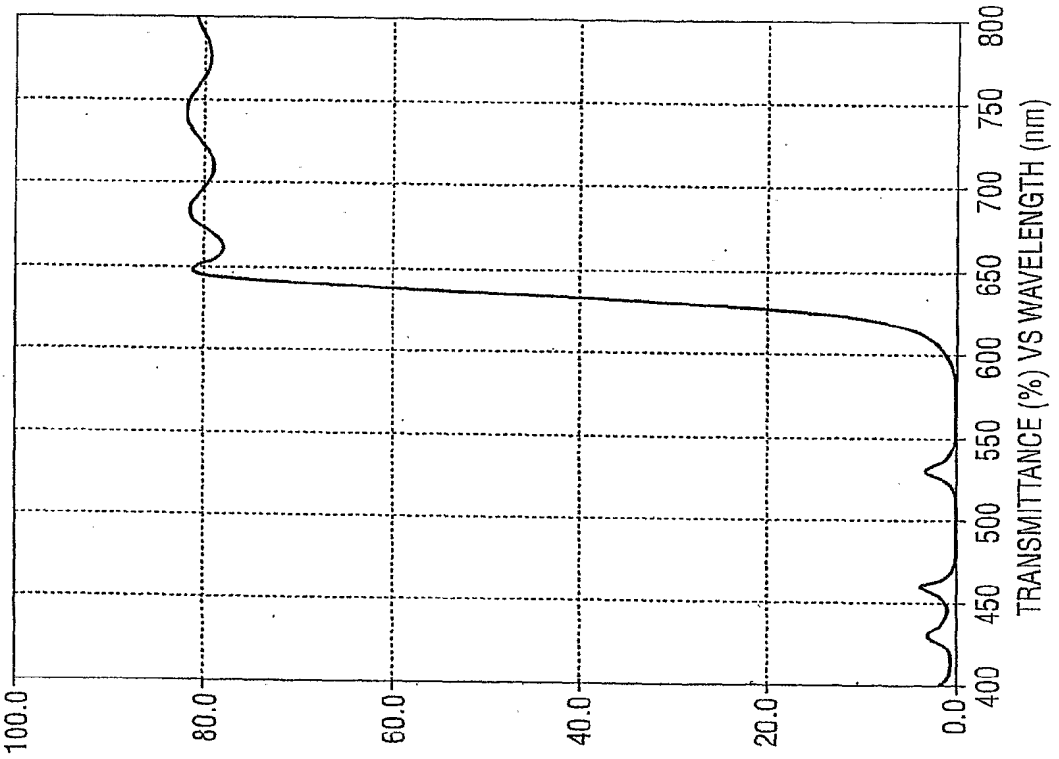
100.0
80.0
60.0
40.0
20.0
0.0
400
450
500
550
600
650
700
750
800
TRANSMITTANCE (%) VS WAVELENGTH (nm)

Fig. 30

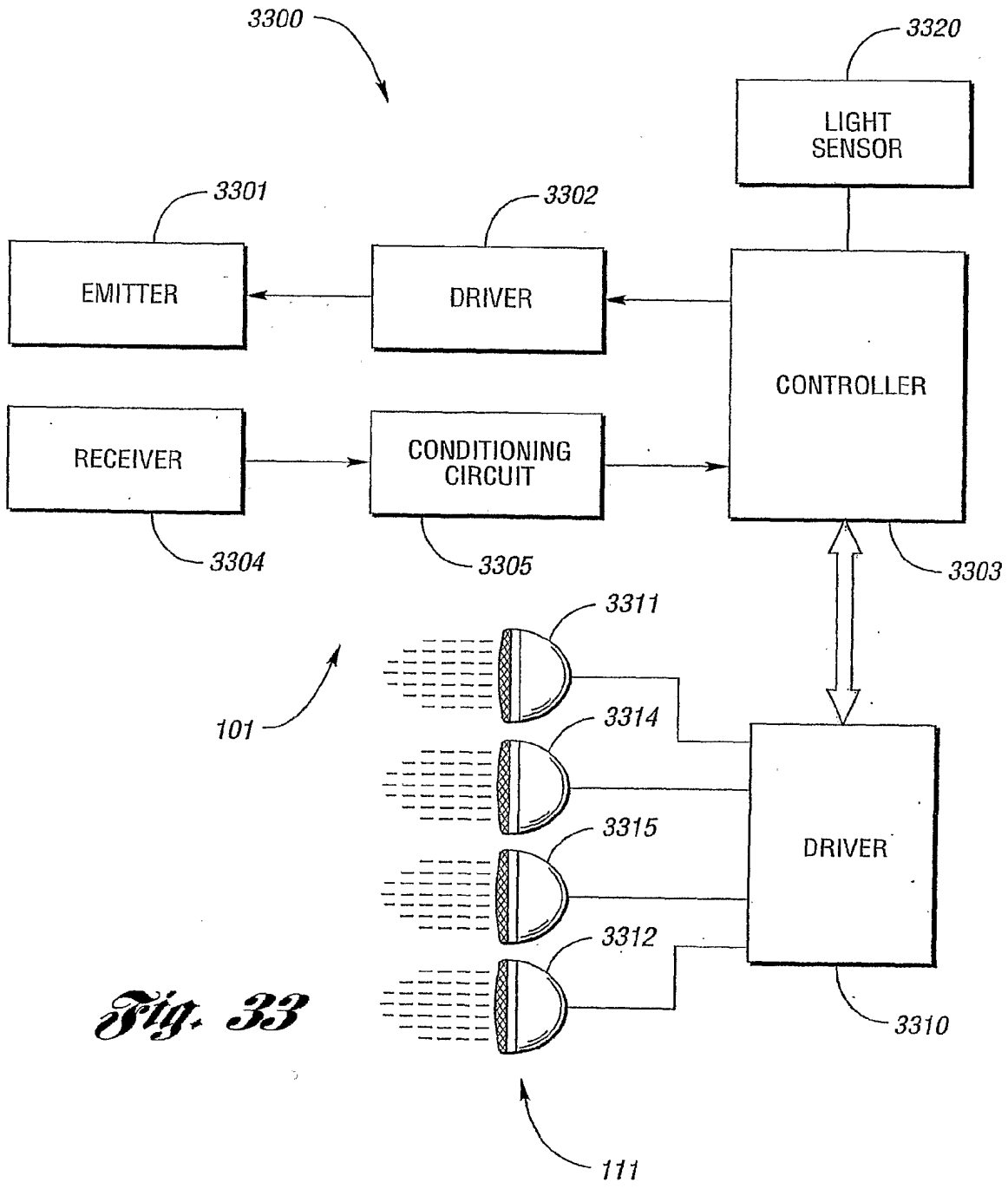
3300
3320
LIGHT SENSOR
3301
3302
EMITTER
DRIVER
CONTROLLER
RECEIVER
CONDITIONING CIRCUIT
3304
3305
3303
3311
101
3314
3315
DRIVER
3312
3310
111

Fig. 33

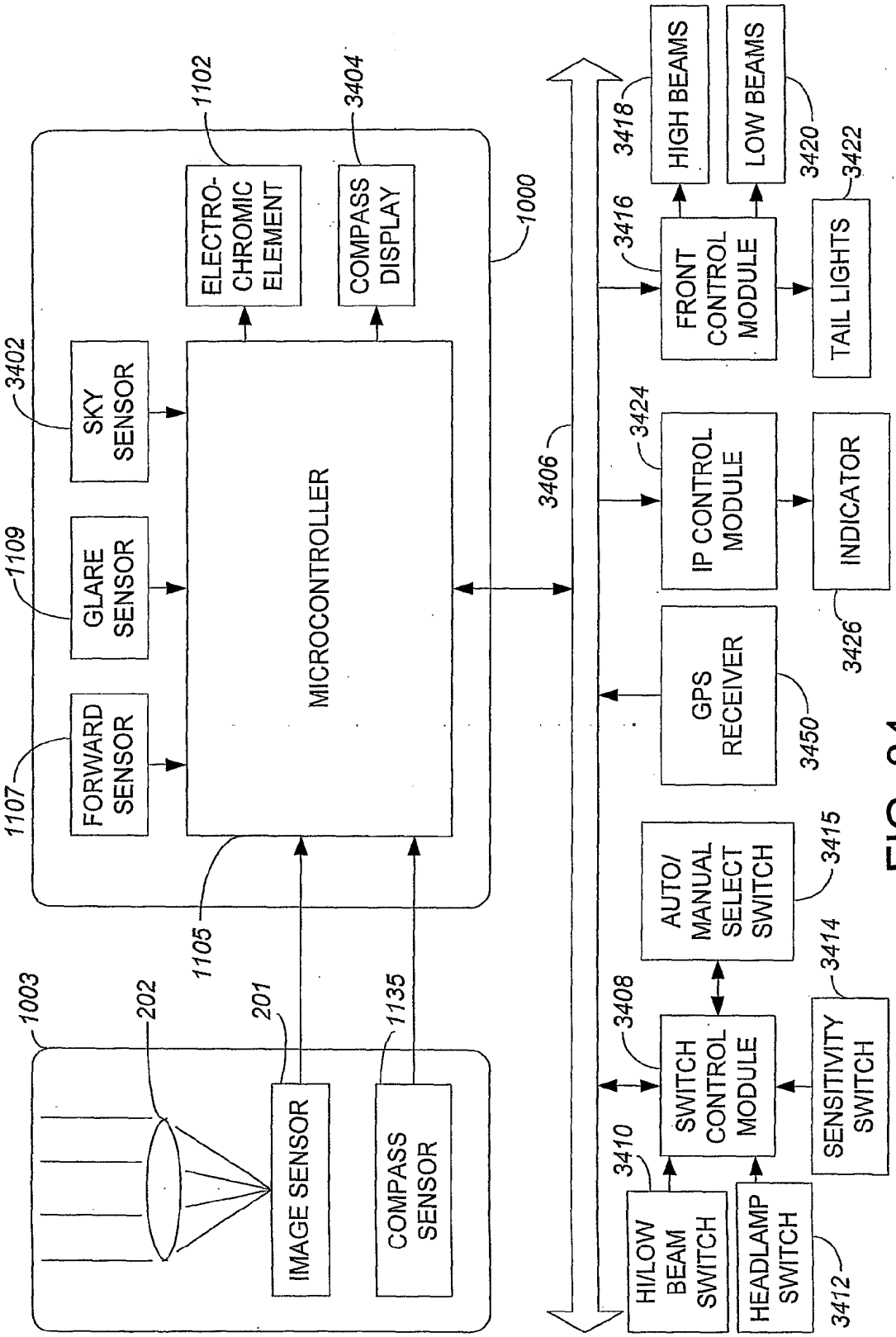
1000
1102
ELECTRO-CHROMIC ELEMENT
3404
COMPASS DISPLAY
3402
SKY SENSOR
1109
GLARE SENSOR
1107
FORWARD SENSOR
MICROCONTROLLER
1105
1003
202
201
IMAGE SENSOR
1135
COMPASS SENSOR
3406
3418
HIGH BEAMS
LOW BEAMS
3420
3416
FRONT CONTROL MODULE
TAIL LIGHTS
3422
3424
IP CONTROL MODULE
INDICATOR
3426
GPS RECEIVER
3450
AUTO/ MANUAL SELECT SWITCH
3415
3408
SWITCH CONTROL MODULE
3414
SENSITIVITY SWITCH
3410
HI/LOW BEAM SWITCH
HEADLAMP SWITCH
3412

FIG. 34

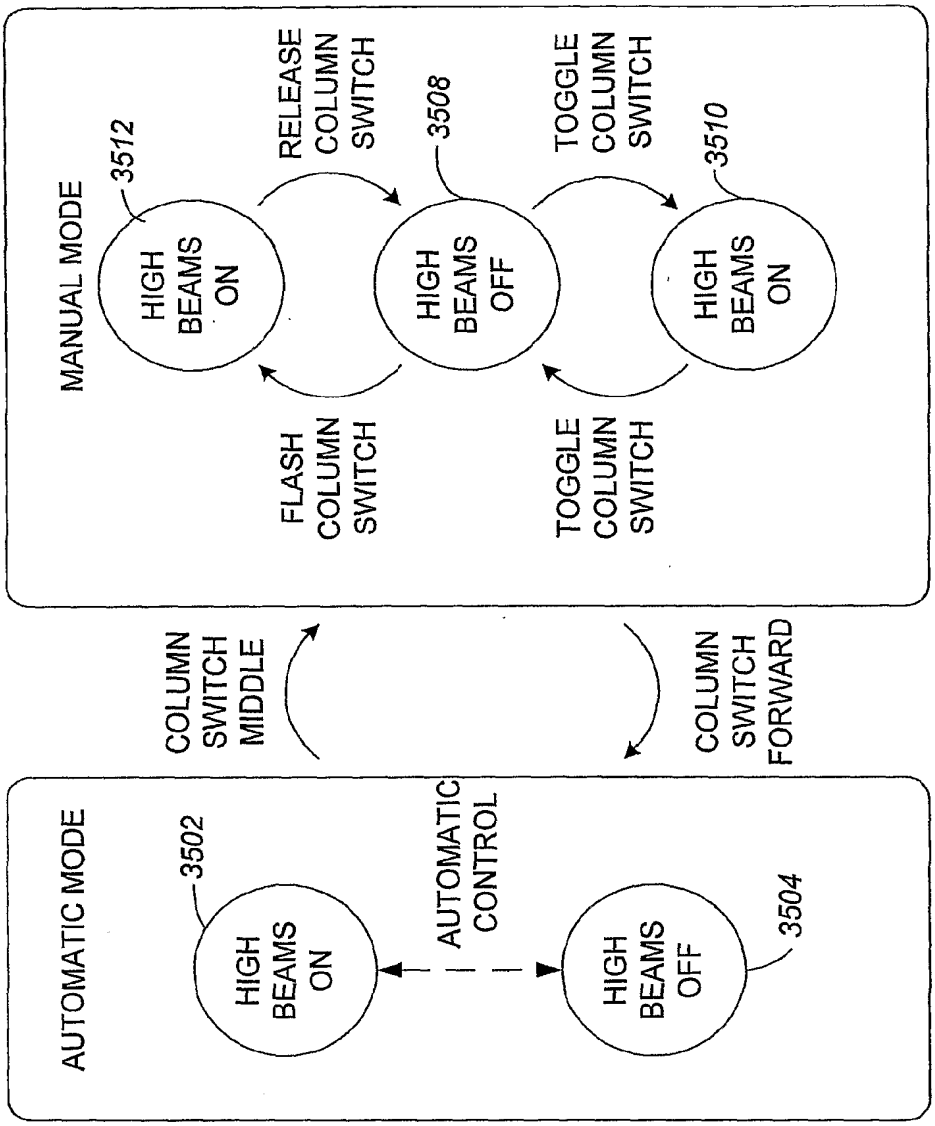
MANUAL MODE
3512
HIGH BEAMS ON
RELEASE COLUMN SWITCH
3508
HIGH BEAMS OFF
TOGGLE COLUMN SWITCH
3510
HIGH BEAMS ON
FLASH COLUMN SWITCH
TOGGLE COLUMN SWITCH
COLUMN SWITCH MIDDLE
COLUMN SWITCH FORWARD
AUTOMATIC MODE
3502
HIGH BEAMS ON
AUTOMATIC CONTROL
HIGH BEAMS OFF
3504

FIG. 35

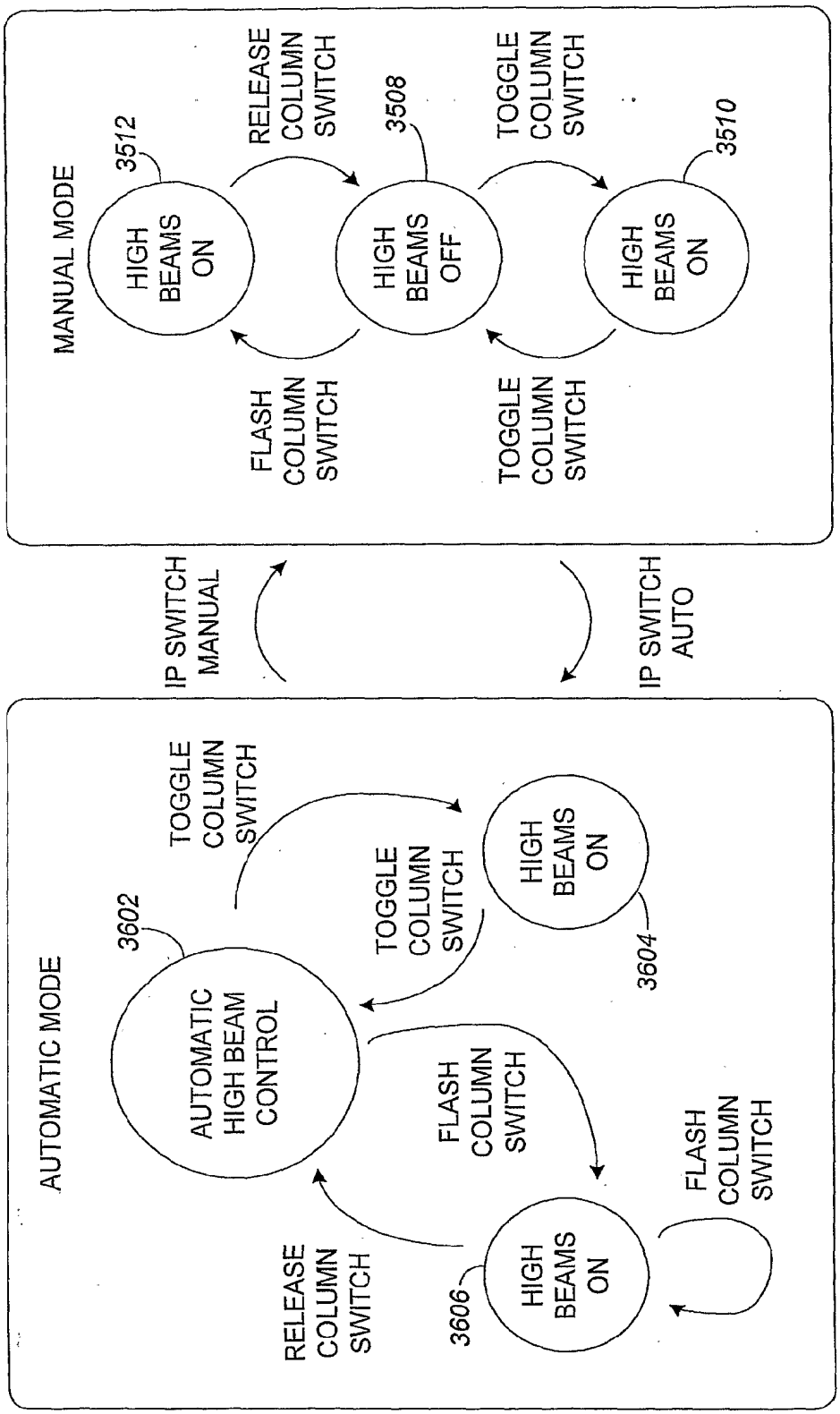
MANUAL MODE
3512
HIGH BEAMS ON
RELEASE COLUMN SWITCH
3508
HIGH BEAMS OFF
TOGGLE COLUMN SWITCH
3510
HIGH BEAMS ON
FLASH COLUMN SWITCH
TOGGLE COLUMN SWITCH
IP SWITCH MANUAL
IP SWITCH AUTO
AUTOMATIC MODE
3602
AUTOMATIC HIGH BEAM CONTROL
TOGGLE COLUMN SWITCH
TOGGLE COLUMN SWITCH
HIGH BEAMS ON
3604
FLASH COLUMN SWITCH
RELEASE COLUMN SWITCH
3606
HIGH BEAMS ON
FLASH COLUMN SWITCH

FIG. 36

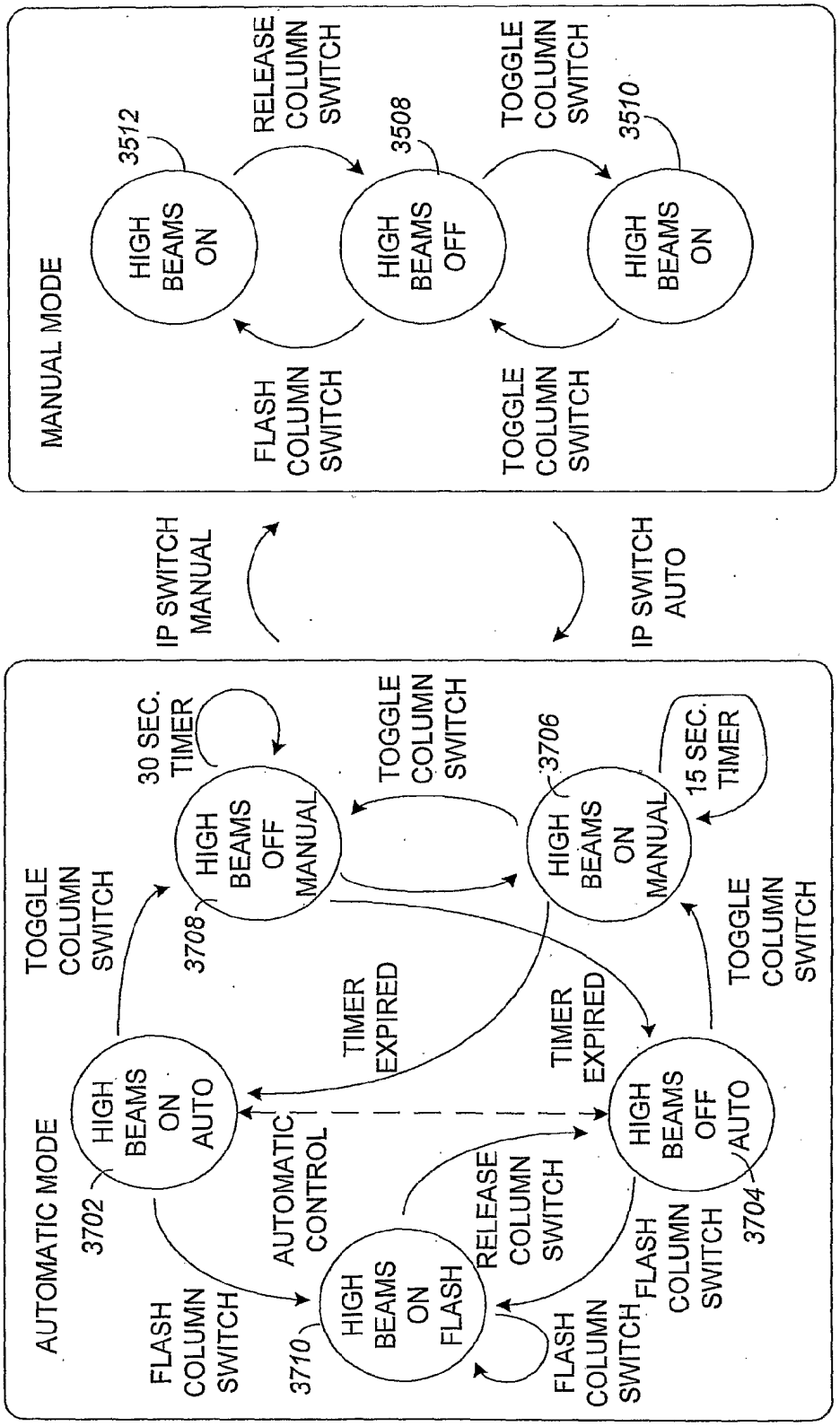
MANUAL MODE
HIGH BEAMS ON
3512
RELEASE COLUMN SWITCH
HIGH BEAMS OFF
3508
TOGGLE COLUMN SWITCH
HIGH BEAMS ON
3510
FLASH COLUMN SWITCH
TOGGLE COLUMN SWITCH
IP SWITCH MANUAL
IP SWITCH AUTO
AUTOMATIC MODE
HIGH BEAMS ON AUTO
3702
TOGGLE COLUMN SWITCH
30 SEC. TIMER
HIGH BEAMS OFF MANUAL
3708
TOGGLE COLUMN SWITCH
HIGH BEAMS ON MANUAL
3706
15 SEC. TIMER
TIMER EXPIRED
TIMER EXPIRED
TOGGLE COLUMN SWITCH
HIGH BEAMS OFF AUTO
3704
AUTOMATIC CONTROL
RELEASE COLUMN SWITCH
HIGH BEAMS ON FLASH
3710
FLASH COLUMN SWITCH
FLASH COLUMN SWITCH
FLASH COLUMN SWITCH

FIG. 37

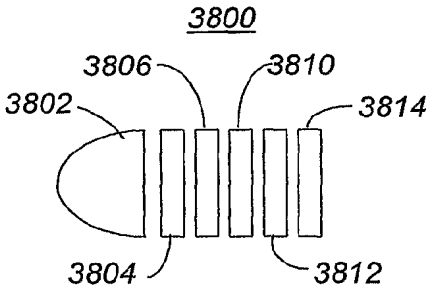

FIG. 38

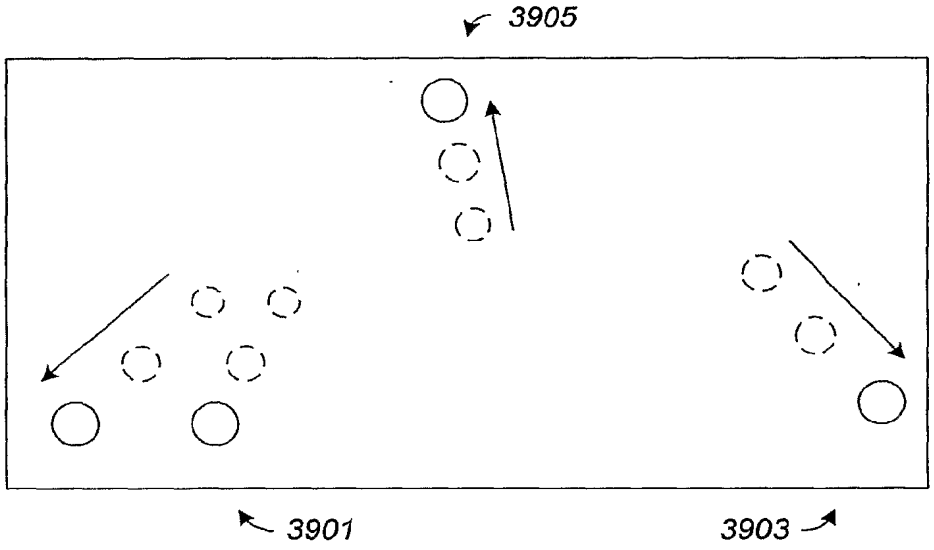

FIG. 39

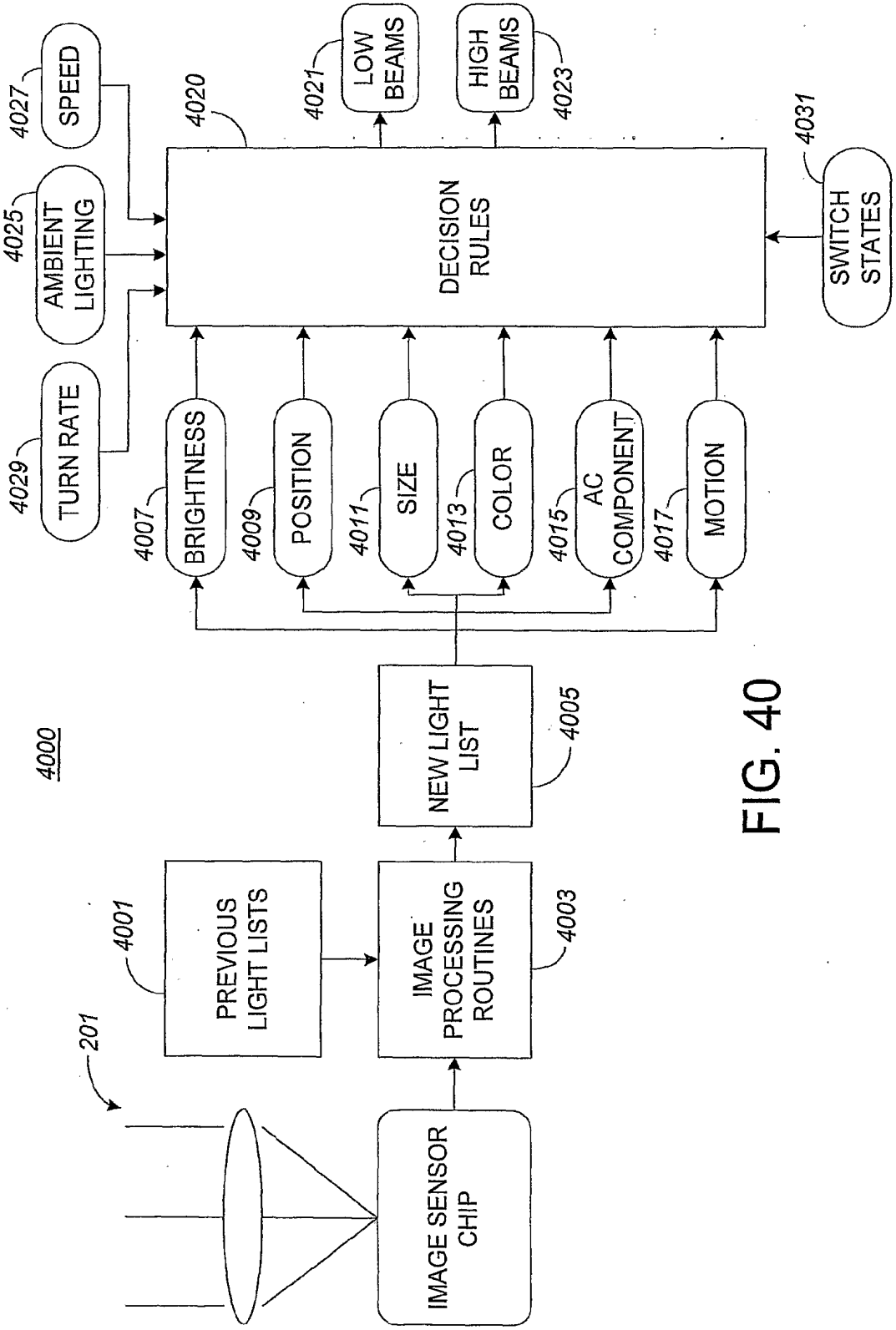
4000
201
IMAGE SENSOR CHIP
4001
PREVIOUS LIGHT LISTS
IMAGE PROCESSING ROUTINES
4003
NEW LIGHT LIST
4005
4007
BRIGHTNESS
4009
POSITION
4011
SIZE
4013
COLOR
4015
AC COMPONENT
4017
MOTION
4020
DECISION RULES
4021
LOW BEAMS
4023
HIGH BEAMS
4025
AMBIENT LIGHTING
4027
SPEED
4029
TURN RATE
4031
SWITCH STATES

FIG. 40

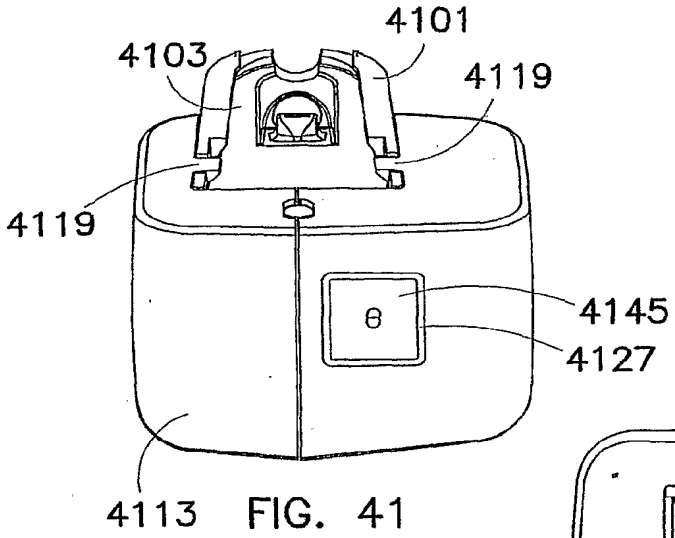

FIG. 41

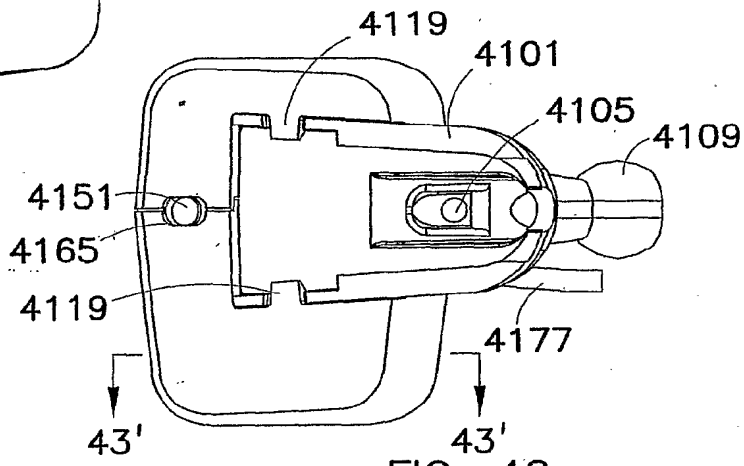

FIG. 42

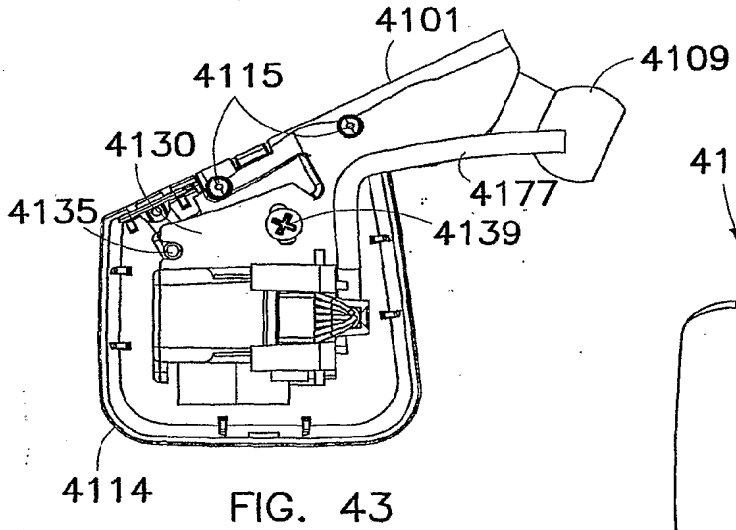

FIG. 43

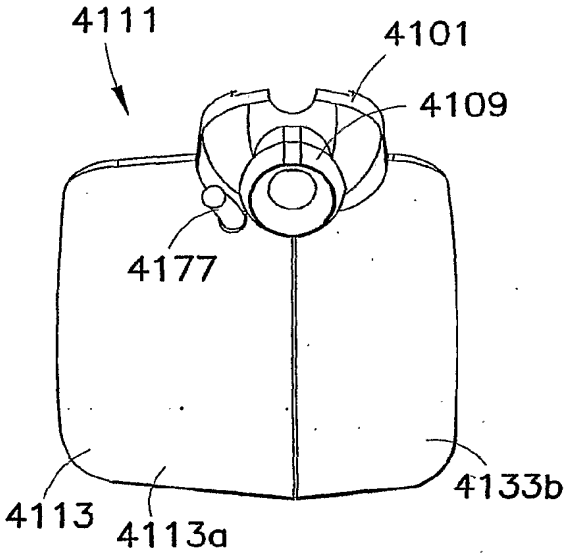

FIG. 45

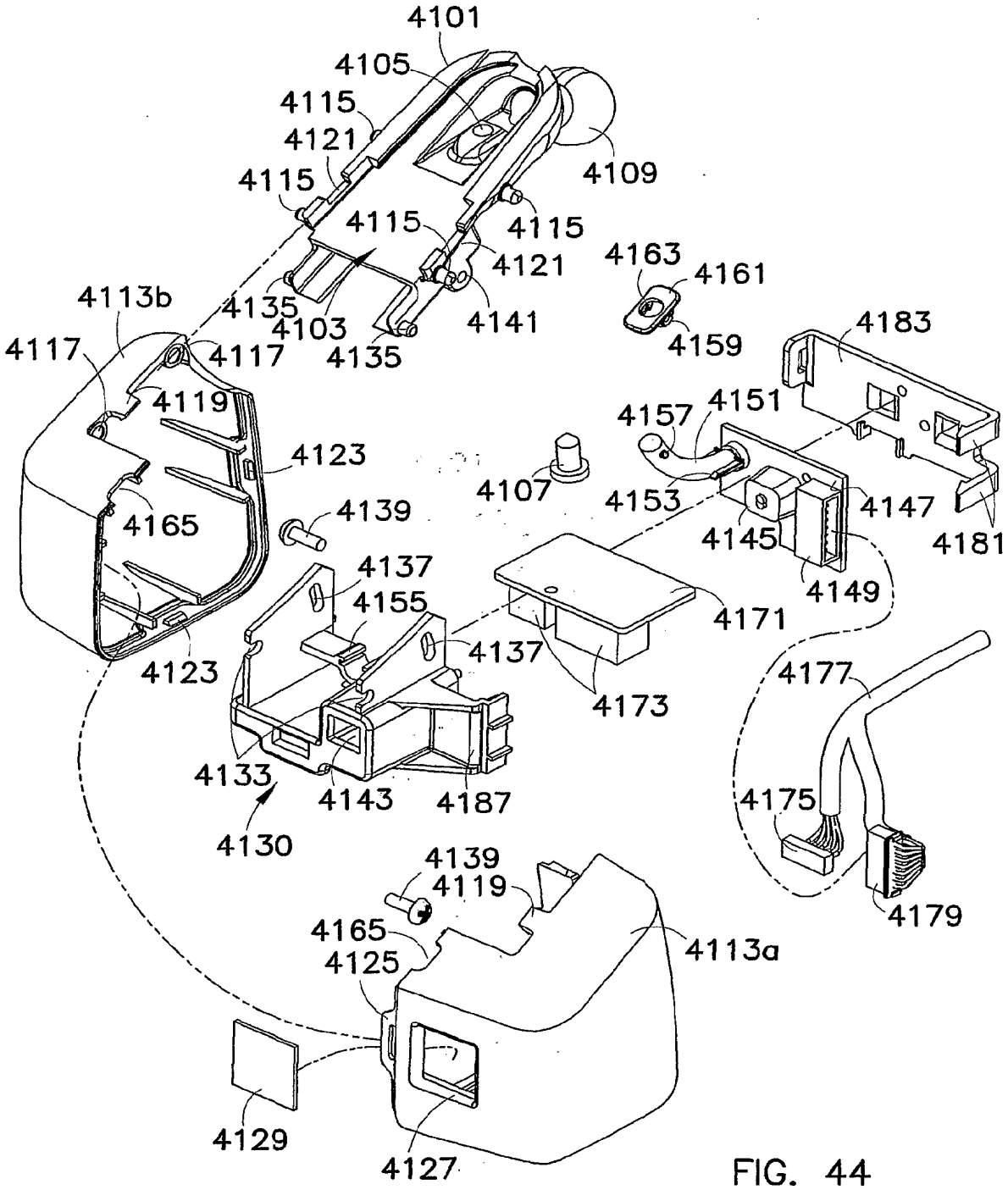
4101
4105
4115
4121
4115
4109
4115
4115
4121
4163
4161
4135
4103
4141
4159
4183
4113b
4117
4117
4135
4119
4157
4151
4123
4107
4153
4147
4139
4145
4181
4165
4149
4137
4155
4171
4137
4123
4173
4177
4133
4143
4187
4175
4130
4139
4119
4179
4165
4113a
4125
4129
4127

FIG. 44

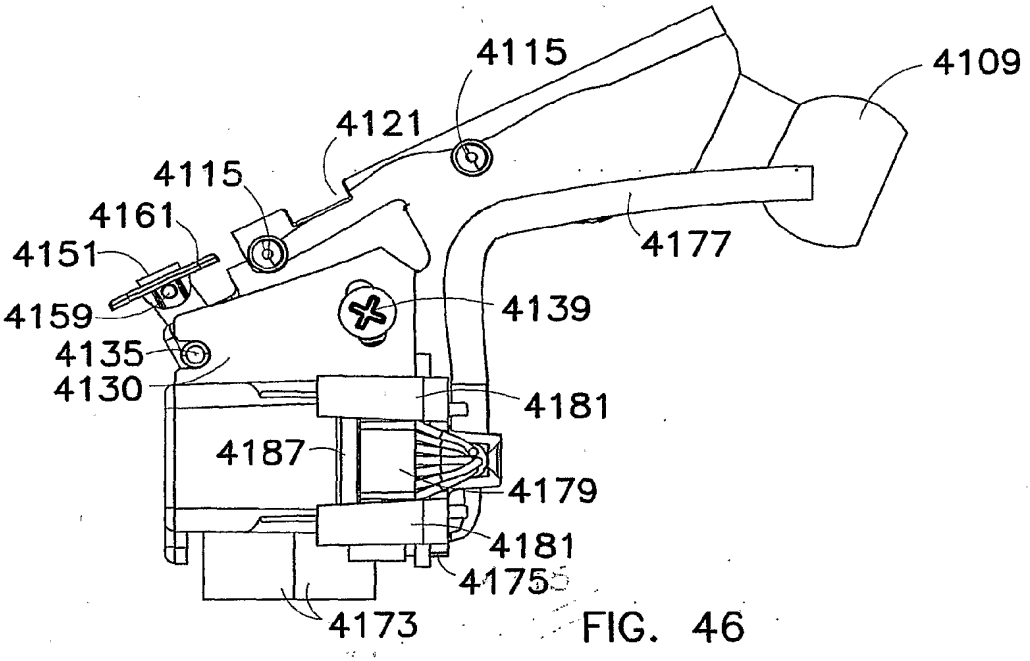
4115
4109
4121
4115
4161
4151
4177
4159
4139
4135
4130
4181
4187
4179
4181
4175
4173

FIG. 46

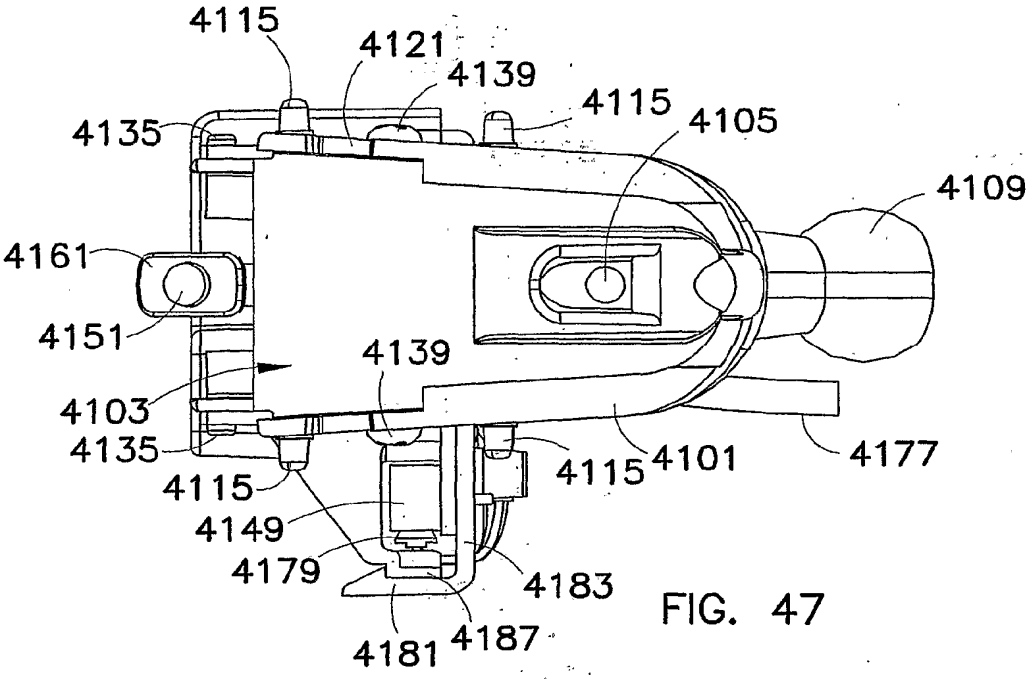
4115
4121
4139
4115
4105
4135
4109
4161
4151
4139
4103
4135
4115
4101
4177
4115
4149
4179
4183
4181
4187

FIG. 47

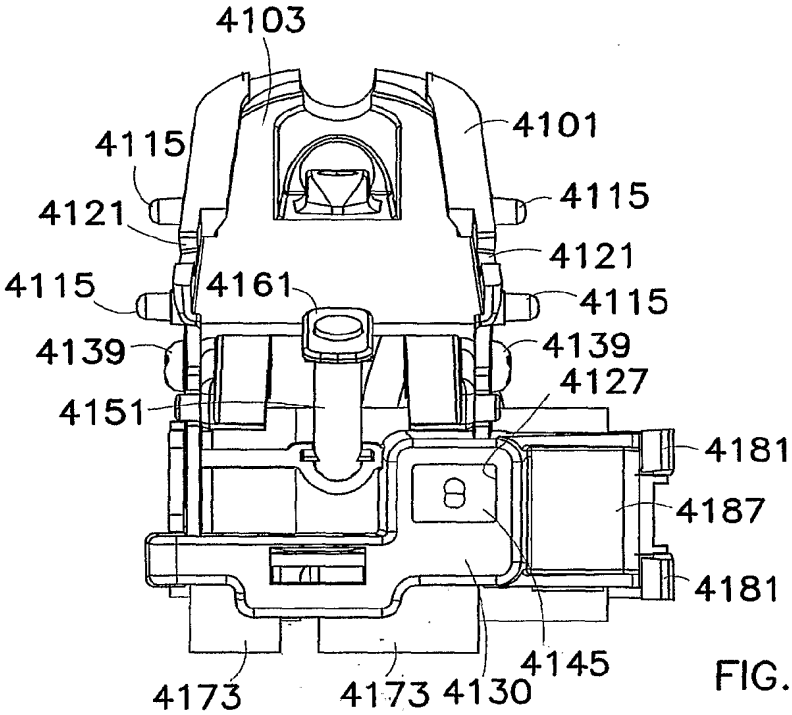
4103
4101
4115
4115
4121
4121
4115
4161
4115
4139
4139
4127
4151
4181
4187
4181
4145
4173
4173
4130

FIG. 48

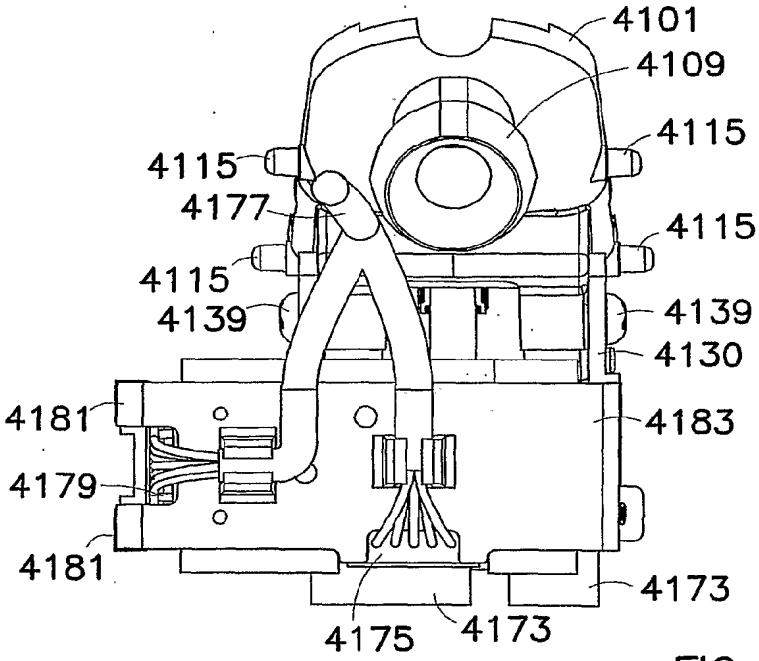
4101
4109
4115
4115
4177
4115
4115
4139
4139
4130
4181
4183
4179
4181
4173
4175
4173

FIG. 49

FIG. 50A

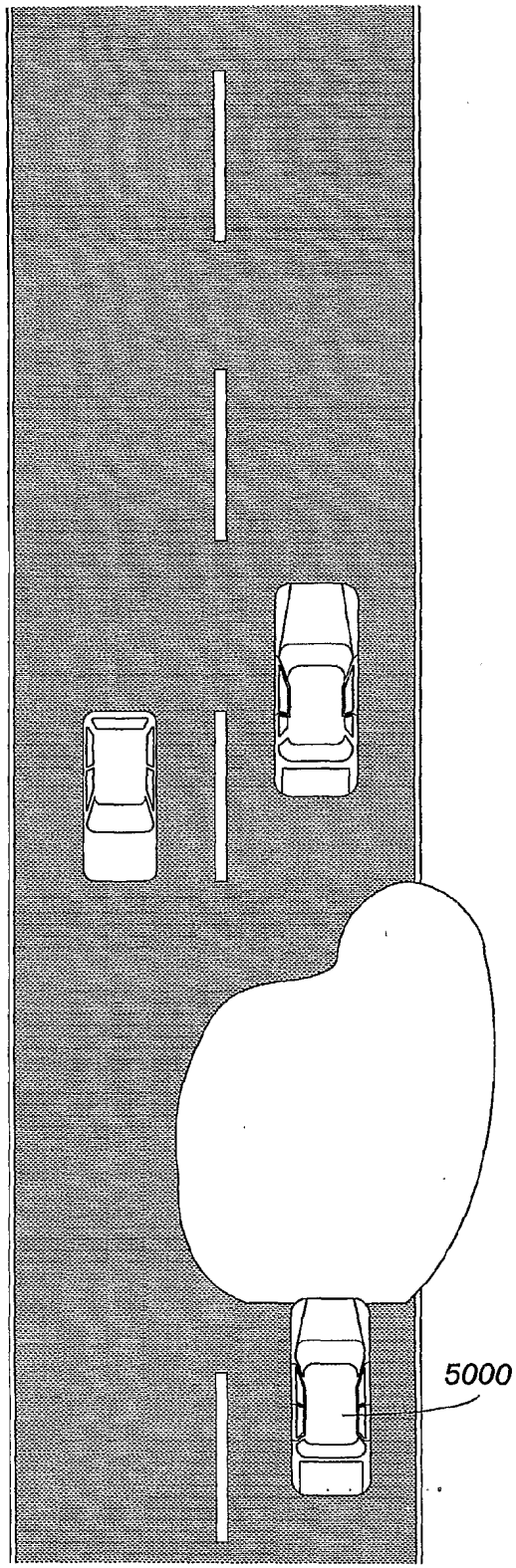

FIG. 50B

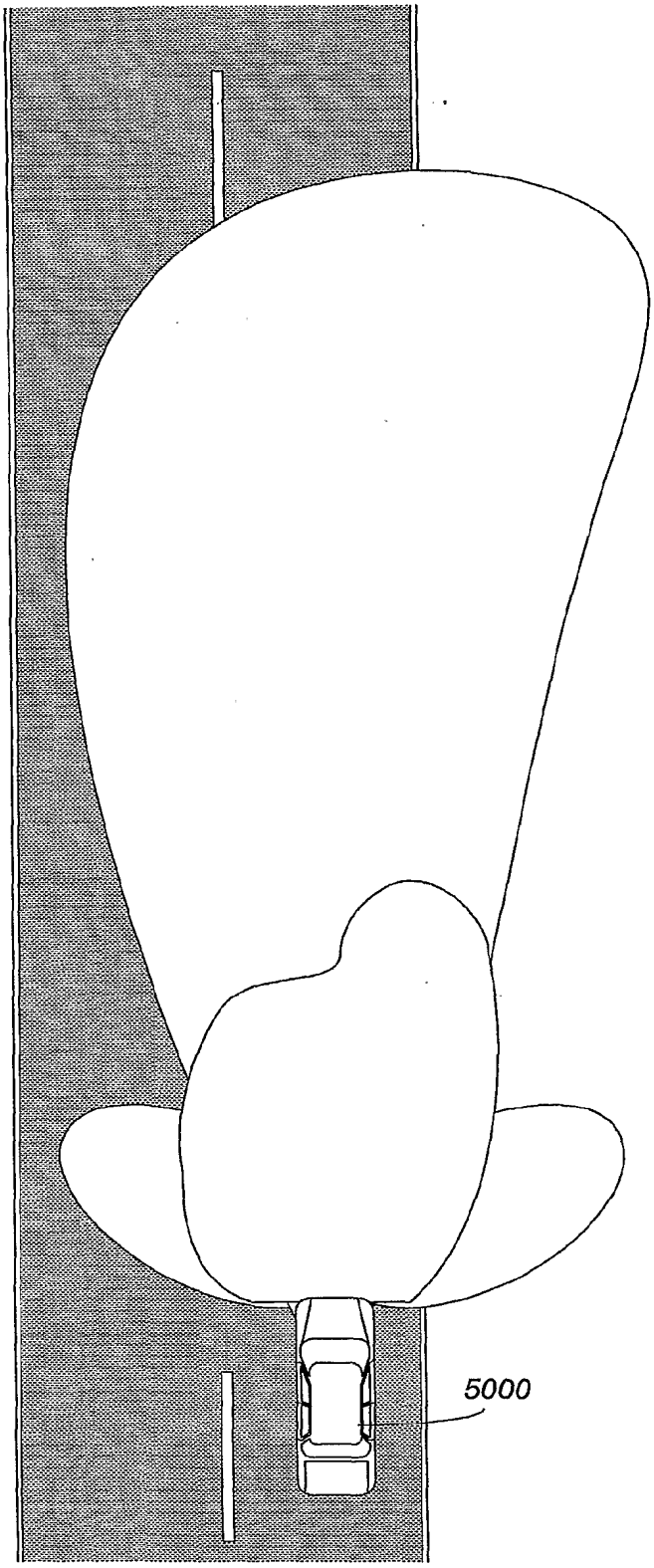

FIG. 50C

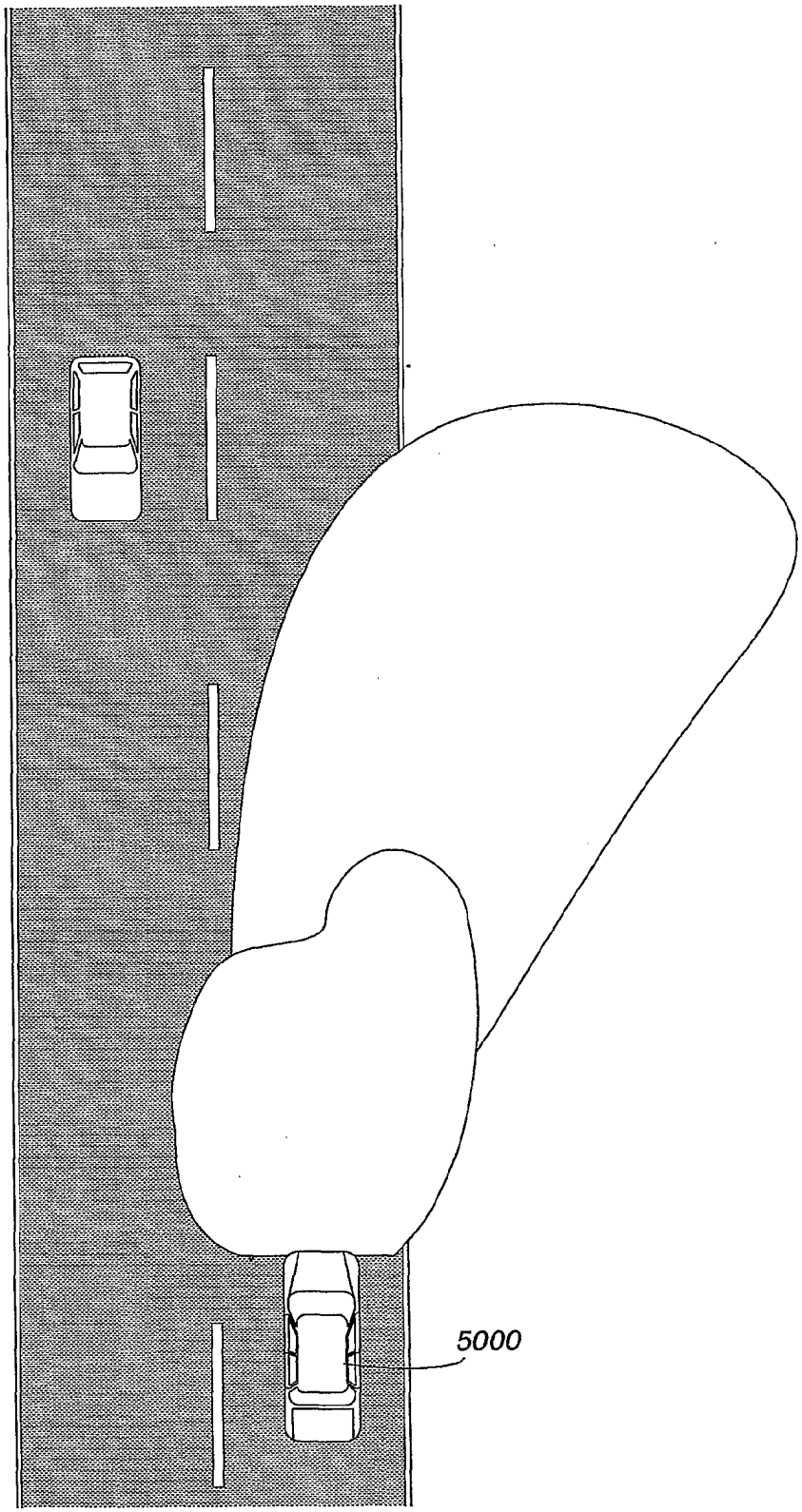

IN THE UNITED STATES PATENT AND TRADEMARK OFFICE

In re application of:

YECHEZKAL EVAN SPERO

Group Art Unit: 2644

Examiner: LE, TUNG X

Serial No.: 17/152,399

Filed: January 19, 2021

For: ADAPTIVE CONTROLLED HEADLIGHT SYSTEM

Attorney Docket No.: TRCH0103PUSP3

INFORMATION DISCLOSURE STATEMENT
UNDER 37 C.F.R. § 1.97(b)(1)

Commissioner for Patents
P.O. Box 1450
Alexandria, VA 22313-1450

Commissioner:

In compliance with the duty of disclosure under 37 C.F.R. § 1.56 and §§ 1.97-1.98, the references listed and identified on the attached Form PTO/SB/08a are being submitted herewith for consideration by the Examiner. This Statement is being filed in accordance with 37 C.F.R. § 1.97(b)(1).

While this Statement is being filed in compliance with the duty of disclosure, citation of the listed references is not to be construed as an admission that any of the references are "material" as defined under 37 C.F.R. § 1.56(b).

In accordance with 37 C.F.R. § 1.98(d), copies of the listed references are not being provided since the references were previously cited by or submitted to the Patent and Trademark Office in prior application Serial No. 15/961,861, filed April 24, 2018 patented as 10,894,503 B2, of which the present application is a continuation and in prior application Serial No. 13/357,549, filed January 24, 2012 patented as 9,955,551 B2, of which the present application is a continuation.

Respectfully submitted,

Yechezkal Evan Spero

By: /Bernard P. Tomsa/
Bernard P. Tomsa
Reg. No. 60,121
Attorney/Agent for Applicant

Date: July 8, 2021

BROOKS KUSHMAN P.C.
1000 Town Center, 22nd Floor
Southfield, MI 48075-1238
Phone: 248-358-4400
Fax: 248-358-3351

Electronic Patent Application Fee Transmittal

Application Number:	17152399
Filing Date:	19-Jan-2021
Title of Invention:	ADAPTIVE HEADLIGHT SYSTEM
First Named Inventor/Applicant Name:	Yechezkal Evan Spero
Filer:	Bernard Patrick Tomsa/Fiona Archer
Attorney Docket Number:	TRCH0103PUSP3

Filed as Large Entity

Filing Fees for Utility under 35 USC 111(a)

Description	Fee Code	Quantity	Amount	Sub-Total in USD($)
Basic Filing:				
Pages:				
Claims:				
Miscellaneous-Filing:				
Petition:				
Patent-Appeals-and-Interference:				
Post-Allowance-and-Post-Issuance:				
Extension-of-Time:				

Description	Fee Code	Quantity	Amount	Sub-Total in USD($)
Miscellaneous:				
SUBMISSION- INFORMATION DISCLOSURE STMT	1806	1	260	260
		Total in USD ($)		**260**

Electronic Acknowledgement Receipt

EFS ID:	43195146
Application Number:	17152399
International Application Number:	
Confirmation Number:	6274
Title of Invention:	ADAPTIVE HEADLIGHT SYSTEM
First Named Inventor/Applicant Name:	Yechezkal Evan Spero
Customer Number:	22045
Filer:	Bernard Patrick Tomsa/Fiona Archer
Filer Authorized By:	Bernard Patrick Tomsa
Attorney Docket Number:	TRCH0103PUSP3
Receipt Date:	08-JUL-2021
Filing Date:	19-JAN-2021
Time Stamp:	09:32:06
Application Type:	Utility under 35 USC 111(a)

Payment information:

Submitted with Payment	yes
Payment Type	DA
Payment was successfully received in RAM	$260
RAM confirmation Number	E202178032454757
Deposit Account	
Authorized User	

The Director of the USPTO is hereby authorized to charge indicated fees and credit any overpayment as follows:

File Listing:

Document Number	Document Description	File Name	File Size(Bytes)/ Message Digest	Multi Part /.zip	Pages (if appl.)
1	Information Disclosure Statement (IDS) Form (SB08)	IDS_TRCH0103PUSP3.PDF	1036237 11d10b7ed71f5ed0ad1ac1a795b7ac281c65f1e6	no	10
Warnings:					
Information:					
2	Foreign Reference	WO2001070538A2.PDF	9193310 550923dc9c77b7aac99bfb4d9987a280cd76611e	no	159
Warnings:					
Information:					
3	Transmittal Letter	IDS_transmittal_TRCH0103PUSP3.PDF	114557 6ceae6be38ef7885e953753866fd699941b1fa4e	no	2
Warnings:					
Information:					
4	Fee Worksheet (SB06)	fee-info.pdf	30780 0efaecef4cd76b8811168afc712b8bbeca356859	no	2
Warnings:					
Information:					
		Total Files Size (in bytes):	10374884		

This Acknowledgement Receipt evidences receipt on the noted date by the USPTO of the indicated documents, characterized by the applicant, and including page counts, where applicable. It serves as evidence of receipt similar to a Post Card, as described in MPEP 503.

New Applications Under 35 U.S.C. 111
If a new application is being filed and the application includes the necessary components for a filing date (see 37 CFR 1.53(b)-(d) and MPEP 506), a Filing Receipt (37 CFR 1.54) will be issued in due course and the date shown on this Acknowledgement Receipt will establish the filing date of the application.
National Stage of an International Application under 35 U.S.C. 371
If a timely submission to enter the national stage of an international application is compliant with the conditions of 35 U.S.C. 371 and other applicable requirements a Form PCT/DO/EO/903 indicating acceptance of the application as a national stage submission under 35 U.S.C. 371 will be issued in addition to the Filing Receipt, in due course.
New International Application Filed with the USPTO as a Receiving Office
If a new international application is being filed and the international application includes the necessary components for an international filing date (see PCT Article 11 and MPEP 1810), a Notification of the International Application Number and of the International Filing Date (Form PCT/RO/105) will be issued in due course, subject to prescriptions concerning national security, and the date shown on this Acknowledgement Receipt will establish the international filing date of the application.

IN THE UNITED STATES PATENT AND TRADEMARK OFFICE

In re application of:

YECHEZKAL EVAN SPERO

Group Art Unit: 2844

Examiner: LE, TUNG X.

Serial No.: 17/152,399

Filed: January 19, 2021

For: ADAPTIVE HEADLIGHT SYSTEM

Attorney Docket No.: TRCH0103PUSP3

AMENDMENT UNDER 37 C.F.R. § 1.111

Mail Stop Amendment
Commissioner for Patents
U.S. Patent and Trademark Office
P.O. Box 1450
Alexandria, VA 22313-1450

Commissioner:

In response to the Office Action mailed July 7, 2021, please amend the above-identified application as follows:

Amendments to the Claims:

This listing of claims will replace all prior versions, and listings, of claims in the application:

1. (Original) A system, for a motor vehicle, comprising:

a plurality of headlamps, each comprising a plurality of LED light sources;

one or more processors; and

a memory storing instructions that, when executed by one or more of the one or more processors, enable the one or more processors to:

receive first data, including at least map data, indicating a road curvature upcoming along a road on which the motor vehicle is traveling;

determine a light change, the change adapting a light pattern of the headlamps in at least one of color, intensity or spatial distribution to increase light in a direction of the road curvature ahead of the motor vehicle and shaping light based at least in part on the road curvature; and

control at least a first plurality of the LED light sources to provide light based at least in part on the determined light change and prior to the motor vehicle reaching the road curvature.

2. (Original) The system of claim 1, wherein the determination of the light change includes selection of the first plurality of the LED light sources.

3. (Original) The system of claim 1, wherein the instructions include instructions that, when executed by the one or more processors, enable the one or more processors to reshape light based on the road curvature as the motor vehicle travels at least to or through the road curvature.

4. (Original) The system of claim 3, wherein the reshaping of light further includes control to at least one of the first plurality of LED light sources, or a second plurality of

LED light sources, including at least one LED light source different from the LED light sources of the first plurality of LED light sources, to provide reshaped light.

5. (Original) The system of claim 1, wherein the increase of light in the direction of the road curvature includes at least an increase of light emitted at a level below high-beam light and directed in the direction of the road curvature.

6. (Original) The system of claim 1, wherein the instructions include instructions that, when executed by the one or more processors, enable the one or more processors to:

determine a second light change, the second change adapting the light pattern of the headlamps in at least one of color, intensity or spatial distribution to increase light in a direction of a second road curvature ahead of the motor vehicle, determined based on at least one of the first data or second data including at least second map data, and the second change shaping light based at least in part on the second road curvature; and

control at least a second plurality of the LED light sources, having at least one LED light source different from the first plurality of LED light sources, to provide light based at least in part on the determined second light change and prior to the motor vehicle reaching the second road curvature.

7. (Original) The system of claim 1, wherein the increase of light in the direction of the road curvature includes at least one of expansion of the light pattern in the direction of the road curvature or an increase to intensity of light directed in the direction of the road curvature; and

wherein the determination of the light change includes determination of light changes to individual LEDs of the first plurality of LED light sources, at least one of the changes including at least one of:

a variation to at least one of intensity or color of individual LEDs of the first plurality of LED light sources, or

providing light directed in the direction of the road curvature from an LED not providing light directed in the direction of the road curvature prior to the change.

8. (Original) The system of claim 1, further comprising one or more cameras positioned to capture data indicating at least one other vehicle ahead of the motor vehicle;

wherein the instructions include instructions that, when executed by the one or more processors, enable the one or more processors to:

determine a position associated with the at least one other vehicle based at least in part on second data captured by at least one of the one or more cameras; and

control, based at least in part on the position, a second plurality of LED light sources providing light directed towards an area including at least a portion of the other vehicle to diminish glare to a driver of the other vehicle by a decrease to intensity of light directed towards and illuminating the area, the light that is directed towards and illuminating the area having lower intensity compared to light directed towards points laterally adjacent the area to either side.

9. (Original) The system of claim 8, wherein:

the first plurality and second plurality of LED light sources include at least one common LED light source;

the control of the second plurality of LED light sources is based at least in part on third data received from a non-camera sensor of the motor vehicle;

the position includes at least one of:

a distance associated with the at least one other vehicle,

at least one elevation associated with the at least one other vehicle, or

a position within image data captured by at least one of the cameras;

the first data includes data from a non-camera sensor of the motor vehicle;

either one of the control of the first plurality of LED light sources or control of the second plurality of LED light sources is subsequent to and accommodative of the other;

the control of the second plurality of LED light sources additionally includes termination of light from at least one LED providing light directed to the area prior to the termination; and

the light pattern includes at least one of an illumination pattern or an emission pattern of the headlamps.

10. (Original) The system of claim 1, further including one or more optical control elements for controlling light from one or more of the LED light sources.

11. (Original) The system of claim 10, wherein the optical control elements include at least one of one or more reflectors, refractors or lenses.

12. (Original) A non-transitory computer-readable storage medium, storing instructions that, when executed by one or more processors of a motor vehicle that includes a plurality of headlamps that each comprise a plurality of LED light sources, enable the one or more processors to:

receive first data, including at least map data, indicating a road curvature upcoming along a road on which the motor vehicle is traveling;

determine a light change, the change adapting a light pattern of the headlamps in at least one of color, intensity or spatial distribution to increase light in a direction of the road curvature ahead of the motor vehicle and shaping light based at least in part on the road curvature; and

control at least a first plurality of the LED light sources to provide light based at least in part on the determined light change and prior to the motor vehicle reaching the road curvature.

13. (Original) The storage medium of claim 12, wherein the determination of the light change includes selection of the first plurality of the LED light sources.

14. (Original) The storage medium of claim 12, wherein the instructions include instructions that, when executed by the one or more processors, enable the one or more processors to reshape light based on the road curvature as the motor vehicle travels at least to or through the road curvature.

15. (Original) The storage medium of claim 14, wherein the reshaping of light further includes control to at least one of the first plurality of LED light sources, or a second

plurality of LED light sources, including at least one LED light source different from the LED light sources of the first plurality of LED light sources, to provide reshaped light.

16. (Original) The storage medium of claim 12, wherein the increase of light in the direction of the road curvature includes at least an increase of light emitted at a level below high-beam light and directed in the direction of the road curvature.

17. (Original) The storage medium of claim 12, wherein the instructions include instructions that, when executed by the one or more processors, enable the one or more processors to:

determine a second light change, the second change adapting the light pattern of the headlamps in at least one of color, intensity or spatial distribution to increase light in a direction of a second road curvature ahead of the motor vehicle, determined based on at least one of the first data or second data including at least second map data, and the second change shaping light based at least in part on the second road curvature; and

control at least a second plurality of the LED light sources, having at least one LED light source different from the first plurality of LED light sources, to provide light based at least in part on the determined second light change and prior to the motor vehicle reaching the second road curvature.

18. (Original) The storage medium of claim 12, wherein the increase of light in the direction of the road curvature includes at least one of expansion of the light pattern in the direction of the road curvature or an increase to intensity of light directed in the direction of the road curvature; and

wherein the determination of the light change includes determination of light changes to individual LEDs of the first plurality of LED light sources, at least one of the changes including at least one of:

a variation to at least one of intensity or color of individual LEDs of the first plurality, or

providing light directed in the direction of the road curvature from an LED not providing light directed in the direction of the road curvature prior to the change.

19. (Original) The storage medium of claim 12, wherein the instructions include instructions that, when executed by the one or more processors, enable the one or more processors to:

determine a position associated with at least one other vehicle based at least in part on second data indicating the at least one other vehicle and captured by at least one camera of the motor vehicle; and

control, based at least in part on the position, a second plurality of LED light sources providing light directed towards an area including at least a portion of the other vehicle to diminish glare to a driver of the other vehicle by a decrease to intensity of light directed towards and illuminating the area, the light that is directed towards and illuminating the area having lower intensity compared to light directed towards points laterally adjacent the area to either side.

20. (Original) The storage medium of claim 19, wherein:

the first plurality and second plurality of LED light sources include at least one common LED light source;

the control of the second plurality of LED light source is based at least in part on third data received from a non-camera sensor of the motor vehicle;

the position includes at least one of:

a distance associated with the at least one other vehicle,

at least one elevation associated with the at least one other vehicle, or

a position within image data captured by at least one of the cameras;

the first data includes data from a non-camera sensor of the motor vehicle;

either one of the control of the first plurality of LED light sources or control of the second plurality of LED light sources is subsequent to and accommodative of the other;

the control of the second plurality of LED light sources additionally includes termination of light from at least one LED providing light directed to the area prior to the termination; and

the light pattern includes at least one of an illumination pattern or an emission pattern of the headlamps.

21. (Original) The storage medium of claim 19, wherein the instructions include instructions that, when executed by the one or more processors, enable the one or more processors to utilize one or more optical control elements included in the motor vehicle to control light from at least the first plurality or second plurality of the LED light sources.

22. (Original) The storage medium of claim 21, wherein the optical control elements include at least one of one or more reflectors, refractors or lenses.

23. (Original) A computer-implemented method for adapting light from headlamps of a motor vehicle to accommodate road shape changes, the headlamps including a plurality of LED light sources, comprising:

determining an upcoming shape change of a road, ahead of the motor vehicle, based on first data, including map data, indicating the shape change;

determining a light output, the output adapting a light pattern of the headlamps in at least one of color, intensity or spatial distribution to increase light in a direction associated with the shape change ahead of the motor vehicle and shaping light based on the shape change; and

prior to reaching the road shape change, causing at least a first plurality of the LED light sources to provide light based at least in part on the determined light output.

24. (Original) The method of claim 23, wherein the determining the light includes selecting the first plurality of the LED light sources.

25. (Original) The method of claim 23, further comprising reshaping light based on the shape change as the motor vehicle travels at least to or through the shape change.

26. (Original) The method of claim 25, wherein the reshaping light further includes controlling at least one of the first plurality of LED light sources, or a second plurality of LED light sources, including at least one LED light source different from the LED light sources of the first plurality of LED light sources, to provide reshaped light.

27. (Original) The method of claim 23, wherein the increase of light in the direction associated with the shape change includes at least light output that increases light emitted at a level below high-beam light and directed in the direction associated with shape change.

28. (Original) The method of claim 23, further comprising:

determining a second light output, the second output adapting the light pattern of the headlamps in at least one of color, intensity or spatial distribution to increase light in a direction associated with a second shape change ahead of the motor vehicle, determined based on at least one of the first data or second data including at least second map data, and the second output shaping light based at least in part on the second shape change; and

controlling at least a second plurality of the LED light sources, having at least one LED light source different from the first plurality of LED light sources, to provide light based at least in part on the determined second output and prior to the motor vehicle reaching the second shape change.

29. (Original) The method of claim 23, wherein the increase of light in the direction associated with the shape change includes at least one of expansion of the light pattern in the direction associated with the shape change or an increase to intensity of light directed in the direction associated with the shape change; and

wherein the determining the light output includes determining output for individual LEDs of the first plurality of LED light sources, the output including providing light directed in the direction associated with the shape change from an LED not providing light directed in the direction associated with the shape change prior to the change.

30. (Original) The method of claim 23, further comprising:

determining a position associated with at least one other vehicle based at least in part on second data indicating the at least one other vehicle and captured by at least one camera of the motor vehicle; and

controlling, based at least in part on the position, a second plurality of LED light sources providing light directed towards an area including at least a portion of the other vehicle to diminish glare to a driver of the other vehicle by decreasing intensity of light directed towards and illuminating the area, the light directed towards and illuminating the area having lower intensity compared to light directed towards points laterally adjacent the area to either side.

31. (Original) The method of claim 30, wherein:

the first plurality and second plurality of LED light sources include at least one common LED light source;

the controlling the second plurality of LED light sources is based at least in part on third data received from a non-camera sensor of the motor vehicle;

the position includes at least one of:

a distance associated with the at least one other vehicle,

at least one elevation associated with the at least one other vehicle, or

a position within image data captured by at least one of the cameras;

the first data includes data from a non-camera sensor of the motor vehicle;

either one of the determining the light output or controlling the second plurality of LED light sources is subsequent to and accommodative of the other;

the controlling the second plurality of LED light sources additionally includes terminating light from at least one LED providing light directed to the area prior to the terminating; and

the light pattern includes at least one of an illumination pattern or an emission pattern of the headlamps.

32. (Original) The method of claim 30, further comprising utilizing one or more optical control elements included in the motor vehicle to control light from at least the first plurality or second plurality of the LED light sources.

33. (Original) The method of claim 32, wherein the optical control elements include at least one of one or more reflectors, refractors or lenses.

Remarks

For at least the reasons presented, all claims are believed to be in condition for allowance. Favorable reconsideration and allowance are respectfully requested.

Applicant spoke with the Examiner briefly on 7/13/21, to discuss the priority date of the prior art relative to the priority date of the claims. No agreement was reached, and Applicant thus responds to the action below. Applicant thanks the Examiner for the call.

Claims 1-5, 12-16 and 23-27 stand rejected under pre-AIA 35 U.S.C. § 103(a) as being unpatentable over U.S. Publication No. 2010/0286896 issued to Yamada (hereinafter "*Yamada*") in view of U.S. Publication No. 2012/0001547 issued to Nishitani et al. (hereinafter "*Nishitani*").

Applicant's support for claims 1-5, 12-16 and 23-27 was drawn from the original specification, U.S. Ser. No. 10/604,360, filed on July 14, 2003. See, e.g., the description of Figs. 14 and 15, such as, but not limited to:

1) [0211] in the present application and in the same form at [0179] in US 10/604,360
2) [0212] in the present application and in the same form at [0180] in US 10/604,360
3) [0215] in the present application and in the same form at [0183] in US 10/604,360
4) [0216] in the present application and in the same form at [0184] in US 10/604,360
5) [0221] in the present application and in the same form at [0189] in US 10/604,360
6) [0222] in the present application and in the same form at [0190] in US 10/604,360

As U.S. Ser. No. 10/604,360, has a filing date of July 14, 2003, and claims priority to a provisional application filed July 12, 2002, the claims are entitled to at least the 2003 priority date. Yamada was filed 9/12/06 and claims priority to a Japanese application filed on 10/12/05, and Nishitani was filed on 6/29/11 and claims priority to a Japanese application filed on 6/30/10. None of these dates precede the US priority date applicable to these particular instant claims, and withdrawal of the rejection is respectfully requested.

Please charge any fees or credit any overpayments as a result of the filing of this paper to our Deposit Account No. 02-3978.

Respectfully submitted,

YECHEZKAL EVAN SPERO

By: /Bernard P. Tomsa/
Bernard P. Tomsa
Reg. No. 60,121
Attorney/Agent for Applicant

Date: July 14, 2021

BROOKS KUSHMAN P.C.
1000 Town Center, 22nd Floor
Southfield, MI 48075-1238
Phone: 248-358-4400
Fax: 248-358-3351
\

Electronic Acknowledgement Receipt

EFS ID:	43244588
Application Number:	17152399
International Application Number:	
Confirmation Number:	6274
Title of Invention:	ADAPTIVE HEADLIGHT SYSTEM
First Named Inventor/Applicant Name:	Yechezkal Evan Spero
Customer Number:	22045
Filer:	Bernard Patrick Tomsa/Julie Oumedian
Filer Authorized By:	Bernard Patrick Tomsa
Attorney Docket Number:	TRCH0103PUSP3
Receipt Date:	14-JUL-2021
Filing Date:	19-JAN-2021
Time Stamp:	15:07:15
Application Type:	Utility under 35 USC 111(a)

Payment information:

Submitted with Payment	no

File Listing:

Document Number	Document Description	File Name	File Size(Bytes)/ Message Digest	Multi Part /.zip	Pages (if appl.)
1		TRCH0103PUSP3_Amendment.PDF	9613610 31604d2e30a3254874d0643d202401d48ab9a22e	yes	12

	Multipart Description/PDF files in .zip description		
	Document Description	**Start**	**End**
	Amendment/Req. Reconsideration-After Non-Final Reject	1	1
	Claims	2	10
	Applicant Arguments/Remarks Made in an Amendment	11	12

Warnings:	
Information:	
Total Files Size (in bytes):	9613610

This Acknowledgement Receipt evidences receipt on the noted date by the USPTO of the indicated documents, characterized by the applicant, and including page counts, where applicable. It serves as evidence of receipt similar to a Post Card, as described in MPEP 503.

New Applications Under 35 U.S.C. 111
If a new application is being filed and the application includes the necessary components for a filing date (see 37 CFR 1.53(b)-(d) and MPEP 506), a Filing Receipt (37 CFR 1.54) will be issued in due course and the date shown on this Acknowledgement Receipt will establish the filing date of the application.
National Stage of an International Application under 35 U.S.C. 371
If a timely submission to enter the national stage of an international application is compliant with the conditions of 35 U.S.C. 371 and other applicable requirements a Form PCT/DO/EO/903 indicating acceptance of the application as a national stage submission under 35 U.S.C. 371 will be issued in addition to the Filing Receipt, in due course.
New International Application Filed with the USPTO as a Receiving Office
If a new international application is being filed and the international application includes the necessary components for an international filing date (see PCT Article 11 and MPEP 1810), a Notification of the International Application Number and of the International Filing Date (Form PCT/RO/105) will be issued in due course, subject to prescriptions concerning national security, and the date shown on this Acknowledgement Receipt will establish the international filing date of the application.

PTO/SB/06 (09-11)
Approved for use through 1/31/2014. OMB 0651-0032
U.S. Patent and Trademark Office; U.S. DEPARTMENT OF COMMERCE
Under the Paperwork Reduction Act of 1995, no persons are required to respond to a collection of information unless it displays a valid OMB control number.

PATENT APPLICATION FEE DETERMINATION RECORD Substitute for Form PTO-875	Application or Docket Number 17/152,399	Filing Date 01/19/2021	☐ To be Mailed

ENTITY: ☑ LARGE ☐ SMALL ☐ MICRO

APPLICATION AS FILED - PART I

FOR	(Column 1) NUMBER FILED	(Column 2) NUMBER EXTRA		RATE ($)	FEE ($)
☐ BASIC FEE (37 CFR 1.16(a), (b), or (c))	N/A	N/A		N/A	
☐ SEARCH FEE (37 CFR 1.16(k), (i), or (m))	N/A	N/A		N/A	
☐ EXAMINATION FEE (37 CFR 1.16(o), (p), or (q))	N/A	N/A		N/A	
TOTAL CLAIMS (37 CFR 1.16(i))	minus 20 =	*		x $100 =	
INDEPENDENT CLAIMS (37 CFR 1.16(h))	minus 3 =	*		x $480 =	
☐ APPLICATION SIZE FEE (37 CFR 1.16(s))	If the specification and drawings exceed 100 sheets of paper, the application size fee due is $310 ($155 for small entity) for each additional 50 sheets or fraction thereof. See 35 U.S.C. 41(a)(1)(G) and 37 CFR 1.16(s).				
☐ MULTIPLE DEPENDENT CLAIM PRESENT (37 CFR 1.16(j))					
* If the difference in column 1 is less than zero, enter "0" in column 2.				TOTAL	

APPLICATION AS AMENDED - PART II

AMENDMENT	07/14/2021	(Column 1) CLAIMS REMAINING AFTER AMENDMENT		(Column 2) HIGHEST NUMBER PREVIOUSLY PAID FOR	(Column 3) PRESENT EXTRA		RATE ($)	ADDITIONAL FEE ($)
	Total (37 CFR 1.16(i))	* 33	Minus	** 33	= 0		x $100 =	0
	Independent (37 CFR 1.16(h))	* 3	Minus	*** 3	= 0		x $480 =	0
	☐ Application Size Fee (37 CFR 1.16(s))							
	☐ FIRST PRESENTATION OF MULTIPLE DEPENDENT CLAIM (37 CFR 1.16(j))							
							TOTAL ADD'L FEE	0

AMENDMENT		(Column 1) CLAIMS REMAINING AFTER AMENDMENT		(Column 2) HIGHEST NUMBER PREVIOUSLY PAID FOR	(Column 3) PRESENT EXTRA		RATE ($)	ADDITIONAL FEE ($)
	Total (37 CFR 1.16(i))	*	Minus	**	=		x $0 =	
	Independent (37 CFR 1.16(h))	*	Minus	***	=		x $0 =	
	☐ Application Size Fee (37 CFR 1.16(s))							
	☐ FIRST PRESENTATION OF MULTIPLE DEPENDENT CLAIM (37 CFR 1.16(j))							
							TOTAL ADD'L FEE	

* If the entry in column 1 is less than the entry in column 2, write "0" in column 3.	LIE
** If the "Highest Number Previously Paid For" IN THIS SPACE is less than 20, enter "20".	/ANTJUAN M RIVERA/
*** If the "Highest Number Previously Paid For" IN THIS SPACE is less than 3, enter "3".	
The "Highest Number Previously Paid For" (Total or Independent) is the highest number found in the appropriate box in column 1.	

This collection of information is required by 37 CFR 1.16. The information is required to obtain or retain a benefit by the public which is to file (and by the USPTO to process) an application. Confidentiality is governed by 35 U.S.C. 122 and 37 CFR 1.14. This collection is estimated to take 12 minutes to complete, including gathering, preparing, and submitting the completed application form to the USPTO. Time will vary depending upon the individual case. Any comments on the amount of time you require to complete this form and/or suggestions for reducing this burden, should be sent to the Chief Information Officer, U.S. Patent and Trademark Office, U.S. Department of Commerce, P.O. Box 1450, Alexandria, VA 22313-1450. DO NOT SEND FEES OR COMPLETED FORMS TO THIS ADDRESS. **SEND TO: Commissioner for Patents, P.O. Box 1450, Alexandria, VA 22313-1450.**

If you need assistance in completing the form, call 1-800-PTO-9199 and select option 2.

UNITED STATES PATENT AND TRADEMARK OFFICE

UNITED STATES DEPARTMENT OF COMMERCE
United States Patent and Trademark Office
Address: COMMISSIONER FOR PATENTS
P.O. Box 1450
Alexandria, Virginia 22313-1450
www.uspto.gov

NOTICE OF ALLOWANCE AND FEE(S) DUE

22045 7590 11/08/2021
Brooks Kushman
1000 Town Center
22nd Floor
Southfield, MI 48075

EXAMINER
LE, TUNG X

ART UNIT	PAPER NUMBER
2844	

DATE MAILED: 11/08/2021

APPLICATION NO.	FILING DATE	FIRST NAMED INVENTOR	ATTORNEY DOCKET NO.	CONFIRMATION NO.
17/152,399	01/19/2021	Yechezkal Evan Spero	TRCH0103PUSP3	6274

TITLE OF INVENTION: ADAPTIVE HEADLIGHT SYSTEM

APPLN. TYPE	ENTITY STATUS	ISSUE FEE DUE	PUBLICATION FEE DUE	PREV. PAID ISSUE FEE	TOTAL FEE(S) DUE	DATE DUE
nonprovisional	UNDISCOUNTED	$1200	$0.00	$0.00	$1200	02/08/2022

THE APPLICATION IDENTIFIED ABOVE HAS BEEN EXAMINED AND IS ALLOWED FOR ISSUANCE AS A PATENT. PROSECUTION ON THE MERITS IS CLOSED. THIS NOTICE OF ALLOWANCE IS NOT A GRANT OF PATENT RIGHTS. THIS APPLICATION IS SUBJECT TO WITHDRAWAL FROM ISSUE AT THE INITIATIVE OF THE OFFICE OR UPON PETITION BY THE APPLICANT. SEE 37 CFR 1.313 AND MPEP 1308.

THE ISSUE FEE AND PUBLICATION FEE (IF REQUIRED) MUST BE PAID WITHIN THREE MONTHS FROM THE MAILING DATE OF THIS NOTICE OR THIS APPLICATION SHALL BE REGARDED AS ABANDONED. THIS STATUTORY PERIOD CANNOT BE EXTENDED. SEE 35 U.S.C. 151. THE ISSUE FEE DUE INDICATED ABOVE DOES NOT REFLECT A CREDIT FOR ANY PREVIOUSLY PAID ISSUE FEE IN THIS APPLICATION. IF AN ISSUE FEE HAS PREVIOUSLY BEEN PAID IN THIS APPLICATION (AS SHOWN ABOVE), THE RETURN OF PART B OF THIS FORM WILL BE CONSIDERED A REQUEST TO REAPPLY THE PREVIOUSLY PAID ISSUE FEE TOWARD THE ISSUE FEE NOW DUE.

HOW TO REPLY TO THIS NOTICE:

I. Review the ENTITY STATUS shown above. If the ENTITY STATUS is shown as SMALL or MICRO, verify whether entitlement to that entity status still applies.

If the ENTITY STATUS is the same as shown above, pay the TOTAL FEE(S) DUE shown above.

If the ENTITY STATUS is changed from that shown above, on PART B - FEE(S) TRANSMITTAL, complete section number 5 titled "Change in Entity Status (from status indicated above)".

For purposes of this notice, small entity fees are 1/2 the amount of undiscounted fees, and micro entity fees are 1/2 the amount of small entity fees.

II. PART B - FEE(S) TRANSMITTAL, or its equivalent, must be completed and returned to the United States Patent and Trademark Office (USPTO) with your ISSUE FEE and PUBLICATION FEE (if required). If you are charging the fee(s) to your deposit account, section "4b" of Part B - Fee(s) Transmittal should be completed and an extra copy of the form should be submitted. If an equivalent of Part B is filed, a request to reapply a previously paid issue fee must be clearly made, and delays in processing may occur due to the difficulty in recognizing the paper as an equivalent of Part B.

III. All communications regarding this application must give the application number. Please direct all communications prior to issuance to Mail Stop ISSUE FEE unless advised to the contrary.

IMPORTANT REMINDER: Maintenance fees are due in utility patents issuing on applications filed on or after Dec. 12, 1980. It is patentee's responsibility to ensure timely payment of maintenance fees when due. More information is available at www.uspto.gov/PatentMaintenanceFees.

PART B - FEE(S) TRANSMITTAL

Complete and send this form, together with applicable fee(s), by mail or fax, or via EFS-Web.

By mail, send to: Mail Stop ISSUE FEE
Commissioner for Patents
P.O. Box 1450
Alexandria, Virginia 22313-1450

By fax, send to: (571)-273-2885

INSTRUCTIONS: This form should be used for transmitting the ISSUE FEE and PUBLICATION FEE (if required). Blocks 1 through 5 should be completed where appropriate. All further correspondence including the Patent, advance orders and notification of maintenance fees will be mailed to the current correspondence address as indicated unless corrected below or directed otherwise in Block 1, by (a) specifying a new correspondence address; and/or (b) indicating a separate "FEE ADDRESS" for maintenance fee notifications.

CURRENT CORRESPONDENCE ADDRESS (Note: Use Block 1 for any change of address)

22045 7590 11/08/2021

Brooks Kushman
1000 Town Center
22nd Floor
Southfield, MI 48075

Note: A certificate of mailing can only be used for domestic mailings of the Fee(s) Transmittal. This certificate cannot be used for any other accompanying papers. Each additional paper, such as an assignment or formal drawing, must have its own certificate of mailing or transmission.

Certificate of Mailing or Transmission

I hereby certify that this Fee(s) Transmittal is being deposited with the United States Postal Service with sufficient postage for first class mail in an envelope addressed to the Mail Stop ISSUE FEE address above, or being transmitted to the USPTO via EFS-Web or by facsimile to (571) 273-2885, on the date below.

(Typed or printed name)

(Signature)

(Date)

APPLICATION NO.	FILING DATE	FIRST NAMED INVENTOR	ATTORNEY DOCKET NO.	CONFIRMATION NO.
17/152,399	01/19/2021	Yechezkal Evan Spero	TRCH0103PUSP3	6274

TITLE OF INVENTION: ADAPTIVE HEADLIGHT SYSTEM

APPLN. TYPE	ENTITY STATUS	ISSUE FEE DUE	PUBLICATION FEE DUE	PREV. PAID ISSUE FEE	TOTAL FEE(S) DUE	DATE DUE
nonprovisional	UNDISCOUNTED	$1200	$0.00	$0.00	$1200	02/08/2022

EXAMINER	ART UNIT	CLASS-SUBCLASS
LE, TUNG X	2844	315-152000

1. Change of correspondence address or indication of "Fee Address" (37 CFR 1.363).

❑ Change of correspondence address (or Change of Correspondence Address form PTO/SB/122) attached.

❑ "Fee Address" indication (or "Fee Address" Indication form PTO/SB/47; Rev 03-09 or more recent) attached. **Use of a Customer Number is required.**

2. For printing on the patent front page, list
(1) The names of up to 3 registered patent attorneys or agents OR, alternatively,
(2) The name of a single firm (having as a member a registered attorney or agent) and the names of up to 2 registered patent attorneys or agents. If no name is listed, no name will be printed.

1_____

2_____

3_____

3. ASSIGNEE NAME AND RESIDENCE DATA TO BE PRINTED ON THE PATENT (print or type)

PLEASE NOTE: Unless an assignee is identified below, no assignee data will appear on the patent. If an assignee is identified below, the document must have been previously recorded, or filed for recordation, as set forth in 37 CFR 3.11 and 37 CFR 3.81(a). Completion of this form is NOT a substitute for filing an assignment.

(A) NAME OF ASSIGNEE (B) RESIDENCE: (CITY and STATE OR COUNTRY)

Please check the appropriate assignee category or categories (will not be printed on the patent) : ❑ Individual ❑ Corporation or other private group entity ❑ Government

4a. Fees submitted: ❑Issue Fee ❑Publication Fee (if required) ❑Advance Order - # of Copies _____

4b. Method of Payment: *(Please first reapply any previously paid fee shown above)*

❑ Electronic Payment via EFS-Web ❑ Enclosed check ❑ Non-electronic payment by credit card (Attach form PTO-2038)

❑ The Director is hereby authorized to charge the required fee(s), any deficiency, or credit any overpayment to Deposit Account No. _____

5. **Change in Entity Status** (from status indicated above)

❑ Applicant certifying micro entity status. See 37 CFR 1.29

❑ Applicant asserting small entity status. See 37 CFR 1.27

❑ Applicant changing to regular undiscounted fee status.

NOTE: Absent a valid certification of Micro Entity Status (see forms PTO/SB/15A and 15B), issue fee payment in the micro entity amount will not be accepted at the risk of application abandonment.
NOTE: If the application was previously under micro entity status, checking this box will be taken to be a notification of loss of entitlement to micro entity status.
NOTE: Checking this box will be taken to be a notification of loss of entitlement to small or micro entity status, as applicable.

NOTE: This form must be signed in accordance with 37 CFR 1.31 and 1.33. See 37 CFR 1.4 for signature requirements and certifications.

Authorized Signature _____ Date _____

Typed or printed name _____ Registration No. _____

UNITED STATES DEPARTMENT OF COMMERCE
United States Patent and Trademark Office
Address: COMMISSIONER FOR PATENTS
P.O. Box 1450
Alexandria, Virginia 22313-1450
www.uspto.gov

APPLICATION NO.	FILING DATE	FIRST NAMED INVENTOR	ATTORNEY DOCKET NO.	CONFIRMATION NO.
17/152,399	01/19/2021	Yechezkal Evan Spero	TRCH0103PUSP3	6274

22045 7590 11/08/2021
Brooks Kushman
1000 Town Center
22nd Floor
Southfield, MI 48075

EXAMINER
LE, TUNG X

ART UNIT	PAPER NUMBER
2844	

DATE MAILED: 11/08/2021

Determination of Patent Term Adjustment under 35 U.S.C. 154 (b)
(Applications filed on or after May 29, 2000)

The Office has discontinued providing a Patent Term Adjustment (PTA) calculation with the Notice of Allowance.

Section 1(h)(2) of the AIA Technical Corrections Act amended 35 U.S.C. 154(b)(3)(B)(i) to eliminate the requirement that the Office provide a patent term adjustment determination with the notice of allowance. See Revisions to Patent Term Adjustment, 78 Fed. Reg. 19416, 19417 (Apr. 1, 2013). Therefore, the Office is no longer providing an initial patent term adjustment determination with the notice of allowance. The Office will continue to provide a patent term adjustment determination with the Issue Notification Letter that is mailed to applicant approximately three weeks prior to the issue date of the patent, and will include the patent term adjustment on the patent. Any request for reconsideration of the patent term adjustment determination (or reinstatement of patent term adjustment) should follow the process outlined in 37 CFR 1.705.

Any questions regarding the Patent Term Extension or Adjustment determination should be directed to the Office of Patent Legal Administration at (571)-272-7702. Questions relating to issue and publication fee payments should be directed to the Customer Service Center of the Office of Patent Publication at 1-(888)-786-0101 or (571)-272-4200.

OMB Clearance and PRA Burden Statement for PTOL-85 Part B

The Paperwork Reduction Act (PRA) of 1995 requires Federal agencies to obtain Office of Management and Budget approval before requesting most types of information from the public. When OMB approves an agency request to collect information from the public, OMB (i) provides a valid OMB Control Number and expiration date for the agency to display on the instrument that will be used to collect the information and (ii) requires the agency to inform the public about the OMB Control Number's legal significance in accordance with 5 CFR 1320.5(b).

The information collected by PTOL-85 Part B is required by 37 CFR 1.311. The information is required to obtain or retain a benefit by the public which is to file (and by the USPTO to process) an application. Confidentiality is governed by 35 U.S.C. 122 and 37 CFR 1.14. This collection is estimated to take 30 minutes to complete, including gathering, preparing, and submitting the completed application form to the USPTO. Time will vary depending upon the individual case. Any comments on the amount of time you require to complete this form and/or suggestions for reducing this burden, should be sent to the Chief Information Officer, U.S. Patent and Trademark Office, U.S. Department of Commerce, P.O. Box 1450, Alexandria, Virginia 22313-1450. DO NOT SEND FEES OR COMPLETED FORMS TO THIS ADDRESS. SEND TO: Commissioner for Patents, P.O. Box 1450, Alexandria, Virginia 22313-1450. Under the Paperwork Reduction Act of 1995, no persons are required to respond to a collection of information unless it displays a valid OMB control number.

Privacy Act Statement

The Privacy Act of 1974 (P.L. 93-579) requires that you be given certain information in connection with your submission of the attached form related to a patent application or patent. Accordingly, pursuant to the requirements of the Act, please be advised that: (1) the general authority for the collection of this information is 35 U.S.C. 2(b)(2); (2) furnishing of the information solicited is voluntary; and (3) the principal purpose for which the information is used by the U.S. Patent and Trademark Office is to process and/or examine your submission related to a patent application or patent. If you do not furnish the requested information, the U.S. Patent and Trademark Office may not be able to process and/or examine your submission, which may result in termination of proceedings or abandonment of the application or expiration of the patent.

The information provided by you in this form will be subject to the following routine uses:

1. The information on this form will be treated confidentially to the extent allowed under the Freedom of Information Act (5 U.S.C. 552) and the Privacy Act (5 U.S.C 552a). Records from this system of records may be disclosed to the Department of Justice to determine whether disclosure of these records is required by the Freedom of Information Act.
2. A record from this system of records may be disclosed, as a routine use, in the course of presenting evidence to a court, magistrate, or administrative tribunal, including disclosures to opposing counsel in the course of settlement negotiations.
3. A record in this system of records may be disclosed, as a routine use, to a Member of Congress submitting a request involving an individual, to whom the record pertains, when the individual has requested assistance from the Member with respect to the subject matter of the record.
4. A record in this system of records may be disclosed, as a routine use, to a contractor of the Agency having need for the information in order to perform a contract. Recipients of information shall be required to comply with the requirements of the Privacy Act of 1974, as amended, pursuant to 5 U.S.C. 552a(m).
5. A record related to an International Application filed under the Patent Cooperation Treaty in this system of records may be disclosed, as a routine use, to the International Bureau of the World Intellectual Property Organization, pursuant to the Patent Cooperation Treaty.
6. A record in this system of records may be disclosed, as a routine use, to another federal agency for purposes of National Security review (35 U.S.C. 181) and for review pursuant to the Atomic Energy Act (42 U.S.C. 218(c)).
7. A record from this system of records may be disclosed, as a routine use, to the Administrator, General Services, or his/her designee, during an inspection of records conducted by GSA as part of that agency's responsibility to recommend improvements in records management practices and programs, under authority of 44 U.S.C. 2904 and 2906. Such disclosure shall be made in accordance with the GSA regulations governing inspection of records for this purpose, and any other relevant (i.e., GSA or Commerce) directive. Such disclosure shall not be used to make determinations about individuals.
8. A record from this system of records may be disclosed, as a routine use, to the public after either publication of the application pursuant to 35 U.S.C. 122(b) or issuance of a patent pursuant to 35 U.S.C. 151. Further, a record may be disclosed, subject to the limitations of 37 CFR 1.14, as a routine use, to the public if the record was filed in an application which became abandoned or in which the proceedings were terminated and which application is referenced by either a published application, an application open to public inspection or an issued patent.
9. A record from this system of records may be disclosed, as a routine use, to a Federal, State, or local law enforcement agency, if the USPTO becomes aware of a violation or potential violation of law or regulation.

Notice of Allowability	Application No. 17/152,399	Applicant(s) Spero, Yechezkal Evan	
	Examiner TUNG X LE	Art Unit 2844	AIA (FITF) Status No

-- The MAILING DATE of this communication appears on the cover sheet with the correspondence address--

All claims being allowable, PROSECUTION ON THE MERITS IS (OR REMAINS) CLOSED in this application. If not included herewith (or previously mailed), a Notice of Allowance (PTOL-85) or other appropriate communication will be mailed in due course. **THIS NOTICE OF ALLOWABILITY IS NOT A GRANT OF PATENT RIGHTS.** This application is subject to withdrawal from issue at the initiative of the Office or upon petition by the applicant. See 37 CFR 1.313 and MPEP 1308.

1. ☑ This communication is responsive to 7/14/2021.
   ☐ A declaration(s)/affidavit(s) under **37 CFR 1.130(b)** was/were filed on _____.

2. ☐ An election was made by the applicant in response to a restriction requirement set forth during the interview on _____; the restriction requirement and election have been incorporated into this action.

3. ☑ The allowed claim(s) is/are 1-33 . As a result of the allowed claim(s), you may be eligible to benefit from the **Patent Prosecution Highway** program at a participating intellectual property office for the corresponding application. For more information, please see **http://www.uspto.gov/patents/init_events/pph/index.jsp** or send an inquiry to **PPHfeedback@uspto.gov.**

4. ☐ Acknowledgment is made of a claim for foreign priority under 35 U.S.C. § 119(a)-(d) or (f).

   Certified copies:

   a) ☐ All b) ☐ Some* c) ☐ None of the:

   1. ☐ Certified copies of the priority documents have been received.
   2. ☐ Certified copies of the priority documents have been received in Application No. _____ .
   3. ☐ Copies of the certified copies of the priority documents have been received in this national stage application from the International Bureau (PCT Rule 17.2(a)).

   * Certified copies not received: _____ .

Applicant has THREE MONTHS FROM THE "MAILING DATE" of this communication to file a reply complying with the requirements noted below. Failure to timely comply will result in ABANDONMENT of this application.
THIS THREE-MONTH PERIOD IS NOT EXTENDABLE.

5. ☐ CORRECTED DRAWINGS (as "replacement sheets") must be submitted.
   ☐ including changes required by the attached Examiner's Amendment / Comment or in the Office action of Paper No./Mail Date _____ .

   Identifying indicia such as the application number (see 37 CFR 1.84(c)) should be written on the drawings in the front (not the back) of each sheet. Replacement sheet(s) should be labeled as such in the header according to 37 CFR 1.121(d).

6. ☐ DEPOSIT OF and/or INFORMATION about the deposit of BIOLOGICAL MATERIAL must be submitted. Note the attached Examiner's comment regarding REQUIREMENT FOR THE DEPOSIT OF BIOLOGICAL MATERIAL.

Attachment(s)

1. ☑ Notice of References Cited (PTO-892)
2. ☑ Information Disclosure Statements (PTO/SB/08), Paper No./Mail Date 7/8/2021.
3. ☐ Examiner's Comment Regarding Requirement for Deposit of Biological Material _____.
4. ☐ Interview Summary (PTO-413), Paper No./Mail Date. _____.
5. ☐ Examiner's Amendment/Comment
6. ☑ Examiner's Statement of Reasons for Allowance
7. ☐ Other _____.

/TUNG X LE/
Primary Examiner, Art Unit 2844

DETAILED ACTION

Notice of Pre-AIA or AIA Status

The present application is being examined under the pre-AIA first to invent provisions.

This Office Action is in response to the Applicant's amendment submitted on July 14, 2021. In virtue of this amendment, claims 1-33 are now pending in the instant application.

Information Disclosure Statement

1. The information disclosure statement (IDS) submitted on 7/8/2021 is in compliance with the provisions of 37 CFR 1.97. Accordingly, the information disclosure statement is being considered by the examiner.

Allowable Subject Matter

2. Claims **1-33** are allowed.

3. The following is an examiner's statement of reasons for allowance:

Prior art of record fails to disclose or fairly suggest the following limitations:

A system, for a motor vehicle, comprising … "*the one or more processors to receive first data, including at least map data, indicating a road curvature upcoming along a road on which the motor vehicle is traveling; determine a light change, the change adapting a light pattern of the headlamps in at least one of color, intensity or spatial distribution to increase light in a direction of the road curvature ahead of the motor vehicle and shaping light based at least in part on the road curvature; and control at least a first plurality of the LED light sources to provide light based at least in part on the determined light change and prior to the motor vehicle reaching the road curvature*", in combination with the remaining claimed limitations as claimed in independent claim 1 (claims 2-11 are allowed as being dependent on claim 1).

A non-transitory computer-readable storage medium, storing instructions that, when executed by one or more processors of a motor vehicle … "*the one or more processors to receive first data, including at least map data, indicating a road curvature upcoming along a road on which the motor vehicle is traveling; determine a light change, the change adapting a light pattern of the headlamps in at least one of color, intensity or spatial distribution to increase light in a direction of the road curvature ahead of the motor vehicle and shaping light based at least in part on the road curvature; and control at least a first plurality of the LED light sources to provide light based at least in part on the determined light change and prior to the motor vehicle reaching the road curvature*", in combination with the remaining claimed limitations as claimed in independent claim 12 (claims 13-22 are allowed as being dependent on claim 12).

A computer-implemented method for adapting light from headlamps of a motor vehicle … comprising "*determining an upcoming shape change of a road, ahead of the motor vehicle, based on first data, including map data, indicating the shape change; determining a light output, the output adapting a light pattern of the headlamps in at least one of color, intensity or spatial distribution to increase light in a direction associated with the shape change ahead of the motor vehicle and shaping light based on the shape change; and prior to reaching the road shape change, causing at least a first plurality of the LED light sources to provide light based at least in part on the determined light output*", in combination with the remaining claimed limitations as claimed in independent claim 23 (claims 24-33 are allowed as being dependent on claim 23).

Any comments considered necessary by applicant must be submitted no later than the payment of the issue fee and, to avoid processing delays, should preferably accompany the issue fee. Such submissions should be clearly labeled "Comments on Statement of Reasons for Allowance."

Conclusion

4. The prior art made of record and not relied upon is considered pertinent to applicant's disclosure.

Prior art Stam et al. – US 6,049,171

Prior art Schofield et al. – US 5,796,094

5. Any inquiry concerning this communication or earlier communications from the examiner should be directed to TUNG X LE whose telephone number is (571)272-6010. The examiner can normally be reached Monday to Friday from 10am to 6pm.

Examiner interviews are available via telephone, in-person, and video conferencing using a USPTO supplied web-based collaboration tool. To schedule an interview, applicant is encouraged to use the USPTO Automated Interview Request (AIR) at http://www.uspto.gov/interviewpractice.

If attempts to reach the examiner by telephone are unsuccessful, the examiner's supervisor, Amy C Johnson can be reached on 571-272-2238. The fax phone number for the organization where this application or proceeding is assigned is 571-273-8300.

Information regarding the status of published or unpublished applications may be obtained from Patent Center. Unpublished application information in Patent Center is available to registered users. To file and manage patent submissions in Patent Center, visit: https://patentcenter.uspto.gov. Visit https://www.uspto.gov/patents/apply/patent-center for more information about Patent Center and https://www.uspto.gov/patents/docx for information about filing in DOCX format. For additional questions, contact the Electronic Business Center (EBC) at 866-217-9197 (toll-free). If you would like assistance from a USPTO Customer Service Representative, call 800-786-9199 (IN USA OR CANADA) or 571-272-1000.

/TUNG X LE/
Primary Examiner, Art Unit 2844
October 22, 2021

Notice of References Cited	Application/Control No. 17/152,399	Applicant(s)/Patent Under Reexamination Spero, Yechezkal Evan	
	Examiner TUNG X LE	Art Unit 2844	Page 1 of 1

U.S. PATENT DOCUMENTS

*		Document Number Country Code-Number-Kind Code	Date MM-YYYY	Name	CPC Classification	US Classification
*	A	US-6049171-A	04-2000	Stam; Joseph S.	B60Q1/1423	315/82
*	B	US-5796094-A	08-1998	Schofield; Kenneth	B60N2/002	250/208.1
	C					
	D					
	E					
	F					
	G					
	H					
	I					
	J					
	K					
	L					
	M					

FOREIGN PATENT DOCUMENTS

*		Document Number Country Code-Number-Kind Code	Date MM-YYYY	Country	Name	CPC Classification
	N					
	O					
	P					
	Q					
	R					
	S					
	T					

NON-PATENT DOCUMENTS

*		Include as applicable: Author, Title Date, Publisher, Edition or Volume, Pertinent Pages)
	U	
	V	
	W	
	X	

*A copy of this reference is not being furnished with this Office action. (See MPEP § 707.05(a).)
Dates in MM-YYYY format are publication dates. Classifications may be US or foreign.

Search Notes	Application/Control No.	Applicant(s)/Patent Under Reexamination
	17/152,399	Spero, Yechezkal Evan
	Examiner	**Art Unit**
	TUNG X LE	2844

CPC - Searched*		
Symbol	**Date**	**Examiner**
B60Q: 1/04, 1/085, 1/1423, 2300/112, 2300/134	07/01/2021	TXL
updated above	10/22/2021	TXL

CPC Combination Sets - Searched*		
Symbol	**Date**	**Examiner**

US Classification - Searched*			
Class	**Subclass**	**Date**	**Examiner**

* See search history printout included with this form or the SEARCH NOTES box below to determine the scope of the search.

Search Notes		
Search Notes	**Date**	**Examiner**
EAST (see search history printout)	07/01/2021	TXL
CPC Searches	07/01/2021	TXL
Inventor and Assignee Searches	07/01/2021	TXL
Citations: Forward and Backward	07/01/2021	TXL
Updated EAST (see search history printout)	10/22/2021	TXL

Interference Search			
US Class/CPC Symbol	**US Subclass/CPC Group**	**Date**	**Examiner**
B60Q	1/085, 1/1423	10/22/2021	TXL

Issue Classification	Application/Control No.	Applicant(s)/Patent Under Reexamination
	17/152,399	Spero, Yechezkal Evan
	Examiner	**Art Unit**
	TUNG X LE	2844

CPC						
Symbol					**Type**	**Version**
B60Q	/	1	/	04	F	2013-01-01
F21K	/	9	/	23	I	2016-08-01
F21K	/	9	/	232	I	2016-08-01
B60Q	/	1	/	085	I	2013-01-01
B60Q	/	1	/	1423	I	2013-01-01
F21V	/	19	/	02	I	2013-01-01
F21V	/	23	/	0471	I	2013-01-01
F21V	/	23	/	0464	I	2013-01-01
F21V	/	23	/	0478	I	2013-01-01
F21S	/	4	/	28	I	2016-01-01
F21S	/	41	/	143	I	2018-01-01
F21S	/	41	/	147	I	2018-01-01
F21S	/	41	/	65	I	2018-01-01
H05B	/	47	/	105	I	2020-01-01
H05B	/	45	/	20	I	2020-01-01
H05B	/	47	/	10	I	2020-01-01
H05B	/	47	/	11	I	2020-01-01
F21S	/	41	/	153	I	2018-01-01
H05B	/	47	/	115	I	2020-01-01
H05B	/	45	/	395	I	2020-01-01
H05B	/	3	/	008	I	2013-01-01
F21V	/	29	/	74	A	2015-01-15
F21Y	/	2115	/	10	A	2016-08-01
B60Q	/	2300	/	054	A	2013-01-01
B60Q	/	2300	/	112	A	2013-01-01
B60Q	/	2300	/	116	A	2013-01-01
B60Q	/	2300	/	122	A	2013-01-01
B60Q	/	2300	/	134	A	2013-01-01
B60Q	/	2300	/	142	A	2013-01-01
B60Q	/	2300	/	21	A	2013-01-01
B60Q	/	2300	/	23	A	2013-01-01

NONE (Assistant Examiner)	(Date)	**Total Claims Allowed:** 33	
/TUNG X LE/ Primary Examiner, Art Unit 2844 (Primary Examiner)	22 October 2021 (Date)	O.G. Print Claim(s) 1	O.G. Print Figure 22

U.S. Patent and Trademark Office

Part of Paper No.: 20211022

Issue Classification	Application/Control No.	Applicant(s)/Patent Under Reexamination
	17/152,399	Spero, Yechezkal Evan
	Examiner	**Art Unit**
	TUNG X LE	2844

CPC

Symbol					Type	Version
B60Q	/	2300	/	312	A	2013-01-01
B60Q	/	2300	/	314	A	2013-01-01
B60Q	/	2300	/	322	A	2013-01-01
B60Q	/	2300	/	41	A	2013-01-01
B60Q	/	2300	/	42	A	2013-01-01
F21V	/	21	/	02	A	2013-01-01
F21V	/	21	/	30	A	2013-01-01
F21W	/	2111	/	023	A	2013-01-01
F21W	/	2111	/	027	A	2013-01-01
F21W	/	2111	/	08	A	2013-01-01
F21W	/	2131	/	103	A	2013-01-01
F21W	/	2131	/	40	A	2013-01-01
F21Y	/	2113	/	00	A	2013-01-01
F21W	/	2102	/	00	A	2018-01-01
Y02B	/	20	/	30	A	2013-01-01
Y02B	/	20	/	40	A	2013-01-01

CPC Combination Sets

Symbol					Type	Set	Ranking	Version
	/		/					

NONE (Assistant Examiner)	(Date)	**Total Claims Allowed:** 33	
/TUNG X LE/ Primary Examiner, Art Unit 2844 (Primary Examiner)	22 October 2021 (Date)	O.G. Print Claim(s) 1	O.G. Print Figure 22

U.S. Patent and Trademark Office

Part of Paper No.: 20211022

Issue Classification	Application/Control No.	Applicant(s)/Patent Under Reexamination
	17/152,399	Spero, Yechezkal Evan
	Examiner	**Art Unit**
	TUNG X LE	2844

INTERNATIONAL CLASSIFICATION				
CLAIMED				
B60Q	/	1	/	04

NON-CLAIMED				
	/		/	

US ORIGINAL CLASSIFICATION	
CLASS	**SUBCLASS**

CROSS REFERENCES(S)						
CLASS	**SUBCLASS (ONE SUBCLASS PER BLOCK)**					

NONE (Assistant Examiner) (Date)		**Total Claims Allowed:** 33	
/TUNG X LE/ Primary Examiner, Art Unit 2844 (Primary Examiner) (Date)	22 October 2021	O.G. Print Claim(s) 1	O.G. Print Figure 22

U.S. Patent and Trademark Office Part of Paper No.: 20211022

Issue Classification	Application/Control No.	Applicant(s)/Patent Under Reexamination
	17/152,399	Spero, Yechezkal Evan
	Examiner	**Art Unit**
	TUNG X LE	2844

☑ Claims renumbered in the same order as presented by applicant ☐ CPA ☐ T.D. ☐ R.1.47

CLAIMS

Final	Original	Final	Original	Final	Original	Final	Original	Final	Original	Final	Original	Final	Original	Final	Original
	1		10		19		28								
	2		11		20		29								
	3		12		21		30								
	4		13		22		31								
	5		14		23		32								
	6		15		24		33								
	7		16		25										
	8		17		26										
	9		18		27										

NONE (Assistant Examiner)	(Date)	**Total Claims Allowed:** 33	
/TUNG X LE/ Primary Examiner, Art Unit 2844 (Primary Examiner)	22 October 2021 (Date)	O.G. Print Claim(s) 1	O.G. Print Figure 22

U.S. Patent and Trademark Office

Part of Paper No.: 20211022

EAST Search History

EAST Search History (Prior Art)

Ref #	Hits	Search Query	DBs	Default Operator	Plurals	Time Stamp
L1	17	"10604360"	US-PGPUB; USPAT; USOCR; FPRS; EPO; JPO; DERWENT; IBM_TDB	OR	ON	2021/10/22 09:16
L10	2	"10894503".pn.	US-PGPUB; USPAT; USOCR; FPRS; EPO; JPO; DERWENT; IBM_TDB	OR	ON	2021/10/22 09:28
L11	61	("20010014019" | "20020022774" | "20020022927" | "20020039238" | "20020046100" | "20020047628" | "20020047646" | "20020057340" | "20020130326" | "20040052076" | "20040061605" | "20040105264" | "20040138726" | "20040230358" | "20060222213" | "20080136356" | "20090315485" | "20100052550" | "20100302779" | "20110211110" | "20120001566" | "20120091897" | "20120262575" |	US-PGPUB; USPAT; USOCR	OR	ON	2021/10/22 09:28

		"20120283908" | "20130258688" | "4597033" | "5018290" | "5033099" | "5130909" | "5546475" | "5561346" | "5577832" | "5749646" | "5785243" | "5803579" | "5921660" | "5969754" | "5983161" | "5994844" | "6046549" | "6149283" | "6166496" | "6281632" | "6340868" | "6346777" | "6379022" | "6385352" | "6394614" | "6406172" | "6483439" | "6498440" | "6499860" | "6528954" | "6601982" | "6676282" | "6820998" | "7524097" | "8045760" | "8115394" | "8665079" | "9398270").PN. OR ("10894503").URPN.				
L19	765	("20020003571" | "20020113873" | "20020159270" | "20020188392" | "20030025597" | "20030052773" | "20030137586" | "20030156015" | "20030169522" | "20030222982" | "20030236622" | "20040149504" | "20040200948" | "20050073853" | "20050219852" | "20050232469" | "20050237385" | "20060018511" | "20060018512" | "20060050018" | "20060091813" |	US-PGPUB; USPAT; USOCR	OR	ON	2021/10/22 09:30

		"20060103727"				
		"20060125919"				
		"20060164230"				
		"20060171704"				
		"20060250501"				
		"20070104476"				
		"20070109406"				
		"20070120657"				
		"20070242339"				
		"20080147321"				
		"20090052003"				
		"20090113509"				
		"20090190015"				
		"20090201137"				
		"20090243824"				
		"20090256938"				
		"20120045112"				
		"2598420"	"2632040"			
		"2827594"	"2959709"			
		"3751711"	"3985424"			
		"4037134"	"4200361"			
		"4214266"	"4218698"			
		"4236099"	"4247870"			
		"4249160"	"4257703"			
		"4258979"	"4266856"			
		"4277804"	"4281898"			
		"4288814"	"4355271"			
		"4357558"	"4381888"			
		"4420238"	"4431896"			
		"4443057"	"4460831"			
		"4481450"	"4491390"			
		"4512637"	"4529275"			
		"4529873"	"4546551"			
		"4549208"	"4571082"			
		"4572619"	"4580875"			
		"4599544"	"4600913"			
		"4603946"	"4614415"			
		"4620141"	"4623222"			
		"4626850"	"4629941"			
		"4630109"	"4632509"			
		"4638287"	"4647161"			
		"4653316"	"4665321"			
		"4669825"	"4671615"			
		"4672457"	"4676601"			

		"4690508" | "4692798" | "4697883" | "4701022" | "4713685" | "4717830" | "4727290" | "4731669" | "4741603" | "4768135" | "4772942" | "4789904" | "4793690" | "4817948" | "4820933" | "4825232" | "4838650" | "4847772" | "4855822" | "4859031").PN. OR ("4862037" | "4867561" | "4871917" | "4872051" | "4881019" | "4882466" | "4882565" | "4886960" | "4891559" | "4892345" | "4895790" | "4896030" | "4900133" | "4907870" | "4910591" | "4916374" | "4917477" | "4931937" | "4937796" | "4942533" | "4953305" | "4956591" | "4961625" | "4967319" | "4970653" | "4971430" | "4974078" | "4975703" | "4987357" | "4987410" | "4991054" | "5001558" | "5003288" | "5008946" | "5012082" | "5016977" | "5027001" | "5027200" | "5036437" | "5044706" | "5050966" | "5055668" | "5059877" | "5063603" | "5064274" | "5072154" | "5086253" | "5086510" | "5096287" | "5097362" | "5100093" | "5121200" | "5124549" | "5128874" | "5130709" | "5144685" | "5148014" | "5166681" | "5168378" | "5170374" | "5172235" | "5177685" | "5182502" | "5184956" | "5187383" | "5189561" |				

		"5193000" | "5193029" | "5204778" | "5208701" | "5214408" | "5225827" | "5235178" | "5245422" | "5246193" | "5253109" | "5276389" | "5285060" | "5289182" | "5289321" | "5298732" | "5304980" | "5305012" | "5307136" | "5309137" | "5313072" | "5325096" | "5325386" | "5329206" | "5331312" | "5336980" | "5341437" | "5351044" | "5355118" | "5365603" | "5369590" | "5371535" | "5374852" | "5379196" | "5386285" | "5394333" | "5406395" | "5408346" | "5410346" | "5414257" | "5414461" | "5416313" | "5416318" | "5416478" | "5424952" | "5426294" | "5430431" | "5434407" | "5434927" | "5440428" | "5444478" | "5448484" | "5451822" | "5457493" | "5461357" | "5461361" | "5467284" | "5469298" | "5471515" | "5475494").PN. OR ("5483060" | "5487116" | "5488496" | "5493392" | "5498866" | "5500766" | "5508592" | "5510983" | "5515448" | "5521633" | "5528698" | "5529138" | "5530240" | "5530420" | "5530771" | "5535144" | "5535314" | "5537003" | "5539397" | "5541590" | "5550677" | "5555136" | "5555312" | "5555555" | "5568027" | "5568316" | "5574443" | "5581464" |			

		"5582383" | "5594222" | "5612883" | "5614788" | "5617085" | "5619370" | "5627586" | "5634709" | "5638116" | "5642093" | "5642299" | "5646612" | "5648835" | "5650944" | "5660454" | "5661303" | "5666028" | "5668663" | "5670935" | "5673019" | "5675489" | "5676484" | "5677851" | "5680263" | "5699044" | "5699057" | "5715093" | "5724187" | "5724316" | "5737226" | "5745310" | "5757949" | "5760826" | "5760828" | "5760931" | "5760962" | "5761094" | "5764139" | "5765116" | "5765940" | "5781437" | "5786772" | "5790403" | "5790973" | "5793308" | "5793420" | "5796094" | "5798575" | "5808589" | "5811888" | "5835255" | "5835613" | "5837994" | "5841126" | "5844505" | "5844682" | "5845000" | "5848802" | "5850176" | "5850254" | "5867591" | "5877707" | "5877897" | "5878370" | "5883739" | "5884212" | "5890021" | "5890083" | "5892855" | "5896085" | "5899956" | "5912534" | "5914815" | "5923027" | "5929784" | "5929786" | "5938320" | "5940120" | "5942853" | "5949331" | "5956181" | "5959367" | "5959555" | "5963247" | "5964822" | "5971552" | "5986796" | "5990469" |				

		"5990649" | "6001486" | "6005492" | "6009336" | "6009377" | "6020704" | "6031484" | "6037860" | "6037975").PN. OR ("6044321" | "6049171" | "6049619" | "6057754" | "6066933" | "6084519" | "6087953" | "6097023" | "6097024" | "6104552" | "6107939" | "6116743" | "6124647" | "6124886" | "6139172" | "6144022" | "6144158" | "6150014" | "6166628" | "6169940" | "6172613" | "6173222" | "6175164" | "6175300" | "6198409" | "6201236" | "6201642" | "6218960" | "6222447" | "6222460" | "6226389" | "6226592" | "6229319" | "6243003" | "6246961" | "6249214" | "6250148" | "6259412" | "6266082" | "6266442" | "6269308" | "6278377" | "6282483" | "6285393" | "6291906" | "6292111" | "6292752" | "6294989" | "6297781" | "6302545" | "6310611" | "6311119" | "6313454" | "6315421" | "6317057" | "6318870" | "6320176" | "6320282" | "6324450" | "6326613" | "6329925" | "6330511" | "6333759" | "6341523" | "6353392" | "6362729" | "6366213" | "6366236" | "6370329" | "6388565" | "6388580" | "6396397" | "6411204" | "6411328" | "6420975" | "6424273" | "6428172" | "6429594" |				

		"6430303" | "6433676" | "6433817" | "6441748" | "6442465" | "6469739" | "6472979" | "6477464" | "6485155" | "6497503" | "6498620" | "6513252" | "6516272" | "6516664" | "6523964" | "6534884" | "6539306" | "6540193" | "6547133" | "6553130" | "6559435" | "6574033" | "6578017" | "6580996" | "6587573" | "6589625" | "6590719" | "6593565" | "6594583" | "6611202" | "6611610" | "6627918" | "6631994" | "6636258" | "6648477" | "6650233" | "6650455" | "6671607" | "6672731" | "6674562" | "6678056" | "6678614" | "6680792" | "6690268" | "6691008" | "6700605" | "6703925").PN. OR ("6704621" | "6708100" | "6710908" | "6711474" | "6714331" | "6717610" | "6728393" | "6728623" | "6735506" | "6741377" | "6744353" | "6748312" | "6757109" | "6762867" | "6764210" | "6765480" | "6784828" | "6794119" | "6795221" | "6801127" | "6801244" | "6802617" | "6806452" | "6812463" | "6819231" | "6822563" | "6823241" | "6823261" | "6824281" | "6831261" | "6838980" | "6842189" | "6847487" | "6859148" | "6861809" | "6873253" | "6882287" | "6888447" | "6889161" | "6891563" |				

		"6898518" | "6906620" | "6906639" | "6909753" | "6914521" | "6932669" | "6933837" | "6940423" | "6941216" | "6946978" | "6950035" | "6953253" | "6959994" | "6961178" | "6961661" | "6967569" | "6968266" | "6968736" | "6975775" | "6989736" | "6995687" | "7004593" | "7004606" | "7005974" | "7012727" | "7023331" | "7030738" | "7030778" | "7038577" | "7046448" | "7057505" | "7057681" | "7062300" | "7065432" | "7068289" | "7085633" | "7085637" | "7092548" | "7095432" | "7106213" | "7110021" | "7110156" | "7116246" | "7121028" | "7123168" | "7133661" | "7149613" | "7151844" | "7167796" | "7187498" | "7195381" | "7202776" | "7202987" | "7205904" | "7221363" | "7224324" | "7227459" | "7227611" | "7235918" | "7248287" | "7249860" | "7253723" | "7255451" | "7271951" | "7295682" | "7304661" | "7311406" | "7325934" | "7325935" | "7337055" | "7338177" | "7339149" | "7344261" | "7355524" | "7360932" | "7370983" | "7375803" | "7380948" | "7388182" | "7402786" | "7420756" | "7423248" | "7423821" | "7425076" | "7429998").PN. OR ("7432967" | "7446924" |				

		"7459664" | "7460007" | "7463138" | "7474963" | "7489374" | "7495719" | "7525604" | "7526103" | "7541743" | "7543946" | "7545429" | "7548291" | "7551103" | "7561181" | "7565006" | "7567291" | "7613327" | "7616781" | "7619508" | "7629996" | "7633383" | "7639149" | "7653215" | "7655894" | "7663798" | "7676087" | "7679498" | "7720580" | "7724434" | "7731403" | "7742864" | "7791694" | "7792329" | "7842154" | "7843451" | "7854514" | "7855755" | "7855778" | "7859565" | "7881496" | "7903324" | "7903335" | "7914187" | "7930160" | "7949152" | "7965357" | "7994462" | "8017898" | "8027691" | "8090153" | "8095310" | "8098142" | "8120652" | "8184159" | "8203440" | "8222588" | "8224031" | "8289142" | "8289430" | "8305471" | "8308325" | "8314689" | "8324552" | "8339526" | "8405726" | "D351370" | "RE30835").PN. OR ("8665079").URPN.				
L20	234	("20010014019" | "20020022774" | "20020022927" | "20020039238" | "20020046100" | "20020047628" | "20020047646" | "20020057340" |	US-PGPUB; USPAT; USOCR; FPRS; EPO; JPO; DERWENT; IBM_TDB	OR	ON	2021/10/22 09:35

		"20020130326" | "20040052076" | "20040061605" | "20040105264" | "20040138726" | "20040230358" | "20060222213" | "20080136356" | "20090315485" | "20100052550" | "20100302779" | "20110211110" | "20120001566" | "20120091897" | "20120262575" | "20120283908" | "20120287493" | "20130258688" | "3316442" | "4597033" | "5018290" | "5033099" | "5130909" | "5546475" | "5561346" | "5577832" | "5749646" | "5785243" | "5803579" | "5921660" | "5969754" | "5983161" | "5994844" | "6046549" | "6149283" | "6166496" | "6227679" | "6281632" | "6340868" | "6346777" | "6379022" | "6385352" | "6394614" | "6406172" | "6483439" | "6498440" | "6499860" | "6528954" | "6587573" | "6601982" | "6676282" | "6820998" | "6861809" | "7524097" | "8045760" | "8115394" | "8665079" | "9398270").PN.				
L21	22,639	vehicle with (headlamp or headlight or lamp or (light near2 source)) and	US-PGPUB; USPAT; USOCR; FPRS; EPO;	OR	ON	2021/10/22 09:57

		(memory with (data or instruction))	JPO; DERWENT; IBM_TDB			
L22	18	(yechezkal near3 evan near3 spero).in.	US-PGPUB; USPAT; USOCR; FPRS; EPO; JPO; DERWENT; IBM_TDB	OR	ON	2021/10/22 09:58
L23	16,896	(B60Q1/04 or B60Q1/085 or B60Q1/1423 or B60Q2300/112 or B60Q2300/134).CPC.	US-PGPUB; USPAT; USOCR; FPRS; EPO; JPO; DERWENT; IBM_TDB	OR	ON	2021/10/22 09:58
L24	38,900	21 or 23	US-PGPUB; USPAT; USOCR; FPRS; EPO; JPO; DERWENT; IBM_TDB	OR	ON	2021/10/22 09:59
L25	513	24 and ((adjust$4 or chang$3 or shap$3) near2 light) and ((headlight or headlamp) with LED.u/c.)	US-PGPUB; USPAT; USOCR; FPRS; EPO; JPO; DERWENT; IBM_TDB	OR	ON	2021/10/22 09:59
L26	31	25 and (map with data) and (road with (curvature or curv$3))	US-PGPUB; USPAT; USOCR; FPRS; EPO; JPO; DERWENT; IBM_TDB	OR	ON	2021/10/22 10:00
L27	249	("20020040962" | "2131888" | "2632040" | "2827594" | "3179845" | "3581276" | "3663819" |	US-PGPUB; USPAT; USOCR	OR	ON	2021/10/22 10:03

		"4139801" | "4151526" | "4236099" | "4258979" | "4286308" | "4357558" | "4376909" | "4479173" | "4599544" | "4645975" | "4665321" | "4692798" | "4716298" | "4727290" | "4768135" | "4862037" | "4891559" | "4930742" | "4934273" | "4967319" | "5008946" | "5036437" | "5072154" | "5086253" | "5096287" | "5124549" | "5166681" | "5182502" | "5187383" | "5235178" | "5329206" | "5347261" | "5347459" | "5355146" | "5379104" | "5396054" | "5402170" | "5416318" | "5426294" | "5428464" | "5430450" | "5434407" | "5451822" | "5452004" | "5471515" | "5475441" | "5481268" | "5483346" | "5485155" | "5508592" | "5537003" | "5541724" | "5550677" | "5554912" | "5574463" | "5587929" | "5592146" | "5614788" | "5621460" | "5660454" | "5666028" | "5684473" | "5707129" | "5710565" | "5714751" | "5715093" | "5736816" | "5751832" | "5781105" | "5786787" | "5796094" | "5798727" | "5811888" | "5812321" | "5835613" | "5837994" | "5841126" | "5845000" | "5867214" | "5877897" | "5905457" | "5912534" | "5923027" | "5942853" | "5990469" | "6008486" | "6018308" | "6049171" |			

		"6097023" | "6102546" | "6130421" | "6140933" | "6144158" | "6166698" | "6184781" | "6255639" | "6281632" | "6329925" | "6349782" | "6356376" | "6379013" | "6396040" | "6396397" | "6403942" | "6442465" | "6443602" | "6465962" | "6469739" | "6483438" | "6507779" | "6617564").PN. OR ("6861809").URPN.				
L28	8	("20020036901" | "20100188864" | "20160039286" | "20170136939" | "20170158112" | "20180099605" | "6220735" | "6861809").PN. OR ("10953790").URPN.	US-PGPUB; USPAT; USOCR	OR	ON	2021/10/22 10:05
L29	457	25 not 26	US-PGPUB; USPAT; USOCR	OR	ON	2021/10/22 10:12
L30	145	("20020040962" | "2131888" | "2632040" | "2827594" | "3179845" | "3581276" | "4139801" | "4236099" | "4357558" | "4376909" | "4599544" | "4665321" | "4692798" | "4727290" | "4768135" | "4862037" | "4891559" | "4930742" | "4967319" | "5036437" | "5072154" | "5086253" | "5124549" | "5166681" | "5182502" | "5187383" | "5235178" | "5329206" | "5416318" | "5426294" | "5434407" | "5451822" | "5471515" | "5508592" | "5537003" |	US-PGPUB; USPAT; USOCR	OR	ON	2021/10/22 10:18

		"5550677" | "5614788" | "5660454" | "5666028" | "5707129" | "5715093" | "5796094" | "5811888" | "5812321" | "5835613" | "5837994" | "5841126" | "5877897" | "5912534" | "5923027" | "5942853" | "5990469" | "6008486" | "6049171" | "6097023" | "6130421" | "6144158" | "6166698" | "6329925" | "6349782" | "6356376" | "6396397" | "6465962" | "6507779").PN. OR ("6728393").URPN.				
L31	1	(vehicle and headlamp and LED.u/c. and processor and memory and (data with map with road with curvature) and (light with pattern with color with shap$3)).clm.	US-PGPUB; USPAT; USOCR; FPRS; EPO; JPO; DERWENT; IBM_TDB	OR	ON	2021/10/22 10:24
L32	233	("2449338" | "3348095" | "3385998" | "3414763" | "3430100" | "3764816" | "3993914" | "4667129" | "4684819" | "4686423" | "4831310" | "4841199" | "4862036" | "4899083" | "4956562" | "5136209" | "5185558" | "5614788" | "5666028").PN. OR ("5912534").URPN.	US-PGPUB; USPAT; USOCR	OR	ON	2021/10/22 11:33

10/22/2021 11:34:11 AM
C:\Users\tle16\Documents\EAST\Workspaces\17152399.wsp

UNITED STATES PATENT AND TRADEMARK OFFICE

UNITED STATES DEPARTMENT OF COMMERCE
United States Patent and Trademark Office
Address: COMMISSIONER FOR PATENTS
P.O. Box 1450
Alexandria, Virginia 22313-1450
www.uspto.gov

BIB DATA SHEET

CONFIRMATION NO. 6274

SERIAL NUMBER	FILING or 371(c) DATE	CLASS	GROUP ART UNIT	ATTORNEY DOCKET NO.
17/152,399	01/19/2021 RULE	315	2844	TRCH0103PUSP3

APPLICANTS

INVENTORS

Yechezkal Evan Spero, Tifrach, ISRAEL;

**** CONTINUING DATA ****************************

This application is a CON of 15/961,861 04/24/2018 PAT 10894503
which is a CON of 13/357,549 01/24/2012 PAT 9955551
which is a CIP of 10/604,360 07/14/2003 PAT 8100552
which claims benefit of 60/395,308 07/12/2002
and said 13/357,549 01/24/2012
claims benefit of 61/535,981 09/17/2011

**** FOREIGN APPLICATIONS *****************************

**** IF REQUIRED, FOREIGN FILING LICENSE GRANTED ****

02/23/2021

Foreign Priority claimed	❑ Yes ☑ No		STATE OR COUNTRY	SHEETS DRAWINGS	TOTAL CLAIMS	INDEPENDENT CLAIMS
35 USC 119(a-d) conditions met	❑ Yes ☑ No	❑ Met after Allowance				
Verified and Acknowledged	/TUNG X LE/ Examiner's Signature	TXL Initials	ISRAEL	24	33	3

ADDRESS

Brooks Kushman
1000 Town Center
22nd Floor
Southfield, MI 48075
UNITED STATES

TITLE

ADAPTIVE HEADLIGHT SYSTEM

FILING FEE RECEIVED		
3540	FEES: Authority has been given in Paper No._____ to charge/credit DEPOSIT ACCOUNT No._____ for following:	❑ All Fees ❑ 1.16 Fees (Filing) ❑ 1.17 Fees (Processing Ext. of time) ❑ 1.18 Fees (Issue) ❑ Other _____ ❑ Credit

Doc code: IDS
Doc description: Information Disclosure Statement (IDS) Filed

PTO/SB/08a (02-18)
Approved for use through 11/30/2020. OMB 0651-0031
U.S. Patent and Trademark Office; U.S. DEPARTMENT OF COMMERCE
Under the Paperwork Reduction Act of 1995, no persons are required to respond to a collection of information unless it contains a valid OMB control number.

INFORMATION DISCLOSURE STATEMENT BY APPLICANT

(Not for submission under 37 CFR 1.99)

Application Number	17152399
Filing Date	2021-01-19
First Named Inventor	YECHEZKAL EVAN SPERO
Art Unit	2844
Examiner Name	LE, TUNG X
Attorney Docket Number	TRCH0103PUSP3

U.S.PATENTS Remove

Examiner Initial*	Cite No	Patent Number	Kind Code[1]	Issue Date	Name of Patentee or Applicant of cited Document	Pages,Columns,Lines where Relevant Passages or Relevant Figures Appear
	1	3,316,442	A	1967-04-25	Konrad	
	2	4,597,033	A	1986-06-24	Meggs et al.	
	3	5,018,290	A	1991-05-28	Kozek et al.	
	4	5,033,099	A	1991-07-16	Yamada et al.	
	5	5,130,909	A	1992-07-14	Gross	
	6	5,546,475	A	1996-08-13	Bolle et al.	
	7	5,561,346	A	1996-10-01	Byrne	
	8	5,577,832	A	1996-11-26	Lodhie	

INFORMATION DISCLOSURE STATEMENT BY APPLICANT (Not for submission under 37 CFR 1.99)		
	Application Number	17152399
	Filing Date	2021-01-19
	First Named Inventor	YECHEZKAL EVAN SPERO
	Art Unit	2844
	Examiner Name	LE, TUNG X
	Attorney Docket Number	TRCH0103PUSP3

	9	5,749,646	A	1998-05-12	Brittell	
	10	5,785,243	A	1998-07-28	Cross	
	11	5,803,579	A	1998-09-08	Turnbull	
	12	5,921,660	A	1999-07-13	Yu	
	13	5,969,754	A	1999-10-19	Zeman	
	14	5,983,161	A	1999-11-09	Lemelson et al.	
	15	5,994,844	A	1999-11-30	Crawford et al.	
	16	6,046,549	A	2000-04-04	James	
	17	6,149,283	A	2000-11-21	Conway et al.	
	18	6,166,496	A	2000-12-26	Lys et al.	
	19	6,227,679	B1	2001-05-08	Zhang et al.	

INFORMATION DISCLOSURE STATEMENT BY APPLICANT (Not for submission under 37 CFR 1.99)		
	Application Number	17152399
	Filing Date	2021-01-19
	First Named Inventor	YECHEZKAL EVAN SPERO
	Art Unit	2844
	Examiner Name	LE, TUNG X
	Attorney Docket Number	TRCH0103PUSP3

	20	6,281,632	B1	2001-08-28	Stam et al.	
	21	6,340,868	B1	2002-01-22	Lys et al.	
	22	6,346,777	B1	2002-02-12	Kim	
	23	6,379,022	B1	2002-04-30	Amerson et al.	
	24	6,385,352	B1	2002-05-07	Roustaei	
	25	6,394,614	B1	2002-05-28	Chang	
	26	6,406,172	B1	2002-06-18	Harbers et al.	
	27	6,483,439	B1	2002-11-19	Vukosic	
	28	6,498,440	B2	2002-12-24	Stam et al.	
	29	6,499,860	B2	2002-12-31	Begemann	
	30	6,528,954	B1	2003-03-04	Lys et al.	

ALL REFERENCES CONSIDERED EXCEPT WHERE LINED THROUGH. /T.X.L.

INFORMATION DISCLOSURE STATEMENT BY APPLICANT (Not for submission under 37 CFR 1.99)		
	Application Number	17152399
	Filing Date	2021-01-19
	First Named Inventor	YECHEZKAL EVAN SPERO
	Art Unit	2844
	Examiner Name	LE, TUNG X
	Attorney Docket Number	TRCH0103PUSP3

	31	6,601,982	B1	2003-08-05	Begemann et al.	
	32	6,676,282	B2	2004-01-13	Begemann et al.	
	33	6,820,998	B2	2004-11-23	Chen	
	34	7,524,097	B2	2009-04-28	Turnbull et al.	
	35	8,045,760	B2	2011-10-25	Stam et al.	
	36	8,115,394	B2	2012-02-14	Kobayashi	
	37	8,665,079	B2	2014-03-14	Pawlicki et al.	
	38	9,398,270	B2	2016-07-19	Liken et al.	
	39	6,587,573	B1	2003-07-01	Stam et al.	
	40	6,861,809	B2	2005-03-01	Stam	

If you wish to add additional U.S. Patent citation information please click the Add button. Add

U.S.PATENT APPLICATION PUBLICATIONS Remove

ALL REFERENCES CONSIDERED EXCEPT WHERE LINED THROUGH. /T.X.L/

INFORMATION DISCLOSURE STATEMENT BY APPLICANT

(Not for submission under 37 CFR 1.99)

Application Number	17152399
Filing Date	2021-01-19
First Named Inventor	YECHEZKAL EVAN SPERO
Art Unit	2844
Examiner Name	LE, TUNG X
Attorney Docket Number	TRCH0103PUSP3

Examiner Initial*	Cite No	Publication Number	Kind Code[1]	Publication Date	Name of Patentee or Applicant of cited Document	Pages,Columns,Lines where Relevant Passages or Relevant Figures Appear
	1	20010014019	A1	2001-08-16	Begemann	
	2	20020022774	A1	2002-02-21	Kamieli	
	3	20020022927	A1	2002-02-21	Lemelson et al.	
	4	20020039238	A1	2002-04-04	Chang	
	5	20020046100	A1	2002-04-18	Kinjo	
	6	20020047646	A1	2002-04-25	Lys et al.	
	7	20020047628	A1	2002-04-25	Morgan et al.	
	8	20020057340	A1	2002-05-16	Fernandez et al.	
	9	20020130326	A1	2002-09-19	Tamura et al.	
	10	20040052076	A1	2004-03-18	Mueller	

ALL REFERENCES CONSIDERED EXCEPT WHERE LINED THROUGH. /T.X.L/

INFORMATION DISCLOSURE STATEMENT BY APPLICANT (Not for submission under 37 CFR 1.99)		
	Application Number	17152399
	Filing Date	2021-01-19
	First Named Inventor	YECHEZKAL EVAN SPERO
	Art Unit	2844
	Examiner Name	LE, TUNG X
	Attorney Docket Number	TRCH0103PUSP3

	11	20040061605	A1	2004-04-01	Howard	
	12	20040105264	A1	2004-06-03	Spero	
	13	20040138726	A1	2004-07-15	Savage et al.	
	14	20040230358	A1	2004-11-18	Stam et al.	
	15	20060222213	A1	2006-10-05	Kiyohara et al.	
	16	20080136356	A1	2008-06-12	Zampini et al.	
	17	20090315485	A1	2009-12-24	Verfuerth et al.	
	18	20100302779	A1	2010-12-02	Chemel	
	19	20100052550	A1	2010-03-04	Kobayashi	
	20	20110211110	A1	2011-09-01	Doublet	
	21	20120001566	A1	2012-01-05	Josefowicz	

INFORMATION DISCLOSURE STATEMENT BY APPLICANT (Not for submission under 37 CFR 1.99)		
	Application Number	17152399
	Filing Date	2021-01-19
	First Named Inventor	YECHEZKAL EVAN SPERO
	Art Unit	2844
	Examiner Name	LE, TUNG X
	Attorney Docket Number	TRCH0103PUSP3

	22	20120091897	A1	2012-04-19	O et al.	
	23	20120262575	A1	2012-10-18	Champagne	
	24	20120283908	A1	2012-11-08	Schofield et al.	
	25	20120287493	A1	2012-11-15	Kuhlman et al.	
	26	20130258688	A1	2013-10-13	Kalapodas	

If you wish to add additional U.S. Published Application citation information please click the Add button. Add

FOREIGN PATENT DOCUMENTS Remove

Examiner Initial*	Cite No	Foreign Document Number[3]	Country Code[2] i	Kind Code[4]	Publication Date	Name of Patentee or Applicant of cited Document	Pages,Columns,Lines where Relevant Passages or Relevant Figures Appear	T[5]
	1	2001070538	WO	A2	2001-09-27	Stam et al.		

If you wish to add additional Foreign Patent Document citation information please click the Add button Add

NON-PATENT LITERATURE DOCUMENTS Remove

Examiner Initials*	Cite No	Include name of the author (in CAPITAL LETTERS), title of the article (when appropriate), title of the item (book, magazine, journal, serial, symposium, catalog, etc), date, pages(s), volume-issue number(s), publisher, city and/or country where published.	T[5]
	1		

If you wish to add additional non-patent literature document citation information please click the Add button Add

INFORMATION DISCLOSURE STATEMENT BY APPLICANT (Not for submission under 37 CFR 1.99)		
	Application Number	17152399
	Filing Date	2021-01-19
	First Named Inventor	YECHEZKAL EVAN SPERO
	Art Unit	2844
	Examiner Name	LE, TUNG X
	Attorney Docket Number	TRCH0103PUSP3

EXAMINER SIGNATURE			
Examiner Signature	/TUNG X LE/	Date Considered	10/22/2021

*EXAMINER: Initial if reference considered, whether or not citation is in conformance with MPEP 609. Draw line through a citation if not in conformance and not considered. Include copy of this form with next communication to applicant.

[1] See Kind Codes of USPTO Patent Documents at www.USPTO.GOV or MPEP 901.04. [2] Enter office that issued the document, by the two-letter code (WIPO Standard ST.3). [3] For Japanese patent documents, the indication of the year of the reign of the Emperor must precede the serial number of the patent document. [4] Kind of document by the appropriate symbols as indicated on the document under WIPO Standard ST.16 if possible. [5] Applicant is to place a check mark here if English language translation is attached.

ALL REFERENCES CONSIDERED EXCEPT WHERE LINED THROUGH. /T.X.L/

INFORMATION DISCLOSURE STATEMENT BY APPLICANT

(Not for submission under 37 CFR 1.99)

Application Number	17152399
Filing Date	2021-01-19
First Named Inventor	YECHEZKAL EVAN SPERO
Art Unit	2844
Examiner Name	LE, TUNG X
Attorney Docket Number	TRCH0103PUSP3

CERTIFICATION STATEMENT

Please see 37 CFR 1.97 and 1.98 to make the appropriate selection(s):

That each item of information contained in the information disclosure statement was first cited in any communication from a foreign patent office in a counterpart foreign application not more than three months prior to the filing of the information disclosure statement. See 37 CFR 1.97(e)(1).

OR

☐ That no item of information contained in the information disclosure statement was cited in a communication from a foreign patent office in a counterpart foreign application, and, to the knowledge of the person signing the certification after making reasonable inquiry, no item of information contained in the information disclosure statement was known to any individual designated in 37 CFR 1.56(c) more than three months prior to the filing of the information disclosure statement. See 37 CFR 1.97(e)(2).

See attached certification statement.

X The fee set forth in 37 CFR 1.17 (p) has been submitted herewith.

X A certification statement is not submitted herewith.

SIGNATURE

A signature of the applicant or representative is required in accordance with CFR 1.33, 10.18. Please see CFR 1.4(d) for the form of the signature.

Signature	/Bernard P. Tomsa/	Date (YYYY-MM-DD)	2021-07-07
Name/Print	Bernard P. Tomsa	Registration Number	60,121

This collection of information is required by 37 CFR 1.97 and 1.98. The information is required to obtain or retain a benefit by the public which is to file (and by the USPTO to process) an application. Confidentiality is governed by 35 U.S.C. 122 and 37 CFR 1.14. This collection is estimated to take 1 hour to complete, including gathering, preparing and submitting the completed application form to the USPTO. Time will vary depending upon the individual case. Any comments on the amount of time you require to complete this form and/or suggestions for reducing this burden, should be sent to the Chief Information Officer, U.S. Patent and Trademark Office, U.S. Department of Commerce, P.O. Box 1450, Alexandria, VA 22313-1450. DO NOT SEND FEES OR COMPLETED FORMS TO THIS ADDRESS. **SEND TO: Commissioner for Patents, P.O. Box 1450, Alexandria, VA 22313-1450.**

ALL REFERENCES CONSIDERED EXCEPT WHERE LINED THROUGH. /T.X.L/

Privacy Act Statement

The Privacy Act of 1974 (P.L. 93-579) requires that you be given certain information in connection with your submission of the attached form related to a patent application or patent. Accordingly, pursuant to the requirements of the Act, please be advised that: (1) the general authority for the collection of this information is 35 U.S.C. 2(b)(2); (2) furnishing of the information solicited is voluntary; and (3) the principal purpose for which the information is used by the U.S. Patent and Trademark Office is to process and/or examine your submission related to a patent application or patent. If you do not furnish the requested information, the U.S. Patent and Trademark Office may not be able to process and/or examine your submission, which may result in termination of proceedings or abandonment of the application or expiration of the patent.

The information provided by you in this form will be subject to the following routine uses:

1. The information on this form will be treated confidentially to the extent allowed under the Freedom of Information Act (5 U.S.C. 552) and the Privacy Act (5 U.S.C. 552a). Records from this system of records may be disclosed to the Department of Justice to determine whether the Freedom of Information Act requires disclosure of these record s.

2. A record from this system of records may be disclosed, as a routine use, in the course of presenting evidence to a court, magistrate, or administrative tribunal, including disclosures to opposing counsel in the course of settlement negotiations.

3. A record in this system of records may be disclosed, as a routine use, to a Member of Congress submitting a request involving an individual, to whom the record pertains, when the individual has requested assistance from the Member with respect to the subject matter of the record.

4. A record in this system of records may be disclosed, as a routine use, to a contractor of the Agency having need for the information in order to perform a contract. Recipients of information shall be required to comply with the requirements of the Privacy Act of 1974, as amended, pursuant to 5 U.S.C. 552a(m).

5. A record related to an International Application filed under the Patent Cooperation Treaty in this system of records may be disclosed, as a routine use, to the International Bureau of the World Intellectual Property Organization, pursuant to the Patent Cooperation Treaty.

6. A record in this system of records may be disclosed, as a routine use, to another federal agency for purposes of National Security review (35 U.S.C. 181) and for review pursuant to the Atomic Energy Act (42 U.S.C. 218(c)).

7. A record from this system of records may be disclosed, as a routine use, to the Administrator, General Services, or his/her designee, during an inspection of records conducted by GSA as part of that agency's responsibility to recommend improvements in records management practices and programs, under authority of 44 U.S.C. 2904 and 2906. Such disclosure shall be made in accordance with the GSA regulations governing inspection of records for this purpose, and any other relevant (i.e., GSA or Commerce) directive. Such disclosure shall not be used to make determinations about individuals.

8. A record from this system of records may be disclosed, as a routine use, to the public after either publication of the application pursuant to 35 U.S.C. 122(b) or issuance of a patent pursuant to 35 U.S.C. 151. Further, a record may be disclosed, subject to the limitations of 37 CFR 1.14, as a routine use, to the public if the record was filed in an application which became abandoned or in which the proceedings were terminated and which application is referenced by either a published application, an application open to public inspections or an issued patent.

9. A record from this system of records may be disclosed, as a routine use, to a Federal, State, or local law enforcement agency, if the USPTO becomes aware of a violation or potential violation of law or regulation.

IN THE UNITED STATES PATENT AND TRADEMARK OFFICE

In re application of:

YECHEZKAL EVAN SPERO

Group Art Unit: 2844

Examiner: LE, TUNG X.

Serial No.: 17/152,399

Filed: January 19, 2021

For: ADAPTIVE HEADLIGHT SYSTEM

Attorney Docket No.: TRCH0103PUSP3

AMENDMENT AFTER ALLOWANCE
UNDER 37 C.F.R. § 1.312

Mail Stop Issue Fee
Commissioner for Patents
U.S. Patent and Trademark Office
P.O. Box 1450
Alexandria, VA 22313-1450

Commissioner:

Please amend the above-identified application as follows:

Amendments to the Specification:

Please amend numbered paragraph [0001], as shown below:

CROSS-REFERENCE TO RELATED APPLICATIONS

[0001] This application is a Continuation of pending U.S. patent application Ser. No. 15/961,861 filed Apr. 24, 2018, now U.S. Patent No. 10,894,503 which issued January 19, 2021 which is a Continuation of U.S. patent application Ser. No. 13/357,549 filed Jan. 24, 2012, now U.S. Patent No. 9,955,551 which issued Apr. 24, 2018, which is a Continuation-in-Part of U.S. patent application Ser. No. 10/604,360, entitled "Multiple Light-Source Illuminating System" filed on Jul. 14, 2003, now U.S. Patent No. 8,100,552 which issued on Jan. 24, 2012, which claims benefit under 35 U.S.C., § 119(e) of U.S. Provisional Application No. 60/395,308 filed Jul. 12, 2002, entitled "Multiple Light Source Illumination System". U.S. patent application Ser. No. ~~13,357,549~~ 13/357,549 filed Jan. 24, 2012, also claims benefit of U.S. Provisional Application No. 61/535,981 filed Sept. 17, 2011 entitled "Adjustable Light Fixture". The entire content of the disclosures are all expressly incorporated herein by reference.

Remarks

In this amendment, Applicant has amended paragraph [0001] Cross-Reference to Related Applications to correct a typographical error. No new matter has been added. Please charge any fees or credit any overpayments as a result of the filing of this paper to our Deposit Account No. 02-3978.

Respectfully submitted,

YECHEZKAL EVAN SPERO

By: /Bernard P. Tomsa/
Bernard P. Tomsa
Reg. No. 60,121
Attorney for Applicant

Date: November 10, 2021

BROOKS KUSHMAN P.C.
1000 Town Center, 22nd Floor
Southfield, MI 48075-1238
Phone: 248-358-4400
Fax: 248-358-3351

PART B - FEE(S) TRANSMITTAL

Complete and send this form, together with applicable fee(s), by mail or fax, or via EFS-Web.

By mail, send to: Mail Stop ISSUE FEE
Commissioner for Patents
P.O. Box 1450
Alexandria, Virginia 22313-1450

By fax, send to: (571)-273-2885

INSTRUCTIONS: This form should be used for transmitting the ISSUE FEE and PUBLICATION FEE (if required). Blocks 1 through 5 should be completed where appropriate. All further correspondence including the Patent, advance orders and notification of maintenance fees will be mailed to the current correspondence address as indicated unless corrected below or directed otherwise in Block 1, by (a) specifying a new correspondence address; and/or (b) indicating a separate "FEE ADDRESS" for maintenance fee notifications.

CURRENT CORRESPONDENCE ADDRESS (Note: Use Block 1 for any change of address)

22045 7590 11/08/2021
Brooks Kushman
1000 Town Center
22nd Floor
Southfield, MI 48075

Note: A certificate of mailing can only be used for domestic mailings of the Fee(s) Transmittal. This certificate cannot be used for any other accompanying papers. Each additional paper, such as an assignment or formal drawing, must have its own certificate of mailing or transmission.

Certificate of Mailing or Transmission

I hereby certify that this Fee(s) Transmittal is being deposited with the United States Postal Service with sufficient postage for first class mail in an envelope addressed to the Mail Stop ISSUE FEE address above, or being transmitted to the USPTO via EFS-Web or by facsimile to (571) 273-2885, on the date below.

Bernard P. Tomsa	(Typed or printed name)
/Bernard P. Tomsa/	(Signature)
November 10, 2021	(Date)

APPLICATION NO.	FILING DATE	FIRST NAMED INVENTOR	ATTORNEY DOCKET NO.	CONFIRMATION NO.
17/152,399	01/19/2021	Yechezkal Evan Spero	TRCH0103PUSP3	6274

TITLE OF INVENTION: ADAPTIVE HEADLIGHT SYSTEM

APPL.N. TYPE	ENTITY STATUS	ISSUE FEE DUE	PUBLICATION FEE DUE	PREV. PAID ISSUE FEE	TOTAL FEE(S) DUE	DATE DUE
nonprovisional	UNDISCOUNTED	$1200	$0.00	$0.00	$1200	02/08/2022

EXAMINER	ART UNIT	CLASS-SUBCLASS
LE, TUNG X	2844	315-152000

1. Change of correspondence address or indication of "Fee Address" (37 CFR 1.363).

☐ Change of correspondence address (or Change of Correspondence Address form PTO/SB/122) attached.

☐ "Fee Address" indication (or "Fee Address" Indication form PTO/SB/47; Rev 03-09 or more recent) attached. **Use of a Customer Number is required.**

2. For printing on the patent front page, list
(1) The names of up to 3 registered patent attorneys or agents OR, alternatively,
(2) The name of a single firm (having as a member a registered attorney or agent) and the names of up to 2 registered patent attorneys or agents. If no name is listed, no name will be printed.

1 Brooks Kushman P.C.
2
3

3. ASSIGNEE NAME AND RESIDENCE DATA TO BE PRINTED ON THE PATENT (print or type)

PLEASE NOTE: Unless an assignee is identified below, no assignee data will appear on the patent. If an assignee is identified below, the document must have been previously recorded, or filed for recordation, as set forth in 37 CFR 3.11 and 37 CFR 3.81(a). Completion of this form is NOT a substitute for filing an assignment.

(A) NAME OF ASSIGNEE (B) RESIDENCE: (CITY and STATE OR COUNTRY)

Please check the appropriate assignee category or categories (will not be printed on the patent) : ☐ Individual ☐ Corporation or other private group entity ☐ Government

4a. Fees submitted: ☒ Issue Fee ☐ Publication Fee (if required) ☐ Advance Order - # of Copies _____

4b. Method of Payment: *(Please first reapply any previously paid fee shown above)*

☒ Electronic Payment via EFS-Web ☐ Enclosed check ☐ Non-electronic payment by credit card (Attach form PTO-2038)

☒ The Director is hereby authorized to charge the required fee(s), any deficiency, or credit any overpayment to Deposit Account No. 02-3978

5. **Change in Entity Status** (from status indicated above)

☐ Applicant certifying micro entity status. See 37 CFR 1.29

☐ Applicant asserting small entity status. See 37 CFR 1.27

☐ Applicant changing to regular undiscounted fee status.

NOTE: Absent a valid certification of Micro Entity Status (see forms PTO/SB/15A and 15B), issue fee payment in the micro entity amount will not be accepted at the risk of application abandonment.
NOTE: If the application was previously under micro entity status, checking this box will be taken to be a notification of loss of entitlement to micro entity status.
NOTE: Checking this box will be taken to be a notification of loss of entitlement to small or micro entity status, as applicable.

NOTE: This form must be signed in accordance with 37 CFR 1.31 and 1.33. See 37 CFR 1.4 for signature requirements and certifications.

Authorized Signature /Bernard P. Tomsa/ Date November 10, 2021

Typed or printed name Bernard P. Tomsa Registration No. 60,121

Electronic Patent Application Fee Transmittal

Application Number:	17152399
Filing Date:	19-Jan-2021
Title of Invention:	ADAPTIVE HEADLIGHT SYSTEM
First Named Inventor/Applicant Name:	Yechezkal Evan Spero
Filer:	Bernard Patrick Tomsa/Claire Flood
Attorney Docket Number:	TRCH0103PUSP3

Filed as Large Entity

Filing Fees for Utility under 35 USC 111(a)

Description	Fee Code	Quantity	Amount	Sub-Total in USD($)
Basic Filing:				
Pages:				
Claims:				
Miscellaneous-Filing:				
Petition:				
Patent-Appeals-and-Interference:				
Post-Allowance-and-Post-Issuance:				
UTILITY APPL ISSUE FEE	1501	1	1200	1200

Description	Fee Code	Quantity	Amount	Sub-Total in USD($)
Extension-of-Time:				
Miscellaneous:				
			Total in USD ($)	**1200**

Electronic Acknowledgement Receipt

EFS ID:	44251972
Application Number:	17152399
International Application Number:	
Confirmation Number:	6274
Title of Invention:	ADAPTIVE HEADLIGHT SYSTEM
First Named Inventor/Applicant Name:	Yechezkal Evan Spero
Customer Number:	22045
Filer:	Bernard Patrick Tomsa/Claire Flood
Filer Authorized By:	Bernard Patrick Tomsa
Attorney Docket Number:	TRCH0103PUSP3
Receipt Date:	10-NOV-2021
Filing Date:	19-JAN-2021
Time Stamp:	16:51:06
Application Type:	Utility under 35 USC 111(a)

Payment information:

Submitted with Payment	yes
Payment Type	DA
Payment was successfully received in RAM	$1200
RAM confirmation Number	E2021A0G53074522
Deposit Account	
Authorized User	

The Director of the USPTO is hereby authorized to charge indicated fees and credit any overpayment as follows:

File Listing:

Document Number	Document Description	File Name	File Size(Bytes)/ Message Digest	Multi Part /.zip	Pages (if appl.)
1	Miscellaneous Incoming Letter	TRCH0103PUSP3_Comments_on_Reasons_for_Allowance.PDF	81388 2cd98ac4910d23c021de9b3658203d4bcade5a73	no	2
Warnings:					
Information:					
2		TRCH0103PUSP3_Amendment_After_Allowance.pdf	124330 f404448c52ec5d7932e9b815b746d42a2df9cbc4	yes	3
	Multipart Description/PDF files in .zip description				
	Document Description		**Start**	**End**	
	Amendment after Notice of Allowance (Rule 312)		1	1	
	Specification		2	2	
	Applicant Arguments/Remarks Made in an Amendment		3	3	
Warnings:					
Information:					
3	Issue Fee Payment (PTO-85B)	TRCH0103PUSP3_Issue_Fee_Transmittal.PDF	626735 a8b3d04d9ead03b987f1336e5ef22f7f0d009d1f	no	1
Warnings:					
Information:					
4	Fee Worksheet (SB06)	fee-info.pdf	37785 a65d4f8db13dc3184061a9cf506c7a1e239c0339	no	2
Warnings:					
Information:					
		Total Files Size (in bytes):	870238		

This Acknowledgement Receipt evidences receipt on the noted date by the USPTO of the indicated documents, characterized by the applicant, and including page counts, where applicable. It serves as evidence of receipt similar to a Post Card, as described in MPEP 503.

New Applications Under 35 U.S.C. 111
If a new application is being filed and the application includes the necessary components for a filing date (see 37 CFR 1.53(b)-(d) and MPEP 506), a Filing Receipt (37 CFR 1.54) will be issued in due course and the date shown on this Acknowledgement Receipt will establish the filing date of the application.
National Stage of an International Application under 35 U.S.C. 371
If a timely submission to enter the national stage of an international application is compliant with the conditions of 35 U.S.C. 371 and other applicable requirements a Form PCT/DO/EO/903 indicating acceptance of the application as a national stage submission under 35 U.S.C. 371 will be issued in addition to the Filing Receipt, in due course.
New International Application Filed with the USPTO as a Receiving Office
If a new international application is being filed and the international application includes the necessary components for an international filing date (see PCT Article 11 and MPEP 1810), a Notification of the International Application Number and of the International Filing Date (Form PCT/RO/105) will be issued in due course, subject to prescriptions concerning national security, and the date shown on this Acknowledgement Receipt will establish the international filing date of the application.

IN THE UNITED STATES PATENT AND TRADEMARK OFFICE

In re application of:

YECHEZKAL EVAN SPERO

Group Art Unit: 2844

Examiner: LE, TUNG X

Serial No.: 17/152,399

Filed: January 19, 2021

For: ADAPTIVE HEADLIGHT SYSTEM

Attorney Docket No.: TRCH0103PUSP3

COMMENTS ON STATEMENT OF REASONS FOR ALLOWANCE

Mail Stop Issue Fee
Commissioner for Patents
U.S. Patent and Trademark Office
P.O. Box 1450
Alexandria, VA 22313-1450

Commissioner:

In response to the Examiner's Statement of Reasons for Allowance contained in the Notice of Allowance mailed November 8, 2021, Applicant submits the following comments:

Remarks

Applicant thanks the Examiner for the allowance of the indicated claims, and while Applicant agrees that the claims are allowable over the prior art, Applicant notes that the reasons listed for allowance are not necessarily the exclusive reasons for allowance, and instead represent sufficient reasons for allowance. Accordingly, Applicant reserves all future rights to take any position that the claims are allowable for a variety of additional and/or alternative reasons if any of the claims should come under scrutiny for any reason, if anyone questions the present reasons for allowance, and/or for any other reasonable and necessary purpose as determined by Applicant.

Respectfully submitted,

YECHEZKAL EVAN SPERO

By: /Bernard P. Tomsa/
Bernard P. Tomsa
Reg. No. 60,121
Attorney for Applicant

Date: November 10, 2021

BROOKS KUSHMAN P.C.
1000 Town Center, 22nd Floor
Southfield, MI 48075-1238
Phone: 248-358-4400
Fax: 248-358-3351

UNITED STATES PATENT AND TRADEMARK OFFICE

UNITED STATES DEPARTMENT OF COMMERCE
United States Patent and Trademark Office
Address: COMMISSIONER FOR PATENTS
P.O. Box 1450
Alexandria, Virginia 22313-1450
www.uspto.gov

APPLICATION NO.	FILING DATE	FIRST NAMED INVENTOR	ATTORNEY DOCKET NO.	CONFIRMATION NO.
17/152,399	01/19/2021	Yechezkal Evan Spero	TRCH0103PUSP3	6274

22045 7590 11/26/2021
Brooks Kushman
1000 Town Center
22nd Floor
Southfield, MI 48075

EXAMINER
LE, TUNG X

ART UNIT	PAPER NUMBER
2844	

NOTIFICATION DATE	DELIVERY MODE
11/26/2021	ELECTRONIC

Please find below and/or attached an Office communication concerning this application or proceeding.

The time period for reply, if any, is set in the attached communication.

Notice of the Office communication was sent electronically on above-indicated "Notification Date" to the following e-mail address(es):

docketing@brookskushman.com
kdilucia@brookskushman.com

Response to Rule 312 Communication	Application No.	Applicant(s)	
	17/152,399	Spero, Yechezkal Evan	
	Examiner	Art Unit	AIA (FITF) Status
	TUNG X LE	2844	No

-- The MAILING DATE of this communication appears on the cover sheet with the correspondence address --

1. ☑ The amendment filed on 10 November 2021 under 37 CFR 1.312 has been considered, and has been:
   a) ☑ entered.
   b) ☐ entered as directed to matters of form not affecting the scope of the invention.
   c) ☐ disapproved because the amendment was filed after the payment of the issue fee.
   Any amendment filed after the date the issue fee is paid must be accompanied by a petition under 37 CFR 1.313(c)(1) and the required fee to withdraw the application from issue.
   d) ☐ disapproved. See explanation below.
   e) ☐ entered in part. See explanation below.

Applicant's amendment to specification in paragraph [0001] has been entered.

/TUNG X LE/
Primary Examiner, Art Unit 2844

OK TO ENTER: /T.X.L/ 11/17/2021

IN THE UNITED STATES PATENT AND TRADEMARK OFFICE

In re application of:

YECHEZKAL EVAN SPERO

Group Art Unit: 2844

Examiner: LE, TUNG X.

Serial No.: 17/152,399

Filed: January 19, 2021

For: ADAPTIVE HEADLIGHT SYSTEM

Attorney Docket No.: TRCH0103PUSP3

AMENDMENT AFTER ALLOWANCE
UNDER 37 C.F.R. § 1.312

Mail Stop Issue Fee
Commissioner for Patents
U.S. Patent and Trademark Office
P.O. Box 1450
Alexandria, VA 22313-1450

Commissioner:

Please amend the above-identified application as follows:

UNITED STATES PATENT AND TRADEMARK OFFICE

UNITED STATES DEPARTMENT OF COMMERCE
United States Patent and Trademark Office
Address: COMMISSIONER FOR PATENTS
P.O. Box 1450
Alexandria, Virginia 22313-1450
www.uspto.gov

APPLICATION NO.	ISSUE DATE	PATENT NO.	ATTORNEY DOCKET NO.	CONFIRMATION NO.
17/152,399	12/28/2021	11208029	TRCH0103PUSP3	6274

22045 7590 12/08/2021

Brooks Kushman
1000 Town Center
22nd Floor
Southfield, MI 48075

ISSUE NOTIFICATION

The projected patent number and issue date are specified above.

Determination of Patent Term Adjustment under 35 U.S.C. 154 (b)
(application filed on or after May 29, 2000)

The Patent Term Adjustment is 0 day(s). Any patent to issue from the above-identified application will include an indication of the adjustment on the front page.

If a Continued Prosecution Application (CPA) was filed in the above-identified application, the filing date that determines Patent Term Adjustment is the filing date of the most recent CPA.

Applicant will be able to obtain more detailed information by accessing the Patent Application Information Retrieval (PAIR) WEB site (http://pair.uspto.gov).

Any questions regarding the Patent Term Extension or Adjustment determination should be directed to the Office of Patent Legal Administration at (571)-272-7702. Questions relating to issue and publication fee payments should be directed to the Application Assistance Unit (AAU) of the Office of Data Management (ODM) at (571)-272-4200.

INVENTOR(s) (Please see PAIR WEB site http://pair.uspto.gov for additional inventors):

Yechezkal Evan Spero, Tifrach, ISRAEL;

APPLICANT(s) (Please see PAIR WEB site http://pair.uspto.gov for additional applicants):

The United States represents the largest, most dynamic marketplace in the world and is an unparalleled location for business investment, innovation, and commercialization of new technologies. The USA offers tremendous resources and advantages for those who invest and manufacture goods here. Through SelectUSA, our nation works to encourage and facilitate business investment. To learn more about why the USA is the best country in the world to develop technology, manufacture products, and grow your business, visit SelectUSA.gov.

AO 120 (Rev. 08/10)

TO: Mail Stop 8 Director of the U.S. Patent and Trademark Office P.O. Box 1450 Alexandria, VA 22313-1450	REPORT ON THE FILING OR DETERMINATION OF AN ACTION REGARDING A PATENT OR TRADEMARK

In Compliance with 35 U.S.C. § 290 and/or 15 U.S.C. § 1116 you are hereby advised that a court action has been filed in the U.S. District Court for the District of Delaware on the following

☐ Trademarks or ☑ Patents. (☐ the patent action involves 35 U.S.C. § 292.):

DOCKET NO.	DATE FILED	U.S. DISTRICT COURT
	6/7/2022	for the District of Delaware

PLAINTIFF	DEFENDANT
Torchlight Technologies LLC	Daimler AG, et al

PATENT OR TRADEMARK NO.	DATE OF PATENT OR TRADEMARK	HOLDER OF PATENT OR TRADEMARK
1 9,955,551	4/24/2018	Yechezkal Evan Spero
2 10,894,503	1/19/2021	Yechezkal Evan Spero
3 11,208,029	12/28/2021	Yechezkal Evan Spero
4		
5		

In the above—entitled case, the following patent(s)/ trademark(s) have been included:

DATE INCLUDED	INCLUDED BY ☐ Amendment ☐ Answer ☐ Cross Bill ☐ Other Pleading	
PATENT OR TRADEMARK NO.	DATE OF PATENT OR TRADEMARK	HOLDER OF PATENT OR TRADEMARK
1		
2		
3		
4		
5		

In the above—entitled case, the following decision has been rendered or judgement issued:

DECISION/JUDGEMENT

CLERK	(BY) DEPUTY CLERK	DATE

Copy 1—Upon initiation of action, mail this copy to Director Copy 3—Upon termination of action, mail this copy to Director
Copy 2—Upon filing document adding patent(s), mail this copy to Director Copy 4—Case file copy

AO 120 (Rev. 08/10)

TO:	Mail Stop 8 Director of the U.S. Patent and Trademark Office P.O. Box 1450 Alexandria, VA 22313-1450	REPORT ON THE FILING OR DETERMINATION OF AN ACTION REGARDING A PATENT OR TRADEMARK

In Compliance with 35 U.S.C. § 290 and/or 15 U.S.C. § 1116 you are hereby advised that a court action has been filed in the U.S. District Court for the District of Delaware on the following

☐ Trademarks or ☑ Patents. (☐ the patent action involves 35 U.S.C. § 292.):

DOCKET NO.	DATE FILED	U.S. DISTRICT COURT for the District of Delaware
PLAINTIFF Torchlight Technologies LLC		DEFENDANT General Motors LLC, General Motors Holdings LLC, and General Motors Company

	PATENT OR TRADEMARK NO.	DATE OF PATENT OR TRADEMARK	HOLDER OF PATENT OR TRADEMARK
1	9,955,551	4/24/2018	Yechezkal Evan Spero
2	10,894,503	1/19/2021	Yechezkal Evan Spero
3	11,208,029	12/28/2021	Yechezkal Evan Spero
4			
5			

In the above—entitled case, the following patent(s)/ trademark(s) have been included:

DATE INCLUDED	INCLUDED BY ☐ Amendment ☐ Answer ☐ Cross Bill ☐ Other Pleading	
PATENT OR TRADEMARK NO.	DATE OF PATENT OR TRADEMARK	HOLDER OF PATENT OR TRADEMARK
1		
2		
3		
4		
5		

In the above—entitled case, the following decision has been rendered or judgement issued:

DECISION/JUDGEMENT

CLERK	(BY) DEPUTY CLERK	DATE

Copy 1—Upon initiation of action, mail this copy to Director **Copy 3—Upon termination of action, mail this copy to Director**
Copy 2—Upon filing document adding patent(s), mail this copy to Director **Copy 4—Case file copy**

Trials@uspto.gov
571-272-7822

Paper 15
Entered: May 4, 2023

UNITED STATES PATENT AND TRADEMARK OFFICE

BEFORE THE PATENT TRIAL AND APPEAL BOARD

UNIFIED PATENTS, LLC,
Petitioner,

v.

TORCHLIGHT TECHNOLOGIES LLC,
Patent Owner.

IPR2022-01500
Patent 11,208,029 B2

Before JON M. JURGOVAN, JASON W. MELVIN, and AARON W. MOORE, *Administrative Patent Judges*.

MELVIN, *Administrative Patent Judge*.

DECISION
Granting Institution of *Inter Partes* Review
35 U.S.C. § 314

I. INTRODUCTION

Unified Patents, LLC ("Petitioner") filed a Petition (Paper 1, "Pet.") requesting *inter partes* review of claims 1, 2, 10–13, 23, and 24 of U.S. Patent No. 11,208,029 B2 (Ex. 1001, "the '029 patent"). Torchlight Technologies LLC ("Patent Owner") filed a Preliminary Response. Paper 8 ("Prelim. Resp."). Pursuant to 35 U.S.C. § 314 and 37 C.F.R. § 42.4(a), we have authority to determine whether to institute review.

An *inter partes* review may not be instituted unless "the information presented in the petition . . . and any response . . . shows that there is a reasonable likelihood that the petitioner would prevail with respect to at least 1 of the claims challenged in the petition." 35 U.S.C. § 314(a). For the reasons set forth below, we conclude that Petitioner has shown a reasonable likelihood it will prevail in establishing the unpatentability of at least one challenged claim, and we institute *inter partes* review.

A. Real Parties in Interest

Petitioner identifies itself as the real party in interest. Pet. 1. Patent Owner also identifies itself as the real party in interest, noting that it is the exclusive licensee of the '029 patent, which is owned by Yechezkal Evan Spero. Paper 6, 1 (Patent Owner's Mandatory Notices). Patent Owner challenges Petitioner's identification, and we discuss that challenge below. *See infra* at 16 (§§ II.E, II.F).

B. Related Matters

The parties identify the following related litigation: *Torchlight Technologies LLC v. Daimler AG et al.*, No. 1:22-cv-00751 (D. Del); *Torchlight Technologies LLC v. General Motors LLC et al.*, No. 1:22-cv-

00752 (D. Del.). Pet. 2; Paper 6, 1. Patent Owner additionally identifies *Volkswagen Group of America, Inc. v. Yechezkal Evan Spero*, IPR2022-01586 (PTAB October 3, 2022). Paper 6, 1.

C. THE '029 PATENT

The '029 patent is titled "Adaptive Headlight System" and relates to motor vehicle headlamps with LED light sources and a processor to control the headlamp light pattern. Ex. 1001, codes (54), (57). The specification more generally describes a lighting device that "incorporates one or more discrete light sources and their ancillary optical and electrical control equipment in an integrated illuminating element." *Id.* at 13:34–36. The combined unit is referred to as a Digital Lighting Fixture (DLF). *Id.* at 18:29–33.

The specification further describes transportation vehicle applications. *Id.* at 50:49–57:35. One such application involves a DLF headlamp device that includes a cluster of LEDs to illuminate around a corner. *Id.* at 51:54–63, 54:8–15. With LEDs having a variety of aims, the headlamp's light distribution pattern may be controlled based on a number of factors, including location data from a GPS system, providing information about upcoming curves in the road. *See id.* at 51:54–67, 54:15–22.

D. CHALLENGED CLAIMS

Challenged claim 1 is independent and is reproduced below:

1. A system, for a motor vehicle, comprising:

   a plurality of headlamps, each comprising a plurality of LED light sources;

   one or more processors; and

> a memory storing instructions that, when executed by one or more of the one or more processors, enable the one or more processors to:
>
> receive first data, including at least map data, indicating a road curvature upcoming along a road on which the motor vehicle is traveling;
>
> determine a light change, the change adapting a light pattern of the headlamps in at least one of color, intensity or spatial distribution to increase light in a direction of the road curvature ahead of the motor vehicle and shaping light based at least in part on the road curvature; and
>
> control at least a first plurality of the LED light sources to provide light based at least in part on the determined light change and prior to the motor vehicle reaching the road curvature.

Id. at 95:56–96:8. Claims 2, 10, and 11 depend, directly or indirectly, from claim 1. *Id.* at 96:9–11, 97:39–44. Claim 12 is independent and recites limitations similar to claim 1's. *Id.* at 97:45–62. Claim 13 depends from claim 12. *Id.* at 97:63–65. Claim 23 is independent and recites limitations similar to claim 1's. *Id.* at 99:28–43. Claim 24 depends from claim 23. *Id.* at 99:44–46.

E. Prior Art and Asserted Grounds

Petitioner asserts the following ground of unpatentability:

Claim(s) Challenged	35 U.S.C. §	Reference(s)/Basis
1, 2, 12, 13, 23, 24	103	Gotou[1], Harbers[2]

[1] US 5,588,733; filed June 7, 1995, issued Dec. 31, 1996 (Ex. 1003).
[2] US 6,406,172 B1; filed June 22, 2000, issued June 18, 2002 (Ex. 1004).

Claim(s) Challenged	35 U.S.C. §	Reference(s)/Basis
1, 2, 10–13, 23, 24	103	Heinz[3], Gotou
1, 2, 10–13, 23, 24	103	Heinz, Gotou, Harbers

Pet. 6. Petitioner also relies on the Declaration of Mr. A. Brent York. Ex. 1002.

II. ANALYSIS

A. LEVEL OF ORDINARY SKILL IN THE ART

Petitioner asserts that ordinarily skilled artisans "would have had at least a bachelor's degree in physics, engineering physics, mechanical engineering, electrical engineering, or a related field, and at least two years of work experience in transportation lighting." Pet. 14 (citing Ex. 1002 ¶¶ 32–35). Patent Owner "disputes Unified's proposed level of ordinary skill" and proposes that skilled artisans:

> would have had a Master's of Science Degree (or a similar technical Master's Degree, or higher degree) in an academic area emphasizing electrical engineering, computer engineering, or computer science with experience or education in optics and imaging systems or, alternatively, a Bachelor's Degree (or higher degree) in an academic area emphasizing electrical, computer engineering or computer science and having two or more years of experience in the field of optical and imaging systems.

Prelim. Resp. 16. Patent Owner, however, does not explain the significance of the differing levels of ordinary skill proposed. To the extent Patent Owner

[3] German Patent DE 199 23 187 C2, issued May 3, 2001 (Ex. 1006 (certified translation); Ex. 1007 (original)).

believes the level of ordinary skill affects this proceeding, it should explain that in the instituted trial.

B. Claim Construction

The parties agree that no express claim construction is required at this stage. Pet. 14; Prelim. Resp. 16. We therefore do not construe the claims for this decision. *Realtime Data, LLC v. Iancu*, 912 F.3d 1368, 1375 (Fed. Cir. 2019) ("The Board is required to construe 'only those terms . . . that are in controversy, and only to the extent necessary to resolve the controversy.'") (quoting *Vivid Techs., Inc. v. Am. Sci. & Eng'g, Inc.*, 200 F.3d 795, 803 (Fed. Cir. 1999)).

To the extent the scope of a particular claim term impacts a party's argument during trial, the party should propose an express construction and show how the record supports it.

C. Obviousness over Gotou and Harbers

Gotou is titled "Head Lamp Device for Vehicle" and is directed to a vehicle headlamp with a left-right adjustable lighting region. Ex. 1003, codes (54), (57). Gotou's device may adjust the lighting region based on a number of factors, including "direction indicating signal, steering angle signal, map information and information of the present position." *Id.* at 2:5–7. Gotou describes a "light distributing control ECU 10" that receives information from a variety of sensors and "processes the information[] and signals to determine a requisite optical axis angle θ." *Id.* at 3:52–63. Gotou's system uses the optical axis angle to control a motor driver that aims the lamp unit. *Id.* at 3:24–45, 3:63–67. Gotou describes that its controller generates "a curve pre-noticing signal" from map information and adjusts

the optical axis angle "when the vehicle reaches the predetermined distance S before the curve entrance and the light distribution is deflected leftward at a proper timing before the curve." *Id.* at 7:32–43.

Harbers is titled "Headlamp and Dynamic Lighting System for Vehicles" and is directed to a vehicle headlamp comprising multiple lighting elements (preferably LEDs) that can be switched on and off to adjust the spatial distribution of the headlamp's light beam. Ex. 1004, codes (54), (57), 2:9–12. Harbers describes adjusting the headlamp's spatial distribution based on vehicle velocity, steering-wheel rotation, weather conditions, or driver input. *Id.* at 3:11–4:3.

Petitioner relies on Gotou's control ECU as the claimed processor that receives map data indicating upcoming road curvature and, before the vehicle reaches the curve, determines the desired optical axis to increase light in the direction of road curvature, and relies on Harbers's LED headlamps as the mechanism included in the combination's headlights for realizing the desired optical axis. Pet. 28–50. Petitioner submits that it would have been obvious to combine the teachings in that way because "the combination would have enhanced how Gotou illuminates the surroundings of a vehicle, providing Gotou's headlights with Harbers'[s] LEDs to provide 'more dynamic lighting possibilities.'" Pet. 21 (quoting Ex. 1004, 1:43–45; citing Ex. 1003, 3:24–35, Fig. 1; Ex. 1002 ¶ 59). Petitioner asserts that, in the combination, "Gotou's ECU would have sent control signals . . . that . . . control each of Harbers'[s] LEDs . . . to direct how the optical axes of headlights 2 change." *Id.* (citing Ex. 1002 ¶ 59). Petitioner asserts additionally that the combination "would have improved the efficacy of Gotou's system, providing improved lighting by right and left headlights 2,

and in turn, improvements to the driver's view of surroundings, furthering Gotou's goals of 'superior visibility.'" *Id.* at 22–23. Petitioner contends that "only routine, known circuitry and/or programming changes would have been necessary to adjust ECU 10 such that its control signals implement Harbers'[s] LED control." *Id.* at 25 (citing Ex. 1002 ¶ 60).

1. The "control" limitation

Patent Owner argues that the Petition fails to show that the asserted combination discloses "the control limitation in claims 1–22"—"control at least a first plurality of the LED light sources to provide light based at least in part on the determined light change and prior to the motor vehicle reaching the road curvature." Prelim. Resp. 20. Patent Owner contrasts Gotou's motor-pivoted single-lamp unit with Harbers's non-moveable multi-LED system, contending "the applied references are not functionally interchangeable." *Id.* Petitioner, however, does not rely on interchanging the mechanical aspects of the two systems. Rather, the combination applies Gotou's control system with Harbers's LED light source. Pet. 20–28. Petitioner has adequately supported that Gotou's control system would determine the desired optical axis, which could then be realized with Harbers's light sources.

Additionally, because Gotou's system anticipates direction changes and moves the optical axis "before the steering wheel is actually turned" (Ex. 1003, 6:40–44), Patent Owner contends it is not compatible with Harbers's control strategy, which depends on the "steering wheel position during a turn." Prelim. Resp. 22 (emphasis omitted). But Petitioner does not assert a combination including Harbers's control strategy. Pet. 20–28. Thus, Harbers's control strategy does not impact whether the claims read on the

asserted combination. To the extent Patent Owner argues that Harbers's different control strategy would preclude the asserted combination with Gotou's control system, we do not agree. Gotou's control system determines the optical axis required at any given time. Ex. 1003, 3:62–63, 4:45–47. Harbers describes a headlamp system in which "spatial distribution is (continuously) adjustable." Ex. 1004, 2:34. As Patent Owner points out, in Harbers, "spatial distribution of the light beam is achieved by controlling the individual LEDs and the corresponding light beam segments; the optical axis of each LED is fixed." Prelim. Resp. 23 (citing Ex. 1004, 2:56–60). Harbers describes that the spatial distribution may respond to a number of internal or external conditions. Ex. 1004, 2:11–22, 3:11–4:3. Stated otherwise, Harbers's headlamp can flexibly respond to create a desired spatial distribution and is not limited to one particular source for the desired distribution. Thus, Petitioner's proposed combination is consistent with Harbers's teachings, in that Gotou's controller would provide a desired spatial distribution to Harbers's headlamp.

According to Patent Owner, "use of map information to generate the single optical axis angle calculation in Gotou, without more, would be of no use as an input to the Heinz and Harbers LED systems." Prelim. Resp. 25. In particular, Patent Owner questions "how the optical axis angle calculation in Gotou would be used to control individual LEDs in the Harbers and Heinz headlights." *Id.* at 26. We do not agree. Because Harbers describes a system that can flexibly respond to a desired spatial light distribution, it facilitates a system in which Gotou's controller provides a desired optical axis. Thus, the present record supports Petitioner's contention that skilled artisans could

readily adapt Harbers's headlamp to respond to the desired distribution from Gotou's controller.

2. Reason to combine

Relatedly, Patent Owner argues that Petitioner makes an unsupported assertion that "Gotou's ECU would have been enhanced to provide headlight control as taught by Harbers, where the ECU's control signals ('indicating signals') would have controlled LEDs as taught by Harbers." Prelim. Resp. 29–30 (quoting Pet. 24) (emphases omitted). In Patent Owner's view, Harbers discloses controlling its LEDs based only on "three fixed inputs: 'the velocity of the vehicle,' 'the rotational position of the steering wheel,' and manual inputs by the driver." *Id.* at 29 (quoting Ex. 1004, 3:11–17, 3:24–42, 3:54–59). We do not agree that Harbers is so limited. It discloses a system that can achieve a desired spatial distribution based on a number of possible inputs. Ex. 1004, 2:11–22, 3:11–4:3. We agree with Petitioner that skilled artisans would have understood that a different control strategy could be used to define Harbers's desired spatial distribution. *See* Pet. 24–25 ("[O]nly routine, known circuitry and/or programming changes would have been necessary to adjust ECU 10 such that its control signals implement Harbers'[s] LED control." (citing Ex. 1002 ¶ 60)).

Patent Owner challenges whether Petitioner sufficiently justifies the asserted combination. Prelim. Resp. 34–36. Petitioner asserts that using Harbers's LED array in place of Gotou's headlights "would have enhanced how Gotou illuminates the surroundings of a vehicle, providing Gotou's headlights with Harbers'[s] LEDs to provide 'more dynamic lighting possibilities.'" Pet. 21 (quoting Ex. 1004, 1:43–45, 2:6–9); *accord id.* at

22–23 (asserting the combination "would have improved the efficacy of Gotou's system, providing improved lighting by right and left headlights 2, and in turn, improvements to the driver's view of surroundings, furthering Gotou's goals of 'superior visibility'"). We conclude that Petitioner provides a logical reason that skilled artisans would have made the combination.

Patent Owner asserts that Gotou teaches away from the claimed invention because it adjusts illumination before the steering wheel is turned, while Harbers teaches illumination that depends on the steering-wheel position. Prelim. Resp. 36–37. On the present record, that argument does not show a flaw in the proposed combination. At most, Patent Owner has identified preferences expressed in the prior art, rather than disclosures that would discourage skilled artisans from making the asserted combination. Moreover, the asserted combination satisfies Gotou's preference for adjusting illumination before the steering wheel turns. Thus, Patent Owner has not shown that the asserted combinations would have proceeded counter to the references' disclosures.

Relatedly, Patent Owner argues that Gotou disclosed a "fully functional mechanical lighting system" and that skilled artisans would have no need to modify that system. Prelim. Resp. 40–43. We do not agree. As discussed already, Petitioner explains that the asserted combination would have improved lighting performance over Gotou's mechanical system. Pet. 21. That is sufficient. *See Intel Corp. v. PACT XPP Schweiz AG*, 61 F.4th 1373, 1380 (Fed. Cir. 2023).

We conclude that Petitioner has provided an adequate reason that skilled artisans would have combined Gotou and Harbers as asserted.

3. *Reasonable Expectation of Success*

Patent Owner argues that the asserted combinations would not have been "predictable, straightforward, and routine" as Petitioner asserts. Prelim. Resp. 32–33. In this regard, Patent Owner distinguishes Gotou's mechanical aiming system from Harbers's fixed, multi-LED system. *Id.* We do not agree that the systems were so different that Petitioner's proposed combination would have been infeasible. Petitioner's asserted combination relies on aspects distinct from Gotou's particular aiming mechanism. Instead, it relies on Gotou's control methodology using map data to predicted changes in the desired illumination angle. Pet. 60–79. Thus, we do not agree with Patent Owner that the asserted combination required "extensive modifications." Prelim. Resp. 33.

Adapting Gotou's control system to use Harbers's multi-LED headlights would have involved software to translate Gotou's control-system output of illumination axis to Harbers's target spatial distribution. That task appears to be well within the ordinary skill in the art. *See Keynetik, Inc. v. Samsung Elecs. Co.*, No. 2022-1127, 2023 WL 2003932, at *2 (Fed. Cir. Feb. 15, 2023) (nonprecedential) ("Normally, once the function to be performed by software has been identified, writing code to achieve that function is within the skill of the art." (citing *Fonar Corp. v. Gen. Elec. Co.*, 107 F.3d 1543, 1549 (Fed. Cir. 1997))).

We conclude Petitioner has shown that skilled artisans would have had a reasonable expectation of success if making the asserted combination.

4. *Conclusion*

We have reviewed Petitioner's contentions for claims 1, 2, 12, 13, 23, and 24 based on Gotou and Harbers, and Patent Owner's arguments

challenging that combination, and conclude that Petitioner's contentions and evidence support institution. *See* Pet. 14–55.

D. Obviousness over Heinz and Gotou or Heinz, Gotou, and Harbers

Petitioner asserts two grounds using Heinz as the primary reference—one combining it with Gotou and another combining it with Gotou and Harbers. Pet. 55–86.

Heinz discloses a vehicle lighting system in which a controller selectively switches lights to generate a light "adapted to the driving situation of the motor vehicle." Ex. 1006, 2:28–38. Heinz's controller may receive data including steering wheel angle, velocity, and turn signal activation. *Id.* at 2:53–55. It may also receive route-detection data to determine the roadway path. *Id.* at 3:2–9. Heinz discloses that "data of a vehicle navigation system may be used" "for detecting the path of the roadway." *Id.* at 5:31–34.

Petitioner submits that, in light of Heinz's suggestion to use navigation data, skilled artisans "would have looked to Gotou for explicit implementation details on the format of such navigational data." Pet. 61. The result would be "Heinz's system explicitly considering map information indicating the direction and sharpness of a road curve and information on proper vehicle position to determine where light from headlights should be directed." *Id.* at 62 (citing Ex. 1002 ¶ 102). Petitioner argues additionally that the combined system would determine a headlight direction change prior to reaching a road curvature, as taught by Gotou. Pet. 73–79.

Patent Owner challenges the combinations using Heinz as a primary reference for much the same reasons as discussed above regarding Gotou

and Harbers. Pet. 30–32. According to Patent Owner, skilled artisans reading Heinz would not look to Gotou, because Heinz teaches that turning the headlights to accommodate a corner has a disadvantage of losing forward illumination. Prelim. Resp. 30–31 (citing Ex. 1006, 1:37–46). Petitioner, however, does not propose combinations using Gotou's mechanical aiming. Rather, Petitioner proposes using Gotou's navigational data to inform Heinz's controller. Pet. 60–64; *accord id.* at 71 ("[I]n the Heinz-Gotou combination, Heinz's system explicitly considers map information indicating the direction and sharpness of a road curve and information on proper vehicle position to determine where light from headlights should be directed as taught by Gotou."). The other proposed modification to Heinz relates to altering the illumination before reaching a road curvature (Pet. 73–79), which similarly does not implicate Gotou's mechanical aiming.

Patent Owner argues also that Heinz teaches away from mechanical lighting systems because of their complexity. Prelim. Resp. 38–40 (citing Ex. 1006, 2:5–10). Because the asserted combination does not include Gotou's mechanical system, the argument is inapposite. Stated otherwise, Heinz's preference for nonmechanical lighting adjustability is satisfied by the asserted combination. Patent Owner raises the same teaching-away argument discussed above—that Gotou teaches away from lighting changes based on steering wheel angle—because Heinz teaches determining illumination based on steering-wheel angle. *Id.* at 37–38. As discussed above, that argument is not persuasive because it at most identifies a preference in the prior art, not a disclosure that would discourage skilled artisans from making the asserted combination.

Patent Owner argues additionally that Gotou's system addresses "forward, curve illumination" and therefore would not apply to a system seeking to improve lateral illumination. Prelim. Resp. 31–32 (emphasis omitted). But Gotou describes its field as "controlling of a lighting region of the head lamp in a horizontal direction." Ex. 1003, 1:7–8. Thus, we do not agree with Patent Owner that Gotou would not apply to improving lateral illumination.

We have reviewed Petitioner's contentions for claims 1, 2, 12, 13, 23, and 24 based on Heinz and Gotou, and Patent Owner's arguments challenging that combination, and conclude that Petitioner's contentions and evidence support institution. *See* Pet. 55–79, 84–86.

As to the ground including Heinz, Gotou, and Harbers, Petitioner relies on Harbers for the "control" limitation, arguing that Harbers's teachings are relevant if the claims are interpreted to require each LED light source is individually or separately controlled. *Id.* at 79. Petitioner contends that Harbers teaches the claim language under such an interpretation, and that skilled artisans had reason to use Harbers's teachings in that regard. *Id.* at 80–84. Specifically, Petitioner asserts "the combination would have enhanced the Heinz-Gotou system, providing Harber[s]'s individualized and more precise control of Heinz's LED lighting elements to produce a desired spatial distribution of light." Pet. 80 (citing Ex. 1002 ¶ 130).

Patent Owner does not separately address Petitioner's contentions directed to the Heinz-Gotou-Harbers combination. We have reviewed Petitioner's contentions for claims 1, 2, 12, 13, 23, and 24 based on Heinz, Gotou, and Harbers, and conclude that Petitioner's contentions and evidence support institution. *See* Pet. 79–86.

E. DISCRETIONARY DENIAL UNDER § 312(a)(2)

Patent Owner argues that we should deny institution because Petitioner fails to identify all real parties in interest ("RPI"). Prelim. Resp. 43–46. In Patent Owner's view, Mercedes-Benz USA, LLC, is a party in litigation involving the '029 patent and is a Unified member, and therefore should have been identified. *Id.*

Patent Owner has not asserted that a statutory bar or other estoppel would apply to Mercedes-Benz in this proceeding. *See* 35 U.S.C. §§ 315(b), (e). Accordingly, we need not address whether Mercedes-Benz is an unnamed RPI. *SharkNinja Operating LLC v. iRobot Corp.*, IPR2020-00734, Paper 11 at 18–20 (PTAB Oct. 6, 2020) (precedential). We decline to exercise discretion to deny institution based on Petitioner's identification of real parties in interest.

F. DISCRETIONARY DENIAL UNDER § 314(a)

Patent Owner argues we should exercise our discretion to decline institution under § 314(a) because "Unified flouted ethics rules, increased inefficiencies and the possibility of inconsistent rulings, and is creating an unnecessary burden on the Board and Patent Owner." Prelim. Resp. 47–54.

According to Patent Owner, Petitioner's failure to name its member companies as real parties in interest prohibits the Board from accurately identifying potential conflicts. *Id.* at 48–50. While the panel appreciates Patent Owner's concern, the panel confirms that it does not have a conflict with the asserted unnamed RPI, Mercedes-Benz USA, LLC.

Patent Owner argues that we should deny institution because there is no litigation between the parties. Prelim. Resp. 51. But there is no

requirement that a petitioner be involved in litigation in order to file an IPR petition. *See* 35 U.S.C. § 311.

Patent Owner argues that nothing will stop Petitioner's member companies, such as Mercedes-Benz, from pursuing these IPR grounds in the district-court litigation, and that we should therefore decline to institute. Prelim. Resp. 52. To the extent Patent Owner believes that estoppel should apply to a litigation party after an IPR final written decision, Patent Owner may assert the AIA's estoppel provision in the district court. *See* 35 U.S.C. § 315(e)(2). We do not agree that we should deny institution based on speculation regarding arguments that may be made in the district court.

Patent Owner submits that an IPR petition filed by Volkswagen addresses the '029 patent and raises challenges based on Gotou. Prelim. Resp. 53 (identifying IPR2022-01586). According to Patent Owner, we should deny institution because Volkswagen's petition overlaps the present Petition and will burden the Board. We do not agree. The Board has not yet considered the merits of the petition in IPR2022-01586. Assuming Patent Owner accurately represents the substantial substantive overlap, there would be little additional burden to the Board if it additionally institutes Volkswagen's petition. Further, Patent Owner has not adequately supported that the Board should deny the first petition challenging a patent when other petitions have been filed but not yet considered.

Moreover, Patent Owner has not shown a significant relationship between Petitioner and Volkswagen that would support denying institution here. Patent Owner argues that "Mercedes and VW also have a significant relationship as co-defendants in litigation." Prelim. Resp. 54 (citing *Valve Corp. v. Elec. Scripting Prods., Inc.*, IPR2019-00062, Paper 11 (PTAB

Apr. 2, 2019) (precedential)). Patent Owner does not contend that Mercedes-Benz and Volkswagen are accused of infringement based on the same products. Thus, *Valve* does not apply. We do not agree that litigation co-defendants necessarily have a significant relationship that would justify discretionary denial.

We have considered Patent Owner's arguments for discretionary denial and decline to exercise our discretion as Patent Owner seeks.

III. CONCLUSION

For the reasons discussed above, we conclude Petitioner has shown a reasonable likelihood of prevailing with respect to at least one claim. We have evaluated all of the parties' submissions and determine that the record supports institution.

Our determination at this stage of the proceeding is based on the evidentiary record currently before us. This decision to institute trial is not a final decision as to patentability of any claim for which *inter partes* review has been instituted. Our final decision will be based on the full record developed during trial.

IV. ORDER

Accordingly, it is

ORDERED that, pursuant to 35 U.S.C. § 314(a), *inter partes* review of claims 1, 2, 10–13, 23, and 24 of the '029 patent is instituted on the grounds set forth in the Petition; and

FURTHER ORDERED that, pursuant to 35 U.S.C. § 314(c) and 37 C.F.R. § 42.4, notice is hereby given of the institution of a trial commencing on the entry date of this decision.

For PETITIONER:

Ellyar Barazesh
David Seastrunk
UNIFIED PATENTS, LLC
ellyar@unifiedpatents.com
david@unifiedpatents.com

For PATENT OWNER:

Sangeeta Shah
David Bir
Bernard Tomsa
BROOKS KUSHMAN P.C.
sshah@brookskushman.com
dbir@brookskushman.com
btomsa@brookskushman.com

Trials@uspto.gov
571.272.7822

Paper 12
Date: May 23, 2023

UNITED STATES PATENT AND TRADEMARK OFFICE

BEFORE THE PATENT TRIAL AND APPEAL BOARD

CURRENT LIGHTING SOLUTIONS, LLC, and HLI SOLUTIONS, INC.,
Petitioner,

v.

ALSI HOLDINGS, LLC,
Patent Owner.

IPR2023-00198
Patent 8,721,114 B2

Before HUBERT C. LORIN, GRACE KARAFFA OBERMANN, and DONNA M. PRAISS, *Administrative Patent Judges*.

LORIN, *Administrative Patent Judge*.

DECISION
Granting Institution of *Inter Partes* Review
35 U.S.C. § 314

I. INTRODUCTION

A. Background

Current Lighting Solutions, LLC and HLI Solutions, Inc. (collectively "Petitioner") filed a Petition (Paper 1, "Pet.") requesting *inter partes* review of claims 1–19 of U.S. Patent No. 8,721,114 B2 (Ex. 1001, "the '114 patent"). ALSI Holdings, LLC ("Patent Owner") filed a Preliminary Response (Paper 7, "Prelim. Resp."). Petitioner also filed a Preliminary Reply (Paper 9, "Prelim. Reply") and Patent Owner filed a Preliminary Sur-reply (Paper 10, "Prelim. Sur-reply").[1]

We have jurisdiction under 35 U.S.C. § 6.

Upon consideration of the arguments and evidence presented by Petitioner, we are persuaded that Petitioner has demonstrated, under 35 U.S.C. § 314(a), a reasonable likelihood that it would prevail in showing the unpatentability of at least one challenged claim.

For the reasons stated below, we institute *inter partes* review as to challenged claims 1–19 of the '114 patent.

B. Related Proceedings

Petitioner indicates, and Patent Owner agrees, that the '114 patent is being asserted in *ALSI Holdings, LLC v. Current Lighting Solutions, LLC, d/b/a GE Current, a Daintree Company, and HLI Solutions, Inc., f/k/a Hubbell Lighting, Inc., both d/b/a Hubbell Control Solutions and/or*

---

[1] The Board authorized the filing of these papers. *See* Ex. 1057. The Board also authorized Petitioner to file a *Sotera* stipulation. *Id.* at 16:24–25; Ex. 1056.

Current, Case No. 6:21-cv-01187-ADA, (W.D. Tex. 2021) ("District Court Action"). Pet. vii; Paper 4, 1.

Petitioner indicates that related U.S. Patent Nos. 9,699,854; 8,186,855; 8,322,881; and 9,049,753; as well as U.S. Design Patent Nos. D650,508 and D612,088 are also being asserted in the District Court Action. Pet. vii. Petitioner also indicates that it has "filed petitions regarding U.S. Patent Nos. 9,699,854 and 8,322,881." *Id.*

C. The '114 patent (Ex. 1001)

1. Disclosure

The '114 patent, titled "LED Lamp Apparatus and Method of Making an LED Lamp Apparatus," relates to "a light emitting diode (LED) or other solid state light emitter light device." Ex. 1001, code (54), 1:17–18.

The '114 patent explains that lighting devices that use incandescent and halogen bulbs suffer from various problems including being energy in-efficient, having short lifetimes, producing unwanted heat, and having problematic housing designs that causes electrical shorts, or other problems. Ex. 1001, 1:20–51.

According to the '114 patent, although LEDs are known in general, "LEDs have not been considered an option in the past for providing quality light in many applications because they do not provide enough useful light at a distance." Ex. 1001, 1:57–61. Accordingly, the '114 patent considers that "there is a need in the art for methods and [] apparatuses that can be used with LEDs or other solid state emitters to provide quality light from a distance." *Id.* at 1:63–65.

To that end, the ’114 patent discloses “an ‘LED device’ that directs enough light from a plurality of LEDs to a distant area in a form that provides an acceptable amount of light.” Ex. 1001, 2:9–11. This is depicted in Fig. 1 of the ’114 patent, reproduced below.

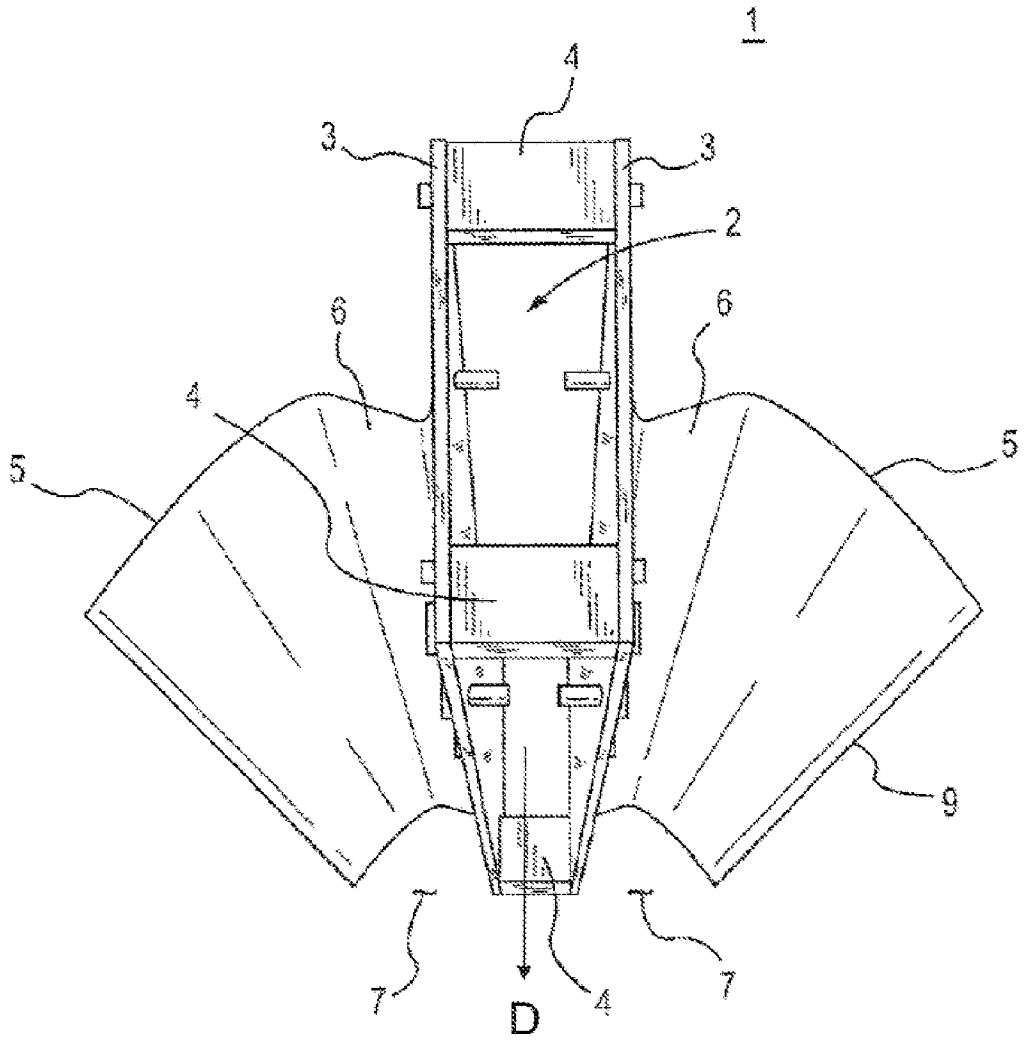

FIG.1

Fig. 1 of the ’114 patent (Ex. 1001) shows lighting device 1 having rolled reflector 5.

Lighting device 1 depicted in Fig. 1 comprises "central chimney portion 2 formed by two chimney side plates 3" that are "connected together via at least two spacers 4." Ex. 1001, 3:35–37. "A plurality of LEDs 8 are mounted through each chimney side plate 3," as depicted in Fig. 5, reproduced below.

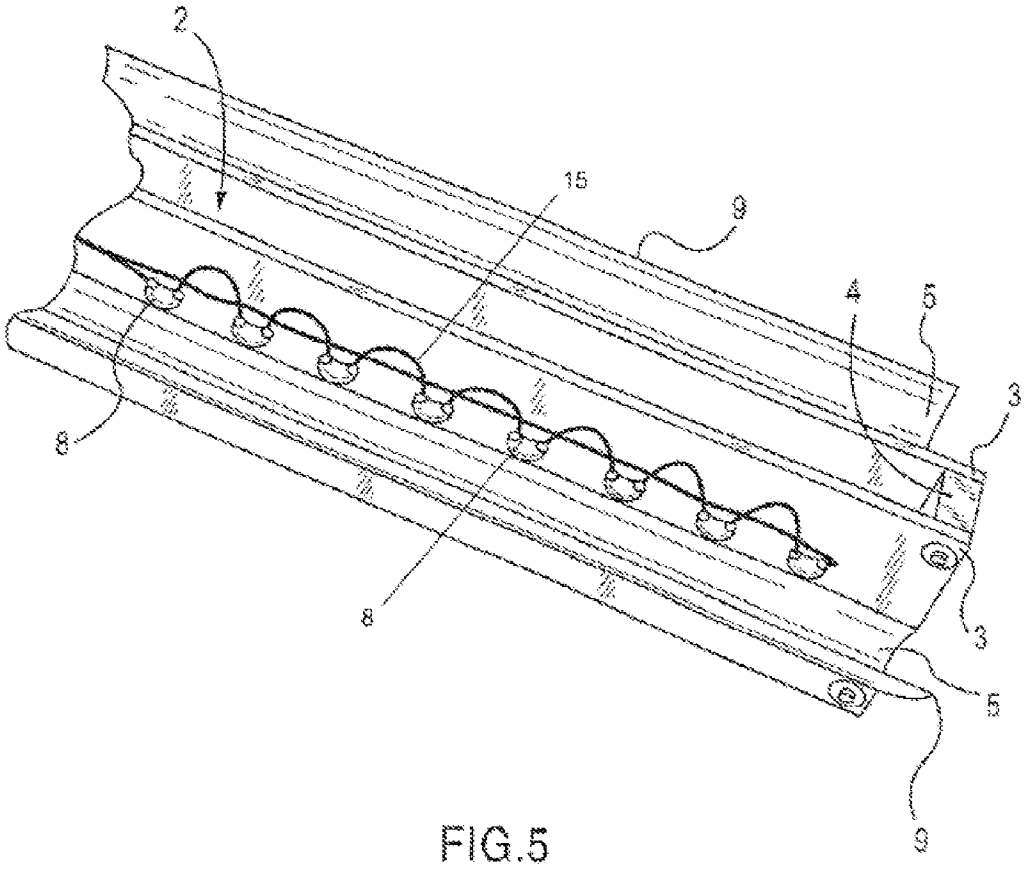

FIG.5

Fig. 5 depicts the lighting device of Fig. 1 from a different view. Ex. 1001, 3:33–34.

LEDs 8 include a light emitting portion that "faces a reflector 5, such that the direction of maximum intensity light emitted by the LEDs is substantially anti-parallel with the [illumination] direction, D." *Id.* at

3:37–38, 3:43–48. Each reflector 5 includes flat portion 6 adjacent to chimney side plate 3. *Id.* at 5:6–7. "Light from the LEDs is directed toward the bottom of the device by the reflector, so that light is directed toward the opening 7 between the bottom of the chimney side piece 3 and the far edge 9 of the reflector 5." *Id.* at 4:18–22. According to the '114 patent, variations of reflector 5 may be used, including embodiments where the reflector is rolled, as in Fig. 1, with the roll including a continuous curve. *Id.* at 4:32–35.

The '114 patent explains that LED lifetime may be increased by reducing the amount of heat around the LEDs by using "a central chimney or heat sink that circulates air and removes heat from the area around the LEDs," and which includes "a central open portion between the two chimney sides pieces of the unit." Ex. 1001, 7:15–22. "In addition, each chimney side piece may include openings above each LED" that "increase air flow to and from the device as well as circulation around the LEDs." *Id.* at 7:29–32. According to the '114 patent, the device may be configured so that "the chimney is spaced away from a ceiling or wall, and both ends of the device are open," which also "increase[s] the amount of air circulation and effectively lower[s] the temperature around the LEDs." *Id.* at 7:33–37.

2. Claims 1–19

Petitioner challenges claims 1–19. Pet. 1.

Claim 1 is the sole independent claim and is reproduced below. Consistent with the Petition, bracketing is added to assist in referring to the claim elements. Pet. 12–13.

> 1. [1.0] An illumination device for providing light in an illumination direction, the illumination device comprising:

[1.1] a central body having a surface facing the illumination direction and including a first heat dissipating mechanism for allowing heat to dissipate through a central portion of the central body;

[1.2] first and second groups of Light Emitting Diodes (LEDs) connected to the central body directly or via an attachment feature, the first and second group of LEDs being spaced apart from each other;

[1.3] a second heat dissipating mechanism including one or more openings formed in the central body or in the attachment feature;

[1.4] a first reflector extending from the central body adjacent to the first group of LEDs for directing light from the first group of LEDs in the illumination direction; and

[1.5] a second reflector extending from the central body adjacent to the second group of LEDs for directing light from the second group of LEDs in the illumination direction,

[1.6] wherein heat generated by the first and second groups of LEDs is dissipated through the central body via the first heat dissipating mechanism,

[1.7] wherein the one or more openings of the second heat dissipating mechanism provide fluid flow cooling of the first and second groups of LEDs, and

[1.8] wherein one of the first and second heat dissipating mechanisms allows heat to dissipate between the first and second reflectors.

Ex. 1001, 11:58–12:18.

D. Asserted References

Petitioner relies on the following references:

Name	Reference	Ex. No.
Burton	U.S. Patent Application Publication No. 2008/0002410 A1, published Jan. 3, 2008	1049
Schuknecht	U.S. Patent Application Publication No. 2006/0232984 A1, published Oct. 19, 2006	1041
Hsu	U.S. Patent Application Publication No. 2005/0116597 A1, published June 2, 2005	1024
Leong	U.S. Patent No. 6,853,151 B2, issued Feb. 8, 2005	1051
Hashimoto	U.S. Patent No. 7,959,330 B2, issued June 14, 2011	1052
Baek	U.S. Patent Application Publication No. 2007/0075325 A1, published Apr. 5, 2007	1053

Petitioner also relies on the Declaration of Dr. Jack Josefowicz, Ph.D. (Ex. 1003, "Josefowicz Decl.") and the prosecution file for the '114 patent (Ex. 1002) as support for the various contentions.

E. Asserted Grounds

Petitioner contends that claims 1–19 of the ’114 patent are unpatentable under the following grounds:

Ground	Claims Challenged	35 U.S.C. §	Reference(s)/Basis
I	1–17, 19	§ 103[2]	Burton, POSITA[3]
II	1–14, 16, 18, 19	§ 103	Schuknecht, Hsu, Leong, POSITA
III	1, 3–12, 14, 17–19	§ 103	Hashimoto, Baek, POSITA

Pet. 1–2.

II. ANALYSIS

A. Discretionary Denial Under 35 U.S.C. § 314(a)

Patent Owner requested that we exercise our discretion to deny institution under § 314(a) due, *inter alia*, to the advanced state of the District Court Action. *See* Prelim. Resp. 48–54.

---

[2] The Leahy-Smith America Invents Act, Pub. L. No. 112-29, 125 Stat. 284 (2011) (“AIA”), amended 35 U.S.C. §§ 102 and 103. Because the challenged claims of the ’114 patent have an effective filing date before the effective date of the applicable AIA amendments, we refer to the pre-AIA versions of 35 U.S.C. § 103 throughout this Decision.

[3] Person of ordinary skill in the art. Petitioner attributes certain knowledge to a POSITA by asserting that “a POSITA would understand . . . .” *See, e.g.*, Pet. 22.

However, if Petitioner has provided a *Sotera*[4] stipulation, we will not discretionarily deny institution under § 314(a) in view of a District Court Action. *See* Director Memorandum, *Interim Procedure for Discretionary Denials in AIA-Post Grant Proceedings With Parallel District Court Litigation*, U.S. PATENT AND TRADEMARK OFFICE (June 21, 2022) ("Director Memo"), at 3, 7, 9. Petitioner argues:

> the PTAB will not discretionarily deny institution of an IPR or PGR in view of parallel district court litigation where a petitioner stipulates not to pursue in a parallel district court proceeding the same grounds as in the petition or any grounds that could have reasonably been raised in the petition (*i.e.*, a "Sotera stipulation").
>
> In that regard, the Petition provided this stipulation:
>
> Petitioner[] want to make clear they are consenting to a ***full*** *Sotera* stipulation and ***Petitioner will not pursue in the parallel district court litigation or other parallel proceedings the same grounds as raised in this Petition or any grounds that Petitioners could have reasonably raised before the PTAB***. Petitioners agree to not pursue any of the grounds raised in this Petition, any grounds raised within Petitioners' invalidity contentions, or any grounds Petitioners could have reasonably raised before the PTAB in the parallel district court litigation or any parallel proceeding.

Pet. 88.

In making its request, Patent Owner responded to Petitioner's stipulation by arguing that the stipulation set forth in the Petition is not in full accordance with *Sotera*:

---

[4] *Sotera Wireless, Inc. v. Masimo Corp.*, IPR2020-01019, Paper 12 (PTAB Dec. 1, 2020) (precedential, designated Dec. 17, 2020).

> Unlike *Sotera*, the clear language of this stipulation does not include any conditions, particularly the condition of "if IPR is instituted". . . . Furthermore, the clear language does state "any grounds raised within Petitioners' invalidity contentions," in reference to Petitioners' final invalidity contentions filed in the district court litigation.

Prelim. Resp. 52.

The Board authorized Petitioner to make modifications to its stipulation to accord with the language of *Sotera*.[5]

Petitioner subsequently filed a modified *Sotera* stipulation, which now states, in part, that:

> Defendants [i.e., Petitioner] hereby stipulate that, if the U.S. Patent and Trial Appeal Board ("PTAB") institutes the pending *inter partes* reviews in IPR2023-00145, IPR2023-00198 and IPR2023-00125 ("the IPRs"), . . . Defendants agree to not pursue any grounds raised in the IPRs, any grounds raised within Defendants' invalidity contentions that were raised or could have been raised in the IPRs, or any grounds Defendants could have reasonably raised before the PTAB, in this district court litigation or any parallel proceeding.

Ex. 1056, 1–2.

The modified *Sotera* stipulation accords with the language of *Sotera* and is thus a *Sotera* stipulation. Accordingly, we will not discretionarily deny institution of the IPR. Ex. 1056; *see* Director Memo.

Patent Owner raises a concern about the phrase "[d]efendants [i.e., Petitioner] hereby stipulate that, if the U.S. Patent and Trial Appeal Board ('PTAB') institutes the pending *inter partes* reviews in IPR2023-00145, IPR2023-00198 and IPR2023-00125." Prelim. Sur-reply 4; Ex. 1056, 1.

---

[5] *See supra* n.1; Ex. 1056.

Patent Owner interprets this to mean the modified stipulation is "condition[ed] on institution of all three of the following IPRs: 'IPR2023-00145, IPR2023-00198, **and** IPR2023-00125.' EX1056 (emphasis added)." *Id.*

We do not read it that way. The Petition clearly indicates that Petitioner intended to attach a "***full*** *Sotera* stipulation" to this proceeding. Pet. 88 (emphasis original). The modified stipulation merely perfects the "***full*** *Sotera* stipulation" Petitioner initially intended to provide with its Petition. We read said phrase simply as Petitioner's way of expressing that the modified stipulation attaches to all three IPRs if any of the proceedings are instituted.

For the foregoing reasons, we determine that the circumstances of this case do not warrant discretionary denial of the Petition under 35 U.S.C. § 314(a).

B. Discretionary Denial Under 35 U.S.C. § 325(d)

Patent Owner requests that the Board exercise its discretion to deny institution is under § 325(d). Prelim. Resp. 54–57.

Section 325(d) provides that the Director may elect not to institute a proceeding if the challenge to the patent is based on matters previously presented to the Office. 35 U.S.C. § 325(d) states, in pertinent part, that "[i]n determining whether to institute or order a proceeding under this chapter, chapter 30, or chapter 31, the Director may take into account whether, and reject the petition or request because, the same or substantially the same prior art or arguments previously were presented to the Office."

The Board uses a two-part framework for evaluating arguments under § 325(d):

> (1) whether the same or substantially the same art previously was presented to the Office or whether the same or substantially the same arguments previously were presented to the Office; and
>
> (2) if either condition of first part of the framework is satisfied, whether the petitioner has demonstrated that the Office erred in a manner material to the patentability of challenged claims.

Advanced Bionics, LLC v. MED-EL Elektromedizinische Geräte GmbH, IPR2019-01469, Paper 6 at 8 (PTAB Feb. 13, 2020) (precedential) ("*Advanced Bionics*"). "[T]he *Becton, Dickinson* factors provide useful insight into how to apply the framework under 35 U.S.C. § 325(d)." *Id.* at 9 (footnote omitted). The non-exclusive *Becton, Dickinson* factors are:

> (a) the similarities and material differences between the asserted art and the prior art involved during examination;
>
> (b) the cumulative nature of the asserted art and the prior art evaluated during examination;
>
> (c) the extent to which the asserted art was evaluated during examination, including whether the prior art was the basis for rejection;
>
> (d) the extent of the overlap between the arguments made during examination and the manner in which Petitioner relies on the prior art or Patent Owner distinguishes the prior art;
>
> (e) whether Petitioner has pointed out sufficiently how the Examiner erred in its evaluation of the asserted prior art; and
>
> (f) the extent to which additional evidence and facts presented in the Petition warrant reconsideration of the prior art or arguments.

Becton, Dickinson & Co. v. B. Braun Melsungen AG, IPR2017-01586, Paper 8 at 17–18 (PTAB Dec. 15, 2017) (precedential as to § III.C.5, first

paragraph) ("*Becton, Dickinson*"). *Becton, Dickinson* factors (a), (b), and (d) relate to the first part of the *Advanced Bionics* framework (whether the same or substantially the same art or arguments previously were presented to the Office), and *Becton, Dickinson* factors (c), (e), and (f) relate to the second part of that framework (previous Office error). *Advanced Bionics*, Paper 6 at 9–11. Only if the same or substantially the same art or arguments were previously presented to the Office do we then consider whether the petitioner has demonstrated a material error by the Office. *Id.*

Under § 325(d), the art or arguments must have been previously presented to the Office during proceedings, such as examination of the underlying patent application, pertaining to the challenged patent. *Advanced Bionics*, Paper 6 at 7. Previously presented art includes art made of record by the Examiner, and art provided to the Office by an applicant, such as on an Information Disclosure Statement ("IDS"), in the prosecution history of the challenged patent. *Id.* at 7–8.

1. First step of the framework

Patent Owner contends that, "*[a]s clearly shown here*, substantially the same art and arguments were presented during examination, considered by the Examiner, and ultimately found not to render the claims unpatentable." Prelim. Resp. 56 (emphasis added). Patent Owner provides one example:

> during prosecution the Examiner relied on Kaszuba[6] [Ex. 1009] as disclosing "a reflector 36 extending from the central body (see paragraph number 62, reflective panels 36 extend from central

[6] U.S. Patent Application Publication No. 2007/0228289 A1, published Oct. 4, 2007; Application 11/686,897, filed Mar. 15, 2007. Ex. 1009.

> body 32. . . .) adjacent to the (elongated light source or group of LEDs)". EX1002, 173. In the same fashion, Petitioners rely on Burton in Ground 1 as disclosing reflectors. *See* Petition, 22 ("A POSITA would understand each support plate forming the central body includes a parabolic shaped first and second reflector (shaded red) adjacent a given LED array (first/second group of LEDs) for directing light in the illumination direction.").

Id. at 55. Patent Owner adds that Petitioner "rel[ies] on Schuknecht in Ground 2 and Baek in Ground 3 as disclosing first and second reflectors in this same fashion." *Id*. (citing Pet. 45, 74).

As a preliminary matter, the Examiner did not apply Burton, Schuknect, and Baek and Patent Owner does not indicate, nor does there appear to be any indication in the record, that the Examiner considered these references. *See generally* Prelim. Resp. 54–57; Ex. 1002.

As far as Burton, Schuknect, and Baek being cumulative of Kaszuba is concerned (i.e., *Becton, Dickinson* factor (b)), the record strongly suggests otherwise.

Burton, Schuknect, and Baek are directed to devices for illuminating a space, similar to the '114 patent. *Compare* Ex. 1001, 2:6–16, *with* Ex. 1049 ¶ 2 ("LED light unit"), Ex. 1041 ¶ 2 ("fluorescent lamp"), *and* Ex. 1053 ¶ 3 ("Light Emitting Diode (LED) package").

Kaszuba on the other hand, and unlike the '114 patent, is directed to "an ultraviolet (UV) cure chamber for curing a dielectric material disposed on a substrate and to methods of curing dielectric materials using UV." Ex. 1009 ¶ 8.

The devices of Burton, Schuknecht, and Baek (and the '114 patent) are constructed so as to solve very different problems than the problem

Kaszuba is concerned about (illumination versus curing). Under the circumstances, we are persuaded that this indicates a material difference between the asserted art (Burton, Schuknect, and Baek) and the prior art that was involved during examination (Kaszuba), and supports a finding that the references are not cumulative to what was considered during prosecution. *Cf. Becton, Dickinson* factors (a), (b).

Burton, Schuknecht, and Baek (and the ’114 patent) are directed to illumination lamps using conventional illuminating bulbs, fluorescent in the case of Schuknecht and LEDs in the cases of Burton and Baek. Ex. 1041 ¶ 2; Ex. 1049 ¶ 2; Ex. 1053 ¶ 28. Such bulbs output light within the visible spectrum.

Kaszuba’s device is not for illumination but to concentrate UV radiation in such a way that it improves curing a dielectric material disposed on a substrate. Ex. 1009 ¶¶ 9–19. The Examiner relied on Kaszuba as disclosing LEDs, pointing to one recitation of UV LEDs in Kaszuba. Ex. 1002, 172; Ex. 1009 ¶ 83 (“In general, embodiments of the invention contemplate any UV source such as mercury microwave arc lamps, pulsed xenon flash lamps or high-efficiency UV light emitting diode arrays.”) Kaszuba’s LEDs bulbs output light within the UV spectrum.

While LEDs may be used in Kaszuba’s device, which makes Kaszuba somewhat similar to the asserted art, especially Burton and Baek but also Schuknecht, there is a substantial structural difference between the UV LEDs Kaszuba uses for UV curing and conventional illumination LEDs Burton and Baek (and the ’114 patent) use to light a space. In our view, this structural difference coupled with their very different objectives makes the

difference between the asserted art (Burton, Schuknecht, and Baek) and the prior art that was involved during examination (Kaszuba) a material one.

And then there is the matter of the claims.

In arguing that Petitioner presents the same arguments as presented by the Examiner, Patent Owner recognizes that the Examiner relied on Kaszuba as disclosing "a reflector" but Petitioner relies on Burton, Schuknecht, and Baek as disclosing "first and second reflectors." Prelim. Resp. 55.

This is so because the claim the Examiner addressed only called for a single reflector. *Cf.* Ex. 1002, 156 (claim 35: "a reflector"), 172–173 (Final Action: Kaszuba "discloses . . . a reflector 36"). The Examiner did not address whether Kaszuba disclosed "first and second reflectors" because that limitation was added later to the claims, after which the claims were allowed without further examination. *Id.* at 183–187.

The "reflector" limitation before the Examiner read "a reflector extending from the central body adjacent to the group of LEDs for directing light from the group of LEDs in the illumination direction." Ex. 1002, 156 (claim 35).

Contrast that with the patent claims, which call for:

> a first reflector extending from the central body adjacent to the first group of LEDs for directing light from the first group of LEDs in the illumination direction; and
>
> a second reflector extending from the central body adjacent to the second group of LEDs for directing light from the second group of LEDs in the illumination direction.

Ex. 1001, 12:4–9 (claim 1, limitations [1.4], [1.5]); *see also id.* at 12:16–18 (claim 1, limitation [1.8] ("one of the first and second heat dissipating

mechanisms allows heat to dissipate between the first and second reflectors”)).

Petitioner’s arguments are new ones because no arguments during prosecution were presented for a first and second reflector. Therefore, there is no overlap between the arguments made during examination and the manner in which Petitioner relies on Burton, Schuknect, and Baek. *Cf. Becton, Dickinson* factor (d).

Relying on materially-different references not before the Examiner, that is, Burton, Schuknecht, and Baek, Petitioner presents arguments addressing the now-claimed first and second reflector limitations that the Examiner did not examine. *See* Pet. 21–23 (Burton); 45–48 (Schuknecht); and, 73–75 (Baek).

For the reasons discussed related to *Becton, Dickinson* factors (a), (b), and (d), we find the art and arguments are not the same or substantially the same as was previously presented to the Office.

2. Second step of the framework

Because the same or substantially the same art or arguments were not previously presented to the Office, we do not consider whether Petitioner has demonstrated a material error by the Office. *See Advanced Bionics*, Paper 6 at 9–11.

3. Conclusion Regarding § 325(d)

Under the circumstances of this case, we determine that exercising discretion to deny the Petition under § 325(d) is unwarranted.

C. Principles of Law for Patentability

A patent claim is unpatentable under 35 U.S.C. § 103(a) if the differences between the claimed subject matter and the prior art are such that the subject matter, as a whole, "would have been obvious at the time the invention was made to a person having ordinary skill in the art to which said subject matter pertains." *KSR Int'l Co. v. Teleflex Inc.*, 550 U.S. 398, 406 (2007). The question of obviousness is resolved on the basis of underlying factual determinations including: (1) the scope and content of the prior art; (2) any differences between the claimed subject matter and the prior art; (3) the level of ordinary skill in the art; and (4) when in evidence, objective evidence of nonobviousness.[7] *Graham v. John Deere Co.*, 383 U.S. 1, 17–18 (1966).

"In an [*inter partes* review], the petitioner has the burden from the onset to show with particularity why the patent it challenges is unpatentable." *Harmonic Inc. v. Avid Tech., Inc., 815 F.3d 1356, 1363 (Fed. Cir. 2016)*, 815 F.3d at 1363 (citing 35 U.S.C. § 312(a)(3) (requiring *inter partes* review petitions to identify "with particularity . . . the evidence that supports the grounds for the challenge to each claim")). This burden of persuasion never shifts to Patent Owner. *See Dynamic Drinkware, LLC v. Nat'l Graphics, Inc.*, 800 F.3d 1375, 1378 (Fed. Cir. 2015) (discussing the burden of proof in *inter partes* review).

---

[7] Patent Owner does not present objective evidence of nonobviousness.

D. Level of Ordinary Skill in the Art

Petitioner contends:

> A person of ordinary skill in the art of the '114 Patent (POSITA) would have at least a bachelor's degree in a relevant scientific field, e.g., physics, materials science or engineering, or electrical engineering, and two or more years of experience in lighting design with LED fixtures for lighting applications. This description is approximate and additional development experience could make up for less education and vice versa.

Pet. 2 (citing Ex. 1003 ¶¶ 37–40). Patent Owner states, "[f]or the purpose of this Preliminary Response, applying this level of skill is sufficient for the Board to evaluate the Petition Grounds." Prelim. Resp. 11.

Petitioner's proposed definition of a person of ordinary skill in the art appears reasonable, and we adopt that definition for our analysis in this decision.

That being said, we see no reason why the level of ordinary skill in the art is not adequately reflected by the prior art of record. *See Okajima v. Bourdeau*, 261 F.3d 1350, 1355 (Fed. Cir. 2001); *In re GPAC Inc.*, 57 F.3d 1573, 1579 (Fed. Cir. 1995); *In re Oelrich*, 579 F.2d 86, 91 (CCPA 1978).

E. Claim Construction

For petitions filed on or after November 13, 2018, "[claims] of a patent . . . shall be construed using the same claim construction standard that would be used to construe the [claims] in a civil action under 35 U.S.C. § 282(b), including construing the [claims] in accordance with the ordinary and customary meaning of such claims as understood by one of ordinary skill in the art and the prosecution history pertaining to the patent."

37 C.F.R. § 42.100 (2019); *see also Phillips v. AWH Corp.*, 415 F.3d 1303, 1312–14 (Fed. Cir. 2005).

Petitioner proposes constructions for two claim limitations. Pet. 9–12.

1. Limitations [1.4] ("first reflector . . . adjacent to the first group of LEDs") and [1.5] ("second reflector . . . adjacent to the second group of reflectors for directing light from the second group of LEDs").

Petitioner proposes that the two reflector terms in [1.4] and [1.5] be construed as "first/second reflector… for directing light **only** from the first/second group of LEDs." Pet. 11 (emphasis original).

Patent Owner responds, *inter alia*, that "[n]othing in the '114 Patent's specification or prosecution history suggests these terms should be given anything other than their plain and ordinary meaning." Prelim. Resp. 11.

2. Limitation [1.1] ("a first heat dissipating mechanism for allowing heat to dissipate through a central portion of the central body").

According to Petitioner, "[c]laim 1 uses the generic term 'mechanism' which Petitioner[] contends invokes a §112, ¶6 construction." Pet. 11. If §112, ¶ 6 were to be invoked, Petitioner proposes construing "a first heat dissipating mechanism" as limited to the corresponding structure disclosed in the Specification; that is, "'***a central chimney having a walled, open-ended channel defining the central portion of the central body***'." Pet. 12 (citing Ex. 1001, 7:19–21; Ex. 1055 ¶¶ 4–10; Ex. 1003 ¶ 88).

Patent Owner disputes the way Petitioner has framed the inquiry. "[T]he correct inquiry is whether the term 'heat dissipating mechanism' is subject to §112, ¶6," not just the term "mechanism." Prelim. Resp. 14. "Petitioners' proposed term, plucked out of context from the surrounding claim language, has no application here." *Id.*

At this stage of the proceeding, it is unnecessary for us to address Petitioner's proposed constructions for the two limitations in order to resolve any of the patentability disputes. Only those terms that are in controversy need to be construed, and only to the extent necessary to resolve the controversy. *Vivid Techs., Inc. v. Am. Sci. & Eng'g, Inc.*, 200 F.3d 795, 803 (Fed. Cir. 1999).

F. Overview of the Prior Art References

1. Burton (Ex. 1049)

Burton is titled "Apparatus for Using Heat Pipes in Controlling Temperature of an LED Light Unit," and relates to "removing heat from an LED light unit." Ex. 1049, code (54), ¶ 2. Burton's Fig. 5 is reproduced below.

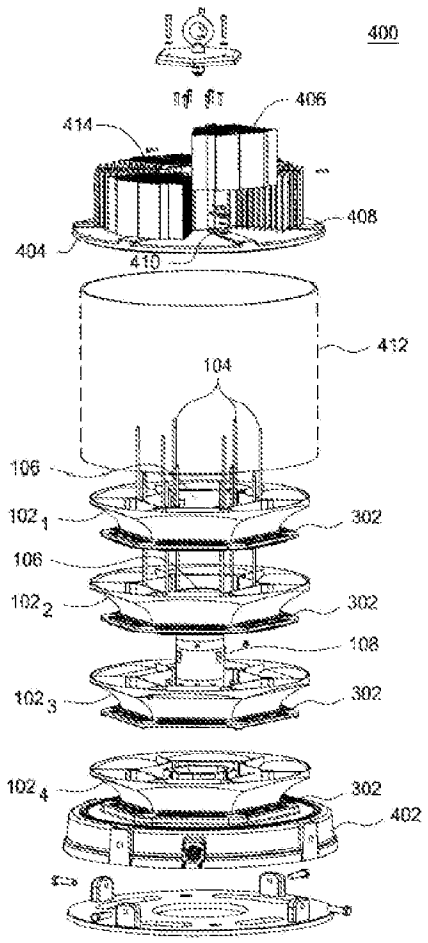

FIG. 5

Fig. 5 illustrates an exploded view of an exemplary LED light unit 400. Ex. 1049 ¶ 45.

LED light unit 400 includes a plurality of support plates with each support plate 102 having at least one array of LEDs 302 formed from a plurality of individual LEDs placed adjacently to one another generally in a line. *Id.* ¶ 32. Support plates 102 are constructed from a thermally conductive material such as copper or aluminum, are stacked vertically above one another, and are coupled to a center column 108. *Id.* ¶¶ 20, 24. Burton explains that air intake 202 at the bottom of center column 108 (*see*

Fig. 2) provides an air flow through inner opening 106 of center column 108 to create an "updraft" to help facilitate heat transfer. *Id.* ¶ 31. In addition, inner openings 106 allow heat pipes 104 to extend vertically up through each support plate 102 for sufficiently removing heat away from the LED arrays. *Id.* ¶ 22. In the depicted embodiment, lens cover 412 may be used to seal LED light unit 400 and a plate 404 supporting at least one heat sink 406. *Id.* ¶ 50. "[L]ens cover 412 may be constructed from a transparent material such as, for example, glass or plastic in order to allow the light generated by the LEDs to exit the unit." *Id.*

2. Schuknecht (Ex. 1041)

Schuknecht is titled "Compact Fluorescent Lamp Fixture Ventilation Method and Apparatus." Ex. 1049, code (54). Schuknecht's Fig. 22 is exemplary and is reproduced below.

FIG. 22

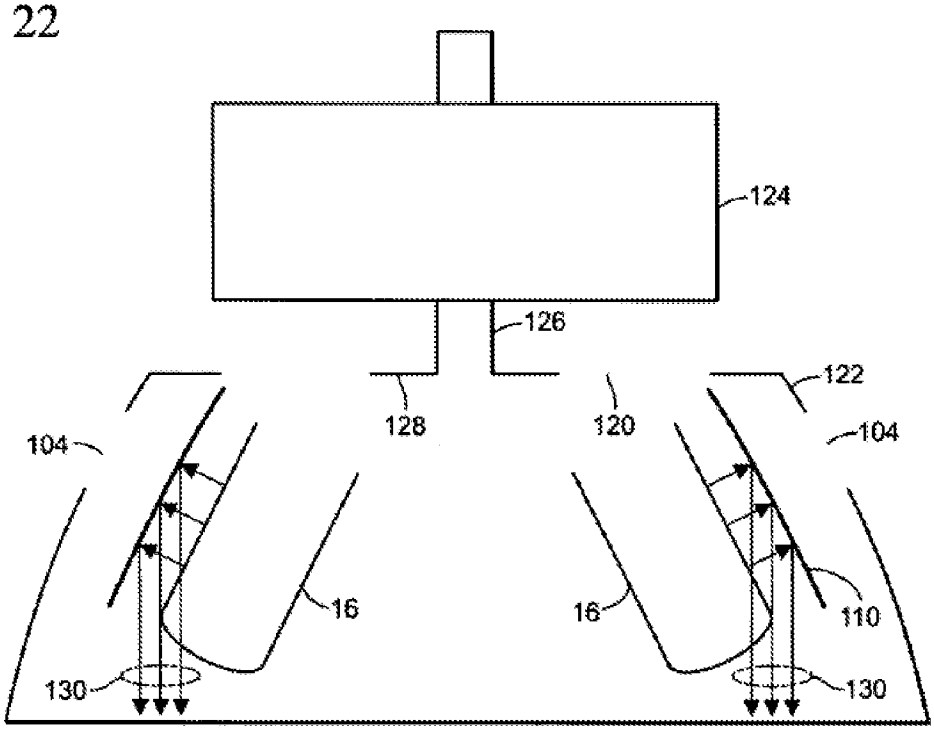

Fig. 22 is a representational line drawing simulating a sectioned view of a CFL fixture showing a reflected light path. Ex. 1049 ¶ 48.

Schuknecht's fixture includes a lamp chamber 122, also known as a reflector or dome, which surrounds a set of compact fluorescent lamps 16. Ex. 1049 ¶ 52. The fixture also includes vertical vents 104, outboard of reflective piece 110, which can be a ring of material as shown in Fig. 22, or individual reflective pieces. *Id.* ¶ 86. The light path, as shown by lines 130, is emitted from lamps 16 and reflected off reflective piece 110. *Id.* ¶ 87. "A portion of the reflected light is reflected downwardly as shown by the light path indicator lines." *Id.* Since reflective piece 110 is mounted inboard from the interior surface of the lamp chamber, it provides a channel for air flow to be directed out from the vents. *Id.* ¶ 86. In particular, there may be

an opening, such as large aperture 120, or small apertures, that will allow heated air to exit the top of the lamp chamber. *Id.* Lamp chamber 122 is mounted to housing 124 through stand-off 126, which provides a connection between housing 124 and lamp chamber 122. *Id.* Lamp chamber 122 also includes structural element, such as attachment plate 128, that is attached to housing 124 through a connection such as stand-off 126. "In this configuration the lamp chamber 122 has air flow management that is independent of any airflow management in the housing 124." *Id.*

3. Hsu (Ex. 1024)

Hsu relates to a light bulb having a light reflecting plate and a light-emitting repository on a circuit board that achieves uniform distribution of the rays of light, to enhance brightness and uniformity. Ex. 1024, code (57).

Fig. 1 of Hsu, reproduced below, depicts light emitting device B. Ex. 1024 ¶ 18.

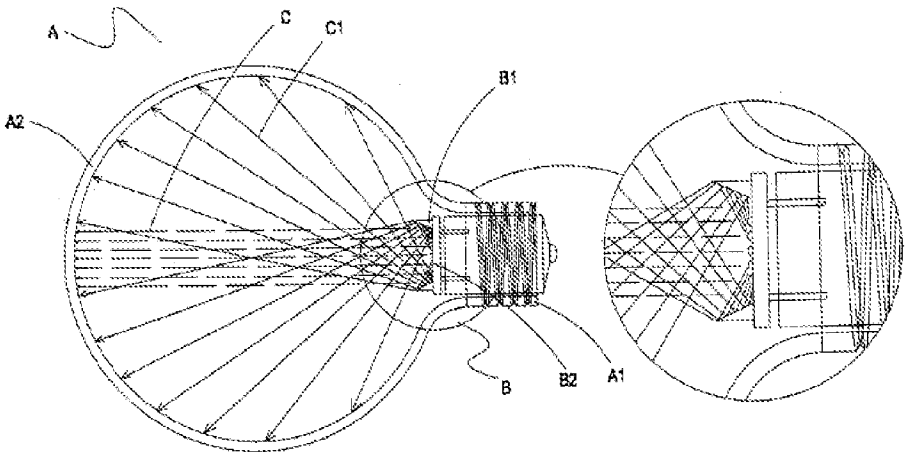

FIG.4

Fig. 4 of Hsu (Ex. 1024) depicts a cross sectional schematic view of light emitting device B emitting rays of light.

In Fig. 4 of Hsu, light-emitting device B is within base A1 of light bulb A. Ex. 1024 ¶ 17. "Upon electricity being supplied to the lightbulb A, rays of light C emit from the light-emitting repository B2, and, after undergoing rectification of light path through deflection from the inclined surface of the light reflecting plate B1, the rays of light C uniformly project on to a bulb A2." *Id.* Hsu explains, rays of light C emitting from lightbulb A provide excellent brightness and degree of uniformity. *Id.* In this embodiment, a plurality of light-emitting elements may be adapted to enhance brightness of illumination, to enable light-emitting repository B2 to achieve a uniform equivalent light source. *Id.* ¶ 18. Light-emitting repository B2 includes "a light-emitting diode, an incandescent diode, a small-scale light bulb, and other related light source elements applied in illumination components." *Id.* ¶ 19.

4. Leong (Ex. 1051)

Leong relates to an "LED lamp for mounting to an existing fluorescent lamp fixture." Ex. 1051, code (57). Leong notes that existing fluorescent lamps have various disadvantages, and discloses light emitting diode (LED) lamps that retrofit fluorescent lighting fixtures using existing ballasts address some of these disadvantages. *Id.* at 4:39–41. According to Leong, these "LED lamps can be used with magnetic, hybrid, and electronic instant and rapid start ballasts, and will plug directly into the present sockets thereby replacing the fluorescent lamps in existing lighting fixtures." *Id.* at 4:42–45. In particular, the "LED retrofit lamps are adapted to be inserted into the housing of existing fluorescent lighting fixtures acting as a direct replacement light unit for the fluorescent lamps of the original equipment," and because they have integral electronic circuitry, they "are able to replace

existing fluorescent lamps without any need to remove the installed ballasts or make modifications to the internal wiring of the already installed fluorescent lighting fixtures." *Id.* at 3:45–54.

5. Hashimoto (Ex. 1052)

Hashimoto relates to a power LED (Light Emitting Diode) lighting assembly with a forced air cooling device. Ex. 1052, 1:5–7.

Hashimoto's Figs. 12a, 12b, and 12c are reproduced below.

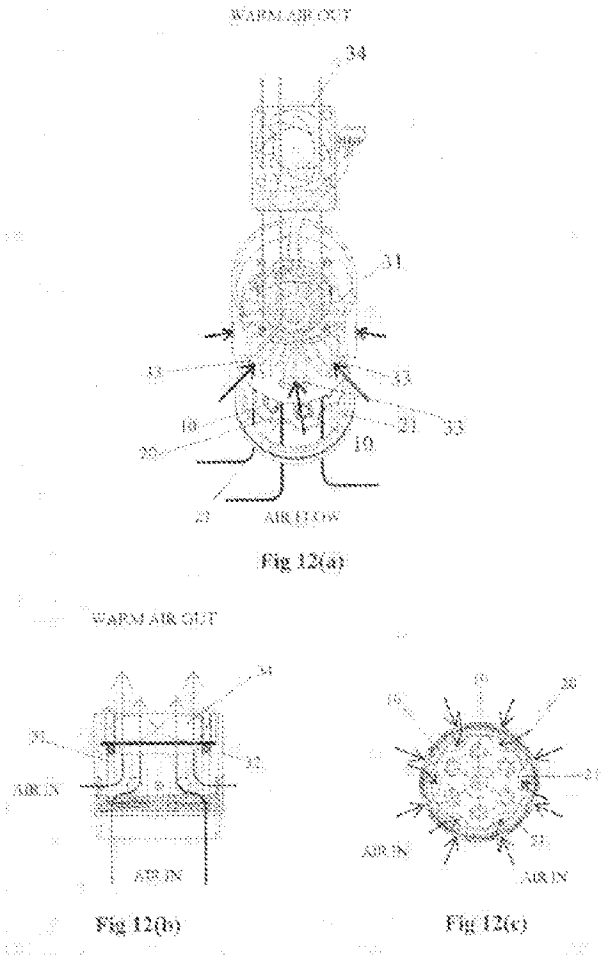

Hashimoto Figs. 12(a), 12(b) and 12(c) are a perspective view, a side view and a front view of the fan ventilation system that show air flows.

Fig. 12(a) shows individual components of a power LED lighting assembly including LEDs 10, LED PC board 20, and heat sink 31 with a plurality of heat radiating fins housed within heat sink enclosure 32. Ex. 1052, 3:4–9. "The heat sink enclosure 32 is formed with a plurality of air openings 33 at its periphery for air communication between the surrounding atmosphere and the heat sink 31." *Id.* at 3:9–12. "The heat sink 31 and the LED PC board 20 are accommodated between the heat sink enclosure 32 and the heat sink cover 30 so that the LED PC board is positioned in close proximity to the heat sink 31 for efficient heat release and cooling effects with help of the air openings 33 in the heat sink enclosure 32." *Id.* at 3:12–17. A micro fan 34 is placed at a rear side of heat sink enclosure 32 "for forced air circulation and ventilation within the heat sink enclosure 32." *Id.* at 3:17–20. Hashimoto explains that "micro fan 34, the heat sink 31 and the LED PC board 20 are accommodated within the heat sink enclosure 32 to complete a fan ventilation system (FVS) or forced air ventilation system for the power LED lighting assembly." *Id.* at 3:60–63. As depicted by arrows in Figs. 12(a) to 12(c), "cool air is drawn from the surrounding atmosphere through the air openings 21 in the LED PC board 20 to travel around the power LEDs 10 on the LED PC board 20 while cooling down the power LEDs." *Id.* at 4:1–4. By this configuration, "heat generated from the power LEDs 10 is transferred through the heat sink 31 having an extended cross-sectional area for efficient heat release," and heated "air is dispelled outside to the surrounding atmosphere through the forced air ventilation action of the micro fan 34." *Id.* at 4:5–9. Thus, the "FVS system of the power LED lighting assembly employs not only the micro fan 34 but also the air openings 21 in the LED PC board 20 and the air

openings 33 in the heat sink enclosure 32 to maximize forced air ventilation." *Id.* at 4:9–13.

6. Baek (Ex. 1053)

Baek "relates to a high power LED package having excellent light efficiency and heat dissipating characteristics." Ex. 1053, code (57). Fig. 1 of Baek is reproduced below.

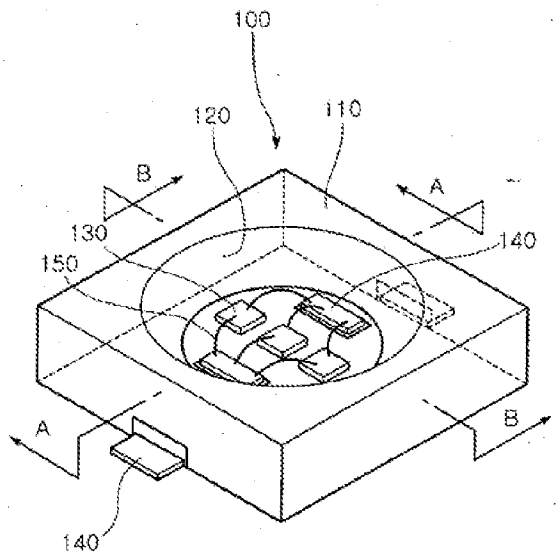

Prior art

FIG. 1

Fig. 1 depicts "a conventional high power LED package." Ex. 1053 ¶ 22.

As shown in Fig. 1, "a sloped annular reflector 120 is formed in a lead frame 110, and a plurality of LED chips 130 are mounted inside the reflector 120, electrically connected to leads 140 of the lead frame 110 via wires 150 (i.e., wire bonding)." Ex. 1053 ¶ 23.

G. Ground I: Burton in view of general knowledge/skill of a POSITA

1. Prior Art Status

In the Preliminary Response, Patent Owner states:

> Petitioners have the burden of proof to establish that a reference that serves as the basis of a ground of unpatentability asserted in an *inter partes* review qualifies as prior art.

Prelim. Resp. 22 (citing 37 C.F.R. § 42.20(c)). Patent Owner contends that "Petitioners have not met this burden. . . . Petitioners have not established that Burton is prior art under 35 U.S.C. § 102(e)." *Id.* at 23.

Petitioner disagrees.

First, Petitioner points out that it "identified Burton as prior art under 35 U.S.C. § 102" in the Petition. Prelim. Reply 1 (citing Pet. 2).

Next, Petitioner points out that the '114 patent claims priority to two provisional applications, the earliest of which has an October 1, 2007 filing date. Prelim. Reply 1. According to Petitioner, "Patent Owner has identified October 1, 2007 as the earliest priority date for the challenged claims." *Id.* (citing Ex. 1035, E1). Petitioner states that it does not contest this. *Id.* (citing Ex. 1003 ¶ 37). Petitioner contends that:

> Since Petitioners are not disputing the October 1, 2007 priority date in this proceeding, they were relying on Burton's June 28, 2007 filing date to qualify the reference as prior art under 35 U.S.C. §102. Burton is therefore § 102(e) prior art as it is "an application for patent [11/770,538], published under section 122(b) [US 2008/0002410 A1], by another [Thomas R. Burton] filed in the United States [June 28, 2007] before the invention [October 1, 2007] by the applicant for patent [James J. Wassel]." 35 U.S.C. § 102(e).

Id. at 1–2.

Finally, Petitioner states that "Petitioners' Declarant expressly relied on Burton's June 28, 2007 filing date to determine Burton was prior art under 35 U.S.C. § 102." Prelim. Reply 2 (citing Ex. 1003 ¶ 90).

Patent Owner responds by reiterating that "Petitioners have the burden to establish that a reference that serves as the basis of a ground of unpatentability asserted in an *inter partes* review qualifies as prior art" and, here, "under 35 U.S.C. §103, or for any other use in this IPR." Prelim. Sur-reply 2.

We agree with Patent Owner that Petitioner has the burden of proof to establish that the challenged claims are unpatentable. *Harmonic Inc. v. Avid Tech., Inc.*, 815 F.3d 1356, 1363 (Fed. Cir. 2016) ("In an [*inter partes* review], the petitioner has the burden from the onset to show with particularity why the patent it challenges is unpatentable."). And part of that burden of proof entails explaining why a reference qualifies as prior art so as to serve as a basis of an asserted ground of unpatentability. That being said, Petitioner identified Burton as prior art under 35 U.S.C. § 102 in the Petition (Pet. 2) and the record is sufficiently clear that Burton qualifies as prior art under 35 U.S.C. § 102(e). Importantly, Patent Owner identified October 1, 2007, as the earliest priority date for the challenged claims, which is not being contested. Based on that uncontested date, Burton would qualify as prior art under 35 U.S.C. § 102(e). *See* Ex. 1035, E1. Given this, and based on the current record, the Petition provides an adequate explanation as to why Burton qualifies as prior art so as to serve as a basis for Ground I.

Patent Owner further contends that Petitioner has also not met its burden of proof by insufficiently explaining the relevance of Burton. Prelim. Resp. 23. We consider that and other similar contentions about the

prior art references (*see id.* at 23–28) in our subsequent analyses of Grounds I–III.

2. Independent claim 1

Petitioner contends that Burton teaches or renders obvious in view of the knowledge of a POSITA all that is claimed. *See* Pet. 16–27.

We observe that Patent Owner has not responded to Petitioner's challenge as to limitations [1.2], [1.3], and [1.6]–[1.8] with any particularity at this stage of the proceeding. *See generally* Prelim. Resp. 28–32. As to these limitations, we have reviewed the evidence Petitioner has presented, briefly discussed below, and based on our evaluation of that evidence, we determine that at this stage Petitioner sufficiently shows on this record that Burton teaches limitations [1.2], [1.3], and [1.6]–[1.8] as claimed. Our discussion below of limitations [1.0 pre], [1.1], [1.4], and [1.5] addresses Patent Owner's specific arguments.

> *[1.0] An illumination device for providing light in an illumination direction, the illumination device comprising:*

Petitioner contends that Burton teaches an illumination device for providing light in an illumination direction as the preamble requires. Pet. 16.

Petitioner explains, *inter alia*, that Burton discloses an "LED light unit 400," which Petitioner characterizes as an "illumination device." Pet. 16 (citing Ex. 1049, ¶ 60.) According to Petitioner, Burton's light unit is intended to be a beacon providing "light outward." *Id.* (citing Ex. 1049 ¶ 20; Ex. 1003 ¶¶ 116–118). In support, Petitioner provides a first annotated

version of Burton's Fig. 8, reproduced below, showing "light outward" from Burton's LED unit (400) with blue arrows. *Id.* at 17;
Ex. 1049, Fig. 8.

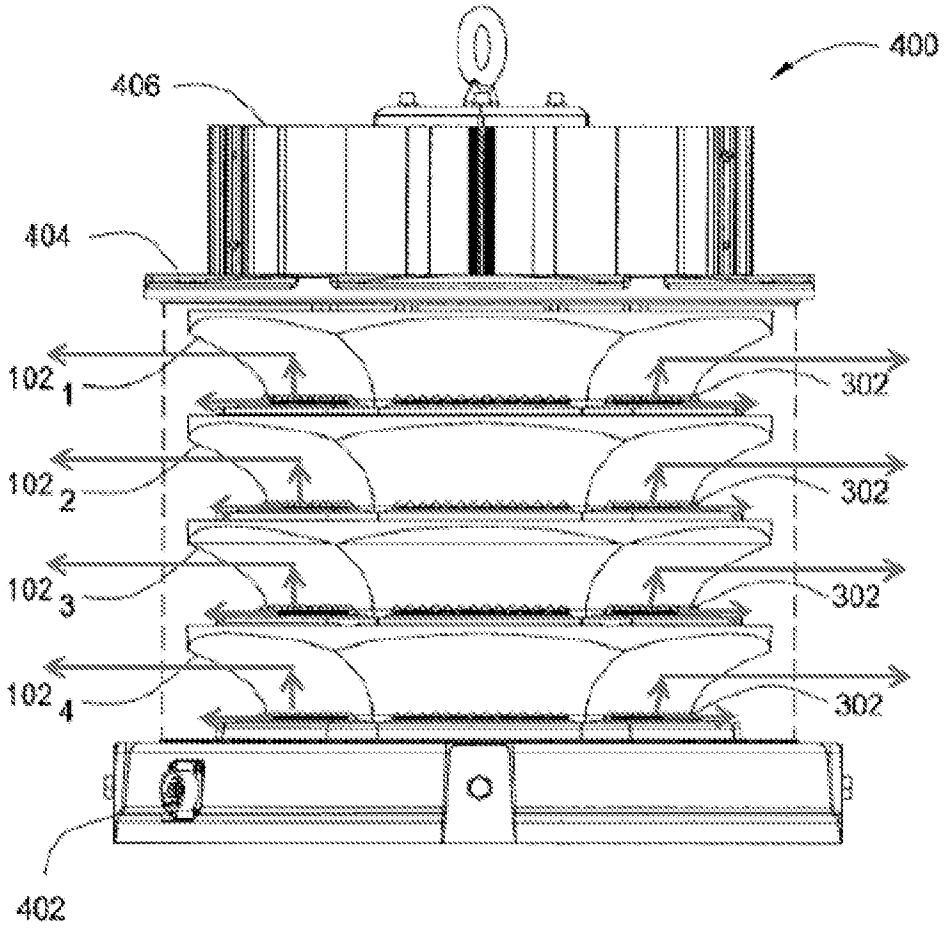

Petitioner's first annotated version of Burton's Fig. 8 depicting a fully assembled LED light unit 400 with blue arrows to indicate "light outward." Pet. 17; Ex. 1049, Fig. 8.

According to Petitioner, in providing "light outward," Burton's light unit, i.e., "illumination device," "provid[es] light in an illumination direction" as the preamble requires. Pet. 17.

In our view, at this stage, Petitioner sufficiently shows on this record that Burton teaches the preamble.

Patent Owner argues that "Burton's light unit is not intended for illumination or as an illumination device." Prelim. Resp. 28. Patent Owner acknowledges that Burton discloses "'the use of LEDs for warning devices such as beacon lights,' 'LEDs can be used in strobing beacon applications,' and 'warning devices which produce a flash.'" *Id.* at 28–29 (quoting Ex. 1049 ¶ 3). But, Patent Owner argues, "[s]uch strobing or flashing beacons are not intended to illuminate or light an area located at a distance from the beacon." *Id.* at 29. According to Patent Owner, "[s]ince Burton's warning beacon cannot light an area located at a distance from the beacon, Burton's 'LED light unit' cannot be an 'illumination device for providing light in an illumination direction.'" *Id.*

At this stage of the proceeding Patent Owner's argument is unavailing on this record because the preamble contains no language precluding the "illumination device" from being a beacon or requiring the illuminating or lighting to be of an area located at a distance. The preamble calls only for an "illumination device" "providing light in an illumination direction."

In our view, at this stage, Petitioner sufficiently shows on this record that Burton teaches this.

> *[1.1] a central body having a surface facing the illumination direction and including a first heat dissipating mechanism for allowing heat to dissipate through a central portion of the central body;*

Petitioner contends that Burton teaches a central body that includes a first heat dissipating mechanism for allowing heat to dissipate through a central portion of the central body. Pet. 17.

To show this, Petitioner provides an annotated version of Burton Figs. 5 and 8, reproduced below.

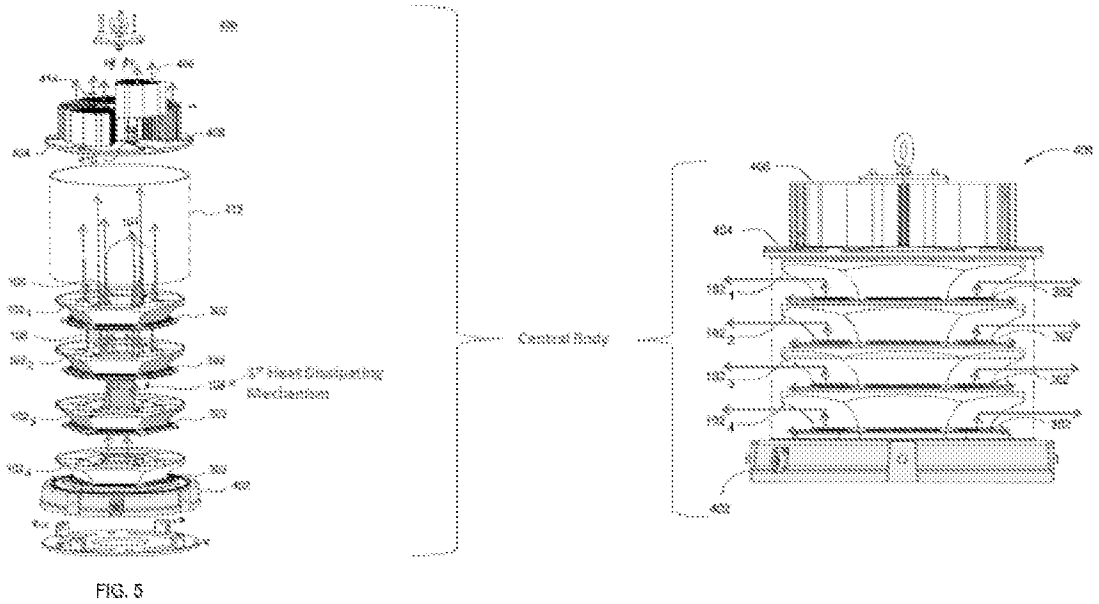

Petitioner's annotated version of Burton Fig. 5 (on the left) showing an exploded view of LED light unit 400 and Burton Fig. 8 (on the right) depicting a fully assembled LED light unit 400 with blue arrows to indicate "light outward." Shaded in green is "base 402" and shaded in yellow is "heat sink 406." Pet. 17; Ex. 1049, Figs. 5, 8, ¶¶ 46, 50.

According to Petitioner, Burton depicts, *inter alia*, a "center column 108 … constructed from a thermally conductive material such as, for example, copper, aluminum and the like." Pet. 18 (citing Ex. 1049, ¶¶ 24, 49). This "center column," according to Petitioner, "dissipates heat (represented by the red directional arrows) through a central portion of the central body. The 'center column' is a first heat dissipating mechanism." Pet. 18 (emphasis omitted) (citing Ex. 1003 ¶¶ 120–122).

Patent Owner has not responded to Petitioner's challenge as to the "first heat dissipating" limitation of [1.1]. *See* generally Prelim. Resp. 28–32.

Regarding the "central body having a surface facing the illumination direction" limitation of [1.1], Petitioner contends that, as shown in its annotated version of Fig. 5 of Burton reproduced above, "the central body includes a 'base 402' (shaded green) or 'heat sink 406' (shaded yellow) which has a surface facing an illumination direction." Pet. 17 (citing Ex. 1003 ¶ 121).

Patent Owner disagrees, arguing, *inter alia*, that "'base 402' and 'heat sink 406' are not required by nor central to any portion of Burton's light unit." Prelim. Resp. 30. Because they "are not central to Burton's light unit and [they] cannot form part of a central body as recited in Claim 1." *Id.* at 31.

At this stage of the proceeding, Patent Owner's argument is unavailing.

If the central body is designated as that portion of Burton's lighting unit as depicted in Petitioner's annotated version of Burton Fig. 5 (reproduced above), then it would include "base 402" and "heat sink 406" which, as Petitioner depicts it, have surfaces in the illumination direction (the blue arrows).

To the extent Patent Owner is arguing that "base 402" and "heat sink 406" are not in a central location of the "central body," in the sense that these elements are not inside the "central body," this is not something the claim requires.

In our view, at this stage, Petitioner sufficiently shows on this record that Burton teaches [1.1].

> *[1.2] first and second groups of Light Emitting Diodes (LEDs) connected to the central body directly or via an attachment feature, the first and second group of LEDs being spaced apart from each other;*

Petitioner contends that Burton teaches [1.2] by disclosing "one or more 'LED arrays 302' assembled on an 'LED board 304' (attachment feature) which is then positioned on 'each support plate' (labeled $102_{1–4}$) – i.e. central body." Pet. 19; *see* Petitioner's annotated version of Burton Fig. 5 reproduced above. "Multiple support plates are shown (i.e., 102_1, 102_2, 102_3, etc.) with each including additional 'LED arrays' [302]." *Id.* at 19–20 (citing Ex. 1049 ¶¶ 39–40). According to Petitioner, a given support plate may therefore include two separate "LED arrays." Thus, "a first support plate (e.g., 102_4) may include a first 'LED array' – i.e., a first LED group – and a second support plate (e.g., 102_3) may each include a second LED array – a second LED group." *Id.* at 20 (citing Ex.1003 ¶¶ 124–126).

In our view, at this stage, Petitioner sufficiently shows on this record that Burton teaches [1.2].

> *[1.3] a second heat dissipating mechanism including one or more openings formed in the central body or in the attachment feature;*

Petitioner contends that Burton teaches a second heat dissipating mechanism as claimed via the combination of "support plate 102" and "heat pipe 104" of Burton's central body. Pet. 20; *see* also Petitioner's annotated version of Burton Fig. 5 reproduced above. Petitioner provides an annotated

version of Burton Fig. 3 showing the combination of these elements in more detail. *Id* at 21.

Petitioner explains that "support plate 102" has openings and is constructed from a thermally conductive material. Pet. 20 (citing Ex. 1049 ¶ 20). According to Petitioner, this can operate to dissipate heat generated by the LED arrays. *Id.* "Additionally, the 'support plate 102' includes a 'heat pipe 104' which also cooperates to dissipate heat away from the LEDs and out to the ambient environment." *Id.* at 20–21 (citing Ex. 1049 ¶¶ 42–44). "The support plate in combination with the heat pipes, is *a second heat dissipating mechanism*." *Id.* at 21 (emphasis original).

In our view, at this stage, Petitioner sufficiently shows on this record that Burton teaches [1.3].

> *[1.4] a first reflector extending from the central body adjacent to the first group of LEDs in the illumination direction; and*
>
> *[1.5] a second reflector extending from the central body adjacent to the second group of LEDs for directing light from the second group of LEDs in the illumination direction,*

Petitioner contends that Burton teaches first and second reflectors as claimed. Pet. 21–23. In support, Petitioner provides a second annotated version of Burton Fig. 8 depicting said reflectors with red shading, reproduced below.

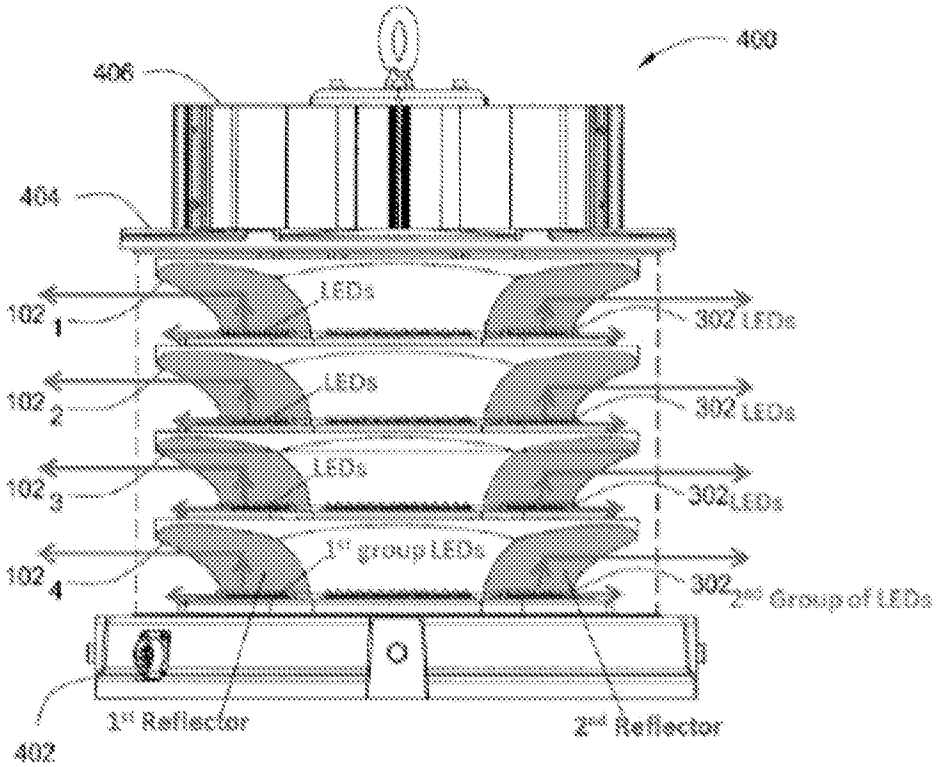

Petitioner's second annotated version of Fig. 8 of Burton depicting a fully assembled LED light unit 400 with blue arrows to indicate "light outward" and first and second reflectors shaded in red. Pet. 22; Ex. 1049, Fig. 8.

According to Petitioner, a "POSITA would understand each support plate forming the central body includes a parabolic shaped first and second reflector (shaded red) adjacent a given LED array (first/second group of LEDs) for directing the light in the illumination direction (as represented by the directional arrow)." Pet. 22 (citing Ex. 1003 ¶¶ 131–133).

Patent Owner argues, *inter alia*, that "the words 'reflect', 'reflector' or 'reflective' do not appear anywhere in Burton." Prelim. Resp. 32.

Patent Owner's argument at this stage of the proceeding is unavailing on this record. Burton discloses that plates 102 may be constructed of "copper, aluminum and the like." Ex. 1049 ¶ 20; Pet. 20. A POSITA would

understand that plates made of such materials would reflect light. This would appear to meet what [1.4] and [1.5] call for; that is, reflectors for directing light in the illumination direction.

In our view, at this stage, Petitioner sufficiently shows on this record that Burton in combination with the knowledge of a POSITA teaches [1.4] and [1.5].

> *[1.6] wherein heat generated by the first and second groups of LEDs is dissipated through the central body via the first heat dissipating mechanism,*

Petitioner contends that Burton teaches [1.6]. Pet. 23–24.

To demonstrate, Petitioner provides annotated versions of Burton Figs. 2 and 5, reproduced below.

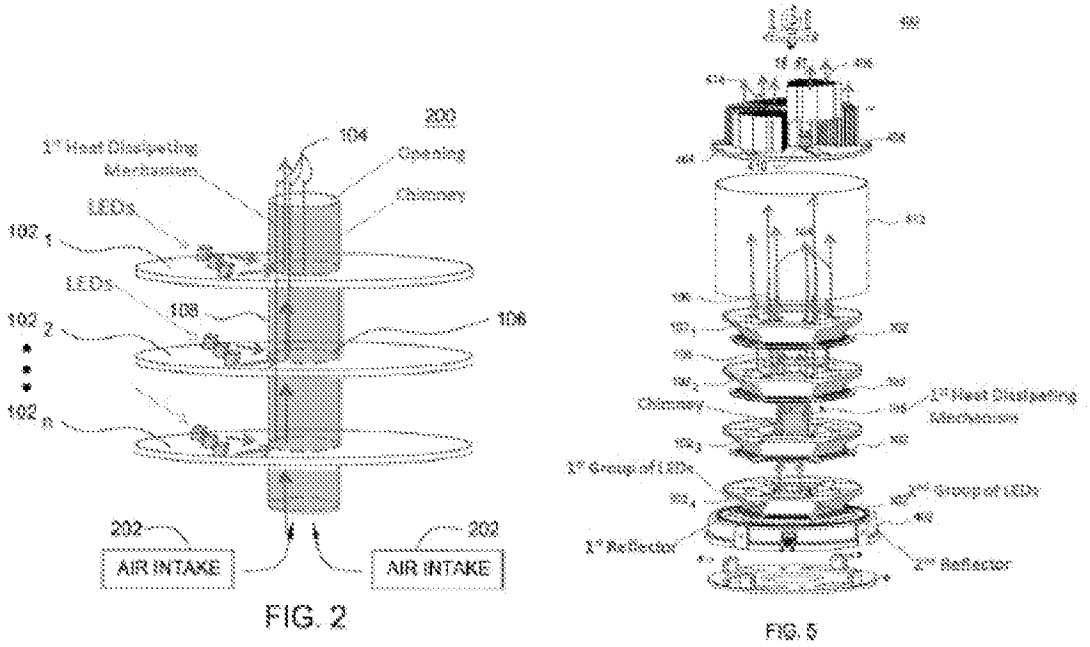

Petitioner's annotated version of Burton Fig. 2 (on the left) showing LED light unit 200 and "at least one air intake 202 to provide greater transfer of heat away from the heat pipes and, therefore, away from the LEDs" and Burton Fig. 5 (on the right) showing an exploded view of Burton's LED light unit 400. Pet. 24; Ex. 1049, Figs. 2, 5, ¶¶ 32, 50.

According to Petitioner, the red arrows in its annotated version of Burton Fig. 2 reproduced above show heat "dissipated inward from LEDs arrays 302 from the 'support plate 102' and 'heat tubes 104' to the 'center column 108' – i.e., first heat dissipating mechanism." Pet. 23. Petitioner explains that the heat generated by the groups of LEDs (302) that is dissipated through the center column 106 is transferred to a series of finned heat sink units (labeled "414") for dissipation to the ambient environment. Pet. 23–24 (citing Ex. 1003 ¶ 136).

In our view, at this stage, Petitioner sufficiently shows on this record that Burton teaches [1.6].

> *[1.7] wherein the one or more openings of the second heat dissipating mechanism provide fluid flow cooling of the first and second groups of LEDs, and*

Petitioner contends that Burton teaches [1.7]. Pet. 24–26.

To supports its contention, Petitioner provides an annotated version of Burton Fig. 3, reproduced below. Petitioner explains that the second heat dissipating mechanism (i.e., the combination of support plate 102 and heat pipe 104 of Burton's central body) provides fluid flow cooling (as shown by the red directional arrows) of the first and second groups of LEDs (302) via openings 310 and 106 and heat pipes 104. Pet. 24 (citing Ex. 1003 ¶ 138).

In our view, at this stage, Petitioner sufficiently shows on this record that Burton teaches [1.7].

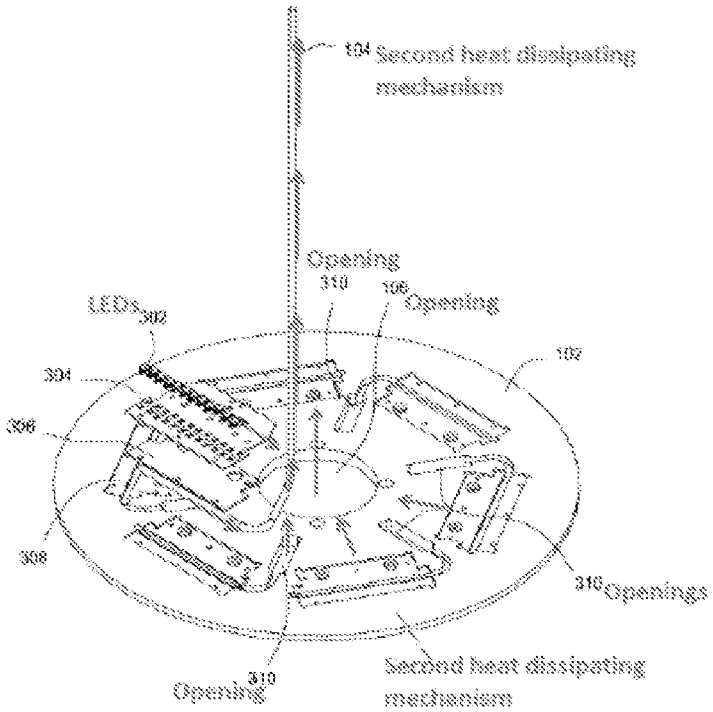

FIG. 3

Petitioner's annotated version of Burton Fig. 3 showing support plate 102 and heart pipe 104. Pet. 25; Ex. 1049, Fig. 3, ¶ 32.

> *[1.8] wherein one of the first and second heat dissipating mechanisms allows heat to dissipate between the first and second reflectors.*

Petitioner contends that Burton teaches [1.8.] Pet. 26.

Relying on the annotated version of Burton Fig. 5, reproduced above, Petitioner explains that "[t]he heat generated by the first/second LEDs (red directional arrows) is dissipated by the 'updraft' of cooling air through the first mechanism ('center column 108') which is located between the first/second reflectors." Pet. 26 (citing Ex.1049 ¶¶ 27–28). "[T]he second mechanism ('support plate 102' and 'heat pipe 104') likewise operate[s] to dissipate heat through the center column and [is] therefore also disposed between the first/second reflectors." Pet. 26 (citing Ex. 1003 ¶¶ 140–141).

In our view, at this stage, Petitioner sufficiently shows on this record that Burton teaches [1.8].

3. Conclusion as to claim 1

On this record, Petitioner has demonstrated a reasonable likelihood of prevailing in demonstrating that claim 1 of the ’114 patent is taught or rendered obvious over Burton and the knowledge of a POSITA.

4. Dependent claims 2–17 and 19

Petitioner argues that dependent claims 2–17 and 19 are also taught or rendered obvious over Burton and the knowledge of a POSITA. Pet. 27–35.

Along with our reasons discussed with respect to the challenge of claim 1, we are persuaded that the evidence relied upon by Petitioner sufficiently supports Petitioner’s contentions regarding claims 2–17 and 19.

Patent Owner does not provide any specific arguments challenging Petitioner’s patentability position as to these claims. *See* Prelim. Resp. 28–32.

At this stage, on this record, Petitioner has demonstrated a reasonable likelihood of prevailing in demonstrating that dependent claims 2–17 and 19 of the ’114 patent are taught or rendered obvious over Burton and the knowledge of a POSITA.

H. Ground II: Schuknecht, Hsu, Leong, and the knowledge/skill of a POSITA

Petitioner challenges claims 1–14, 16, 18, and 19 as unpatentable under 35 U.S.C. § 103(a) over the combination of Schuknecht, Hsu, Leong, and a POSITA. Pet. 35–65.

At this stage of the proceeding, it is unnecessary for us to provide an assessment of claims 1–14, 16, and 19 under this ground because Petitioner has demonstrated a reasonable likelihood of success in demonstrating that at least one of the challenged claims 1–17, and 19 of the '114 patent is unpatentable under Ground I. *See* 37 C.F.R. § 42.108(a).

However, this ground includes claim 18, which is not included in Ground I. Since claim 18 depends from claim 1, we will analyze Petitioner's position as to claim 1 in order to determine whether Petitioner has demonstrated a reasonable likelihood of prevailing in demonstrating that dependent claim 18 is taught or rendered obvious over Schuknecht, Hsu, Leong, and the knowledge/skill of a POSITA.

1. Independent claim 1 and dependent claim 18

Petitioner's basic position is that Schuknecht teaches the device of claim 1 but for LEDs, for which Hsu, Leong, and the knowledge of a POSITA are relied upon. Pet. 35–51.

Petitioner acknowledges that "Schuknecht's light fixture is designed to receive and use '*compact fluorescent bulbs*' or CFLs." Pet. 38 (citing Ex. 1041 ¶ 2), emphasis added. This differs from the claimed illumination device which uses LEDs. *See* [1.2]. To fill the missing disclosure of LEDs, Petitioner relies on Hsu's disclosure of LEDs (Pet. 40–41 (citing Ex. 1024 ¶¶ 18–19)), Leong's disclosure of circuitry for mounting an LED lamp to a

fluorescent lamp fixture (*id.* at 39–40 (citing Ex. 1051, 4:51–54; Ex. 1003 ¶ 179)), and the knowledge of a POSITA of, for example, improved energy efficiency and longer life expectancy of LED lamps over fluorescent lamps (*id.* (citing Ex. 1003 ¶ 181)).

Petitioner argues, *inter alia*, that it would have been obvious to a POSITA to replace Schuknecht's fluorescent light with an LED lamp bulb like that taught in Hsu "as this would provide a lighting source that is energy efficient, has a longer life expectancy, would have zero disposal costs, and be constructed using no hazardous chemicals." Pet. 63–64 (citing Ex. 1003 ¶ 225).

To illustrate, Petitioner provides a figure, reproduced below, that combines annotated versions of Schuknecht Fig. 22 (top) showing a lamp chamber 122 housing fluorescent bulbs 16 (shaded in purple and light blue) and Hsu Fig. 5 (bottom, shown twice) showing two LED bulbs with red arrows extending from Hsu's LED bulbs to Schuknecht's fluorescent bulbs to indicate replacing Schuknecht's fluorescent bulbs with Hsu's LEDs. Ex. 1041, Fig. 22, ¶ 86; Ex. 1024, Fig. 5, ¶ 22.

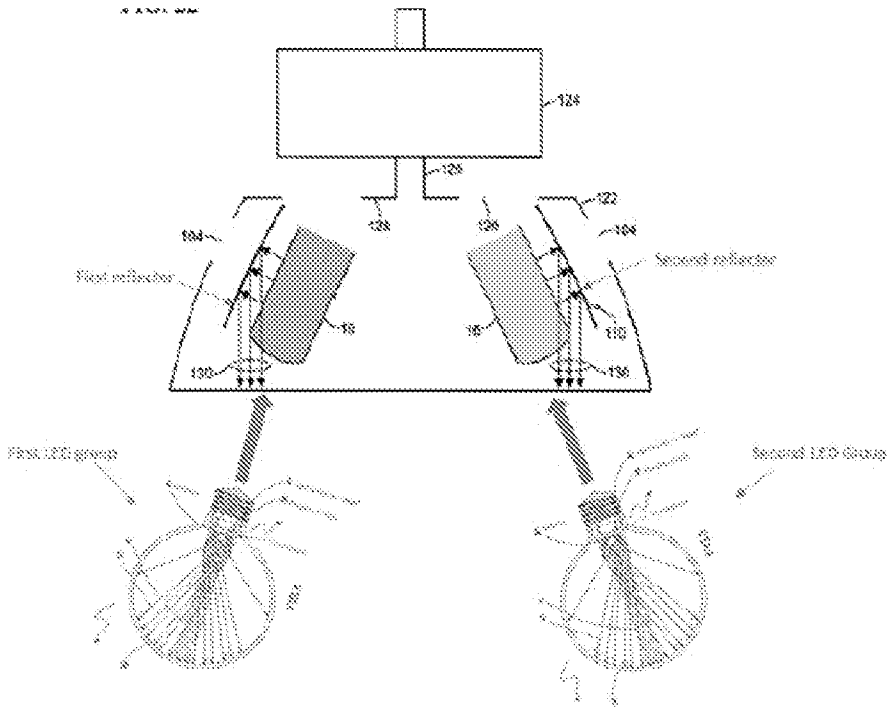

Petitioner's combined annotated versions of Schuknecht Fig. 22 (top) showing a lamp chamber 122 housing fluorescent bulbs 16 (shaded in purple and light blue) and Hsu Fig. 5 (bottom, shown twice) showing two LED bulbs with red arrows extending from Hsu's LED bulbs to Schuknecht's fluorescent bulbs to indicate replacing Schuknecht's fluorescent bulbs with Hsu's LEDs.

We have considered Petitioner's position, but, in our view, the reasoning Petitioner provides for why the claimed device would have been obvious to one of ordinary skill in the art over the combination of Schuknecht, Hsu, Leong, and the knowledge of a POSITA is insufficient. Obviousness requires showing that a POSITA would have had a motivation to combine Schuknecht, Hsu, Leong, and the knowledge of a POSITA in the way required to achieve the claimed device *and would have had a reasonable expectation of success in doing so*. *PAR Pharmaceutical, Inc. v. TWI Pharmaceuticals, Inc.*, 773 F.3d 1186, 1196 (Fed. Cir. 2014) (emphasis added). Rather than explaining why one would have included LEDs in

Schuknecht's device with a reasonable expectation of success at arriving at the claimed device, Petitioner explains why a POSITA could have generally substituted fluorescent bulbs for LEDs.

Schuknecht is directed to an air flow management specifically designed for vent chambers containing high wattage lamps such as fluorescent lamps. *See* Ex. 1041 ¶¶ 2 ("The devices presented here are directed to a compact fluorescent lamp ('CFL') type lighting fixture that has improved cooling capability."), 7 (The invention "is primarily, but not exclusively, directed at CFL fixtures where the sum of wattage of all of the lamps in the fixture exceeds 200 watts."). We agree with Patent Owner that

> Petitioners do not provide any argument that an optimal temperature of an LED bulb matches that of a CFL fixture. Nor do Petitioners provide any argument that an LED bulb, as disclosed by Hsu, might generate output in excess of 200 watts/fixture, as required by Schuknecht.

Prelim. Resp. 38 (citing Ex. 1041 ¶¶ 4–7). Petitioner does not address why a POSITA would have modified Schuknecht's vent chamber that is specifically designed for managing heat associated with using fluorescent bulbs to manage heat from LEDs, if any, with a reasonable expectation of success in arriving at the claimed illumination device.

For that reason, a reasonable likelihood of prevailing in demonstrating that claim 1 is unpatentable under 35 U.S.C. § 103(a) over the combination of Schuknecht, Hsu, Leong, and the knowledge of a POSITA on this record has not been demonstrated.

2. Conclusion

For the foregoing reasons, we determine that on this record Petitioner has not demonstrated a reasonable likelihood of prevailing in demonstrating

that claim 1 is unpatentable under 35 U.S.C. § 103(a) over the combination of Schuknecht, Hsu, Leong, and the knowledge of a POSITA.

Because claim 18 depends from claim 1 and Petitioner's discussion of claim 18 does not include reasoning for why a POSITA would replace or include LEDs in Schuknecht's lamp fixture specifically designed to vent high wattage fluorescent lamps and reasonably expect to successfully arrive at the claimed illumination device, we reach the same determination as to claim 18. Pet. 61–62.

I. Ground III: Hashimoto, Baek and the knowledge of a POSITA

Petitioner challenges claims 1, 3–12, 14, and 17–19 as unpatentable under 35 U.S.C. § 103(a) over the combination of Hashimoto, Baek, and the knowledge of a POSITA. Pet. 66–86.

At this stage of the proceeding, it is unnecessary for us to provide an assessment of claims 1, 3–12, 14, 17, and 19 under this ground because Petitioner has demonstrated a reasonable likelihood of success in demonstrating that at least one of the challenged claims 1–17, and 19 of the '114 patent is unpatentable under Ground I. *See* 37 C.F.R. § 42.108(a).

However, this ground includes claim 18 which is not included in Ground I. Since claim 18 depends from claim 1, we will analyze Petitioner's position as to claim 1 in order to determine whether Petitioner has demonstrated a reasonable likelihood of prevailing in demonstrating that dependent claim 18 is taught or rendered obvious over Hashimoto, Baek and the knowledge of a POSITA.

1. Independent claim 1 and dependent claim 18

Petitioner's basic position is that Hashimoto teaches the device of claim 1 but for the "first and second groups of Light Emitting Diodes (LEDs) connected to the central body directly or via an attachment feature, the first and second group of LEDs being spaced apart from each other" [1.2], for which Baek and the knowledge of a POSITA are relied upon. Pet. 35–51.

Petitioner acknowledges that "Hashimoto discloses a plurality of 'six power LEDs 10' mounted to a 'PC [Power Circuit] board 20.'" Pet. 68 (citing Ex. 1052, 2:62–64). This is depicted in Hashimoto Fig. 1, reproduced in the Petition and below. Ex. 1052, Fig. 1; Pet. 68.

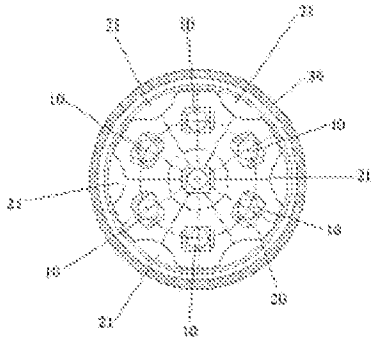

Fig 1

Hashimoto Fig. 1 showing six power LEDs mounted on an LED Power Circuit (PC) board.

As depicted in Hashimoto Fig. 1 reproduced above, Hashimoto's six LEDs are spaced equidistant from each other. This differs from the claimed illumination device which requires two groups of LEDs spaced apart from each other.

To modify Hashimoto to satisfy the claim, Petitioner relies on Baek's disclosure; that is, "Baek describes a generic 'Prior Art' LED package that includes three 'LEDs 130' (a plurality of LEDs) located and surrounded by a conical 'reflector 120.'" Pet. 68 (quoting Ex. 1053 ¶ 23, citing Ex. 1003 ¶¶ 231–233). This is depicted in Baek Fig. 1, reproduced in the Petition and below. Ex. 1053, Fig. 1; Pet. 69.

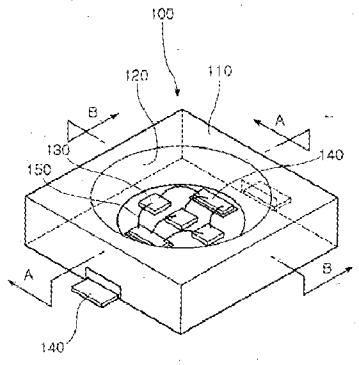

Prior art
FIG. 1

Baek Fig. 1 showing a conventional high power LED package with LED chips 130 are mounted inside reflector 120.

According to Petitioner, "[o]nce modified, Hashimoto would include six LED packages each having 3 LEDs apiece," thereby meeting the claimed LED arrangement. Pet. 71.

Petitioner reasons that a "POSITA would have understood Baek's [prior art] LED package would provide a greater lumen output (i.e., more light) due to the plurality of LEDs included." Pet. 69 (citing Ex. 1003 ¶ 235). "A POSITA would have understood it to be desirable to have a brighter and more directed lighting when used in applications like that disclosed by Hashimoto – e.g., illuminating merchandise in jewelry stores." *Id.* at 70 (citing Ex. 1003 ¶ 235).

However, Petitioner does not explain why a POSITA would have modified Hashimoto to include the prior art package described in Baek so as to position LEDs in Hashimoto's device in the arrangement claimed (i.e., "the first and second group of LEDs being spaced apart from each other" [1.2]) with a reasonable expectation of success.

Hashimoto is directed to illuminating with LEDs. An object is "to provide to a power LED lighting assembly which provides high brightness illumination without changes in the expected color temperature and color performance of its power LEDs." Ex. 1052, 1:43–46.

Baek discloses that the prior art LED package (illustrated in Fig. 1, reproduced above) includes "lights emitted from adjacent ones of the LED chips 130, 230 [which] *interfere with each other, thereby degrading light efficiency*. Ex. 1053 ¶ 28 (emphasis added).

> In addition, the high power LED package 100, 200 where several LED chips are mounted have some elements resistant against the LED chips 130, 230, which cause *power loss while hindering heat dissipation*. The conventional LED package 100, 200 has poor heat dissipating efficiency since the LED chips are mounted inside the reflector of the lead frame.
>
> That is, in a case where several LED chips are mounted inside one molding, a larger amount of heat is emitted but *heat dissipation efficiency is rather low*.

Id. at ¶¶ 30–31(emphasis added).

Petitioner does not explain why a POSITA would arrange LEDs in Hashimoto consistent with the prior art package discussed in Baek when, according to Baek, they would "interfere with each other," "degrad[e] light efficiency," and "hinder[] heat dissipation." Ex. 1053 ¶¶ 28, 30–31. Petitioner's reasoning for combining Hashimoto and Baek in arriving at the

claimed device with a reasonable expectation of success is substantially undermined by Baek's criticism of the prior art LED arrangement. We agree with Patent Owner that "Petitioners fail to note Baek's explicit criticism of such 'prior art' LED package." Prelim. Resp. 43.

Because Petitioner does not address Baek's criticism, a reasonable likelihood of prevailing in demonstrating that claim 1 is unpatentable under 35 U.S.C. § 103(a) over the combination of Hashimoto, Baek, and the knowledge of a POSITA on this record has not been demonstrated.

2. Conclusion

For the foregoing reasons, we determine that on this record Petitioner has not demonstrated a reasonable likelihood of prevailing in demonstrating that claim 1 is unpatentable under 35 U.S.C. § 103(a) over the combination of Hashimoto, Baek, and the knowledge of a POSITA.

Because claim 18 depends from claim 1 and Petitioner's discussion of claim 18 does not include reasoning for why a POSITA would arrange LEDs in Hashimoto consistent with a prior art package described in Baek, notwithstanding Baek's criticism, and reasonably expect to successfully arrive at the claimed illumination device, we reach the same determination as to claim 18. Pet. 85–86.

III. NOTICES

The Board shall deem waived any issue not raised in a timely response to the Petition, or as permitted in another manner during trial, even if asserted in the Preliminary Response or discussed in this Decision.

Nothing in this Decision authorizes Petitioner, in a manner not otherwise permitted by the Board's rules, to supplement the information supporting any ground advanced in the Petition.

IV. CONCLUSION

For the foregoing reasons, we determine that Petitioner has demonstrated a reasonable likelihood that it would prevail in showing the unpatentability of at least one of claims 1–19 of the '114 patent. Accordingly, we grant the Petition and institute an *inter partes* review of the '114 patent.

Because a decision to institute is "a simple yes-or-no institution choice respecting a petition, embracing all challenges included in the petition," *PGS Geophysical AS v. Iancu*, 891 F.3d 1354, 1360 & n.2 (Fed. Cir. 2018) (citing *SAS Inst., Inc. v. Iancu*, 138 S. Ct. 1348, 1359–60 (2018) and corresponding USPTO Guidance, https://www.uspto.gov/patents-application-process/patent-trial-and-appeal-board/trials/guidance-impact-sas-aia-trial (Apr. 26, 2018)), and because we have determined that at least one ground set forth in the Petition satisfies the threshold for institution, trial is instituted on the proposed grounds based on Burton, Schuknecht, Hsu, Leong, Hashimoto, Baek, and knowledge of a POSITA.

IV. ORDER

It is hereby:

ORDERED that, pursuant to 35 U.S.C. § 314(a), *inter partes* review of claims 1–19 of the '114 patent is instituted with respect to all grounds set forth in the Petition; and

FURTHER ORDERED that, pursuant to 35 U.S.C. § 314(c) and 37 C.F.R. § 42.4(b), *inter partes* review of claims 1–19 of the ’114 patent shall commence on the entry date of this Order, and notice is hereby given of the institution of *inter partes* review.

PETITIONER:

John P. Rondini
Frank A. Angileri
Thomas W. Cunningham
Corey J. Neil
Kyle G. Konz
BROOKS KUSHMAN P.C.
jrondini@brookskushman.com
fangileri@brookskushman.com
tcunningham@brookskushman.com
cneil@brookskushman.com
kkonz@brookskushman.com

PATENT OWNER:

Shaun D. Gregory
Richard E. Gaum
TAFT STETTINIUS & HOLLISTER LLP
sgregory@taftlaw.com
egaum@taftlaw.com