(12) INTERNATIONAL APPLICATION PUBLISHED UNDER THE PATENT COOPERATION TREATY (PCT)

(19) World Intellectual Property Organization
International Bureau

(43) International Publication Date
21 June 2001 (21.06.2001)

PCT

(10) International Publication Number
WO 01/44145 A1

(51) International Patent Classification[7]: C07C 1/24, 11/02

(21) International Application Number: PCT/FI00/01089

(22) International Filing Date:
14 December 2000 (14.12.2000)

(25) Filing Language: Finnish

(26) Publication Language: English

(30) Priority Data:

19992683	14 December 1999 (14.12.1999)	FI
19992684	14 December 1999 (14.12.1999)	FI

(71) Applicant *(for all designated States except US)*: **FORTUM OIL AND GAS OY** [FI/FI]; P.O. Box. 310, FIN-06101 Porvoo (FI).

(72) Inventors; and
(75) Inventors/Applicants *(for US only)*: **TIITTA, Marja** [FI/FI]; Prosessitie 1 As 12, FIN-06850 Kulloo (FI). **TURUNEN, Helka** [FI/FI]; Kärjätalontie 5, FIN-06100 Porvoo (FI). **AITTAMAA, Juhani** [FI/FI]; Parikkalantie 22, FIN-00920 Helsinki (FI). **ILME, Jarno** [FI/FI]; Myrttitie 12 B 3, FIN-00720 Helsinki (FI). **ISOKOSKI, Kaija** [FI/FI]; Huhtisentie 2 As 1, FIN-06100 Porvoo (FI). **KYTÖKIVI, Arla** [FI/FI]; Caloniuksenkatu 3 A 15, FIN-00100 Helsinki (FI). **KYLMÄMETSÄ, Harri** [FI/FI]; YO-kylä 8d 15, FIN-20540 Turku (FI). **LAKOMAA, Eeva-Liisa** [FI/FI]; Nöykkiönpuro 14, FIN-02300 Espoo (FI). **LINDBLAD, Marina** [FI/FI]; Kankurinkatu 4 A 14, FIN-00150 Helsinki (FI). **HÖLSÄ, Jorma** [FI/FI]; Tunturikatu 14 B 44, FIN-00100 Helsinki (FI).

(74) Agent: **FORSSÉN & SALOMAA OY**; Yrjönkatu 30, FIN-00100 Helsinki (FI).

[Continued on next page]

(54) Title: METHOD FOR THE MANUFACTURE OF OLEFINS

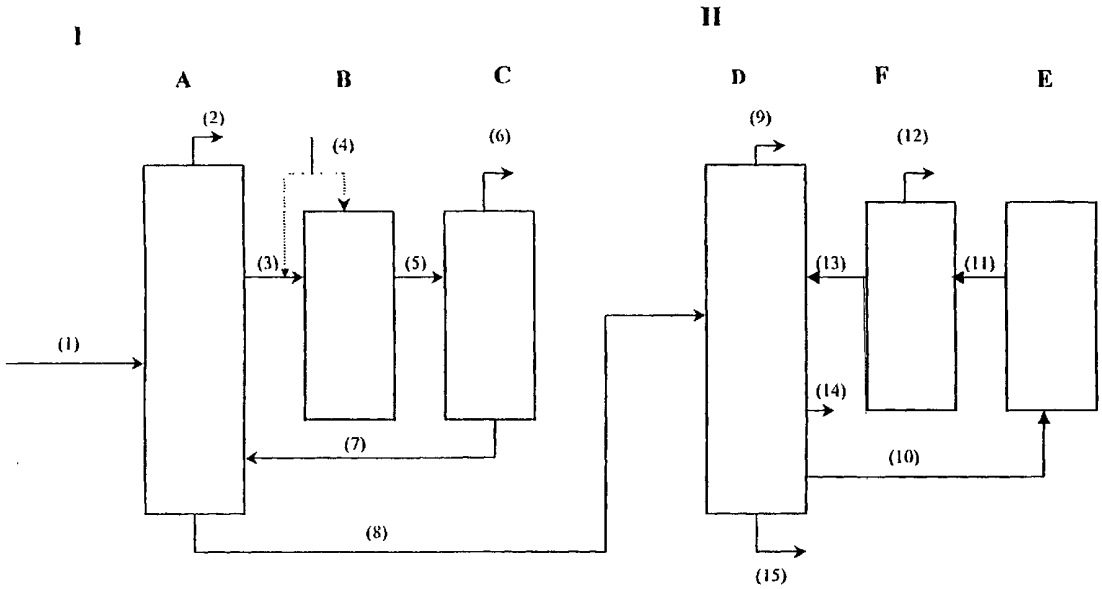

(57) Abstract: The invention relates to a process for producing olefins, comprising the following steps: a) oxidation of an aliphatic hydrocarbon component to give the corresponding alcohol, b) dehydration of the alcohol to produce the corresponding olefin. The invention is further related to a process for oxidating aliphatic hydrocarbons wherein a linear or branched aliphatic C_4-C_{40} hydrocarbon is fed as a stream (1) into a separation zone (A) and removed therefrom as a side stream (3), an oxidating agent (4) being added to said side stream (3) and the mixture obtained being passed into the reaction zone (B), or the oxidating agent being directly added into the reactor, and thereafter, the reactor product is circulated from the reactor within a stream (7) back to the reaction zone (A), in which it is recovered as the bottom product (8). The invention is moreover directed to a process for dehydrating alcohols to produce olefins, wherein said alcohol is passed as a stream (8) into the separation zone (D) and passed therefrom as a side stream (10) into a reaction zone (E), and then the products of the reactor are passed into a gas separation zone (F), in which the gaseous products are separated as a stream (12) from the reactor products being circulated as a distillate stream (13) back to the zone (D). In the process, a primary or secondary alcohol is preferably dehydrated by means of a zirconia/support catalyst prepared with atomic layer epitaxial technique.

WO 01/44145 A1

Symrise AG, EX1035
Symrise AG v. Inolex Inc.
IPR2023-01035

(81) **Designated States** *(national)*: AE, AG, AL, AM, AT, AT (utility model), AU, AZ, BA, BB, BG, BR, BY, BZ, CA, CH, CN, CR, CU, CZ, CZ (utility model), DE, DE (utility model), DK, DK (utility model), DM, DZ, EE, EE (utility model), ES, FI, FI (utility model), GB, GD, GE, GH, GM, HR, HU, ID, IL, IN, IS, JP, KE, KG, KP, KR, KZ, LC, LK, LR, LS, LT, LU, LV, MA, MD, MG, MK, MN, MW, MX, MZ, NO, NZ, PL, PT, RO, RU, SD, SE, SG, SI, SK, SK (utility model), SL, TJ, TM, TR, TT, TZ, UA, UG, US, UZ, VN, YU, ZA, ZW.

(84) **Designated States** *(regional)*: ARIPO patent (GH, GM, KE, LS, MW, MZ, SD, SL, SZ, TZ, UG, ZW), Eurasian patent (AM, AZ, BY, KG, KZ, MD, RU, TJ, TM), European patent (AT, BE, CH, CY, DE, DK, ES, FI, FR, GB, GR, IE, IT, LU, MC, NL, PT, SE, TR), OAPI patent (BF, BJ, CF, CG, CI, CM, GA, GN, GW, ML, MR, NE, SN, TD, TG).

Published:

— *With international search report.*

For two-letter codes and other abbreviations, refer to the "Guidance Notes on Codes and Abbreviations" appearing at the beginning of each regular issue of the PCT Gazette.

Method for the manufacture of olefins

Fuels used in vehicles such as gasoline and diesel fuel contain considerable amounts of olefins. In addition, olefins are important intermediates in chemical industry.

The present invention relates to a process for producing olefins, particularly α-olefins wherein in the first step of the process, paraffin is oxidized to alcohol, and in the second step, this alcohol is dehydrated to give olefin.

Olefins, for instance α-olefins may be produced from long chain paraffins such as from decane by first selectively oxidizing the paraffins to alcohols, and thereafter by dehydrating these alcohols to corresponding α-olefins. A drawback of the conventional oxidation process is the poor selectivity of the reaction. Varying amounts of n-paraffins are present in the process streams of an petroleum refinery depending on the type of the crude oil used, however only as dilute solutions. 1-decene belonging to the family of α-olefins may further be used as a starting material for poly-α-olefins.

Linear α-olefins are produced from ethylene by catalytic oligomerization. The oligomerization of ethylene may be carried out either by stochiometrically extending the chains with aluminium alkyls followed by separation of the α-olefins from aluminium, or by catalytically extending the chains with aluminium alkyls by means of nickel ligand, or modified zirconium catalysts. At present, the price of linear α-olefins is mainly determined by the price of ethylene.

A process of producing normal α-olefins is presented in *WO93/21136*. In this process, a trialkyl aluminium compound and ethylene are contacted with each other at

conditions suitable for the formation of α-olefins to give a mixture comprising normal α-olefins, and trialkyl or higher aluminium compounds. Thereafter, at least part of this mixture and a sufficient amount of ethylene are contacted with each other in the presence of a *trans*alkylation catalyst containing a metal from Group VIII to *transalkylate* these trialkyl or higher aluminium compounds. The product thus obtained is further contacted with a sufficient amount of sodium hydroxide, and water.

Conventional olefins based on paraffins may also be produced with a chlorination – dehydrochlorination process, wherein C_{11} – C_{14} n-paraffins are typically chlorinated in a fluidized bed reactor at an elevated temperature with low conversions to prevent the formation of di- and trichlorinated alkanes. Monoclorinated alkane obtained as the main product is dehydrochlorinated at an elevated temperature by using a catalyst to give linear olefins as the product. Compounds containing chlorine are necessary in this chlorination, and moreover, di- and trichlorinated alkanes may be formed as by-products. These compounds are always harmful to the environment and may by a health risk to the operating personnel.

The major part of olefins is produced by catalytic cracking of the hydrocarbon feed in oil refineries. Patent publication *FI-101156* discloses a method for the conversion of hydrocarbons wherein a gaseous or liquid hydrocarbon feed is passed to a circulating mass fluidized stream reactor, in which it is converted at an elevated temperature by the catalyst to form desired products. Among others, this publication presents a catalytic cracking using light gas oil, heavy gas oil, or light bottom oil as the feed giving light olefins and gasoline as the product. Another process presented is the thermal cracking wherein bottom oils and other heavy feed materials containing hydrocarbons and high amounts of volatile substances are used as the feed to produce light olefins, gasoline and gas oil. With this method, a mixture of olefins is always produced.

Technology based on ethylene as the starting material allows the selective production of α-olefins that are, however, in the form of an α-olefin mixture, from which the components may be separated for instance by distillation. Linear olefins may be produced from paraffins with the chlorination – dehydrochlorination process. Disadvantages of the technology are the necessary additives used in the process and the possible by-products that are harmful both to people and to the environment. A particular olefin may not be produced selectively with this cracking technology.

As is known, olefins may also be produced by dehydrating alcohols. In this reaction, which is carried out at atmospheric pressure and at a temperature between 100 and 350 °C, the alcohol gives olefin and water. An aluminium oxide catalyst has been in use for a long time in the production of olefins from alcohols. The use of several other catalyst materials such as zeolites and magnesium sulphate is also already known. Dehydration of alcohols with catalysts based on oxides is a widely studied field. The production of styrene from phenyl ethanol using TiO_2/Al_2O_3 as the catalyst may be mentioned as an example of an industrial process wherein the basic reaction is the dehydration of alcohol. Also ethylene may be produced by dehydrating ethanol using aluminium oxide modified with sodium as the catalyst.

The formation of olefins from alcohols is a complex reaction with several reversible parallel and secondary reactions including the formation of alkenes from the alcohol through an ester intermediate, the formation of ethers from the alcohols, and the possible disproportioning of ethers to give alkenes and alcohols. The reaction paths are influenced by the reacting alcohols, the properties of the catalysts and the reaction conditions. The activity of the catalyst relative to the formation of olefins and ethers also depends on the reaction temperature. Lower temperatures normally favour the formation of ethers, whereas higher temperatures are favourable for the formation of olefins.

Published application *JP 07-132 225* describes a method for producing olefins by dehydrating an alcohol be means of a supported ZrO_2 catalyst. The catalyst was prepared by fixing zirconium oxide sol onto a support such as aluminium oxide, silica or titaniumdioxide by spraying the sol suspension, or immersing the support into the sol followed by heating the dried supported catalyst at 350 – 850 °C. The catalyst obtained having a high mechanical strenght is suitable for the dehydration of cyclic and tertiary alcohols such as 1-cyclohexyl ethanol and *tert*-butyl alcohol.

Published application *EP 0 150 832* discloses a method for producing terminal olefins by dehydrating alcohols by means of zirconium oxide catalysts. Zirconium oxide is prepared by calcinating a zirconium compound at a temperature varying from 300 to 1500 °C.

Problems related to the processes of the prior art for producing α-olefins from alcohols, and the catalysts used therein, include the impurities of the α-olefin products if 1- or 2-alcohols are used as starting materials, and the poor selectivity of the current γ-aluminium oxide catalysts modified with sodium. Some of the drawbacks of the commercial zirconium oxide catalyst are its poor mechanical strength and low activity relative to the dehydration of alcohols at lower temperatures, whereas at higher temperatures, great amounts of by-products are formed.

Publication of Kytökivi A, Lakomaa E-L, Root A, Österholm H, Jacobs J-P, Brongersma H.H.: "Sequential Saturating Reactions of $ZrCl_4$ and H_2O Vapors in the Modification of Silica and γ-Alumina with ZrO_2, *Langmuir 1997, 13, 2717 – 2725*, describes a method for producing zirconium oxide on γ-aluminium oxide support from $ZrCl_4$ and water by using the atomic layer epitaxial technique (ALE).

There now appears a need for a process for producing olefins wherein one could utilize the paraffins present in the process streams of refineries.

An object of the invention is to provide a process for producing olefins by using corresponding paraffins as starting materials. Another object of the invention is to provide a process for producing C_6-C_{12} olefins, particularly α- and β-olefins. Still another object of the invention is to provide a process for producing 1-decene. An object of the invention is further to provide a process for oxidizing aliphatic hydrocarbons to give 1- or 2-alcohols. Another object of the invention is to provide a process for dehydrating aliphatic 1- or 2-alcohols to produce corresponding α-olefins.

The characteristic features of the process according to the invention for producing olefins the process according to the invention for producing C_6-C_{12} olefins, particularly α- and β-olefins, the process according to the invention for producing 1-decene, the process according to the invention for oxidizing aliphatic hydrocarbons, and the process according to the invention for dehydrating aliphatic 1- or 2-alcohols are presented in the appended claims.

It has now been found that the above objects may be attained with the method according to the invention wherein a combination of a reactor and an distillation device may be utilized. In the first step of the method of the invention, an aliphatic hydrocarbon is oxidized to form a 1- or 2-alcohol, aldehyde, ketone or acid or another product heavier than the starting material. In the second step, this oxidation product is dehydrated to give the olefin. The starting material in the process is an aliphatic hydrocarbon component or a mixture comprising an aliphatic hydrocarbon, preferably a linear or branched C_4-C_{40} aliphatic hydrocarbon, more preferably a C_6-C_{12} hydrocarbon such as paraffin. This paraffin is produced with any suitable method, or it is obtained from the process streams of the petroleum refinery. The aliphatic hydrocarbon

component such as paraffin may be separated from petroleum fractions with any suitable method, preferably using a process consisting of distillation and adsorption steps.

Any additives and apparatuses known in the art suitable for oxidation and dehydration may be used in the process of the invention. The apparatus comprises in the oxidation section I the required: a separation zone A, preferably a distillation device, a reaction zone B, preferably a fixed bed reactor, a mixing tank reactor, fermentor or a trickle layer reactor, a gas separation zone C, preferably an evaporator, and optionally additional devices known in the art. The separation zone A may also be integrated with the reaction zone B to form a reactive distillation zone. The dehydration section II comprises the product and a separation zone D, preferably a distillation device, a reaction zone E, preferably a fixed bed reactor, mixing tank reactor, fermentor or a trickle layer reactor, a gas separation zone C, preferably an evaporator, and optionally additional devices known in the art.

The process of the invention is schematically illustrated in appended Figures 1 – 3 below.

Figure 1 shows a process for producing olefins.
Figure 2 shows a process for oxidizing aliphatic hydrocarbons.
Figure 3 shows a process for dehydrating the oxidation products.

The process according to the invention for producing olefins is schematically illustrated in Figure 1.

As is seen in Figure 1, in the first step of the process, in the oxidation section I thereof, an aliphatic hydrocarbon component, preferably a linear or a branched C_4-C_{40} hydrocarbon, is fed as the stream 1 into a separation zone A, preferably a distillation column. Being a lighter component, the hydrocarbon rises in the column upward from

the feed plate, and it is removed therefrom as the side stream 3. The lightest components may be removed at the top of the column as the stream 2 of their own. An oxidating agent 4, preferably air, a mixture of oxygen and nitrogen, hydrogen peroxyde or another reactive compound containing oxygen is added into the side stream 3. The mixture thus obtained is passed into the reaction zone B. Alternatively, the oxidating agent may be directly added into the reaction zone.

The oxidation reaction may be carried out either without a catalyst, or in the presence of an oxidation catalyst. In this case, the reaction may be a radical oxidation or an enzymatic oxidation and it may be carried out by using a homogeneous or heterogeneous catalyst, or an enzyme. The alcohol, aldehyde, ketone or acid obtained as the reaction products, the unreacted hydrocarbon and the excess of the reagent are passed as the stream 5 from the reaction zone B to the gas separation zone C. In this zone, the gaseous components 6 are separated from the heavier ones such as from alcohols, aldehydes, ketones or acids that are returned back into zone A (into the column) in the stream 7 and that pass downward in the column and are recovered as the bottoms 8. The side stream 3 taken from the separation zone A and passing into the reaction zone B, preferably into the side reactor, may either be in gas or liquid phase, and accordingly, the reactor may be designed as a gas phase or a liquid phase reactor.

In the second step, the reaction product of the oxidation step is passed as the stream 8 into the separation zone D of the section II of the process. In this zone, alcohol as a heavier component migrates downward from the feed plate and is removed as the side stream 10 that is passed into the reaction zone E, being preferably a dehydration reactor. The olefin obtained as the reaction product, the unreacted starting material such as alcohol, and water are passed as the stream 11 into the gas separation zone F wherein the gaseous products 12 are separated from the reaction product. The stream 13 is returned back to the separation zone D wherein the product, that is the olefin is carried as a lighter component upward in the column and is recovered as distillate 9 at

the top of the column. Correspondingly, the unreacted alcohol is separated in the column from the reaction product and is carried as a heavier component to the side outlet 10.

Any products formed in the side and/or secondary reactions during or after the oxidation reaction of the first step are carried into the separation zone D with the stream 8. Aldehydes and ketones may be recovered in the separation zone D as the stream 14 and heavier oxidation products such as acids at the lower part of the separation zone as the stream 15.

It has been found that α-olefins may be selectively produced by dehydrating primary or secondary alcohols having a straight or branced chain by means of an active and α-selective catalyst comprising zirconium oxide on aluminium oxide. The zirconium oxide/aluminium oxide catalyst is preferably prepared from $ZrCl_4$ and water with the known atomic layer epitaxial technique, or by impregnating a zirconium salt, preferably $ZrO(NO_3)_2$ onto aluminium oxide support. The zirconium content of the catalyst is from 0.1 to 50 %, preferably from 5 to 20 %, by weight, the chloride content thereof being typically below 0.3 %, by weight. The support is either γ- or θ-aluminium oxide, preferably θ-aluminium oxide. Suitable alcohols for the dehydration reaction of the invention include primary or secondary aliphatic C_4-C_{40}-alcohols, preferably C_6-C_{12}-alcohols having a straight or a branched chain giving corresponding α-olefins. Preferable alcohols are 1-decanol and 2-octanol. When dehydrating 1-decanol by means of the zirconium oxide/γ-aluminium oxide catalyst, α-olefin may be obtained with a selectivity of above 90 %, the dehydration being preferably carried out in gas phase. In addition, the activity of the catalyst is comparable to that of the commercial γ-aluminium oxide.

Scheme 1 below shows the selectivity of the dehydration of 1-decanol to produce 1-decene as the function of conversion with three different metal oxide catalysts, WHSV being about 6.

Scheme 1

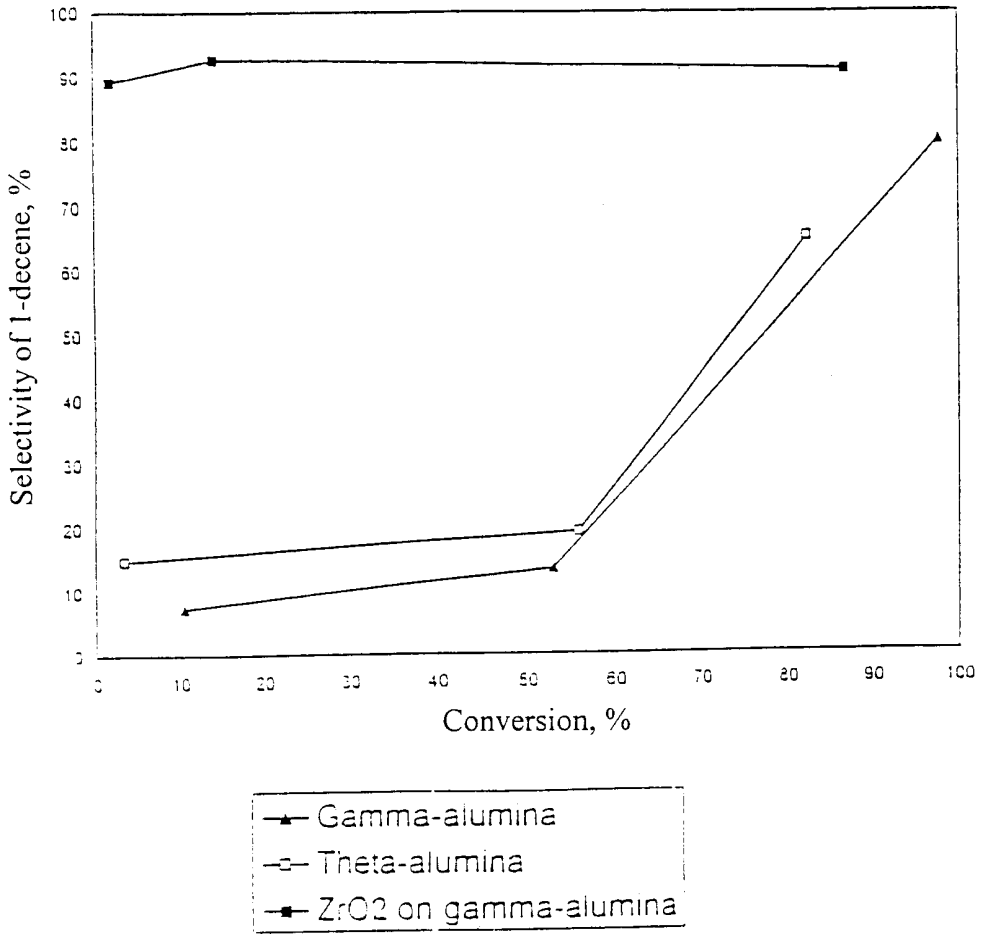

Scheme 2 below shows the selectivity of the dehydration of decanol to give different products as the function of time with ZrO_2 / γ-Al_2O_3 catalyst having a particle size of $0.149 < D < 0.35$, the temperature at the catalyst bed being from 297 to 292 °C, and the WHSV being about 6.

Scheme 2

Selectivity of the dehydration of decanol to give products as the function of time with zirconium oxide / aluminium oxide catalyst

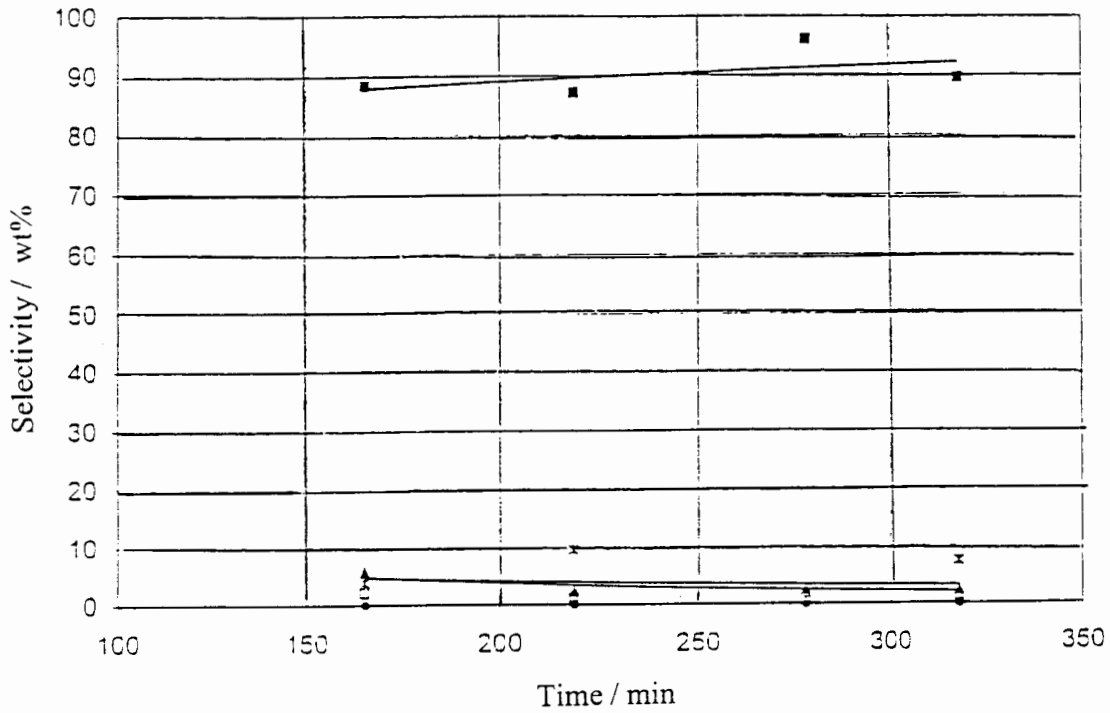

▪	1-decene
▫	trans-2-decene
▲	cis-2-decene
●	other decenes
x	didecyl ether
-	n-decane

Scheme 3 shows the conversion in the dehydration of decanol to give products as the function of time with different catalysts, the WHSV being about 6, and the temperature being about 300 °C.

Scheme 3

Comparison of catalysts in the dehydration of 1-decanol

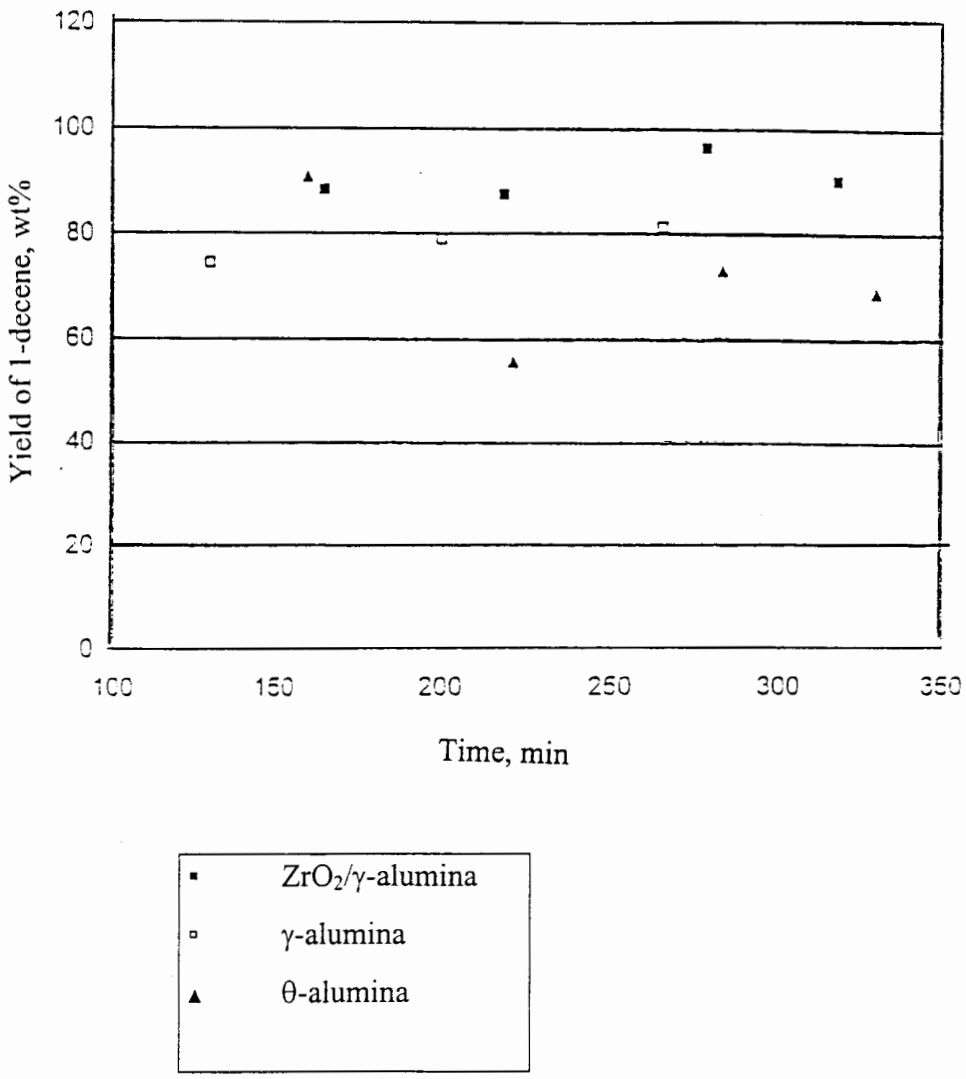

In the dehydration of 2-octanol with the process of the invention, the maximum selectivity relative to 1-octene is about 49 %, for the zirconium oxide/γ-aluminium oxide catalyst, whereas for the γ-aluminium oxide catalyst alone, the maximum selectivity is 45 %. For the commercial zirconium oxide catalyst, the maximum selectivity is only 39 %.

In the dehydration of alcohol, the catalysts containing zirconium oxide according to the present invention are significantly more active than the prior art catalysts containing zirconium presented in the literature. The activity of a catalyst may be illustrated by the so-called TON value (turn over frequency). This TON value shows the number of the units of the compound reacting relative to the amount of the catalyst in a unit of time. At temperatures below 150 °C, the catalysts of the invention all have TON values comparable to those of the prior art catalysts containing zirconium. This may be seen from the following Table 1. At reaction temperatures of 300 °C, the TON values for the catalysts of the invention are more that 10 times higher compared to the activities of the catalysts of the prior art.

Table 1

Comparison of the catalyst activities

Reference	Temp., °C	TON: grams of alcohol / grams of catalyst*h	Alcohol
EP 0 150 832 Ex. 2	360	0.1*	2-hexanol
EP 0 150 832 Ex. 3	370	0.1*	2-octanol
JP 132 225 Ex. 1-1 (Table 2)	350	0.7	1-cyclohexyl ethanol
JP 132 225 Ex. 1-1 (Table 3)	350	0.6	2-methyl-2-butanol
Ex. 3 of the application	230 230 250 250 300 300 300	0.1 0.2 0.8 1.6 5.1 9.6 9.2	1-decanol
Ex. 4	245 241 246 205	3.0 4.9 2.0 0.3	2-octanol
Ex. 5	208 207	0.3 0.5	2-octanol
Ex. 6	210 244	0.5 3.8	2-octanol
Ex. 8	210 209 243 243	0.5 0.7 4.6 2.7	2-octanol
Ex. 9	211 241	0.7 5.1	2-octanol
Ex. 10	213 255	0.1 2.4	

* Calculation is based on the density of ZrO_2 of 5.68 g/cm^3.

Figure 2 shows a preferable embodiment of the invention for oxidizing aliphatic hydrocarbons, exemplifying the oxidation of n-decane to 2-decanol in a distillation column having a side reactor.

n-decane having the boiling point of 174 °C is fed as the stream 1 into the separation zone A of the reaction stream, in this case a distillation device. Being a lighter component, n-decane rises in the column upward from the feed plate, and is removed therefrom as the side stream 3. A suitable oxidating agent 4, preferably air, mixture of oxygen and nitrogen, hydrogen peroxyde or another reactive compound containing oxygen is added into the the side stream 3. The mixture thus obtained is passed as the stream 3 into the oxidation reactor B. Alternatively, the oxidating agent may be added directly into the oxidation reactor B. 2-decanol obtained as the reaction product, unreacted n-decane and the excess of the oxidizing agent are passed as the stream 5 from the reactor B to the separator C, preferably an evaporator, in which the oxidizing agent 4 is separated from the reaction product. The rest of the stream 7 is circulated back to the column A below the feed plate, wherein the product (2-decanol) being a heavier component with a boiling point of 211 °C is carried downward and may be recovered at the bottom 8 of the column. Correspondingly, the unreacted decane is separated in the column A from the reaction product and is carried as a lighter component back to the side outlet 3. Any other products of the oxidation such as decanal, decanones and decanoic acids are recovered at the bottom 8 of the column.

The side stream 3 taken from the column A to the reactor B may either be in gas or liquid phase, and accordingly, the reactor may be designed as a gas phase or a liquid phase reactor. In this way, access of any heavier reaction components into the reactor may be minimized, thus improving the selectivity of the reactor feed.

Figure 3 shows another preferable embodiment of the invention, exemplifying the dehydration of 2-decanol in a distillation column having a side reactor.

Being a heavier component, the 2-decanol feed 8 having the boiling point of 211 °C passed into the column D migrates downward from the feeding point and is removed from the column D as the side stream 10. This side stream 10 is passed into the dehydration reactor E. 1-decene obtained as the reaction product, unreacted 2-decanol and water are passed as the stream 11 from the reactor E through a cooling device into the separator F, in which water may be separated as the stream 12 from the reaction product. The rest of the stream may be circulated back into the column above the feed plate, wherein, as being a lighter component, the product (1-decene) having the boiling point of 171 °C, is carried upward in the column D and may be recovered as distillate 9. Respectively, unreacted 2-decanol is separated in the column from the reaction product and since it is a heavier component, it migrates back towards the side outlet 10. Decanal and decanones may be recovered in the separation zone D as the stream 14, and further, the heavier oxidation products such as decanoic acids may be recovered at the lower part of the separation zone as the stream 15.

In the above example, the oxidation of n-decane to produce an alcohol and dehydration thereof to give decene was discussed. The invention may, however, be applied to all hydrocarbons shown in Table 2 and also, to other hydrocarbons behaving in a similar manner.

Table 2 is shown on the following pages 16 – 19.

Table 2. BOILING POINTS OF SOME PARAFFINS, OLEFINS AND CORRESPONDING OXIDATION PRODUCTS

No. of carbons	g/mol	1-olefin	n-paraffin	Ketone	Aldehyde	1-alcohol	2-alcohol	acid	Boiling point	Stream in Fig. 1
6	84.16	1-hexene							63.4	9, 11, 13
6	86.18	n-hexane	n-hexane						68.7	1, 3, 5, 7
6	100.16	2-hexanone		2-hexanone					127.6	5, 7, 8, 14
6	100.16	Hexanal			Hexanal				131	5, 7, 8, 14
6	102.2	1-hexanol				1-hexanol			157.6	5, 7, 8, 10, 11, 13
6	102.2	2-hexanol (+-)-					2-hexanol		140	5, 7, 8, 10, 11, 13
6	116.2	Hecanoic acid						Hexanoic acid	205.2	5, 7, 8, 15
7	98.18	1-heptene							93.6	9, 11, 13
7	100.2	n-heptane	n-heptane						98.5	1, 3, 5, 7
7	114.19	2-heptanone		2-heptanone					151	5, 7, 8, 14
7	114.19	Heptanal			Heptanal				152.8	5, 7, 8, 14
7	116.2	1-heptanol				1-heptanol			176.4	5, 7, 8, 10, 11, 13
7	116.2	2-heptanol (+-)-					2-heptanol		159	5, 7, 8, 10, 11, 13
7	130.2	Heptanoic acid						Heptanoic acid	222.2	5, 7, 8, 15
8	112.22	1-octene							121.2	9, 11, 13
8	114.23	n-octane	n-octane						125.6	1, 3, 5, 7
8	128.21	2-octanone		2-octanone					172.5	5, 7, 8, 14
8	128.21	Octanal			Octanal				171	5, 7, 8, 14
8	130.23	1-octanol				1-octanol			195.1	5, 7, 8, 10, 11, 13
8	130.23	2-octanol (+-)-					2-octanol		180	5, 7, 8, 10, 11, 13
8	144.21	Octanoic acid						Octanoic acid	239	5, 7, 8, 15
9	126.24	1-nonene							146.9	9, 11, 13
9	128.26	n-nonane	n-nonane						150.8	1, 3, 5, 7
9	142.24	2-nonanone		2-nonanone					195.3	5, 7, 8, 14
9	142.24	Nonanal			nonanal				191	5, 7, 8, 14
9	144.26	1-nonanol				1-nonanol			213.3	5, 7, 8, 10, 11, 13
9	144.26	2-nonanol					2-nonanol		193.5	5, 7, 8, 10, 11, 13
9	158.24	Nonanoic acid						Nonanoic acid	254.5	5, 7, 8, 15

10	140.27	**1-decene**							170.5	9, 11, 13
10	142.28	n-decane	**n-decane**						174.1	1, 3, 5, 7
10	156.27	2-decanone		**2-decanone**					210	5, 7, 8, 14
10	156.27	Decanal			**Decanal**				208.5	5, 7, 8, 14
10	158.28	1-decanol				**1-decanol**			231.1	5, 7, 8, 10, 11, 13
10	158.28	2-decanol (+-)-					**2-decanol**		211	5, 7, 8, 10, 11, 13
10	172.27	Decanoic acid						**Decanoic acid**	268.7	5, 7, 8, 15
11	154.3	**1-undecene**							192.7	9, 11, 13
11	156.31	n-undecane	**n-undecane**						195.9	1, 3, 5, 7
11	170.3	2-undecanone		**2-undecanone**					231.5	5, 7, 8, 14
11	170.3	Undecanal			**Undecanal**					5, 7, 8, 14
11	172.31	1-undecanol				**1-undecanol**			243	5, 7, 8, 10, 11, 13
11	172.31	2-undecanol (+-)-					**2-undecanol**		228	5, 7, 8, 10, 11, 13
11	186.29	Undecanoic acid						**Undecanoic acic**	280	5, 7, 8, 15
12	168.32	**1-dodecene**							213.8	9, 11, 13
12	170.34	n-dodecane	**n-dodecane**						216.3	1, 3, 5, 7
12	184.32	2-dodecanone		**2-dodecanone**					246.5	5, 7, 8, 14
12	184.32	Dodecanal			**dodecanal**					5, 7, 8, 14
12	186.34	1-dodecanol				**1-dodecanol**			259	5, 7, 8, 10, 11, 13
12	186.34	2-dodecanol					**2-dodecanol**		252	5, 7, 8, 10, 11, 13
12	200.32	Dodecanoic acid						**Dodecanoic acid**		5, 7, 8, 15
13	182.35	**1-tridecene**							232.8	9, 11, 13
13	184.37	n-tridecane	**n-tridecane**						235.4	1, 3, 5, 7
13	198.35	2-tridecanone		**2-tridecanone**					263	5, 7, 8, 14
13	198.35	Tridecanal			**Tridecanal**					5, 7, 8, 14
13	200.36	1-tridecanol				**1-tridecanol**				5, 7, 8, 10, 11, 13
13	200.36	2-tridecanol					**2-tridecanol**			5, 7, 8, 10, 11, 13
13	214.35	Tridecanoic acid						**Tridecanoic acid**		5, 7, 8, 15

14	196.38	**1-tetradecene**						238	9, 11, 13
14	198.39	n-tetradecane	**n-tetradecane**					253.5	1, 3, 5, 7
14	212.38	2-tetradecanone		**2-tetradecanone**					5, 7, 8, 14
14	212.38	Tetradecanal			**tetradecanal**				5, 7, 8, 14
14	214.39	1-tetradecanol				**1-tetradecanol**		289	5, 7, 8, 10, 11, 13
14	214.39	2-tetradecanol					**2-tetradecanol**	284	5, 7, 8, 10, 11, 13
14	228.38	Tetradecanoic acid					**Tetradecanoic acid**		5, 7, 8, 15
15	210.4	**1-pentadecene**						268.2	9, 11, 13
15	212.42	n-pentadecane	**n-pentadecane**					270.6	1, 3, 5, 7
15	226.4	2-pentadecanone		**2-pentadecanone**				294	5, 7, 8, 14
15	226.4	Pentadecanal			**Pentadecanal**				5, 7, 8, 14
15	228.41	1-pentadecanol				**1-pentadecanol**			5, 7, 8, 10, 11, 13
15	228.41	2-pentadecanol					**2-pentadecanol**	299	5, 7, 8, 10, 11, 13
15	242.4	Pentadecanoic acid					**Pentadecanoic acid**		5, 7, 8, 15
16	224.43	**1-hexadecene**						284.9	9, 11, 13
16	226.45	n-hexadecane	**n-hexadecane**					286.8	1, 3, 5, 7
16	240.43	2-hexadecanone		**2-hexadecanone**					5, 7, 8, 14
16	240.43	Hexadecanal			**Hexadecanal**				5, 7, 8, 14
16	242.45	1-hexadecanol				**1-hexadecanol**		334	5, 7, 8, 10, 11, 13
16	242.45	2-hexadecanol					**2-hexadecanol**	314	5, 7, 8, 10, 11, 13
16	256.43	Hexadecanoic acid					**Hexadecanoic acid**	351.5	5, 7, 8, 15
4	56.108	**2-metyl-1-propene**						-6.9	9, 11, 13
4	58.124	2-metylpropane	**2-metylpropane**					-11.7	1, 3, 5, 7
4									5, 7, 8, 14
4	72.108	2-methylpropanal			**2-methylpropanal**			64.5	5, 7, 8, 14
4	74.124	2-methyl-1-propanol				**2-methyl-1-propanol**		82.4	5, 7, 8, 10, 11, 13
4	74.124	2-methyl-2-propanol					**2-methyl-2-propanol**	107.8	5, 7, 8, 10, 11, 13
4	88.108	2-methylpropanoic acid					**2-methyl-propanoic acid**	154.4	5, 7, 8, 15

6	84.162	**2-methyl-1-pentene**		62.1	9, 11, 13
6	86.178	2-methylpentane	**2-methylpentane**	60.2	1, 3, 5, 7
6	100.16	2-methyl-3-pentanone	**2-methyl-3-pentanone**	118	5, 7, 8, 14
6	100.16	2-methylpentanal	**2-methylpentanal**	117	5, 7, 8, 14
6	102.18	2-methyl-2-pentanol	**2-methyl-2-pentanol**	121.1	5, 7, 8, 10, 11, 13
6	102.18	2-methyl-1-pentanol	**2-methyl-1-pentanoli**	149	5, 7, 8, 10, 11, 13
6	116.16	2-methylipentanoic acid	**2-methyl-pentanoic acid**	195.6	5, 7, 8, 15
6	84.162	**3-methyl-1-penteeni**		54.2	9, 11, 13
6	86.178	3-methylpentane	**3-methylpentane**	63.2	1, 3, 5, 7
6	100.16	3-methyl-3-pentanone	**3-methyl-3-pentanone**	118	5, 7, 8, 14
6	100.16	3-methylpentanal	**3-methylpentanal**	121	5, 7, 8, 14
6	102.18	3-methyl-2-pentanol	**3-methyl-2-pentanol**	134.3	5, 7, 8, 10, 11, 13
6	102.18	3-methyl-1-pentanol	**3-methyl-1-pentanol**	153	5, 7, 8, 10, 11, 13
6	116.16	3-methylpentanoic acid	**3-methyl-pentanoic acid**	197.5	5, 7, 8, 15
7	98.189	**3-methyl-1-hexene**		83.9	9, 11, 13
7	100.21	3-methylhexane	**3-methylhexane**	92	1, 3, 5, 7
7	114.19	3-methyl-3-hexanone	**3-methyl-3-hexanone**	135	5, 7, 8, 14
7	114.19	3-methylhexanal	**3-methylhexanal**	143	5, 7, 8, 14
7	118.22	3-methyl-2-hexanol	**3-methyl-2-hexanol**	79-81*	5, 7, 8, 10, 11, 13
7	118.22	3-methyl-1-hexanol	**3-methyl-1-hexanol**	169	5, 7, 8, 10, 11, 13
7	130.19	3-methylhexanoic acid	**3-methyl-hexanoic acid**	213	5, 7, 8, 15

*Pressure 52 mmHg

Advantages of the process of the invention include the following. In the first oxidation step wherein an aliphatic hydrocarbon is oxidized to give the corresponding 1- or 2-alcohol, aldehyde, ketone, acid or another product heavier than the starting material, the reactor feed is more selective since the composition at the side outlet of the distillation column may be adjusted very precisely. The yield and the selectivity of the process are considerably improved since the unreacted starting material, that is, aliphatic hydrocarbon present in the reaction product may be recirculated through the separation zone and the side outlet of the column back to the reactor. Thus, the conversion of the reaction may be maintained low to reduce or eliminate the undesired secondary and/or side reactions. Location of the gas separation zone immediately downstream of the reaction zone may be preferable. No separate separation step (two distillation columns) is needed for the concentrating of the feed and the reaction product, but the concentrating of the product and the fractionation of the feed, if necessary, may be carried out in the same column, thus clearly lowering the investement costs.

In the second or dehydration step of the process wherein the oxidation product is dehydrated to produce an olefin, the side stream taken from the column may be in the gas phase. In this way, access of any heavier components from the oxidation of the aliphatic hydrocarbon into the reactor may be minimized, thus improving the selectivity of the reactor feed. Total yields increase considerably since the unreacted starting material present in the reaction product may be recirculated back to the side outlet of the column and thus to the reactor feed by adjusting the boiling. To enhance the dehydration, a dewatering device may be added to the process, or water may be removed at the separation zone D. No separate separation step (two distillation columns) is needed for the concentrating of the feed and the reaction product, but the concentrating of the product and the fractionation of the feed may be carried out in the same column, thus clearly lowering the investement costs. Net selectivity and

conversion of the total process may be improved by uniting the oxidation and dehydration steps in the production of olefins according to the invention.

In the process of the invention, the reactor may in addition be designed to operate at low conversions by returning starting material back to the reactor through the distillation device. This is a favourable alternative in cases where the products tend to react further or the starting materials of the reaction give by-products. In this way, the selectivity of the reaction is improved and the yield is high due to recirculation. In conventional processes, either the yield or the selectivity is low.

In the following, the process of the invention is illustrated with comparative examples and some preferable embodiments thereof, without wishing to limit the scope of the invention to these embodiments.

EXAMPLE 1:

(comparative)

Dehydration of 1-decanol with commercial γ-alumina

1-decanol was dehydrated with commercial γ-alumina. The BET surface area of the alumina measured before the dehydration test was 210 m^2/g. The catalyst was tested by dehydrating 1-decanol in a flow reactor, at the temperature varying from 230 to 300 °C, WHSV being from 1.2 to 11.8. The results are shown in Table 3 below. Maximum selectivity relative to 1-decene was 80 %.

Table 3

Results from the dehydration test of 1-decanol with commercial γ-alumina

Conditions		Results					
Temp., °C	WHSV, grams of 1-decanol / grams of catalyst	Conversion, %	Selectivity, %				
			1-decene	trans-2-decene	cis-2-decene	Other decenes	didecyl ether
230	1.2	54.2	17.2	0.1	0.2	0	82.5
230	6.0	10.5	7.4	0	0	0	92.6
230	11.3	4.4	20.3	0	0	0	79.7
250	1.2	87.1	59	0.9	2.9	0.2	37
250	5.6	52.9	13.5	0	0.1	0	86.5
250	11.6	27.6	18.6	0.1	0.4	0	81
300	1.2	99.8	7.5	28.9	12.6	50.6	0.2
300	5.7	97.6	80	5.6	12.9	0.5	1.0
300	11.8	90.8	75.7	5.5	10.9	1.1	6.6

EXAMPLE 2

(comparative)

Dehydration of 1-decanol with commercial θ-alumina

1-decanol was dehydrated with commercial θ-alumina. The catalyst was prepared by heating commercial γ-alumina at 950 °C for six hours. The BET surface area of the alumina measured before the dehydration test was 131 m^2/g. The catalyst was tested by dehydrating 1-decanol in a flow reactor, at the temperature varying from 230 to 300 °C, WHSV being from 1.1 to 6.2. The results are shown in Table 4 below. Maximum selectivity relative to 1-decene was 89 %.

Table 4

Results from the dehydration test of 1-decanol with commercial θ-alumina

Conditions		Results					
Temp., °C	WHSV, grams of 1-decanol / grams of catalyst	Conversion, %	Selectivity, %				
			1-decene	trans-2-decene	cis-2-decene	Other decenes	didecyl ether
230	1.2	32.3	8.9	0	0	0	91.1
230	2.4	14.3	8.5	0	0	0	91.5
230	3.8	8.1	41.4	0	0	0	58.6
230	6.1	3.3	15.0	2.9	2.4	0	79.7
250	1.2	78.2	20.0	0	0	0	80.0
250	2.5	62.8	14.9	0	0.1	0	85.0
250	3.9	37.5	22.7	0	0.2	0	77.1
250	6.1	55.8	15.0	2.9	2.4	0	79.7
300	1.1	99.8	31.3	27.9	31.6	9.3	0
300	2.4	100	71.3	9.6	18.2	1.0	0
300	3.8	93.9	89.5	2	5.3	0	3.1
300	6.2	82.3	65.1	0.3	1.1	0.2	53.6

EXAMPLE 3

Dehydration of 1-decanol with zirconia / γ-alumina catalyst wherein zirconia was prepared from zirconium tetrachloride and water on alumina with atomic layer epitaxial method.

1-decanol was dehydrated with zirconia / γ-alumina catalyst wherein zirconia was prepared from zirconium tetrachloride and water on alumina with atomic layer epitaxial method (ALE). The BET surface area of the catalyst measured before the dehydration test was 163 m^2/g. The catalyst was tested in dehydration of 1-decanol in a flow reactor, at the temperature varying from 230 to 300 °C, WHSV being from 5.8 to 12.4. The results are shown in Table 5 below. Maximum selectivity relative to 1-

decene was 93 %. As may seen from these results, zirconia prepared with atomic layer epitaxial method improves the 1-olefin selectivity of the alumina based catalyst in the dehydration of alcohols.

TABLE 5

Results from the dehydration test of 1-decanol with zirconia / γ-alumina catalyst wherein zirconia was prepared from zirconium tetrachloride and water on alumina with atomic layer epitaxial method.

Conditions		Results					
Temp., °C	WHSV, grams of 1-decanol / grams of catalyst	Conversion, %	Selectivity, %				
			1-decene	trans-2-decene	cis-2-decene	other decenes	didecyl ether
230	5.9	1.8	89.3	0	0	0	10.7
230	12.2	1.5	45.5	0	0	0	54.5
250	5.8	14.2	92.8	0	0.2	0	7.0
250	12.4	12.5	52.0	0	0	0	48.0
300	5.9	86.8	91.0	0.7	0.5	0	5.9
300	12.3	77.8	90.4	0.4	1.8	0.3	7
300	12.4	73.9	86.1	0.4	1.7	0.3	11.3

Example 4

Dehydration of 2-octanol with zirconia / γ-alumina catalyst

2-octanol was dehydrated with zirconia / γ-alumina catalyst wherein zirconia was prepared from zirconium tetrachloride and water on alumina with atomic layer epitaxial method. The zirconium content of the catalyst was 10.5 %, by weight. The chloride content of the catalyst was below 0.1 %, by weight. The BET surface area of the catalyst measured before the dehydration test was 163 m^2/g. The catalyst was tested in dehydration of 2-octanol in a flow reactor, at the temperature varying from 205 to 246 °C, WHSV being from 3.0 to 12.1. The results are shown in Table 6 below. Maximum selectivity relative to 1-octene was 45 %.

EXAMPLE 5

Dehydration of 2-octanol with zirconia / γ-alumina catalyst

2-octanol was dehydrated with zirconia / γ-alumina catalyst wherein zirconia was prepared from zirconium tetrachloride and water on alumina with atomic layer epitaxial method. The zirconium content of the catalyst was 9.5 %, by weight. The chloride content of the catalyst was from 0.1 to 0.2 %, by weight. The catalyst was tested by dehydrating 2-octanol in a flow reactor, at the temperature varying from 207 to 208 °C, WHSV being from 2 to 6. The results are shown in Table 6 below. Maximum selectivity relative to 1-octene was 49 %.

EXAMPLE 6

Dehydration of 2-octanol with zirconia / γ-alumina catalyst

2-octanol was dehydrated with zirconia / γ-alumina catalyst wherein zirconia was prepared from zirconium tetrachloride and water on alumina with atomic layer epitaxial method. The zirconium content of the catalyst was 13.7 %, by weight. The chloride content of the catalyst was below 0.2 %, by weight. The catalyst was tested by dehydrating 2-octanol in a flow reactor, at the temperature varying from 210 to 244 °C, WHSV being from 2 to 6. The results are shown in Table 6 below. Maximum selectivity relative to 1-octene was 45 %.

EXAMPLE 7

(comparative)

Dehydration of 2-octanol with γ-alumina

For comparison purposes, 2-octanol was dehydrated with γ-alumina. The catalyst was tested in dehydration of 2-octanol in a flow reactor, at the temperature varying from

206 to 254 °C, WHSV being from 2 to 6. The results are shown in Table 6 below. Maximum selectivity relative to 1-octene was 46 %.

EXAMPLE 8

Dehydration of 2-octanol with γ-alumina impregnated with $ZrO(NO_3)_2$

2-octanol was dehydrated with γ-alumina impregnated with $ZrO(NO_3)_2$. Thereafter, the catalyst was calcined at 500 °C. The zirconium content of the catalyst was 12 %, by weight. The catalyst was tested in dehydration of 2-octanol in a flow reactor, at the temperature varying from 209 to 243 °C, WHSV being from 3 to 6. The results are shown in Table 6 below. Maximum selectivity relative to 1-octene was 48 %.

EXAMPLE 9

Dehydration of 2-octanol with γ-alumina impregnated with $ZrO(NO_3)_2$

2-octanol was dehydrated with γ-alumina impregnated with $ZrO(NO_3)_2$. Thereafter, the catalyst was calcined at 600 °C. The zirconium content of the catalyst was 12 %, by weight. The catalyst was tested in dehydration of 2-octanol in a flow reactor, at the temperature varying from 211 to 255 °C, WHSV being from 3 to 6. The results are shown in Table 6 below. Maximum selectivity relative to 1-octene was 49 %.

EXAMPLE 10

Dehydration of 2-octanol with γ-alumina impregnated with $ZrO(NO_3)_2$

2-octanol was dehydrated with γ-alumina impregnated with $ZrO(NO_3)_2$. Thereafter, the catalyst was calcined at 950 °C. The zirconium content of the catalyst was 12 %,

by weight. The catalyst was tested in dehydration of 2-octanol in a flow reactor, at the temperature varying from 213 to 255 °C, WHSV being from 3 to 6. The results are shown in Table 6 below. Maximum selectivity relative to 1-octene was 49 %.

Table 6

Comparison of catalysts in the dehydration of 2-octanol

Ex.	Catalyst	WHSV	T (°C)	Conversion, %	Selectivity, %			
					1-octene	2-octene	Other octenes	Ethers
4	ZrO on γ-alumina ZrO$_2$ ALE* Zr content 10.5 % by weight	5.9	245	50.6	43.1	50.2	0	6.7
		12.1	241	40.3	43.2	49.3	0	7.5
		3.0	246	65.1	41.3	54.1	0	4.6
		3.0	205	9.6	44.8	36.6	0	18.7
5	ZrO$_2$ on γ-alumina ZrO$_2$ ALE* Zr content 9.5 % by weight	2.4	208	14.2	45.8	39.1	0	15.2
		6.1	207	8.8	48.8	37.7	0	13.4
6	ZrO$_2$ on γ-alumina ZrO$_2$ ALE* Zr content 13.7 % by weight	3.3	210	15.8	45.3	40.1	0	14.6
		5.8	244	64.6	43.0	50.8	0.04	6.2
7	γ-alumina	1.7	254	99.9	40.2	59.4	0.3	0
		2.8	249	99.8	41.8	58.0	0.2	0
		5.7	242	91.6	42.9	56.0	0	1.1
		5.7	207	16.9	45.5	35.2	0	19.3
		1.8	208	37.0	41.2	37.9	0.03	20.9
		2.7	207	27.9	42.8	36.7	0	20.5
		5.6	206	18.8	46.1	36.3	0	17.6
8	ZrO$_2$ on γ-alumina Impregnation + Calcination at 500 °C	2.7	210	18.1	45.1	35.4	0	19.5
		6.0	209	12.2	47.8	34.8	0	17.4
		6.0	243	76.8	43.7	51.9	0.1	4.2
		2.8	243	95.3	43.2	56.2	0.1	0.5
9	ZrO$_2$ on γ-alumina Impregnation + Calcination at 600 °C	3.0	211	23.1	46.3	36.2	0.06	17.5
		6.2	241	81.8	44.1	53.0	0.07	2.8
10	ZrO$_2$ on θ-alumina Impregnation + calcination at 950 °C	3.0	213	4.6	49.2	38.7	0.2	11.8
		5.8	255	42.0	44.9	46.5	0.5	8.1

* ALE = atomic layer epitaxial technique

Claims

1. Process for producing olefins, **characterized** in that the process comprises the following steps:

a) oxidation of an aliphatic hydrocarbon component to give the corresponding alcohol wherein said aliphatic hydrocarbon is fed as a stream (1) into a separation zone (A) of an oxidation section (I) and removed therefrom as a side stream (3), an oxidating agent (4) being added to said side stream (3) and the mixture obtained being passed into the reaction zone (B), or the oxidating agent being directly added into the reactor, and thereafter, the reactor product is circulated from the reactor within a stream (7) back to the zone (A), in which it is recovered as the bottom product (8),

b) dehydration of the alcohol to produce the corresponding olefin, wherein said alcohol is passed as a stream (8) into the separation zone (D) of the dehydration section (II) and passed therefrom as a side stream (10) into a reaction zone (E), preferably a side reactor, and thereafter, the reactor product is circulated from the reactor as a stream (13) back to the separation zone (D), in which the olefin is recovered as distillate (9).

2. Process according to claim 1, **characterized** in that a gas separating means is provided downstream of the reactor to remove gas from the reaction product.

3. Process according to claim 1 or 2, **characterized** in that except for the alcohol, the other oxidation products are separated in the separation zone (D) as streams (14) and (15).

4. Process according to any of claims 1 – 3, **characterized** in that water is removed in a water separating means.

5. Process according to any of claims 1 – 4, **characterized** in that said oxidating agent employed in step a) comprises air, mixture of oxygen and nitrogen, hydrogen peroxyde or another oxidizing agent.

6. Process according to any of claims 1 – 5, **characterized** in that in step a), said separation zone (A) for the reaction fraction and in step b), the separation zone (D) for the product and the reaction fraction comprise respectively a distillation column, and in steps a) and b), the reaction zones (B) and (E) comprise a fixed bed reactor, mixing tank reactor, fermentor or a trickle layer reactor.

7. Process according to any of claims 1 – 6, **characterized** in that said aliphatic hydrocarbon component is a linear or branched C_4-C_{40} hydrocarbon.

8. Process according to any of claims 1 – 7, **characterized** in that said aliphatic hydrocarbon component is a C_6-C_{12} hydrocarbon.

9. Process according to any of claims 1 – 8, **characterized** in that α- or β-olefins are obtained as the product.

10. Process according to any of claims 1 – 9, **characterized** in that said hydrocarbon is n-decane that is oxidized in step a) to give 1- or 2-decanol, and then in step b), said 1- or 2-decanol is dehydrated to produce 1-decene.

11. Process according to any of claims 1 – 10, **characterized** in that in step b), a primary or a secondary alcohol is dehydrated by means of a zirconia/support catalyst.

12. Process according to claim 11, **characterized** in that said support is alumina, preferably γ-alumina or θ-alumina, more preferably θ-alumina.

13. Process according to claim 11 or 12, **characterized** in that said zirconia/support catalyst is produced with atomic layer epitaxial technique.

14. Process according to claim 11 or 12, **characterized** in that said zirconia/support catalyst is produced by impregnating a zirconium salt, preferably $ZrO(NO_3)_2$, on said support.

15. Process according to any of claims 11 – 14, **characterized** in that the zirconium content of said catalyst is from 0.1 – 50 %, preferably from 5 to 20 %, by weight.

16. Process according to any of claims 11 – 15, **characterized** in that said dehydration of said alcohol is carried out in the gas phase.

17. Process according to any of claims 11 – 16, **characterized** in that said side stream taken from the separation zone for the reaction fraction may either be in gas or liquid phase, and said reactor may be a gas phase or a liquid phase reactor.

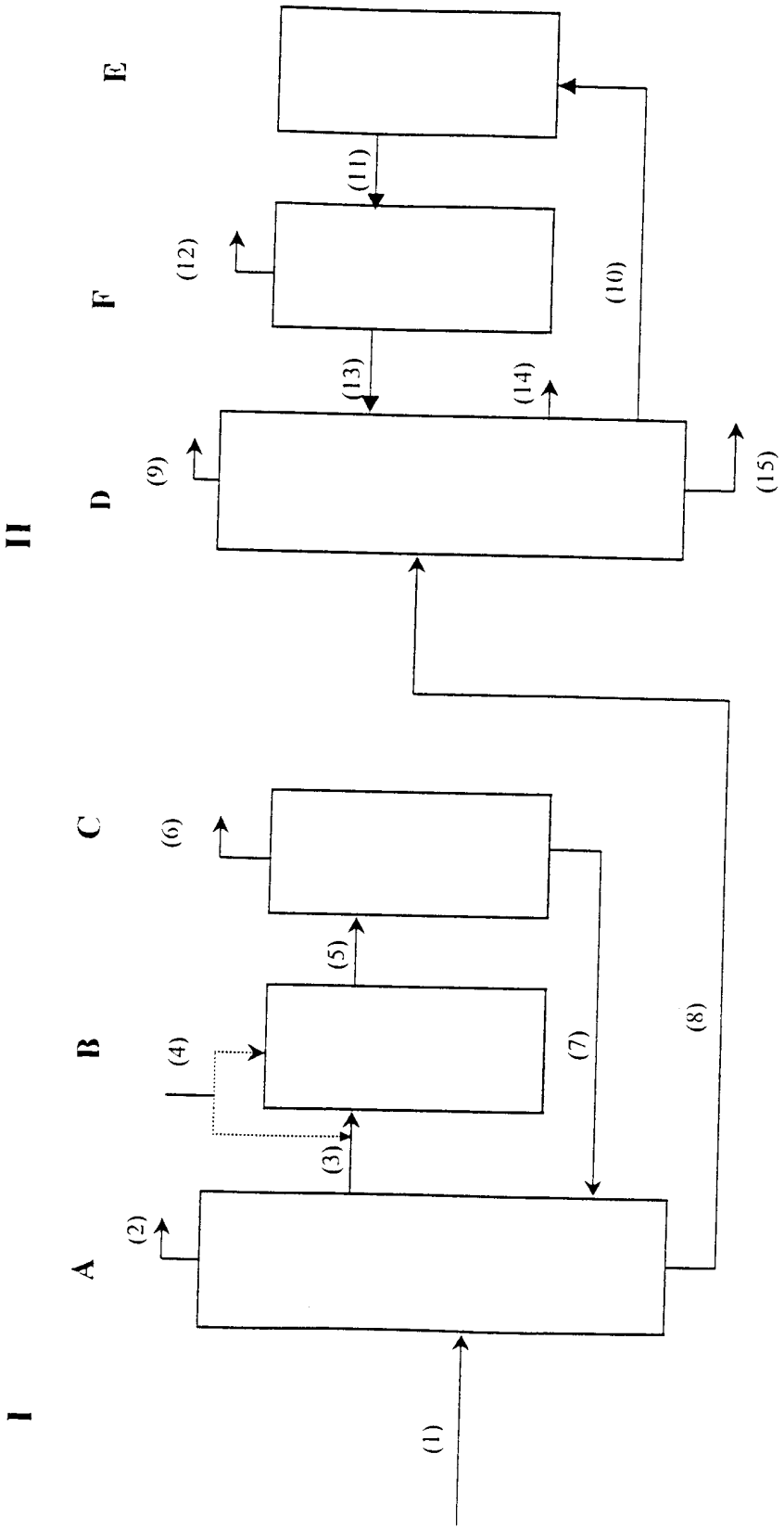

Fig. 1

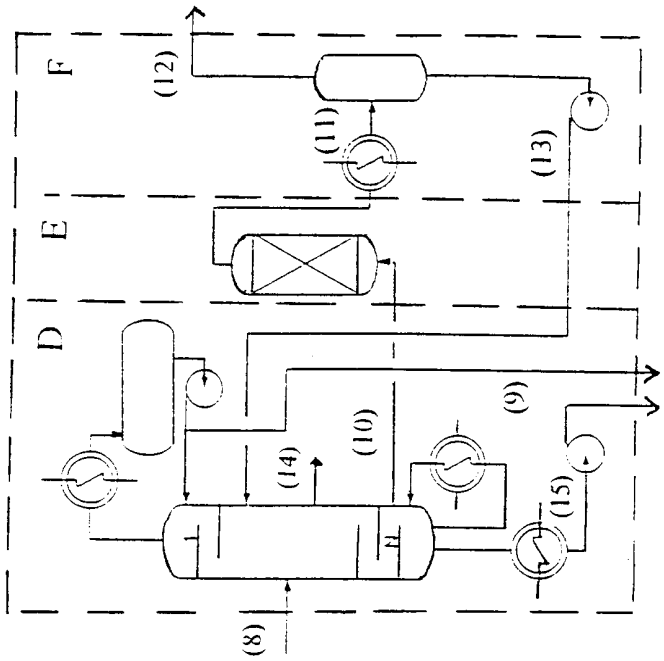

Fig. 3

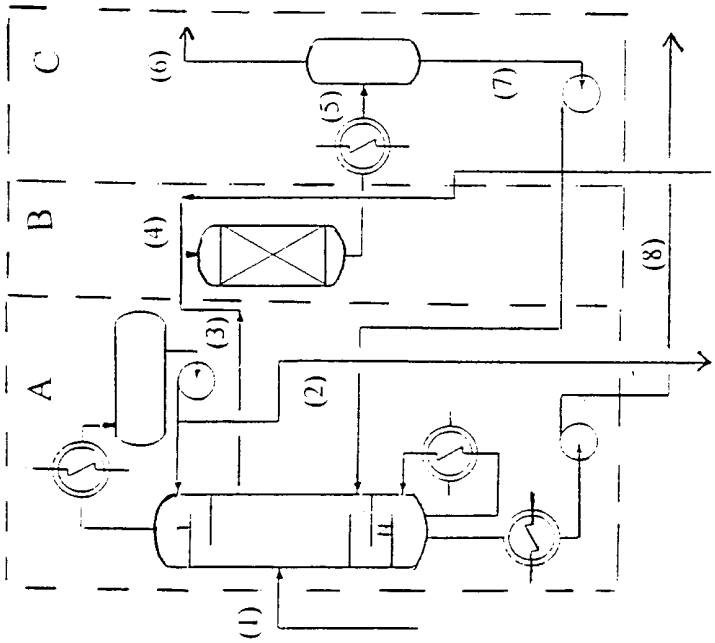

Fig. 2

INTERNATIONAL SEARCH REPORT

International application No.
PCT/FI 00/01089

A. CLASSIFICATION OF SUBJECT MATTER

IPC7: C07C 1/24, C07C 11/02
According to International Patent Classification (IPC) or to both national classification and IPC

B. FIELDS SEARCHED

Minimum documentation searched (classification system followed by classification symbols)

IPC7: C07C

Documentation searched other than minimum documentation to the extent that such documents are included in the fields searched

SE,DK,FI,NO classes as above

Electronic data base consulted during the international search (name of data base and, where practicable, search terms used)

C. DOCUMENTS CONSIDERED TO BE RELEVANT

Category*	Citation of document, with indication, where appropriate, of the relevant passages	Relevant to claim No.
Y	US 3558687 A (J.L. RUSSELL), 26 January 1971 (26.01.71)	1-17
	--	
Y	EP 0150832 A2 (SUMITOMO CHEMICAL COMPANY, LIMITED), 7 August 1985 (07.08.85), page 3, line 6 - page 4, line 21, example 17	1-17
	--	

☐ Further documents are listed in the continuation of Box C. ☒ See patent family annex.

* Special categories of cited documents:
"A" document defining the general state of the art which is not considered to be of particular relevance
"E" earlier application or patent but published on or after the international filing date
"L" document which may throw doubts on priority claim(s) or which is cited to establish the publication date of another citation or other special reason (as specified)
"O" document referring to an oral disclosure, use, exhibition or other means
"P" document published prior to the international filing date but later than the priority date claimed
"T" later document published after the international filing date or priority date and not in conflict with the application but cited to understand the principle or theory underlying the invention
"X" document of particular relevance: the claimed invention cannot be considered novel or cannot be considered to involve an inventive step when the document is taken alone
"Y" document of particular relevance: the claimed invention cannot be considered to involve an inventive step when the document is combined with one or more other such documents, such combination being obvious to a person skilled in the art
"&" document member of the same patent family

Date of the actual completion of the international search	Date of mailing of the international search report
14 March 2001	26 -03- 2001
Name and mailing address of the ISA/ Swedish Patent Office Box 5055, S-102 42 STOCKHOLM Facsimile No. +46 8 666 02 86	Authorized officer Dagmar Järvman/ELY Telephone No. +46 8 782 25 00

INTERNATIONAL SEARCH REPORT

Information on patent family members

25/02/01

International application No.
PCT/FI 00/01089

Patent document cited in search report	Publication date	Patent family member(s)	Publication date
US 3558687 A	26/01/71	BE 702094 A	31/01/68
		CH 476654 A	15/08/69
		DE 1668202 A	09/06/71
		ES 343836 A	01/10/68
		FR 1548378 A	06/12/68
		GB 1138420 A	01/01/69
		IL 28446 A	24/12/70
		LU 54217 A	16/06/69
		NL 6710454 A	05/02/68
EP 0150832 A2	07/08/85	CA 1235144 A	12/04/88
		DE 3565977 D	00/00/00
		JP 60158121 A	19/08/85
		JP 1612123 C	30/07/91
		JP 2037895 B	28/08/90
		JP 61053230 A	17/03/86
		JP 61130240 A	18/06/86