UNITED STATES PATENT AND TRADEMARK OFFICE

BEFORE THE PATENT TRIAL AND APPEAL BOARD

Mercedes-Benz USA, LLC,
Petitioner,

v.

Yechezkal Evan Spero,
Patent Owner.

Case [To be assigned]
Patent 9,955,551

PETITION FOR *INTER PARTES* REVIEW OF CLAIMS 8, 10-18, AND 24-47 OF U.S. PATENT NO. 9,955,551 UNDER 35 U.S.C. §§ 311-319 AND 37 C.F.R. §42.100 *et seq.*

Filed on behalf of Petitioner:
Celine Jimenez Crowson (Reg. No. 40,357)
Joseph J. Raffetto (Reg. No. 66,218)
Scott Hughes (Reg. No. 68,385)
Ryan Stephenson (Reg. No. 76,608)
HOGAN LOVELLS US LLP
555 13th Street N.W.
Washington, D.C. 20004
Telephone: 202.637.5600
Facsimile: 202.637.5710

TABLE OF CONTENTS

I. INTRODUCTION 1
II. MANDATORY NOTICES 2
A. Real Parties-in-Interest 2
B. Related Matters 2
C. Counsel and Service Information 3
III. NOTICE OF FEES PAID 4
IV. CERTIFICATION OF GROUNDS FOR STANDING 4
V. PRECISE RELIEF REQUESTED 4
VI. OVERVIEW OF THE '551 5
A. Subject Matter of the '551 5
B. Prosecution History of the '551 6
VII. CLAIM CONSTRUCTION AND POSITA DEFINITION 8
A. Claim Construction 8
B. Definition of a Person of Ordinary Skill in the Art 9
VIII. ANALYSIS OF GROUNDS FOR UNPATENTABILITY 9
A. Ground 1 – Alden Anticipates and Renders Obvious Claims 24-27, 29-35, 37-43, 45-47 11
1. Independent Claim 24 11
2. Dependent Claim 25 37
3. Independent Claim 32 39
4. Dependent Claim 33 44
5. Independent Claim 40 46
6. Dependent Claim 41 51
7. Dependent Claims 26/34/42 53
8. Dependent Claims 27/35/43 57
9. Dependent Claims 29/37/45 58
10. Dependent Claims 30/38/46 and 31/39/47 59
B. Ground 2 – Alden in View of Kobayashi Renders Obvious Claims 28, 36, 44 62
C. Ground 3 – Alden in View of Kondo Renders Obvious Claims 8, 10-14 65
1. Independent Claim 8 65
2. Dependent Claim 10 79
3. Dependent Claim 11 81
4. Dependent Claim 12 82

5. Dependent Claim 13 83
6. Dependent Claim 14 84
D. Ground 4 – Alden (as Modified by Kondo) in View of Stam Renders Obvious Claims 15-18.....85
1. Dependent Claim 15 85
2. Dependent Claim 16 87
3. Dependent Claim 17 87
4. Dependent Claim 18 88
IX. TRIAL SHOULD BE INSTITUTED.....89
A. *Fintiv* Factors.....89
B. 35 U.S.C. § 325(d).....89
X. CONCLUSION 91

TABLE OF AUTHORITIES

Page(s)

Cases

Advanced Bionics v. MED-EL Elektromedizinische Geräte GmbH,
IPR2019-01469 (Feb. 13, 2020) 91

Apple, Inc. v. Fintiv, Inc.,
IPR2020-00019 (Mar 20, 2020) 89

Oticon Med. AB v. Cochlear Ltd.,
IPR2019-00975 (Oct. 16, 2019) 90

Sotera Wireless, Inc. v. Masimo Corp.,
IPR2020-01019 (Dec. 1, 2020)..... 89

Rules

37 C.F.R. § 42.100(b) 9

I. INTRODUCTION

Petitioner Mercedes-Benz USA, LLC challenges Claims 8, 10-18, 24-47 of US9955551 ("**'551**") (EX1001). The '551 claims a headlight system for a vehicle that includes (1) a plurality of light clusters or sources in a headlight (*e.g.*, LEDs), (2) sensors to collect data, and (3) a processor and control circuitry to control the light clusters or sources based on the data. The '551 recites that its sensors can obtain information about the field-of-view in front of the vehicle—for example, detect other vehicles—and that its processor and control circuitry can then use this to reduce illumination in portions of the field-of-view (*e.g.*, those LEDs pointing at the oncoming vehicle) while keeping LEDs in other areas (*e.g.*, in portions with no other vehicles) at full illumination.

But this was not new at the time of the '551. Automated headlight systems, enabling selective illumination of lighting elements in response to sensor data, were well known before this. For example, the primary reference herein, US2003/0137849 ("**Alden**") (EX1005), discloses a near-identical headlight system in which a controller can control individual lighting elements (*e.g.*, LEDs) based on received sensor data:

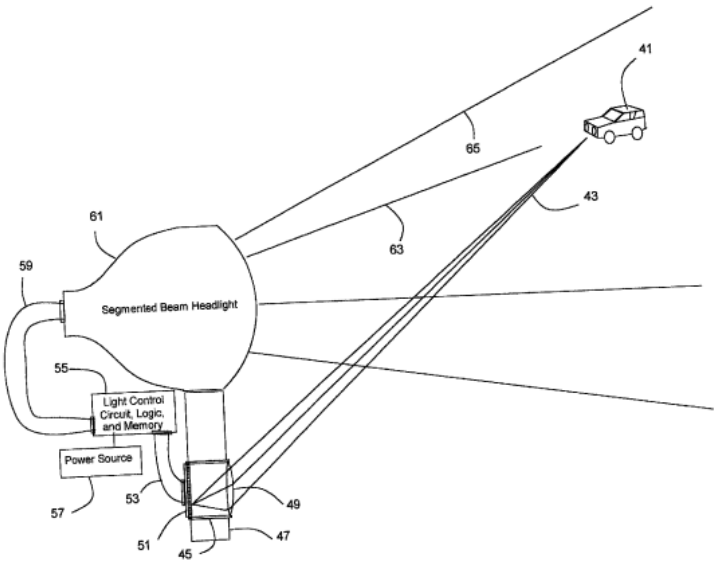

This enables the Alden system to, for example, reduce the light in certain areas where there is a detected vehicle (63) while switching other areas where there is no vehicle (65) to full illumination. Alden was not considered during prosecution of the ’551, and alone and in combination with other prior art, renders Claims 8, 10-18, 24-47 of the ’551 invalid.

II. MANDATORY NOTICES

A. Real Parties-in-Interest

The real parties-in-interest are Petitioner Mercedes-Benz USA, LLC; Mercedes-Benz Group AG; Mercedes-Benz AG; and Mercedes-Benz Intellectual Property GmbH & Co. KG.

B. Related Matters

An entity separate from the Patent Owner reflected in USPTO records, Torchlight Technologies, LLC (“**Torchlight**”), asserted the ’551 in two lawsuits in

the District of Delaware on June 7, 2022:

- Case No. 1:21-CV-751 against Petitioner Mercedes-Benz USA, LLC, Daimler AG,[1] Volkswagen Group of America, Inc., Audi AG, Audi of America, LLC, Porsche AG, and Porsche North America, Inc.
- Case No. 1:22-CV-752 against General Motors LLC, General Motors Co., and General Motors Holdings, LLC.

These cases are in their infancy. Many defendants were only just served; responses to the operative complaint have not been filed; and no discovery has been exchanged. Further, the cases have been indefinitely stayed pending resolution of whether the complaint should be dismissed due to lack of standing and failure to join necessary parties.

The ’551 is also the subject of IPR2023-00336 (challenging Claims 1-4, 7-8, 10-18), IPR202300615 (challenging Claims 24-55), and IPR2023-00318 (challenging Claims 56-87), filed by Volkswagen Group of America, Inc. (“**Volkswagen**”). These IPRs are pending, and are awaiting decisions on institution.

Petitioner is also filing contemporaneously herewith a petition for *inter partes* review of Claims 48-87 of the ’551.

C. Counsel and Service Information

[1] Daimler AG became Mercedes-Benz Group AG on February 1, 2022.

Lead counsel is Celine Crowson (Reg. No. 40,357). Backup counsel are Joe Raffetto (Reg. No. 66,218), Scott Hughes (Reg. No. 68,385), and Ryan Stephenson (Reg. No. 76,608). Service information is as follows:

Post and Hand Delivery	Hogan Lovells US LLP 555 13th Street, N.W. Washington, D.C. 20004
Email	celine.crowson@hoganlovells.com joseph.raffetto@hoganlovells.com ryan.stephenson@hoganlovells.com scott.hughes@hoganlovells.com
Telephone / Facsimile	202.637.5600 / 202.637.5910

III. NOTICE OF FEES PAID

Fees are submitted herewith. If additional fees are due during the proceeding, the undersigned authorizes the Office to charge them to Deposit Account No. 50-1349.

IV. CERTIFICATION OF GROUNDS FOR STANDING

Petitioner certifies that the ’551 is available for *inter partes* review, and that it is not barred or estopped from requesting this review.

V. PRECISE RELIEF REQUESTED

The relief requested is cancellation of the challenged claims, as follows:

Ground	References	Claims[2]	Basis
1	Alden	**24**-27, 29-31**,** **32**-35, 37-39**,** **40**-43, 45-47	102 / 103
2	Alden / Kobayashi	28, 36, 44	103
3	Alden / Kondo	**8**, 10-14	103
4	Alden / Kondo / Stam	15-18	103

VI. OVERVIEW OF THE '551

A. Subject Matter of the '551

The '551 argues that in the "prior art," lighting fixtures were often single, large lights that were "generic" and "universal." ('551, 5:36-46, 11:1-5, 11:45-49.) These lights were allegedly not tailored to individual applications, produced light in more places than needed, and required reflectors and refractors to re-direct light. (*Id.*) The '551 claims it came up with a new approach it called a "Digital Lighting Fixture" that can "provide the 'correct' lighting solution for the situation at hand." (*Id.*, 11:8-13.) The '551 purports to accomplish this through "controllability offered by breaking the total light output up into discrete ('digital') specifically aimable and dimmable elements which can be addressed by control electronics." (*Id.*, 11:56-62.)

While the '551 gives various example applications, its claims are directed to

[2] Independent claims in bold.

the alleged invention as used in an "illuminating device" for a "motor vehicle." (*Id.*, Claims 24, 32, 40; *see also* Abstract.) The claims recite how light clusters or sources (e.g., LEDs) can be included in a headlamp on a vehicle:

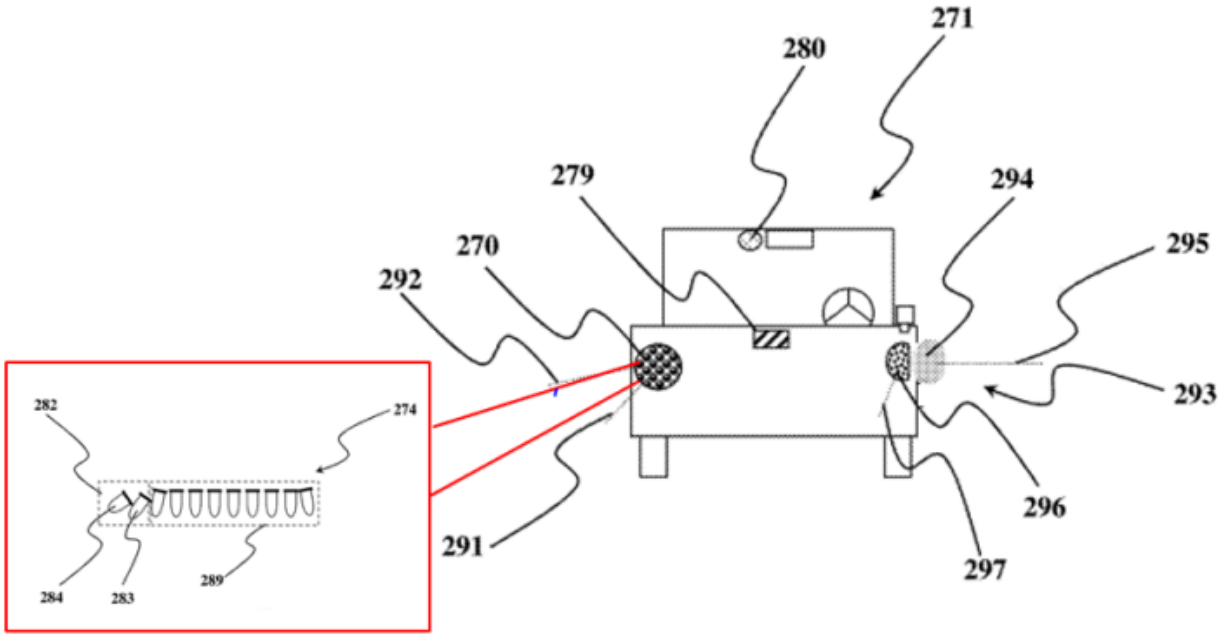

(*Id.*, Fig. 15 (annotated).) "Sensors" obtain relevant situational data, including detecting things like headlights of oncoming vehicles. (*See, e.g.*, *id.*, Claim 24, 50:38-52:54; 53:13-55:42.) A "processor" can then determine, based on this, how to adjust the output from the individual lights (or LEDs), *e.g.*, "to reduce glare" in a particular area in the field-of-view. (*See, e.g.*, *id.*)

B. Prosecution History of the '551

The '551 was filed on January 24, 2012, and issued on April 24, 2018. It is part of the following family:

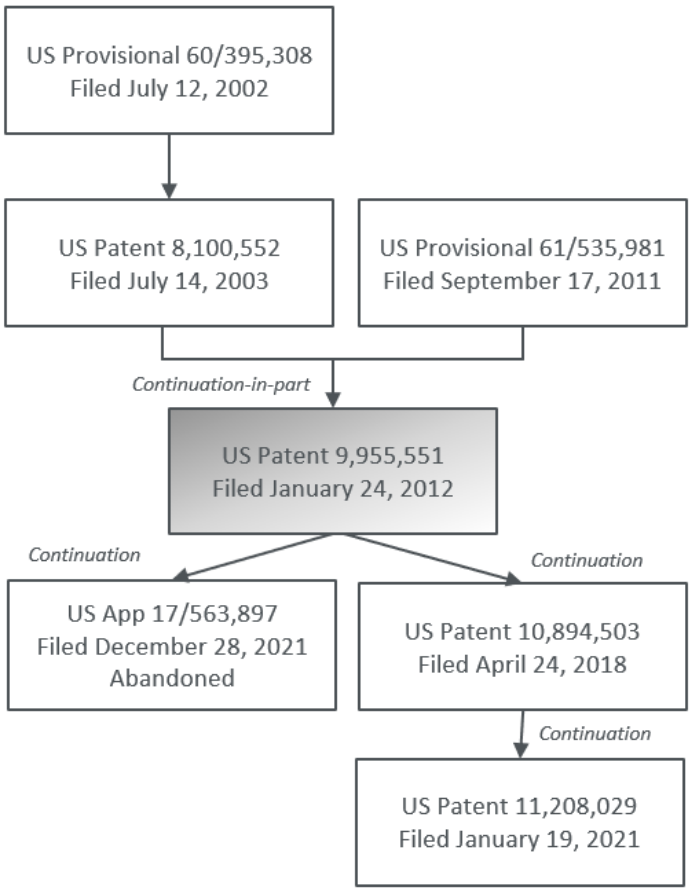

Only challenged Claim 8 was part of the original prosecution of the application underlying the '551. Claim 8 was rejected under § 103 as being unpatentable over US20020047628 ("**Morgan**") in view of US20020047646 ("**Lys**") in further view of US6379022 ("**Amerson**"). (EX1002, '551 Original File History, Final Rejection mailed October 5, 2015.) In response, Patent Owner amended the claim to state that "different sub-areas of the illuminated area need to be illuminated at a different intensity and/or at a different spectrum than another sub-area of the illuminated area." (*Id.*, Amendments to the Claims mailed February 5,

2016.) Following this, the examiner issued a Notice of Allowance. (*Id.*, Notice of Allowance and Fees Due.)

Subsequently, on July 30, 2021, Patent Owner requested *ex parte* reexamination of independent Claim 6 of the '551, and with this request submitted new Claims 24-87. (EX1010, '551 Reexamination File History, Request for Ex Parte Reexamination.) After institution, the Examiner issued a single Office Action, rejecting independent Claim 6 over certain prior art and allowing new Claims 24-87. (*Id.*, Non-final Office Action mailed March 16, 2022.) Patent Owner canceled Claim 6 in response, and an *Ex Parte* Reexamination Certificate issued cancelling such claim and issuing new Claims 24-87. (*Id.*, Reexamination Certificate.)

On April 14, 2023, Patent Owner filed a Disclaimer under 37 C.F.R. § 1.321(a), disclaiming Claims 1-4. (EX1011.) Thus, as of this Petition, the following claims remain in the '551: Claims 5 and 7-87.[3]

VII. CLAIM CONSTRUCTION AND POSITA DEFINITION

A. Claim Construction

[3] Patent Owner has also filed a broadening Reissue application, US16/858,342, to add 21 claims directed to a room illumination system. (EX1012.) That application was suspended pending the reexamination. (*Id.*) Patent Owner has requested that the suspension be lifted, but no action has been taken on this. (*Id.*)

Claims in an *inter partes* review "shall be construed using the same claim construction standard that would be used to construe the claim in a civil action under 35 U.S.C. 282(b), including construing the claim in accordance with the ordinary and customary meaning of such claim as understood by one of ordinary skill in the art and the prosecution history pertaining to the patent." 37 C.F.R. §42.100(b). Unless indicated otherwise, all claim terms herein are given such ordinary and customary meaning.

B. Definition of a Person of Ordinary Skill in the Art

A person of ordinary skill in the art ("**POSITA**") in the field of the '551 would have had an undergraduate degree in mechanical engineering, electrical engineering, automotive engineering, optical engineering, applied physics, computer science, or similar disciplines, along with two years of experience working with intelligent vehicle systems, automotive control systems, or lighting control systems. (Papanikolopoulos Decl., ¶33.)[4] The more education one has, the less experience needed to attain an ordinary level of skill. (*Id.*) Similarly, more experience in the field may serve as a substitute for formal education. (*Id.*)

VIII. ANALYSIS OF GROUNDS FOR UNPATENTABILITY

[4] Dr. Nikolaos Papanikolopoulos is an expert in intelligent transportation systems, among other things. His Declaration is included as EX1003.

Alden is US2003/0137849. Alden was filed January 22, 2002, and published July 24, 2003. Alden is prior art under at least pre-AIA §102(e) because it was filed before the filing date, and any potential priority date, of the ’551.

In Alden, individual lighting elements (119) such as LEDs are positioned in a curved manner inside of a headlight:

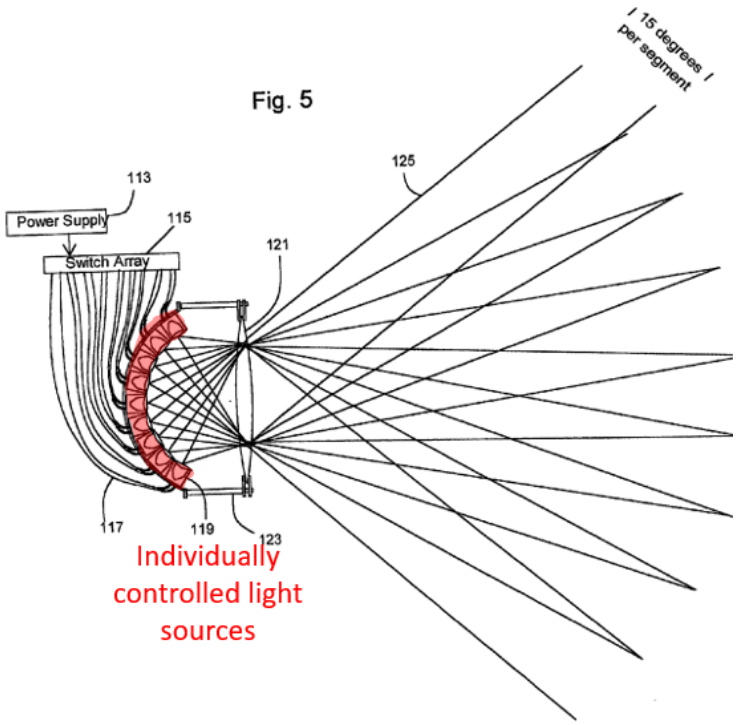

(Alden, Fig. 5, [0029].) Alongside this, Alden’s system includes (a) a “sensor unit” to detect objects along the road and (b) a “light control circuit” with a “CPU” to adjust the individual LEDs based on sensor data. (*Id.*, Figs. 2-3, [0026]-[0027].)

Alden teaches that, with its individually-controllable LEDs, a vehicle can “emit[] a low beam illumination 35 in a first headlight distribution sector while concurrently emitting a high beam, illumination 37 in a second headlight distribution

sector," with "[t]he low beam illumination being emitted in response to the detection of an oncoming vehicle 33" to reduce "glare":

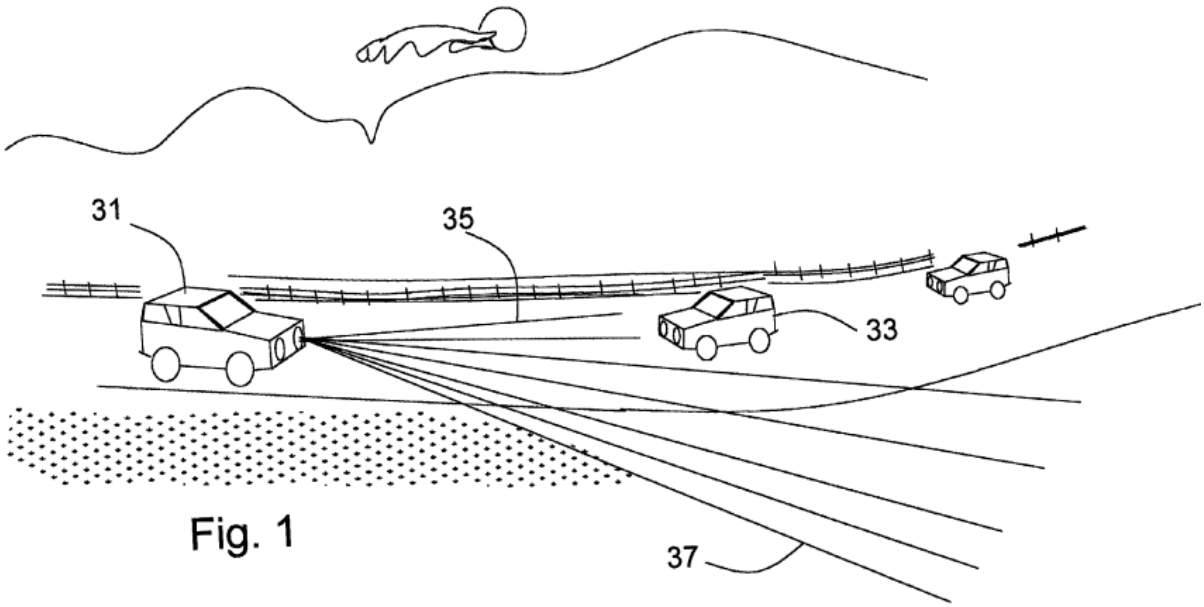

Fig. 1

(*Id.*, Fig. 1, [0004], [0025].) Alden's system can also be used to "concentrate light" to "look around corners," "look up a hill," and "look down a hill," all "in response to road conditions." (*Id.*, Figs. 11-13, [0036]-[0038].)

A. <u>Ground 1</u> – Alden Anticipates and Renders Obvious Claims 24-27, 29-35, 37-43, 45-47

1. Independent Claim 24

Alden anticipates and renders obvious Claim 24. (Papanikolopoulos Decl., ¶¶50-75.)

<u>24[pre]</u>: ***An illuminating device having automatic control of light provided to an illuminated area comprising:***

Alden discloses Claim 24[pre] to the extent limiting. (*Id.*, ¶51.) Alden's system is "for ***automatically controlling*** the distribution of a headlight in response to environmental conditions." (*Id.*, [0006]; *see also* Abstract.)[5] In Alden, a "first vehicle 31" includes an "automatic segmented illumination" headlight system ("illuminating device"), allowing the vehicle to emit different illumination in different areas in its field-of-view, such as emitting "a low beam illumination 35 in a first headlight distribution sector while concurrently emitting a high beam, illumination 37 in a second headlight distribution sector":

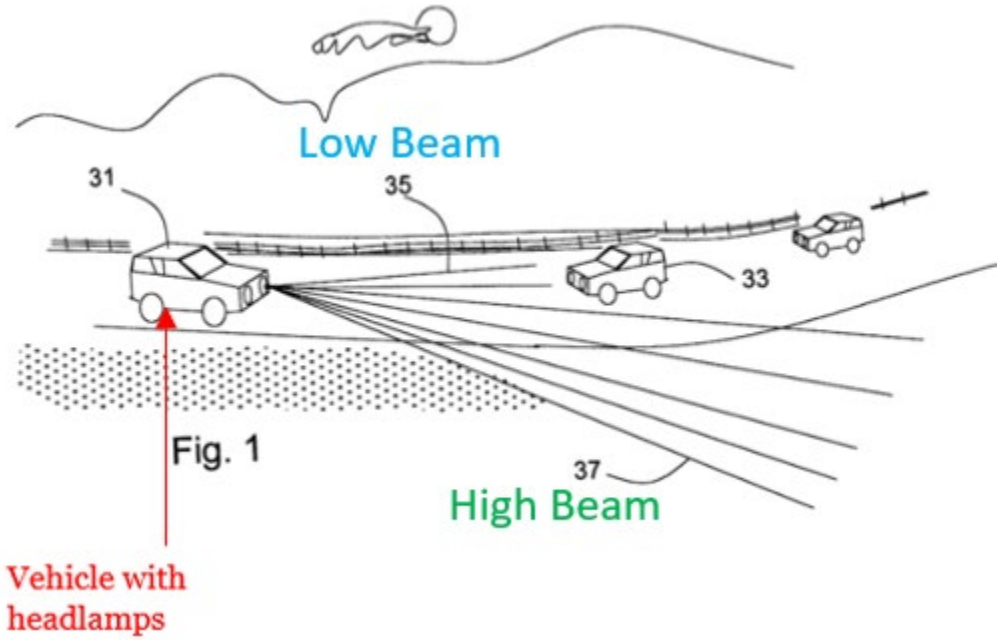

[5] All emphasis added unless otherwise noted.

(*Id.*, [0025], Fig. 1 (annotated); *see also* [0026], [0029].)

<u>24[a]</u>: *a structure for incorporating illuminating device elements, wherein the structure comprises a motor vehicle;*

Alden discloses Claim 24[a]. (Papanikolopoulos Decl., ¶¶52-53.) Alden's system is for headlights on a "structure compris[ing] a motor vehicle." (Alden, Figs. 1-2, Fig. 11, [0025].) *See also supra* Claim 24[pre]. Alden's headlight system includes numerous components ("illuminating device elements") to incorporate into the vehicle, including: "segmented beam headlight" (61); "sensor unit" (45); and "light control circuit, logic, and memory" (55):

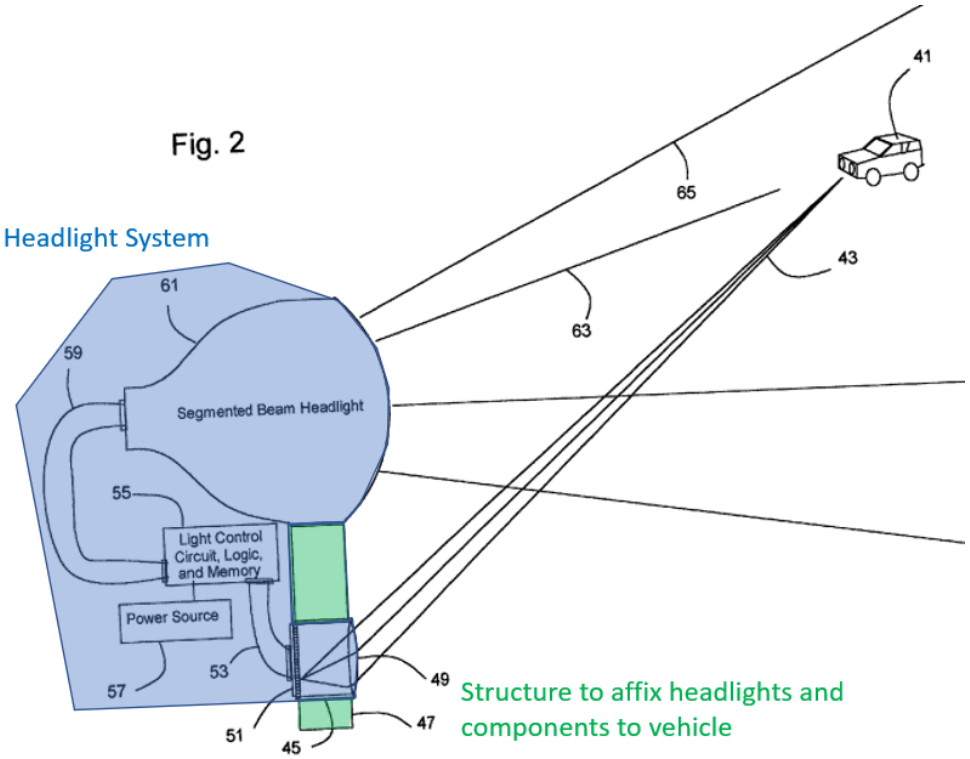

(*Id.*, [0026], Fig. 2 (annotated).) Alden explains these are "mounted on an equipped automobile 47 (47 being a part of the automobile—the [full] automobile is not shown)." (*Id.*, [0026].)

<u>24[b]</u>: *a plurality of individually controllable LEDs incorporated in the structure via at least one headlamp mounted to the structure, each headlamp including at least one of the LEDs, the LEDs in communication with a power source;*

Alden discloses Claim 24[b]. (Papanikolopoulos Decl., ¶¶54-55.) Alden's "segmented beam" headlights 61 are incorporated into a vehicle 47. *See supra* Claim 24[a]. (*See also* Alden, Figs. 1-2.) Each headlight can include an "array of individual lighting elements," with each lighting element being a "white ***LED*** (or alternate lighting mechanism)." (*Id.*, [0029].) Further, this LED array ("lighting elements 119") is in communication with a power source ("power supply 113") via a "switch array 115" and "segment wire 117":

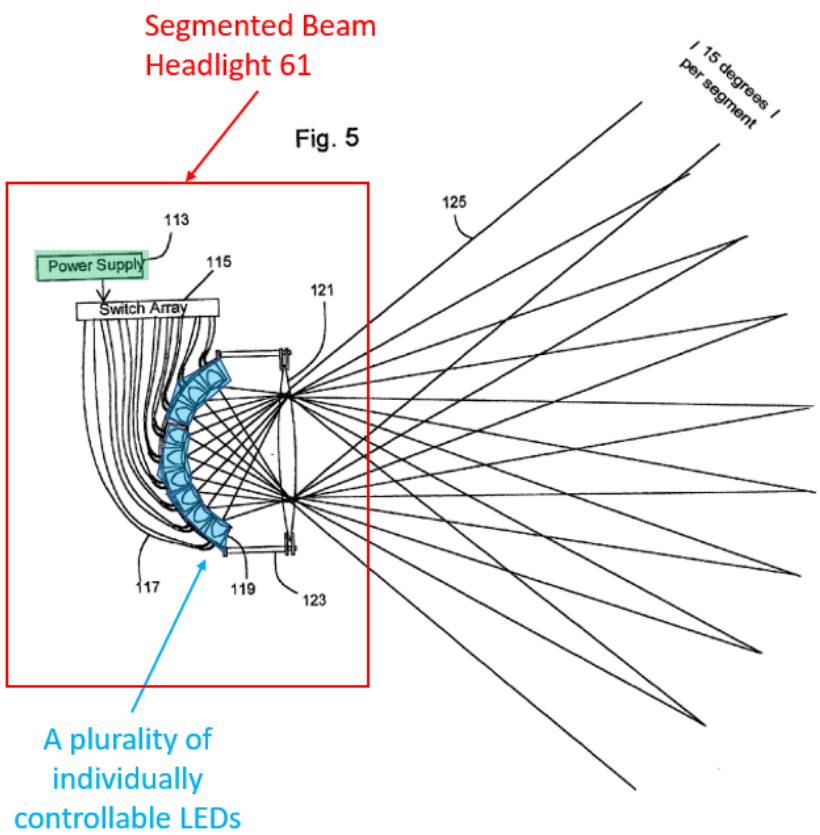

(*Id.*, Fig. 5 (annotated), [0029]; *see also* Fig. 2.)

Each lighting element 119 (*e.g.*, LED) is also "***independently controlled*** by… an array of switches." (*Id.*, [0029].) Alden discloses that each LED is at a different angle based on its position along a curve in the headlight, such that light from each LED "falls within a defined area of the light distribution area." (*Id.*) Alden further discloses that power to each LED 119 "is controlled by the CPU which dictates its respective switch characteristics at [switch array] 115 such that the power from a power supply 113 carried via segment wire 117 is controlled in response to the sensed environmental conditions." (*Id.*) This individual LED control enables Alden to produce different illuminations in different areas, such as

"a high beam in a first sector 65 [where there is no other vehicle] while concurrently producing a low beam in a second respective sector 63 (or dim beam) where the 41 [other vehicle] is sensed":

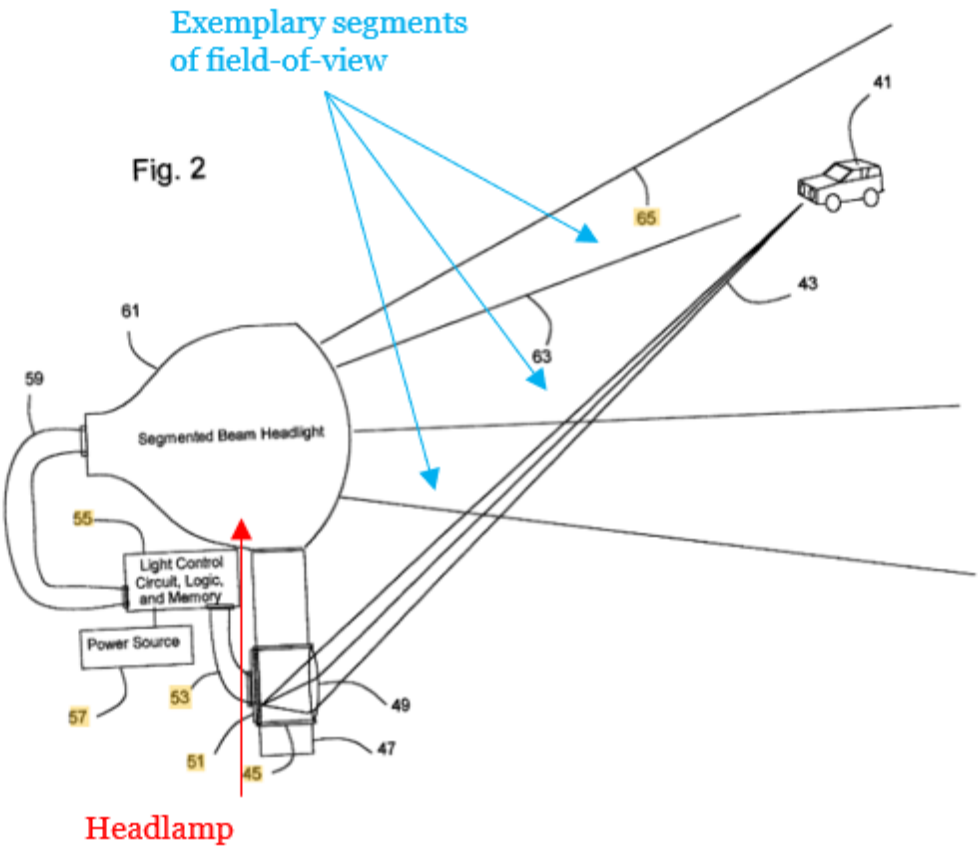

(*Id.*, Fig.2 (annotated), [0026]; *see also* [0027]-[0029], Figs. 11-13, [0036]-[0038].)

<u>24[c]</u>: *electronic circuitry apparatus for the controlled powering of the LEDs and other of the illuminating device elements;*

Alden discloses Claim 24[c]. (Papanikolopoulos Decl., ¶¶56-58.) Alden's headlight system includes a "left light ***control circuit***" (55a) and a "right light ***control circuit***" (55b):

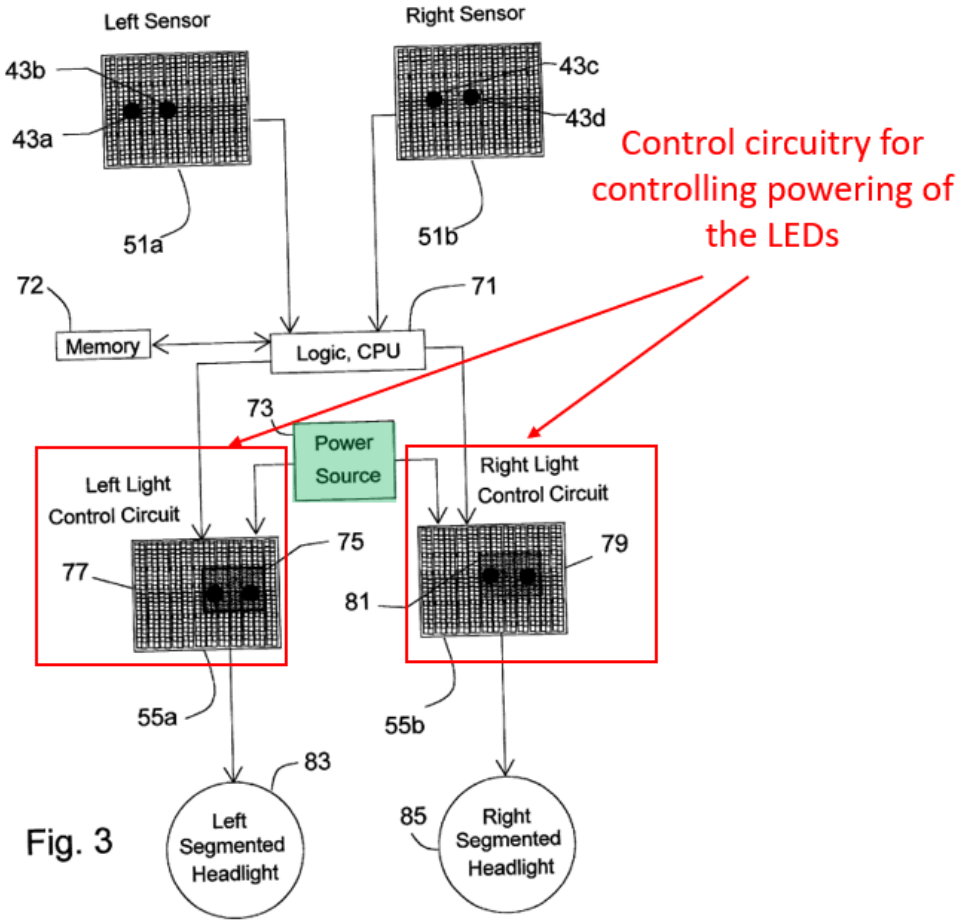

(Alden, Fig. 3 (annotated).)

These control circuits (*e.g.*, "electronic circuitry apparatus") control power to various "illuminating device elements," including segmented power cables or wires which carry the power to the left and right segmented headlights and LEDs in each headlight. (*Id.*, [0026], [0029], Figs. 2, 5; *see also* Papanikolopoulos Decl., ¶57.) Further, the control circuitry "controls the power flow" to the segmented headlights to independently control the LED lighting elements. (Alden, [0026]-[0027]; *see also* [0006], [0008], Fig. 4, [0028].) For example, where data from sensors 51a, 51b indicates the presence of another vehicle 41, the control circuitry

"controls the power flow" so that the headlight "distributes high beams throughout its distribution areas except in a box in the direction of the 41." (*Id.*, [0027].)

Additionally, Alden discloses that the control circuits include "segmented headlight control switch array switches," which provide power to the different light elements in the segmented headlights, causing certain "portions" of the headlight to "dim" while other portions are switched "on high beam." (*Id.*, [0027].) This switch array control circuity is further illustrated in Figure 5, where the "switch array" controls power flow to each "segment wire 117" and corresponding "lighting element 119":

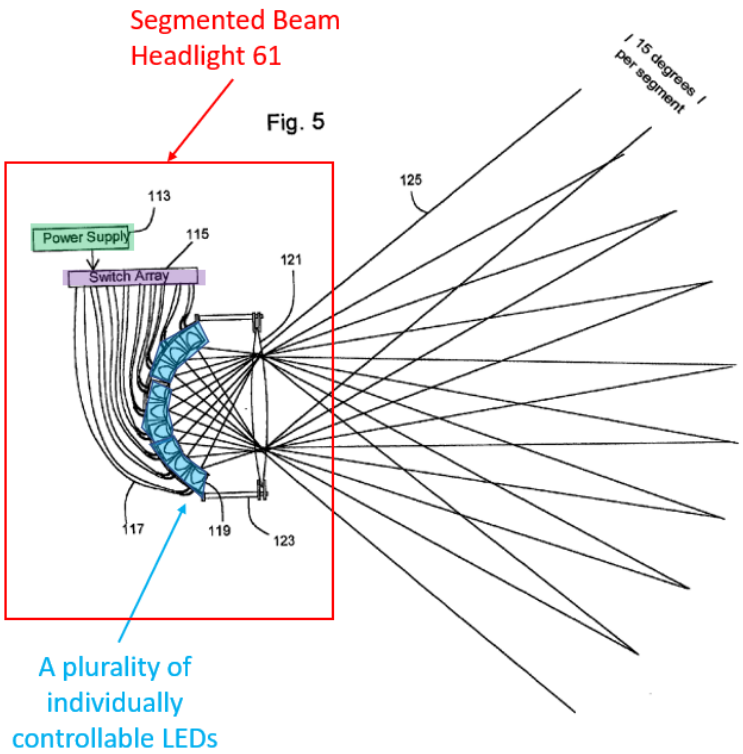

(*Id.*, Fig. 5 (annotated).) Alden discloses each switch being "controlled by the CPU and logic previously described. For example the power to 119 is controlled by the

CPU which dictates its respective switch characteristics at 115 such that the power from a power supply 113 carried via segment wire 117 is controlled in response to the sensed environmental conditions." (*Id.*, [0047], Fig. 5.)[6]

<u>24[d]</u>: *one or more processors;*

Alden discloses Claim 24[d]. (Papanikolopoulos Decl., ¶59.) Alden discloses "one or more processors":

[6] During reexamination, the Examiner interpreted "electronic circuitry apparatus…" as means-plus-function, in particular as "a controller described in a preferred embodiment as 'logic control electronics unit 7' of the '551 patent disclosure." (EX1010, Notice of Intent to Issue a Reexam Certificate.) If the Board considers this a means-plus-function limitation and similarly construes it as being "logic control electronics unit 7" and equivalents thereof, Alden discloses the same. As explain, Alden discloses a logic CPU that provides instructions to left and right control circuitry output electronics to the control the power to each lighting element. (*See, e.g.*, Alden, Figs. 2-4, [0026]-[0028].)

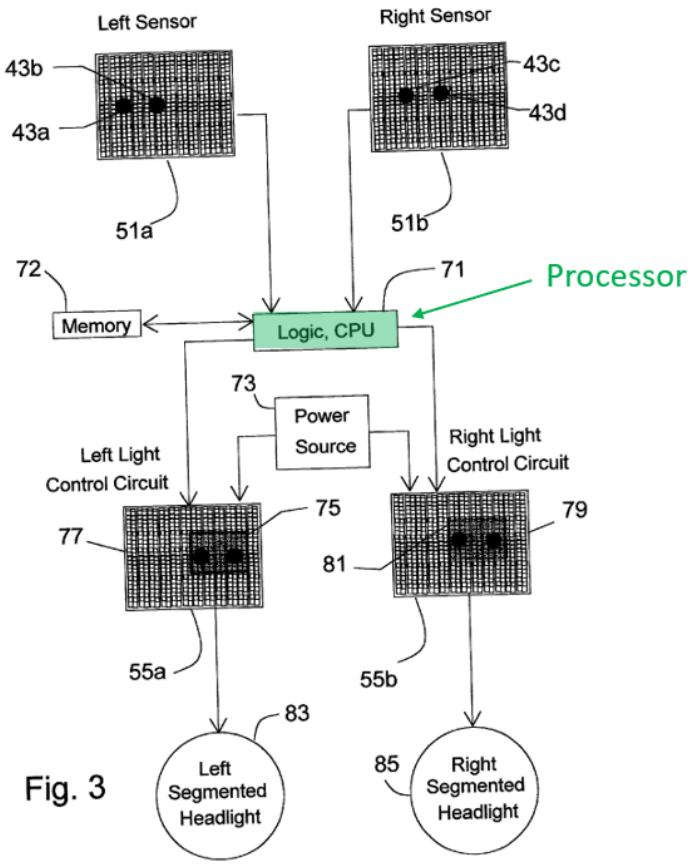

Fig. 3

(Alden, Fig. 3 (annotated); *see also* Fig. 2, [0026].) As shown in Figure 3, left and right sensors 51a-51b are connected to CPU 71 comprising logic. (*Id.*, [0027].) The CPU is connected to memory 72, and "[i]nformation from the [memory] 72 and [CPU] 71 is sent to control the power flow from a power source 73 via a left light control circuit 55a and a right light control circuit 55b." (*Id.*)

<u>24[e]</u>: [1] ***one or more sensors, including one or more cameras, placed on the structure*** **[2]** ***for detecting coordinate-specific information about the illuminated area,*** **[3]** ***at least one of said cameras in communication with power, and in communication with at least one of the one or more processors;***

Alden discloses Claim 24[e]. (Papanikolopoulos Dec., ¶¶60-62.) First, Alden discloses one or more "sensors" including "cameras" that are placed on the

"structure" (*i.e.*, vehicle). (*Id.*, ¶60.) Each headlight includes a "sensor unit 45" mounted on "vehicle 47" that can detect the presence of other vehicles:

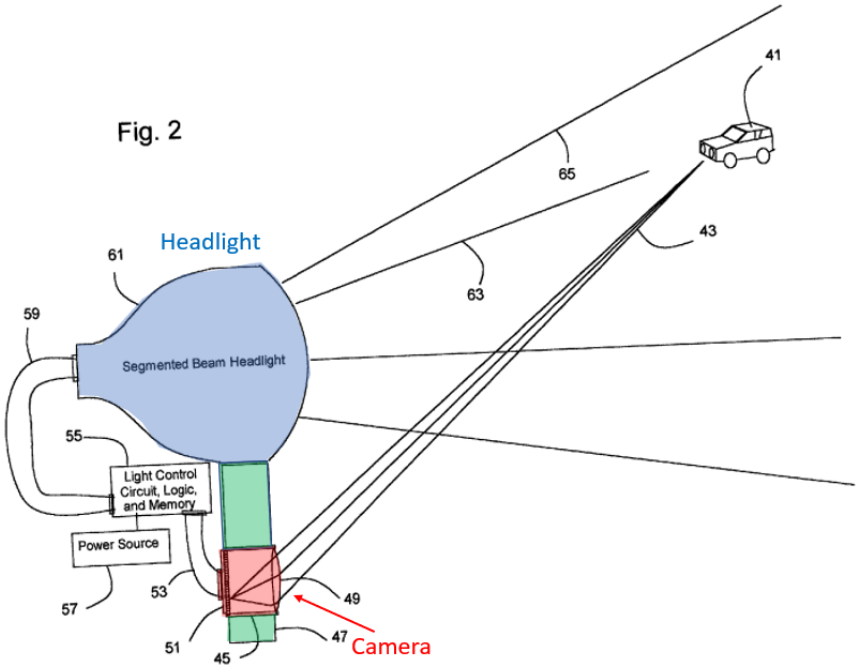

(Alden, [0026], Fig. 2 (annotated).) Alden discloses that each "sensor unit 45" can include a primary ***lens 49*** and a ***detector array 51***, and that the detector array can be a photodiode array or CCD (*i.e.*, camera sensors) that detects photon intensity (*i.e.*, light) and "convert[s] photons to electrons." (*Id.*) The converted electrons "corresponding to the position and intensity of light" are sent into a light control circuit 55. (*Id.,* [0026]-[0027].)

Second, Alden's sensors detect "coordinate-specific information about the illuminated area." (Papanikolopoulos Decl., ¶61.) In Alden, the system includes a "left sensor 51a" and a "right sensor 51b" which are used concurrently. (*Id.*, [0027].) Left sensor 51a detects the "position and intensity" of two headlights of an oncoming

vehicle "at a first illuminated spot 43a and a second illuminated spot 43b respectively," *i.e.*, coordinate specific information about the illuminated area. (*Id.*) Similarly, right sensor 51b detects position and intensity of the headlights of the oncoming vehicle as a first spot 43c and a second spot 43d respectively. (*Id.*)

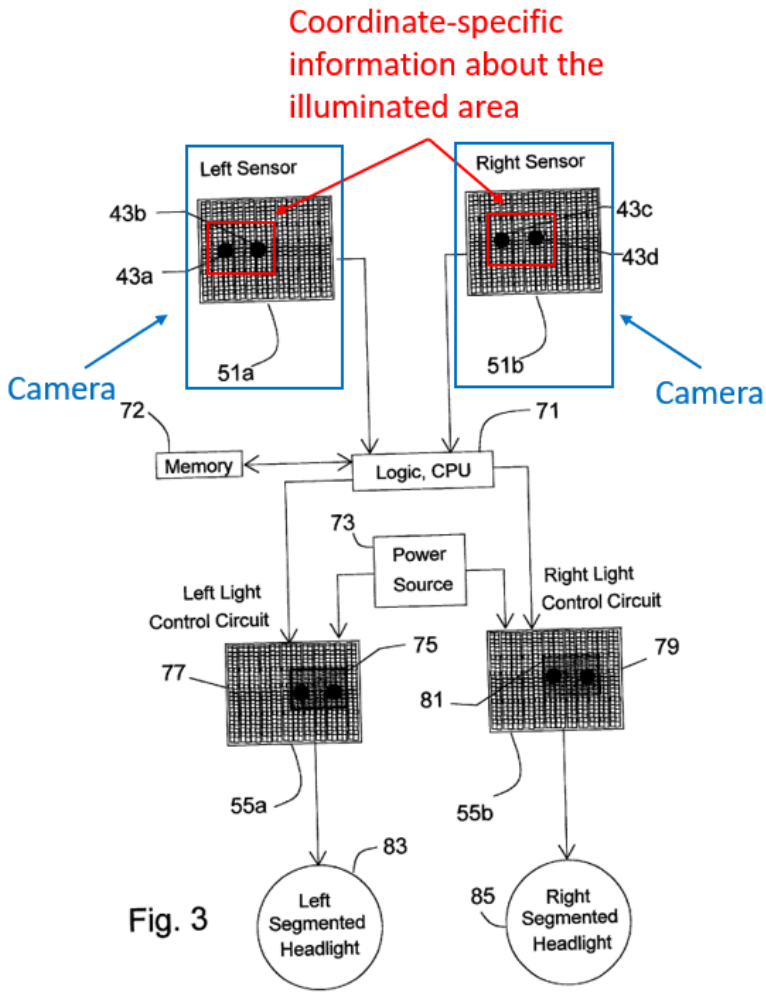

Fig. 3

(*Id.*, Fig.3 (annotated).) Alden discloses that the position of each light spot (*i.e.*, "coordinate specific information") is determined by checking the status of respective "sensor sectors" of each light sensor in an iterative process. (*Id.*, [0028], Fig. 4.)

Third, the left and right camera sensors 51a-51b are in "communication" with both the power supply ("power source 73") and processor ("CPU 71"), as these components are connected to each other through cables or wires. (*Id.*, Fig. 3 (showing interconnection of components); *see also* Fig. 2, [0026] (discussing ribbon cable connection between power supply and sensors), [0027].)

<u>24[f]</u>: *a controller, including at least one of the one or more processors, integrated with the structure via mounting, in communication with the LED controlling power electronic circuitry apparatus,*

Alden discloses Claim 24[f]. (Papanikolopoulos Decl., ¶¶63-64.) First, Alden discloses a light control circuit 55, which is integrated with the motor vehicle structure 47 via mounting:

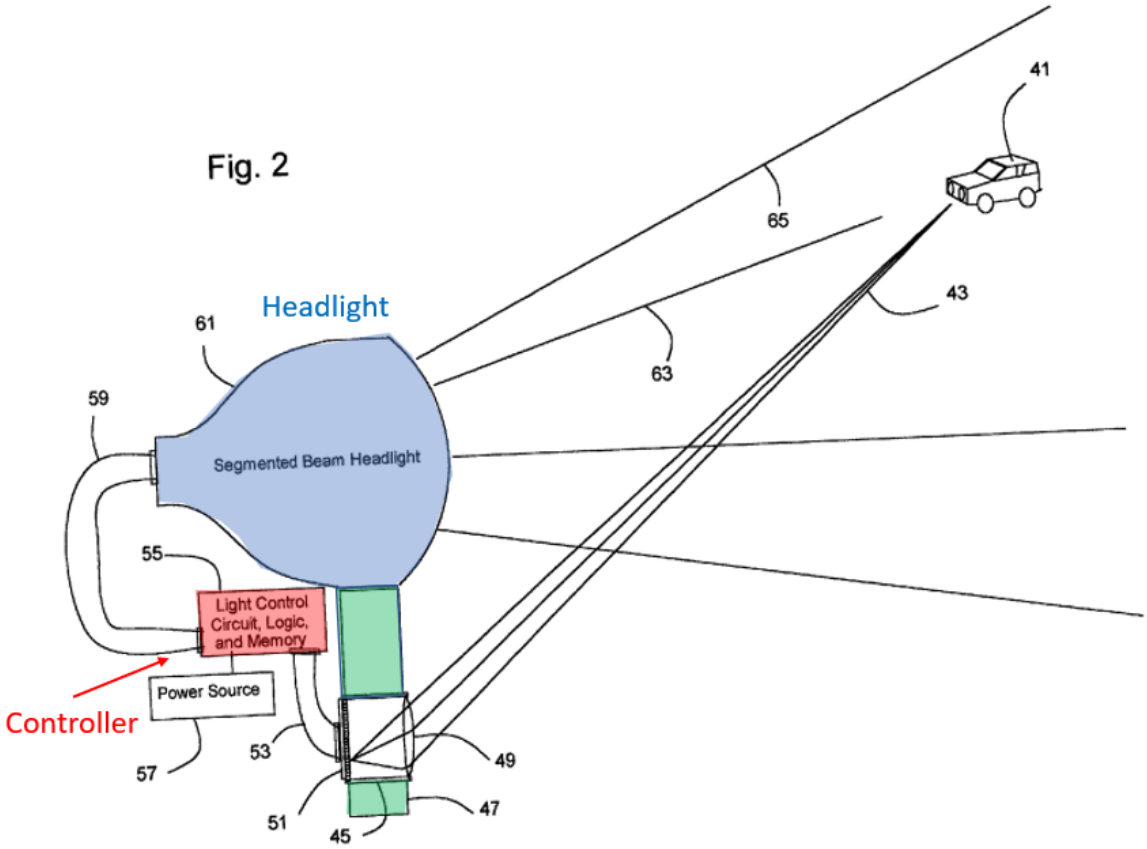

(Alden, Fig. 2 (annotated), [0026].) *See also supra* Claim 24[a].

Second, Alden discloses that this includes "controller" with a logic and CPU 71 (*i.e.*, "processor") and memory 72:

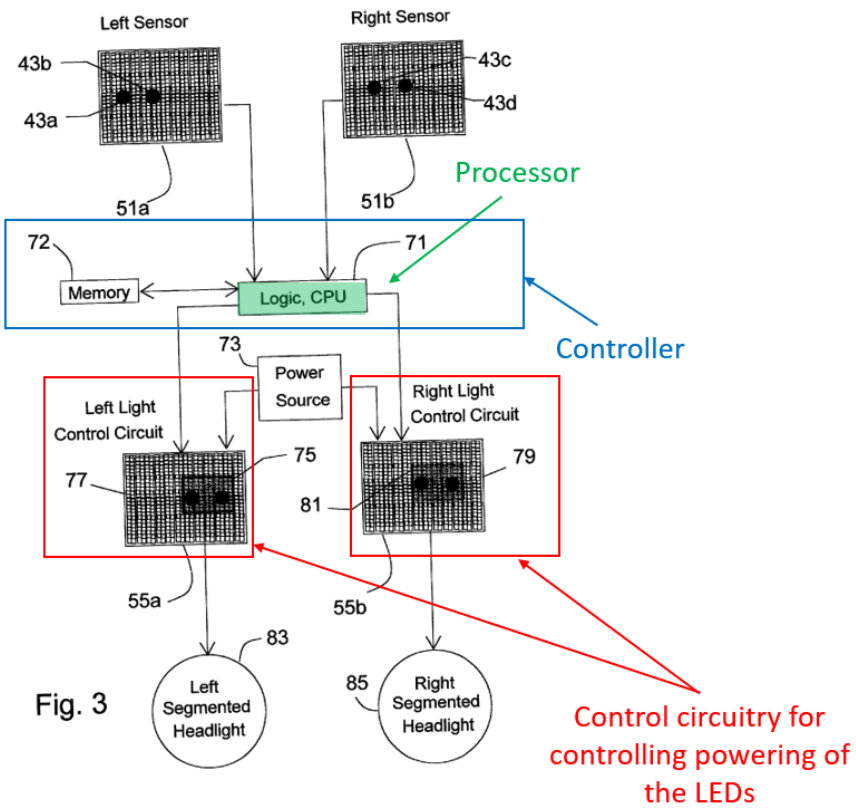

Fig. 3

(Alden, Fig. 3 (annotated), [0027].) As shown, CPU 71 is connected to and in direct "communication" with the left and right control circuits 55a-55b which control power to the LEDs. (*Id.*, [0027], [0029]) Alden further discloses that the CPU and control circuits are in "communication" when "[i]nformation from the [memory] 72 and [CPU] 71 is sent to control the power flow from a power source via a left light control circuit 55*a* and a right light control circuit 55*b*." (*Id.*, [0027].)

<u>24[g]</u>: *said controller arranged to process the information communicated from the cameras and to automatically control the light provided to the illuminated area; and*

Alden discloses Claim 24[g]. (Papanikolopoulos Decl., ¶¶65-70.) Alden's "controller" (*e.g.*, logic CPU 71) receives sensor data from left and right camera sensors 51a-51b:

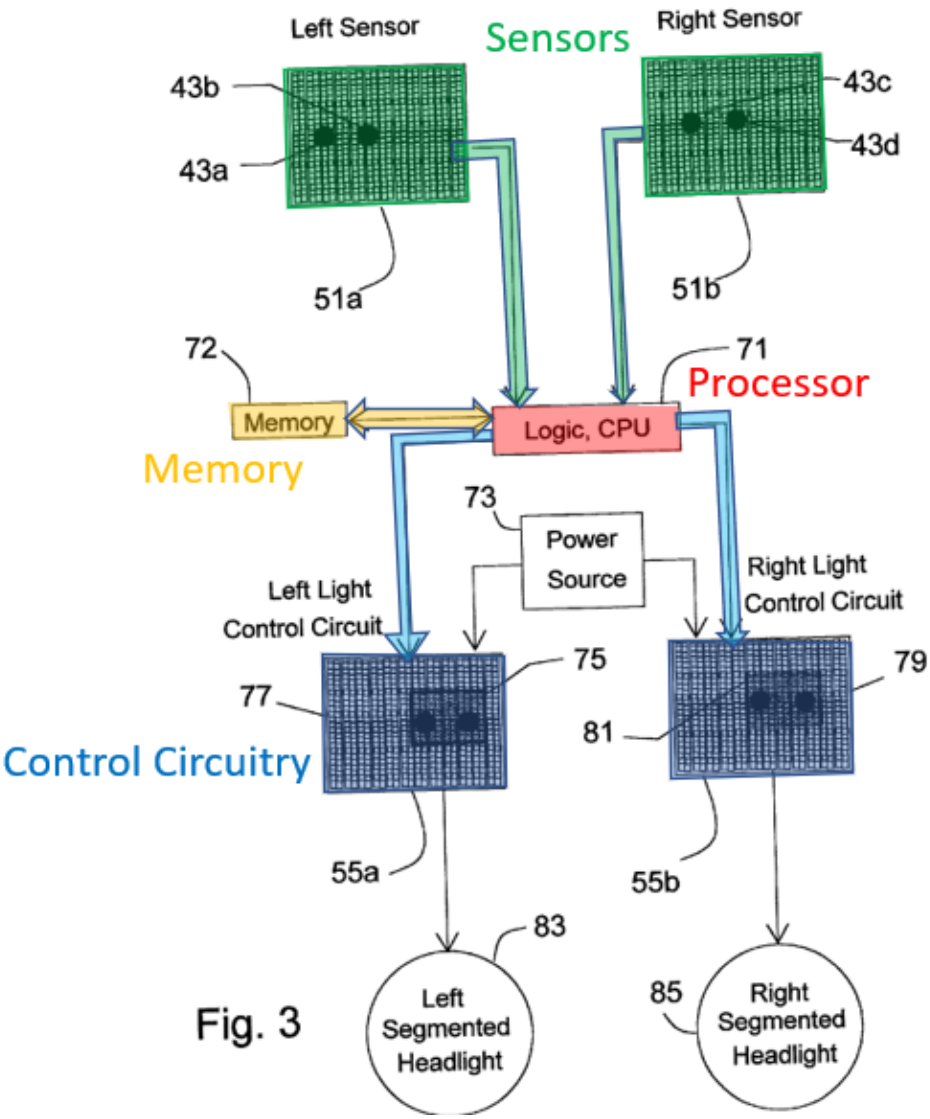

Fig. 3

(Alden, Fig. 3 (annotated), [0027]; *see also* [0026].) As shown, logic CPU 71 is connected to sensors 51a-51b and receives information from the sensors regarding

sensed light. (*Id.*, [0027].) In particular, each sensor "detects the two headlights of 41 [other vehicle]" at first and second illuminated spots, and "[e]lectrons corresponding to the position and intensity of light are categorized by ***a logic and CPU 71 and stored in a memory 72***." (*Id.*) *See also supra* Claim 24[e].

CPU 71 "processes" this sensor data to: determine a location of the other vehicle; determine which sectors that vehicle is located in; and instruct the control circuitry to power the lighting elements in each headlight to switch to dimmed low beam light or to high beam light, depending on whether they direct light to the sectors where the other vehicle is located. (*Id.*, [0027]-[0029].) In particular, Alden discloses an "automatic segmented illumination" system. (*Id.*, [0006], [0008], [0025].) As part of this, its CPU continuously automatically determines illumination requirements for different sectors, or zones, in the area illuminated by the headlights using "controlling logic," such as shown in Figure 4:

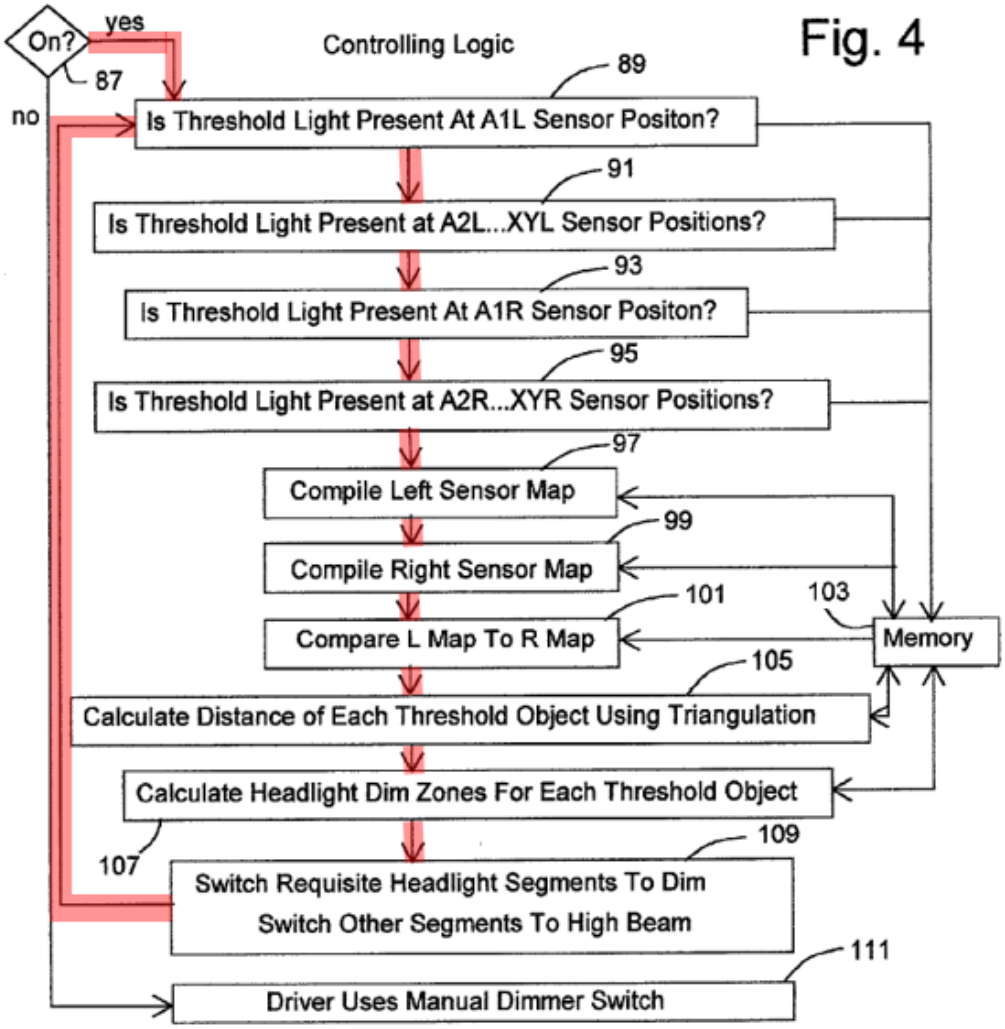

(*Id.*, Fig. 4 (annotated); *see also* Fig. 3, [0026]-[0028].)

As shown, the logic process can include: (a) processing sensor data to determine whether light above a threshold value is present at each sensor sector location (steps 89, 91, 93, 95), including categorizing the position and intensity of light sensed (*id.*, [0027]); (b) compiling sensor maps (steps 97, 99); (c) determining the "distance and intensity of each object sensed in a calculating process 101"; and (d) calculating distances to objects using a "triangulation process 105." (*Id.*, Fig. 4,

[0028]; *see also* Fig. 3, [0026]-[0027].) The CPU uses the distance data to "determine the intensity of light that will be produced by the 61 [headlight] in the corresponding headlight sectors," as shown in step 107—*i.e.*, selecting which LEDs to dim and which to set to high beam. (*Id*.) It then sends signals to the control circuits to switch some sectors to dim, low beam light, and others to high beam, as shown in step 109. (*Id.*, Fig. 4, [0027]-[0028]; *see also* Fig. 3, [0025]-[0026].)

As an example, when the CPU detects an oncoming vehicle in a particular sector, it will select and cause the group of LEDs pointing in the direction of that sector to dim, while selecting and causing other LEDs (*e.g.*, those not pointing at that sector) to switch to high beam, such as shown in Figure 5 below (annotated). As a result, "the light sent to the sensed vehicle location is dimmer than the light sent to all other areas of the headlight distribution area." (Alden, [0028].) Alden discloses that this reduces glare: "the driver of 41 [*i.e.*, the oncoming vehicle] has minimum glare while the driver of 47 [*i.e.*, the vehicle implementing the Alden system] has maximum light." (*Id.*; *see also* Abstract, [0005].)

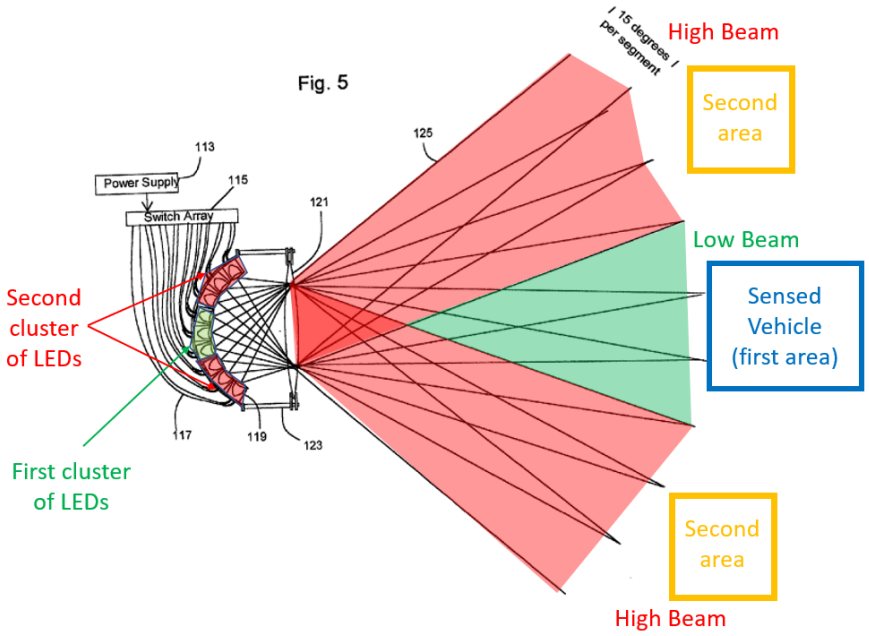

(*Id.*, Fig. 5 (annotated).)

Alden further explains that this is a real-time, automatic process that is continuously repeated. (*Id.*, [0028] (stating that the "process then begins again so as to be responsive to changing environmental conditions ***in real time***.").) Thus, if environmental conditions, including the location of other vehicles, change, the determined light distribution pattern for the headlights will also change. (Papanikolopoulos Decl., ¶70.) For example, Alden explains that if threshold light is detected at certain sensor positions indicating the presence of an oncoming vehicle, a determination is made that the intensity of light for the headlight sectors corresponding to those sensor positions should be switched to dim, or low beam. (*Id.*, Fig. 4, [0027]-[0028]; *see also* Fig. 3; Papanikolopoulos Decl., ¶70.) If, when the process is repeated, the position of the other vehicle changes, so threshold light

is no longer detected at those same sensor positions, then the system makes a determination to switch the corresponding sectors from dim, low beam to high beam. (*Id.*) In sum, as part of the real-time process, Alden is continuously determining whether each sector should be dimmed low beam or high beam. (Papanikolopoulos Decl., ¶70.)

<u>24[h]</u>: *memory storing instructions that, when executed by one or more processors of the controller, enable the controller to:*

Alden discloses Claim 24[h]. (Papanikolopoulos Decl., ¶71.) Alden discloses that CPU 71 ("processor[] of the controller") is coupled to memory 72 and detects objects and determines whether to adjust lighting elements:

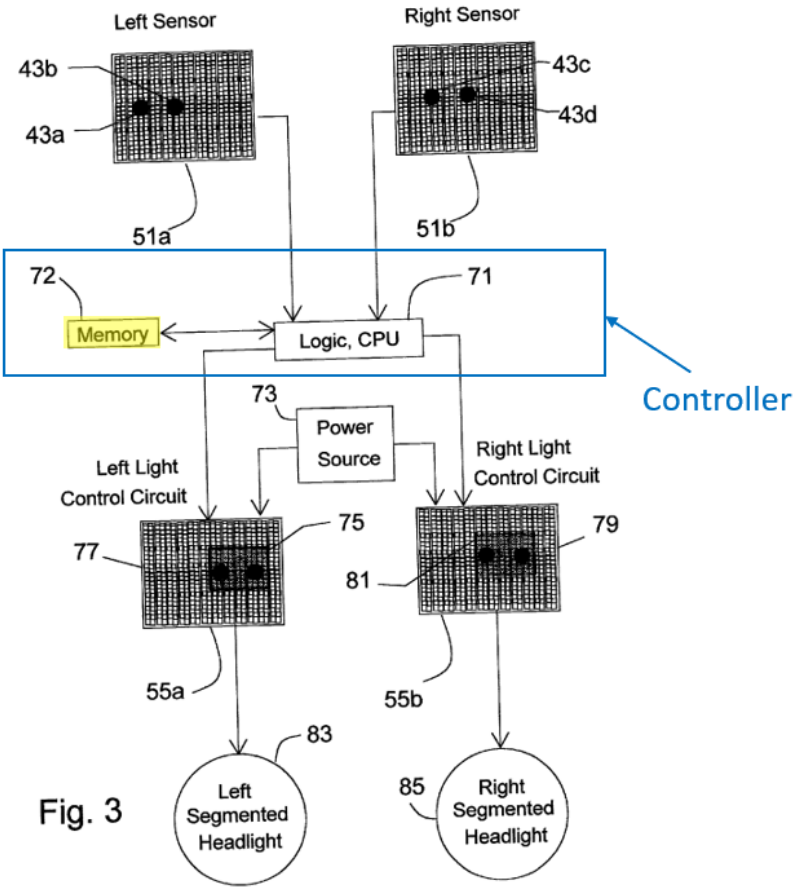

Fig. 3

(*Id.*, Fig. 3 (annotated), [0027] (describing logic used and data being "stored in a memory 72"); *see also* Fig. 2, [0026].) Further, Figure 4 of Alden discloses the instructions ("logic process") that the CPU 71 may execute, which would be stored in the memory, to process sensor data and control the power flow to each LED within the headlights. (*Id.*, [0028], Fig. 4; Papanikolopoulos Decl., ¶71.) *See also supra* Claim 24[g].

<u>24[i]</u>: *determine coordinates corresponding to another vehicle based on the coordinate-specific information; and*

Alden discloses Claim 24[i]. (Papanikolopoulos Decl., ¶72.) As discussed, Alden discloses determining the location, or coordinates, of a sensed other vehicle based on the coordinate-specific information from the left and right light sensors 51a-51b. *See supra* Claim 24[e], 24[g]. For example, Alden's sensors detect light from the headlights of an oncoming vehicle in an array having both horizontal and vertical dimensions (43a-43d), and this coordinate-specific information is then used to determine the position of the oncoming vehicle, as can be seen in Figure 3:

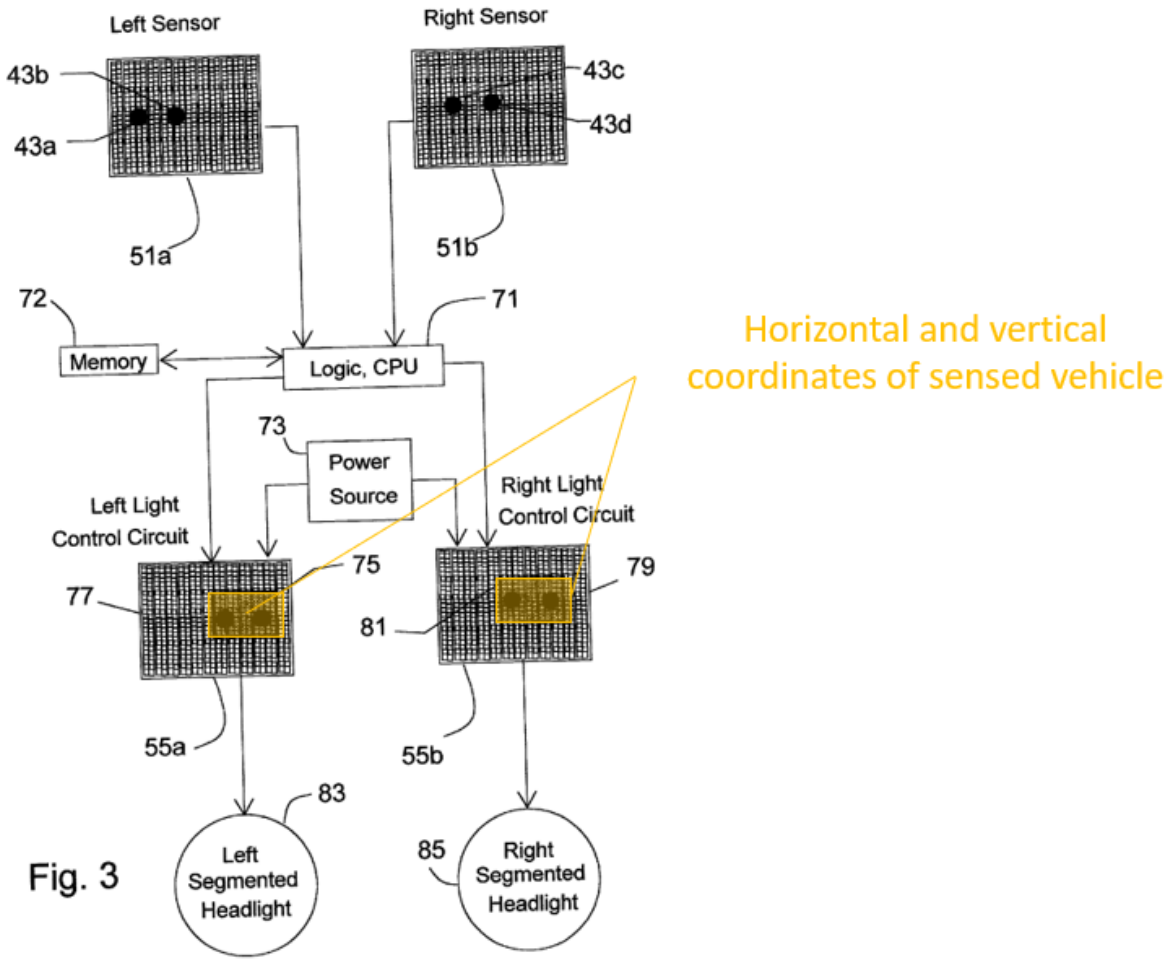

(Alden, Fig. 3 (annotated), [0027].)

<u>24[j]</u>: *select a cluster of the LEDs that emit light toward at portion of the other vehicle based on the LEDs having emission aimings associated with the first coordinates; and*

Alden discloses claim 24[j]. (Papanikolopoulos Decl., ¶¶73-74.) First, Alden discloses illuminating a portion of sensed other vehicles by selecting a "cluster of LEDs" to emit light (*e.g.*, low beam) in an area that includes the other vehicle. *See supra* Claim 24[g]. As discussed, Alden's CPU 71 processes the sensor data to determine which LEDs direct light to the area of an oncoming vehicle and causes

those LEDs to emit low beam in the area (63) of the detected vehicle (41), while other LED groups, such as in other areas (65), are switched to different light:

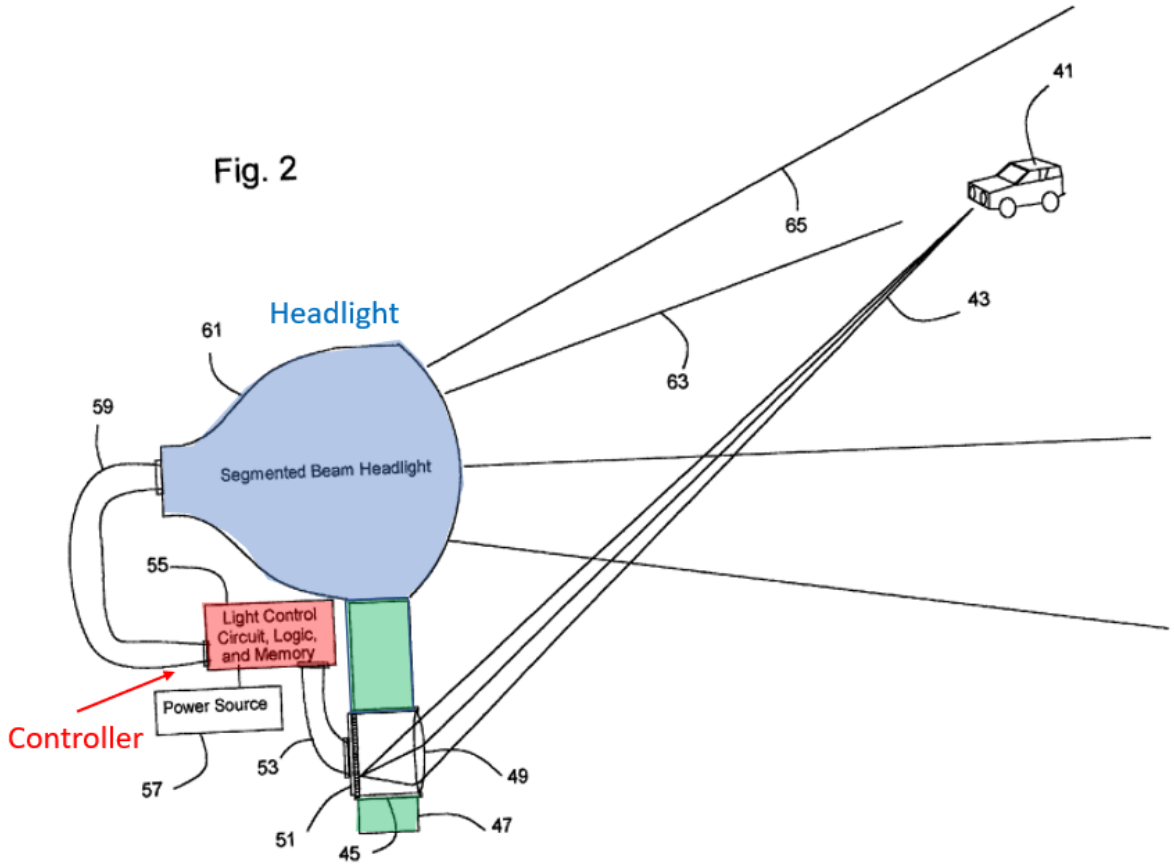

(Alden, Fig. 2 (annotated), [0026].)

Second, the "cluster of LEDs" selected to illuminate the area is based on those LEDs having "aimings" associated with positions of the sensed vehicle. As discussed, Alden's lighting elements 119 are "on a curve along the focal point of a headlight lens 121 such that ***the light*** from each lighting element ***goes into a specified portion (or portions)*** of the headlight distribution area" ahead of the vehicle:

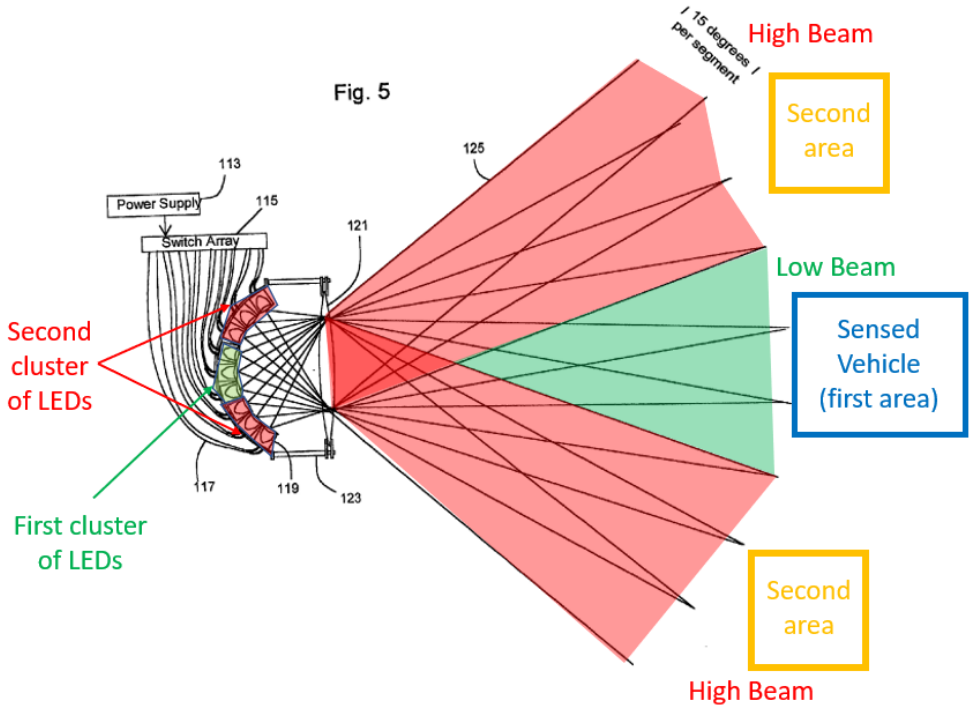

(Alden, [0029], Fig. 5 (annotated).) Thus, each lighting element is directed to a "specified" area, and when Alden illuminates an area (such as one with an oncoming vehicle) with low beam light, it will select and adjust those LEDs that are directing light into that corresponding area where the vehicle is. (*Id.*, [0027]-[0028]; Papanikolopoulos Decl., ¶74.) *See also supra* 24[b], 24[g].

<u>24[k]</u>: *change emission of the selected cluster of LEDs relative to emission of other LEDs not included in the cluster to create headlamp illumination illuminating past the other vehicle while preventing glare to a driver of the other vehicle.*

Alden discloses claim 24[k]. (Papanikolopoulos Decl., ¶75.) As discussed, Alden discloses (a) changing emission of the selected cluster of LEDs, which direct light to sectors determined to contain another vehicle, to dimmed "low beam" intensity light, and (b) setting the light emitted from other LEDs, which

direct light to sectors where no other vehicle is detected (*i.e.,* "other LEDs not included in the cluster") to be "high beam" intensity light:

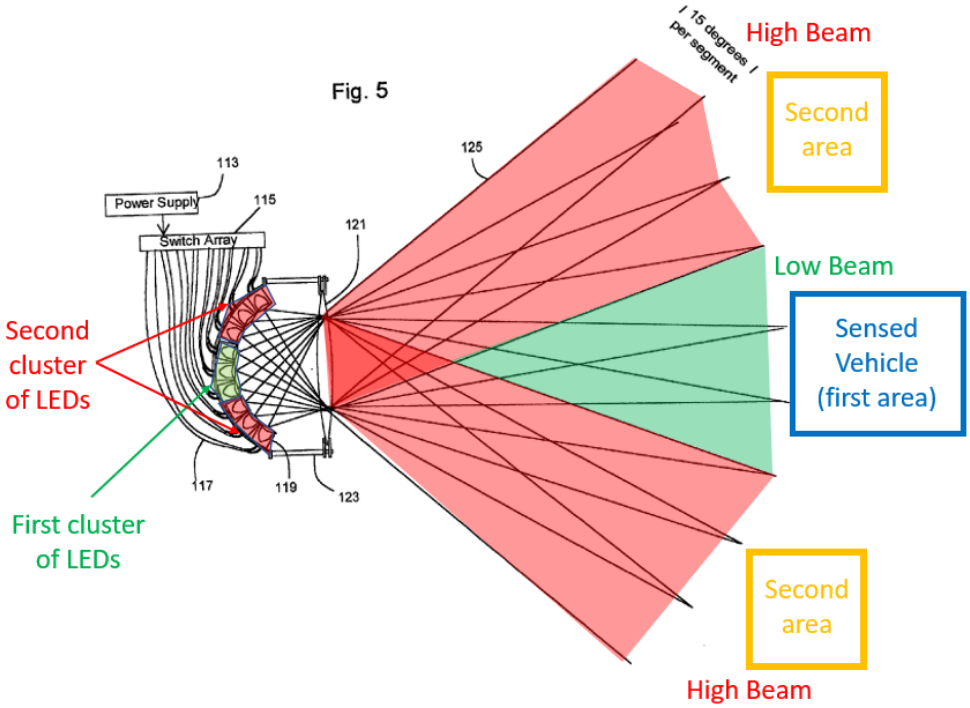

(*Id.*, Fig. 5 (annotated), [0026]-[0029].) *See also supra* Claims 24[g], 24[j]. That is, the selected cluster of LEDs have their emission changed to be dimmer, lower intensity light as compared to "high beam" light emitted from other LEDs. (Papanikolopoulos Decl., ¶75.) As a result, "the light sent to the sensed vehicle location is dimmer than the light sent to all other areas of the headlight distribution area." (Alden, [0028].) Alden discloses that this reduces glare: "the driver of 41 [*i.e.*, the oncoming vehicle] has minimum glare while the driver of 47 [*i.e.*, the vehicle implementing the Alden system] has maximum light." (*Id.*, [0027]-[0028]; *see also* Abstract, [0005].) *See also supra* Claim 24[g].

2. Dependent Claim 25

Alden anticipates and renders obvious Claim 25. (Papanikolopoulos Decl., ¶¶76-78.)

<u>25[a]</u>: *The illuminating device of claim 24, wherein: the changed emission includes a change to at least one of intensity or color or a change of at least one LED of the cluster to a non-emitting state; and*

Alden discloses Claim 25[a]. (*Id.*, ¶77.) Alden discloses that the changed emission of the cluster of LEDs that illuminate the sensed other vehicle includes a "change of intensity" of those LEDs to output dimmed, low beam light. *See supra* Claims 24[g], 24[k].

<u>25[b]</u>: *the cluster includes a plurality of the LEDs and the cluster includes non-contiguous LEDs.*

Alden discloses Claim 25[b]. (Papanikolopoulos Decl., ¶78.) Alden discloses that the cluster of lighting elements includes a plurality of LEDs. (Alden, [0029], Fig. 5.) *See supra* Claim 24[b]. The cluster can also include "non-contiguous" LEDs. For example, Alden discloses that the overall beam distribution is from both the left and right headlights. (*Id.*, [0027], Fig. 3.) In both headlights, certain LEDs form a cluster that will be dimmed to direct low beam at a sensed vehicle, while the rest of the LEDs will emit high beam. (*Id.*) That is, the overall emission from the LEDs in both the left and right headlights illuminates the area in front of the vehicle, including where other vehicles are detected, and the cluster of LEDs that are dimmed is comprised of LEDs in each headlight. (*Id.*, [0026]-0029], Figs. 1-3.) Because the

two headlights are separated from each other, LEDs in the cluster creating low beam light in the direction of a sensed vehicle are non-contiguous, as they are separated from each other by other LEDs in each of the two headlights. (Papanikolopoulos Decl., ¶78.)

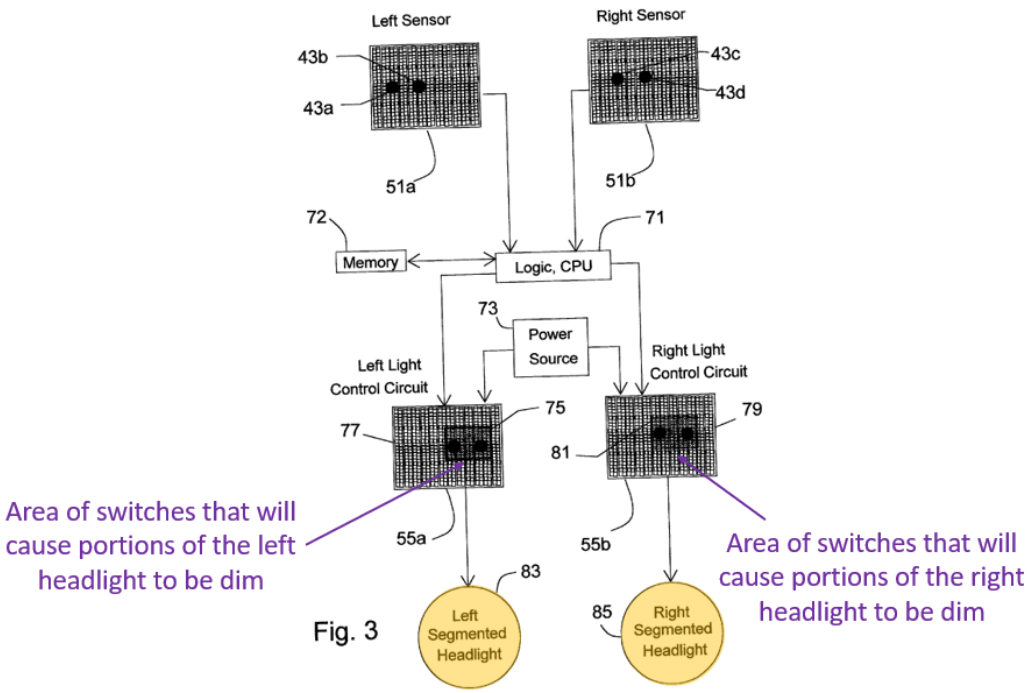

(*Id.*, Fig. 3 (annotated).) Additionally, a cluster of LEDs in a single headlamp can also include non-contiguous selected LEDs. (Papanikolopoulos Decl., ¶78.) For example, if three LEDs are selected (such as those in green), then the top and bottom-most LEDs would not be touching or sharing a border:

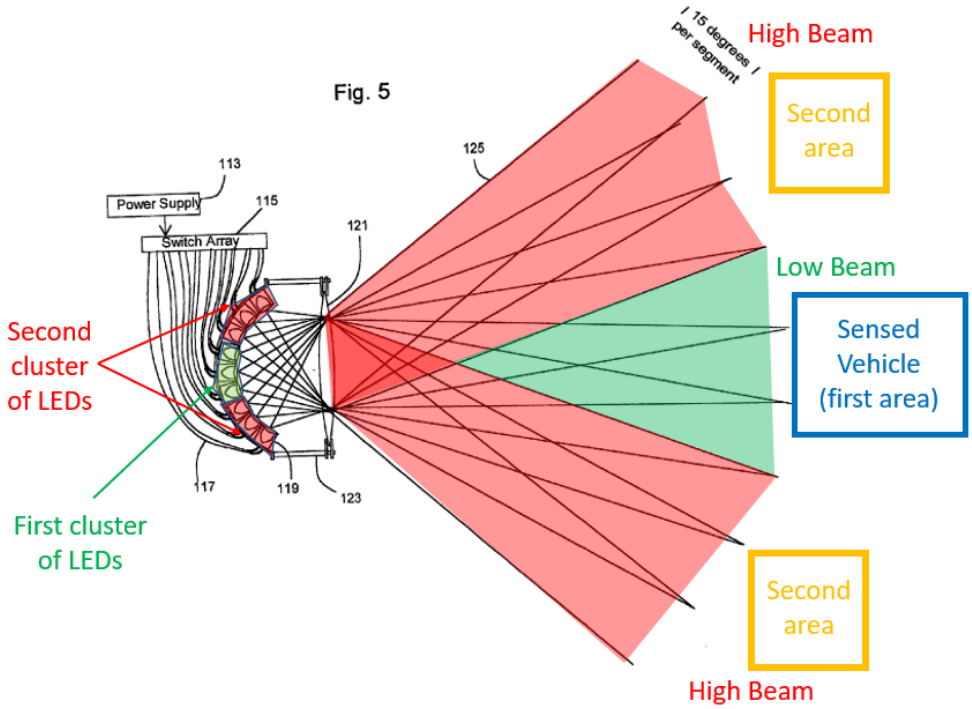

(*Id.*, Fig. 5 (annotated), [0026]-[0029].)

3. Independent Claim 32

<u>32[pre]-32[h]</u>

Claims 32[pre]-32[h] are nearly identical to Claims 24[pre]-24[h]. *See* Appendix A. Therefore, Claims 32[pre]-32[h] are disclosed by Alden for the reasons above. *See supra* Claims 24[pre]-24[h].

Claim 32[e] additionally recites one or more cameras "positioned to capture an image of at least one target." *See* Appendix A. This is disclosed by Alden. (Papanikolopoulos Decl., ¶¶80-81.) Alden includes a lens 49 that directs light to photodiode arrays or CCD detectors 51 (*i.e.*, "camera sensors"), which image lights of oncoming vehicles. (Alden, [0026]-[0028], Figs. 2-3.) This image data,

collected from the photodiode arrays or CCD detectors 51, is provided to the CPU 71 and stored in memory 72. (*Id.*) *See also supra* Claim 24[e].

For example, Alden discloses that when there is an oncoming vehicle in the area of the "equipped" vehicle, light from the oncoming vehicle "passes through [the] primary lens 49" in the sensor unit 45, converges, and "fall[s] upon one or more sectors [] within the detector array 51 where it is detected." (Alden, [0026].) In particular, the sensors capture an image of the "two headlights" of an oncoming vehicle as "illuminated light spots," which are stored as a "map of sensed light." (*Id.*, [0027]-[0028], Figs. 3-4.)

<u>32[i]</u>: [1] ***create a beam of diminished illumination illuminating at least a portion of the at least one target with non-glaring illumination, created in a broader field of illumination having different intensity than the beam,*** **[2]** ***by one or more changes to characteristics of first light of a cluster of the LEDs providing the first light directed at the at least a portion and creating the beam,*** **[3]** ***the beam diminished in intensity relative to the broader field of illumination illuminating at least above and on both sides of the beam; and***

Alden discloses Claim 32[i]. (Papanikolopoulos Decl., ¶¶82-86.)

First, Alden discloses illuminating an oncoming vehicle (the "target") with dimmed low beam light to "reduce glare," *i.e.*, "non-glaring illumination," and illuminating a broader field of other areas where no other vehicle is detected with "high beam" intensity light. *See supra* Claim 24[g].

Second, in Alden this illumination is done by selecting a cluster of LEDs to emit a "first light" (*e.g.*, low beam) in an area that includes the object. As

discussed, CPU 71 processes the sensor data to determine which LEDs are in the area of an oncoming vehicle and causes those LEDs to emit a "first light" (*e.g.*, low beam) in the area (63) of the detected vehicle (41), while other LED groups, such as in other areas (65) (i.e., "the broader field of illumination"), are switched to different light:

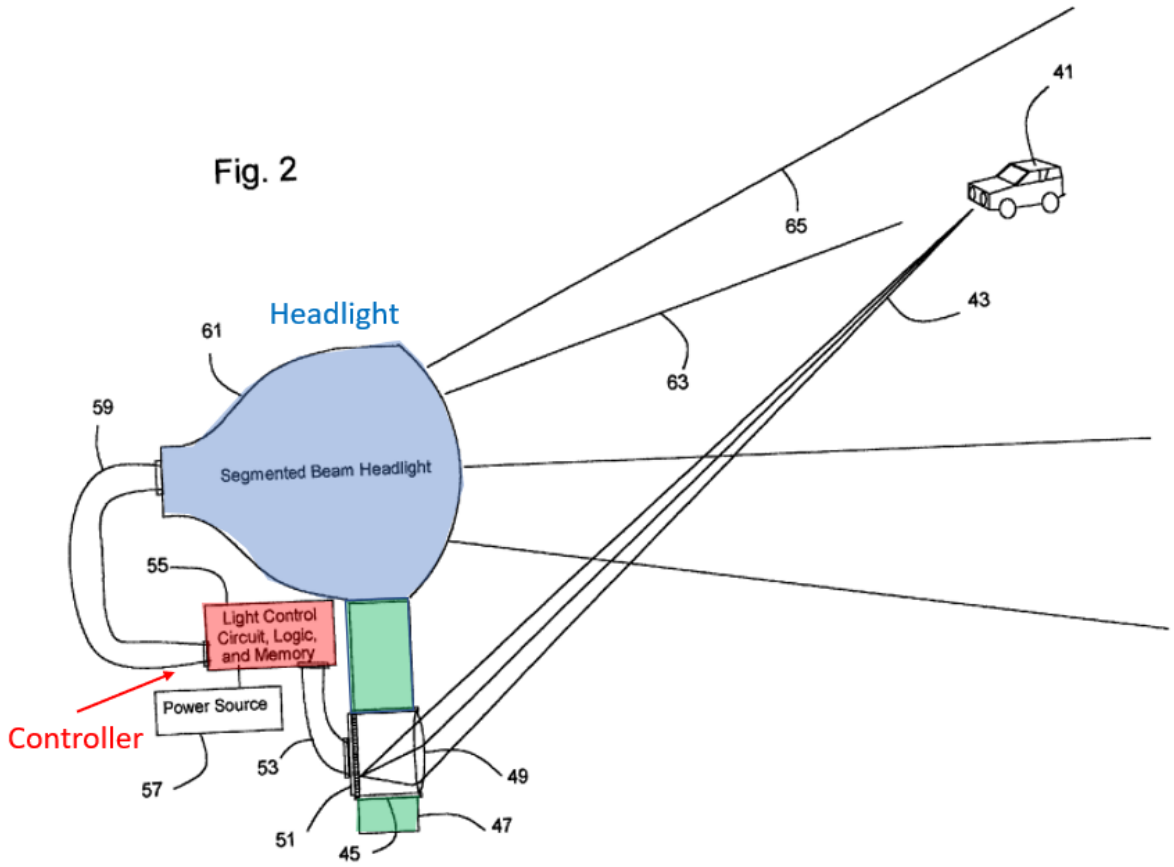

(Alden, Fig. 2 (annotated), [0026].) *See also supra* Claim 24[g].

Third, the beam illuminating the "target" is diminished in intensity relative to the broader field of illumination above and on the sides of the beam. For example, as shown in Figure 2 above, the broader illumination in other areas (65)

is high beam at least above and on both sides of the beam in the area (63) of the detected vehicle (41). (Papanikolopoulos Decl., ¶85.) Additionally, Alden senses the position of light emitted from oncoming headlights, such as 43a-43d, in its sensor array, and uses this information to determine the spatial (horizontal and vertical) position of the oncoming vehicle. *See supra* Claims 24[e], 24[i]. As Alden is diminishing light in the area of the sensed oncoming vehicle (55a-55b), only the intensity of that light is reduced relative to the broader field of illumination (77, 79) surrounding it:

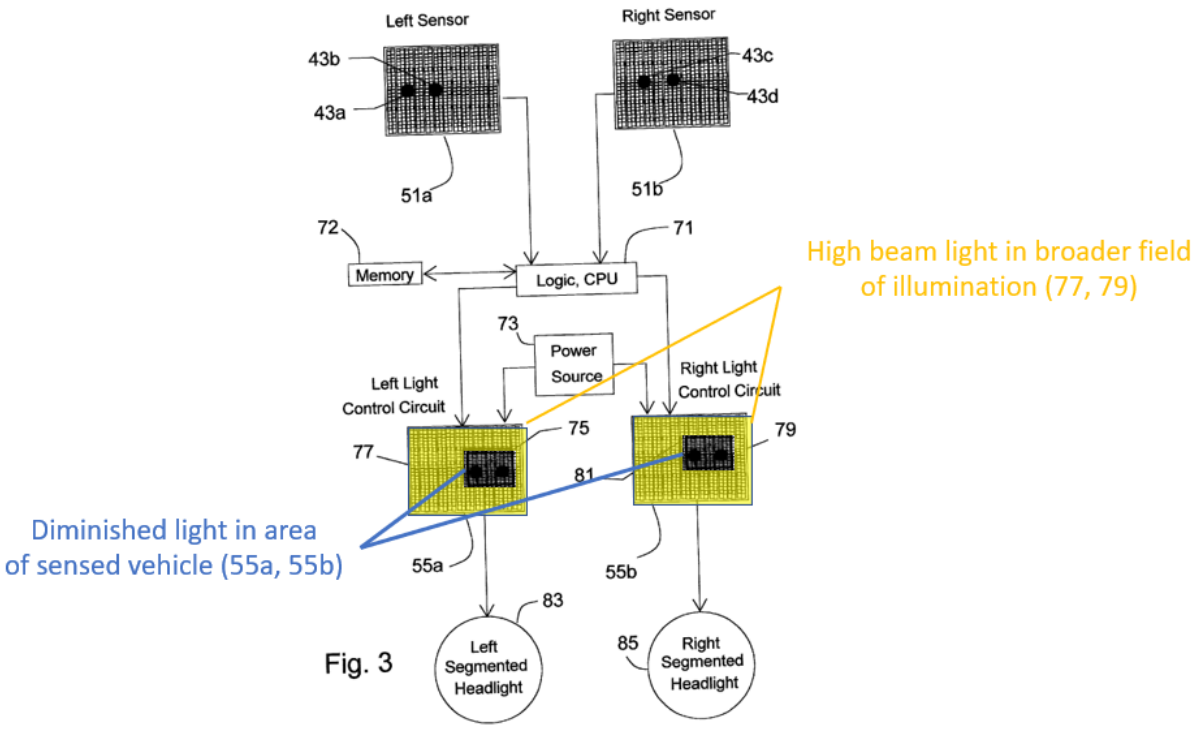

Fig. 3

(*Id.*, Fig. 3 (annotated); Papanikolopoulos Decl., ¶85.)[7]

<u>32[j]</u>: *follow, based at least in part on data from one or more of the cameras, the at least one target with the diminished illumination as the at least one target changes location relative to the motor vehicle.*

Alden discloses Claim 32[j]. (Papanikolopoulos Decl., ¶87.) As discussed, Alden discloses continuously: collecting sensor data from left and right light sensors 51a-51b (camera-sensors); calculating the position of a detected oncoming vehicle based on the sensor data; determining which portions or zones of the headlight distribution area are directed towards the detected vehicle; and determining control of the lighting elements, so that lighting elements corresponding to the portions or zones where the detected vehicle is located are switched to dim, low beam light, while lighting elements corresponding to portions or zones with no detected vehicle are switched to high beam light. (Alden, [0027]-[0028] (noting that the result of the process is that "the light sent to the sensed vehicle location is dimmer than the light

[7] Further, Alden's system enables one to look "around corners," "up a hill," and "down a hill," all "in response to road conditions," and a POSITA would have understood that these features would similarly enable the system to diminish light intensity in the area of a detected vehicle while switching to high beams in areas to the side and above the oncoming vehicle. (Alden, Figs. 11-13, [0036]-[0038], Papanikolopoulos Decl., ¶86.)

sent to all other areas of the headlight distribution area" and that the process "then ***begins again*** so as to be responsive to changing environmental conditions in ***real time***.").) *See supra* Claim 24[g]. That is, the determination of vehicle location and which lighting elements need to be switched to dim, low beam light and which need to be switched to high beam light is done continuously "in real time" in response to the sensor data. (Papanikolopoulos Decl., ¶87.) Thus, Alden discloses a real-time process where the position of the other vehicle is continuously sensed and the LEDs are continuously controlled to "follow" the sensed vehicle with dimmed, low beam illumination, as it is moving relative to the vehicle implementing the Alden system. (*Id*.)

4. Dependent Claim 33

Alden anticipates or renders obvious Claim 33. (Papanikolopoulos Decl., ¶¶88-92.)

<u>33[a]</u>: *memory further stores instructions that, when executed by one or more processors of the controller, enable the controller to select the cluster of LEDs based at least in part on known aimings of the first light associated with the first cluster having a correlation to the at least the portion, the known aimings based at least in part on at least one of known directionality of light emitted by the first cluster or known directionality of light emitted by the first cluster exiting the headlamp;*

Alden discloses Claim 33[a]. (*Id.*, ¶89.) As discussed, Alden's memory stores instructions which are executed by logic CPU 71 (such as those shown in Figure 4) and which enable CPU 71 to control the LEDs, so as to illuminate the portions of

the headlight distribution area containing a detected vehicle in dimmed, low beam light. *See supra* Claim 24[g]-[h]. As also discussed, Alden's LEDs are positioned on a curve in different directions or aimings, and if an oncoming vehicle is detected, the processor of the controller (*e.g.*, CPU 71) selects the appropriate LEDs to dim based on whether they are positioned to emit light in the direction of the oncoming vehicle. *See supra* Claim 24[j].

<u>33[b]</u>: *the data includes image data;*

Alden discloses Claim 33[b]. (Papanikolopoulos Decl., ¶90.) Alden's "camera sensors" include a lens 49 that directs light to photodiode arrays or CCD detectors 51, which image lights of oncoming vehicles. (Alden, [0026]-[0028], Figs. 2-3.) The image data, collected from the photodiode arrays or CCD detectors 51 is provided to the CPU 71 and stored in memory 72. (*Id.*) Alden further discloses that "maps" of sensed light from the sensors are determined from the sensor data and stored in memory. (*Id.*, [0029], Fig. 4.) These "maps" are images of the detected light, including headlights of oncoming vehicles. *See also supra* Claim 24[e].

<u>33[c]</u>: *the one or more changes to characteristics of the first light include a change to at least one of intensity or color or a change of at least one LED of the cluster to a non-emitting state; and*

Claim 33[c] is substantially identical to Claim 25[a] and is thus disclosed by Alden for the reasons as above. *See supra* Claim 25[a].

<u>33[d]</u>: *the cluster includes a plurality of the LEDs and the cluster includes non-contiguous LEDs.*

Claim 33[d] is substantially identical to Claim 25[b] and is thus disclosed by Alden for the reasons above. *See supra* Claim 25[b].

5. Independent Claim 40

<u>40[pre]-40[h]</u>

Claims 40[pre]-40[h] are nearly identical to Claims 24[pre]-24[h]. *See* Appendix A. Therefore, Claims 40[pre]-40[h] are anticipated or rendered obvious by Alden for the reasons above. *See supra* Claims 24[pre]-24[h].

Claim 40[e] additionally requires one or more cameras "positioned to capture an image of at least two other vehicles," which is substantially identical to Claim 32[e] and is thus disclosed by Alden for the reasons above. *See supra* Claim 32[e].

<u>40[i]</u>: *determine a first cluster of the LEDs illuminating at least a first portion of a first other vehicle based at least in part on data from one or more of the sensors indicating a first position associated with the first other vehicle;*

Alden discloses Claim 40[i]. (Papanikolopoulos Decl., ¶95.) Alden discloses selecting ("determining") a first cluster of LEDs that emit light toward an oncoming vehicle, based in part on sensor data indicating the position of that vehicle. *See supra* Claims 24[i]-24[j].

<u>40[j]</u>: *diminish glaring illumination of the first other vehicle by a first change to one or more characteristics of first light of at least the first cluster;*

Alden discloses Claim 40[j]. (Papanikolopoulos Decl., ¶96.) Alden discloses reducing light emitted from selected LEDs, which direct light to sectors determined

to contain another vehicle (*i.e.*, "first light of at least the first cluster"), to dimmed, "low beam" intensity light, so that "the driver of 41 [*i.e.*, the oncoming vehicle] has minimum glare":

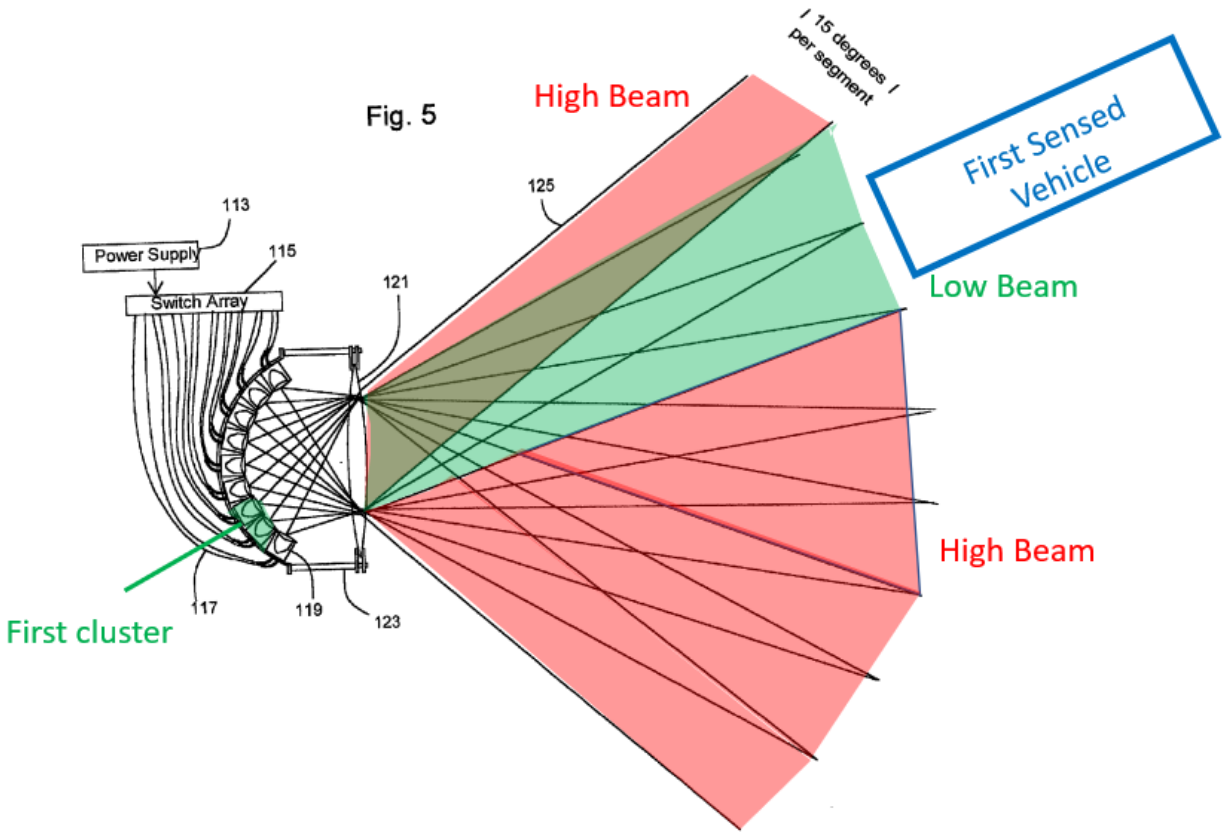

(*Id.*, Fig. 5 (annotated), [0026]-[0029].) *See also supra* Claims 24[g], 40[i].

<u>40[k]</u>: *determine a second, different cluster of the LEDs illuminating at least a second portion of a second other vehicle based at least in part on data indicating a second position associated with the second other vehicle;*

Alden discloses and renders obvious Claim 40[k]. (Papanikolopoulos Decl., ¶97.) Alden's system can "detect the sector ***in which*** [oncoming vehicle] 33 (or ***any*** other ***vehicle***)" is present:

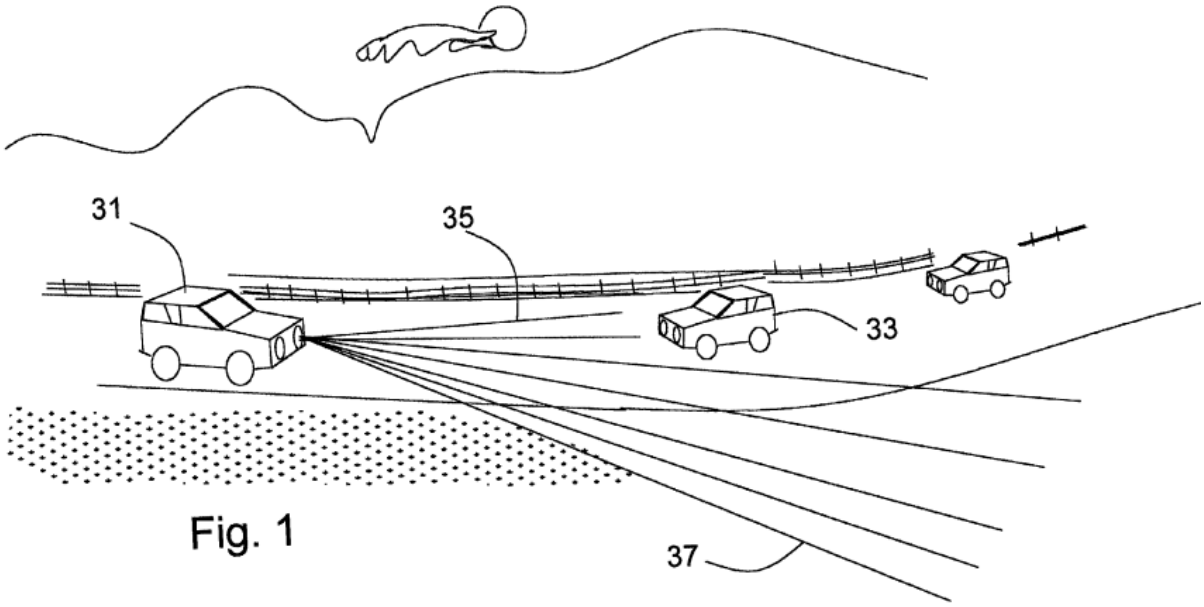

Fig. 1

(Alden, Fig. 1, [2005].) Alden's system provides a "specific means for ***sensing locations of <u>vehicles</u>*** and independent illumination control," and can automatically provide high beams in sectors "where ***no vehicle*** is detected." (*Id.*) Thus, as a POSITA would have understood, if Alden's system detects a second vehicle (*e.g.*, after sensing light from the headlamps of such vehicle), it would determine the vehicle position using its sensor array 51a-51b and CPU 71 and select the cluster of LEDs associated with that position that should be dimmed. *See supra* Claims 24[i]-24[j]. This would result in the selection of a second, different cluster of LEDs associated with the second vehicle's position:

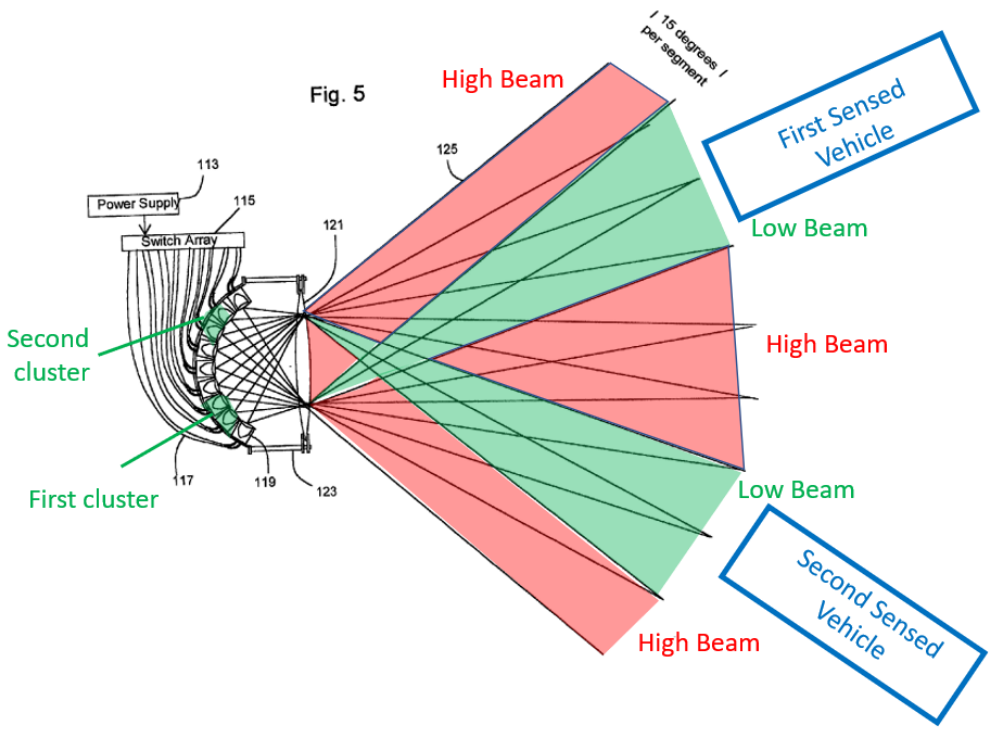

(Alden, Fig. 5 (annotated), [0025], [0027]-[0029]; Papanikolopoulos Decl., ¶97.)

<u>40[l]</u>: *diminish glaring illumination of the second other vehicle by a second change to one or more characteristics of second light of at least the second, different cluster;*

Alden discloses and renders obvious Claim 40[l]. (Papanikolopoulos Decl., ¶98.) Alden discloses diminishing the illumination of LEDs directing light towards sectors of the headlight distribution area where a second vehicle is sensed, by changing an intensity characteristic of the light to be dim, low beam light, so that the driver of that vehicle has "minimum glare." (Alden, [0027]; *see also* [0025]-0026], [0028]-[0029], Figs. 1-3, 5.) *See also supra* Claims 24[k], 40[j].

<u>40[m]</u>: *wherein the first and second changes decrease intensity of first emission from the first cluster and second emission from the second cluster relative to a*

third emission, from the at least one headlamp, illuminating an area between the first and second portion.

Alden discloses Claim 40[m]. (Papanikolopoulos Decl., ¶99.) Alden discloses that changes in characteristics of the light from the first and second clusters directing light to the first and second detected vehicles include a decrease in intensity to dim, low beam light. *See supra* Claims 40[j], 40[l]. Alden also discloses setting the light emitted from the LEDs, which direct light to sectors where no other vehicle is detected (*i.e.,* "a third emission, from the at least one headlamp" which illuminate an area between the first sensed vehicle and the second sensed vehicle) on "high beam" intensity light:

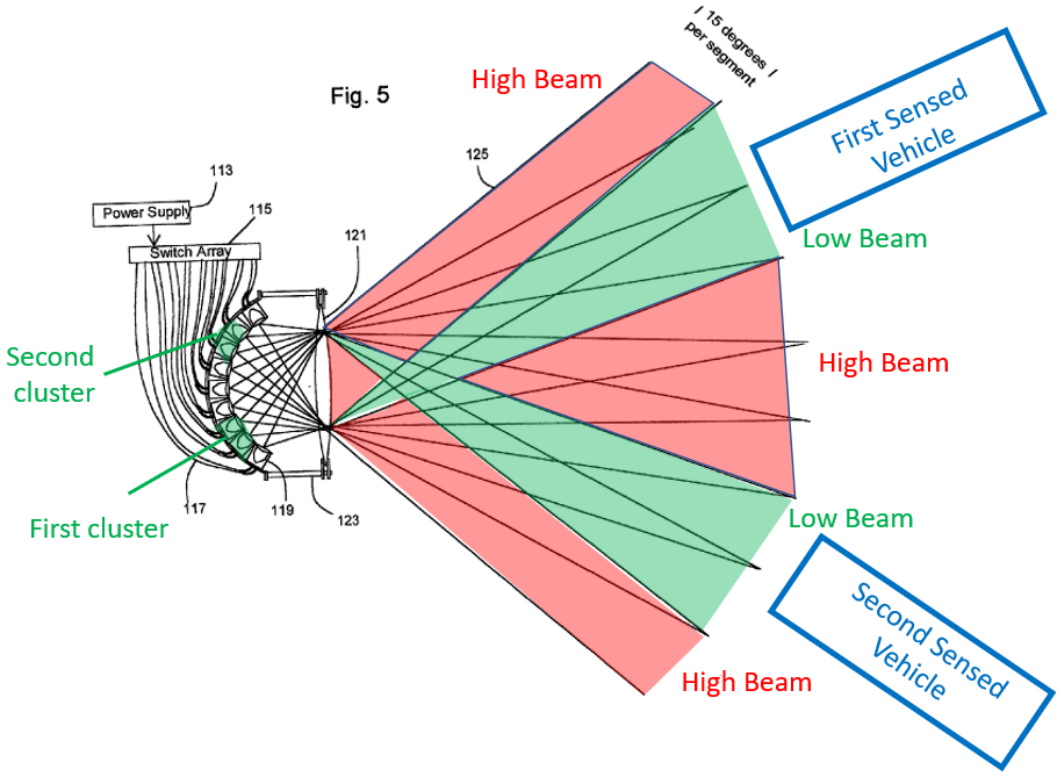

(*Id.*, Fig. 5 (annotated), [0026]-[0029].) As shown in Figure 5 above, the dim, low beam light directed at the first and second vehicles is decreased in intensity relative to the "high beam" intensity light directed to the area in between where no other vehicles are present. (*Id.*; Papanikolopoulos Decl., ¶99.) *See also supra* Claim 24[g], 40[i].

6. Dependent Claim 41

Alden anticipates and renders obvious Claim 41. (Papanikolopoulos Decl., ¶¶100-105.)

41[a]: *The illuminating device of claim 40, wherein: the data includes image data;*

Claim 41[a] is substantially identical to Claim 33[b] and is thus disclosed by Alden for the reasons above. *See supra* Claim 33[b].

41[b]: *at least one of first or second change to characteristics of light associated with at least one of the first or second cluster of LEDs includes at least one of a change to color, to intensity, or a change of at least one LEDs of the respective cluster to a non-emitting state;*

Claim 41[b] is substantially identical to Claim 25[a] and is thus disclosed by Alden for the reasons above. *See supra* Claim 25[a].

41[c]: *at least one of the first cluster or the second cluster includes a plurality of the LEDs and at least one of the first cluster or the second cluster includes non-contiguous LEDs;*

Claim element 41[c] is substantially identical to Claim 25[b] and is thus disclosed by Alden for the reasons above. *See supra* Claim 25[b].

<u>41[d]</u>: *the determination of the first cluster includes selection of the first cluster based at least in part on known aimings of light associated with the first cluster having a correlation to the first position, the known aimings based at least in part on at least one of known directionality of light emitted by the first cluster or known directionality of light emitted by the first cluster exiting the headlamp; and*

Claim 41[d] is substantially identical to Claim 33[a] and is thus disclosed by Alden for the reasons above. *See supra* Claim 33[a].

<u>41[e]</u>: *the determination of the second cluster includes selection of the second cluster based at least in part on known aimings of light associated with the second cluster having a correlation to the second position, the known aimings based at least in part on at least one of known directionality of light emitted by the second cluster or known directionality of light emitted by the second cluster exiting the headlamp.*

Alden discloses and renders obvious Claim 41[e]. (Papanikolopoulos Decl., ¶105.) Claim 41[e] is substantially identical to Claim 41[d], except that is directed to the "second cluster" that would be used vis-a-vis a second detected vehicle. As discussed, Alden's system can detect multiple vehicles and works the same way when detecting and adjusting illumination in the area of a "second vehicle." *See supra* Claims 40[k]-40[l]. Again, Alden's lighting elements 119 are "on a curve along the focal point of a headlight lens 121 such that ***the light*** from each lighting element ***goes into a specified portion (or portions)*** of the headlight distribution area" ahead of the vehicle:

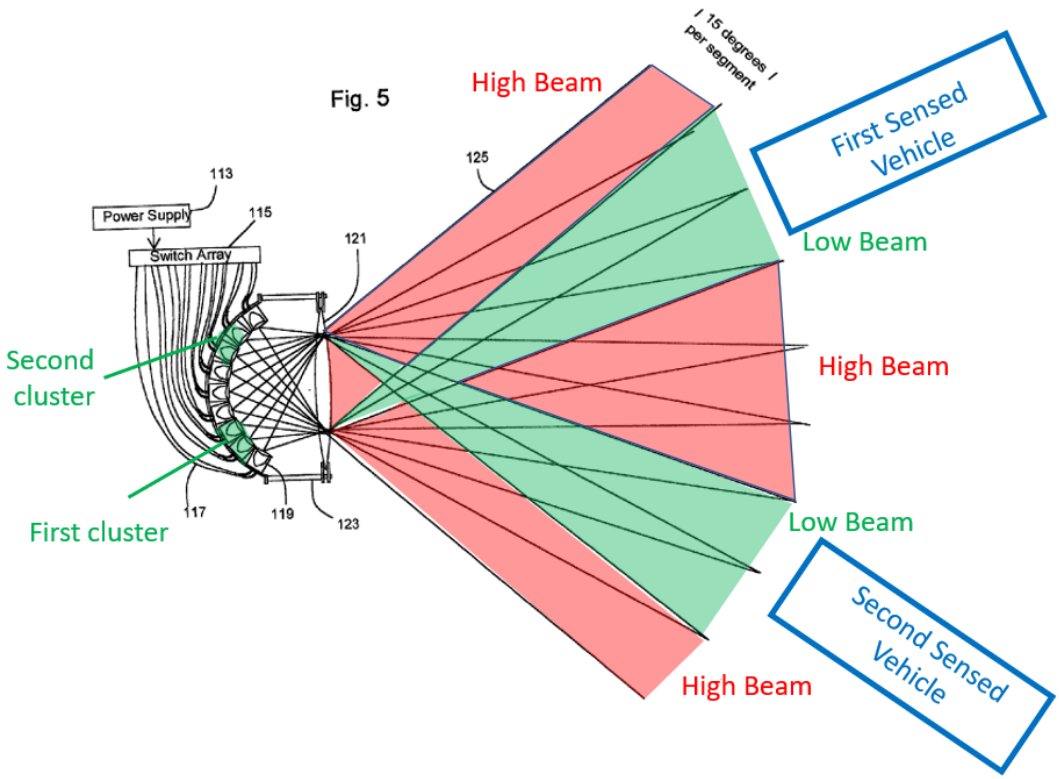

(Alden, [0029], Fig. 5 (annotated).) Thus, when Alden illuminates an area (such as one with a "second vehicle") with low beam light, it will select and adjust those LEDs that are directing light into that corresponding area where the second vehicle is. (Papanikolopoulos Decl., ¶105.) See also supra Claims 24[j], 33[a], 40[l].

7. Dependent Claims 26/34/42

Alden anticipates and renders obvious Claims 26/34/42. (Papanikolopoulos Decl., ¶¶106-111.)

<u>[26/34/42]a</u>: ***The illuminating device of claim [24/32/40], wherein the memory further stores instructions that when executed by one or more processors of the controller, enable the controller to:***

Alden discloses Claim [26/34/42]a. *See supra* Claim 24[h].

<u>[26/34/42]b</u>: ***identify an upcoming road curvature along a road on which the motor vehicle is traveling; and***

Alden discloses Claim [26/34/42]b. (Papanikolopoulos Decl., ¶¶108-110.) Alden discloses that its segmented headlight system can be used to "***<u>concentrate light to look around corners</u>*** in response to road conditions":

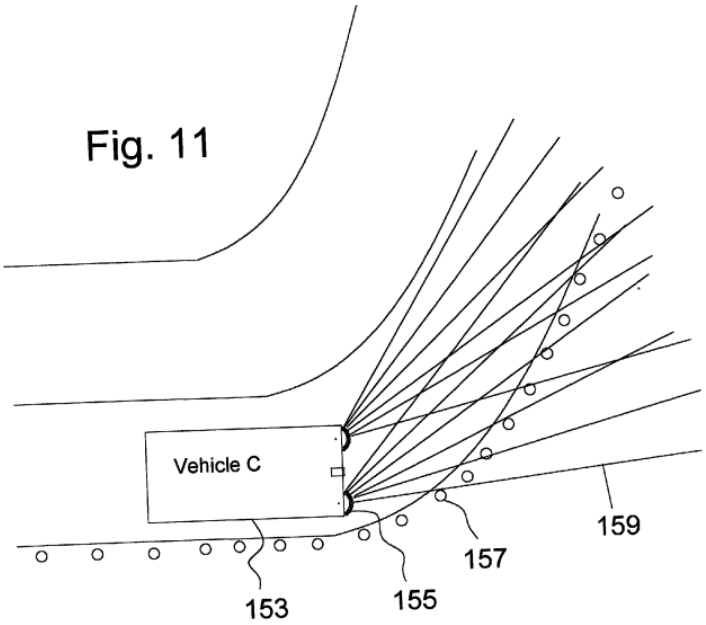

(Alden, [0036], Fig. 11.) Alden discloses that a vehicle with the "segmented sensing elements and segmented light distribution elements described herein" can "***sense[] that the road turns*** by receiving light from reflectors such as a reflector 157." (*Id.*, [0036].) That is, Alden identifies an upcoming road curve by sensing the location and position of reflectors positioned along the curve. (*Id.*) Alden's "sensing elements" include left and right sensors to detect such light and a CPU to process this data and instruct the control circuitry and LEDs accordingly. (Alden, Figs. 3-5, [0027]-[0029].) This data is used by the CPU and control circuitry to adjust the LEDs

in the "responding headlights 155" (such as, for example, those LEDs shown in Alden Figure 5 pointed in the direction of the reflectors), so they "direct light into the corner to maximize the driver's ability to see there." (*Id.*, [0036], [0026]-[0029]; Papanikolopoulos Decl., ¶109.) *See also supra* Claim 24[c], 24[g].

Additionally, Alden discloses that its system can include a steering wheel "rotation sensor" that detects when the vehicle is planning to turn. (Alden, [0039]-[0040], Figs. 14-15.) As the steering wheel "rotates 'x' degrees," the system calculates the new planned direction of the vehicle and "changes the direction of the headlight output 197 a corresponding 'f(x)' degrees." (*Id.*) Thus, when a driver turns her steering wheel before moving, in anticipation of an upcoming turn, Alden's system "increases illumination illuminating the turn." (Papanikolopoulos Decl., ¶110.)

[26/34/42]c: *accommodate the upcoming road curvature by adaptation of a light pattern of at least one of the at least one headlamps.*

Alden discloses Claim [26/34/42]c. (Papanikolopoulos Decl., ¶111.) Again, Alden discloses that its segmented headlight system can be used to "***concentrate light to look around corners*** in response to road conditions":

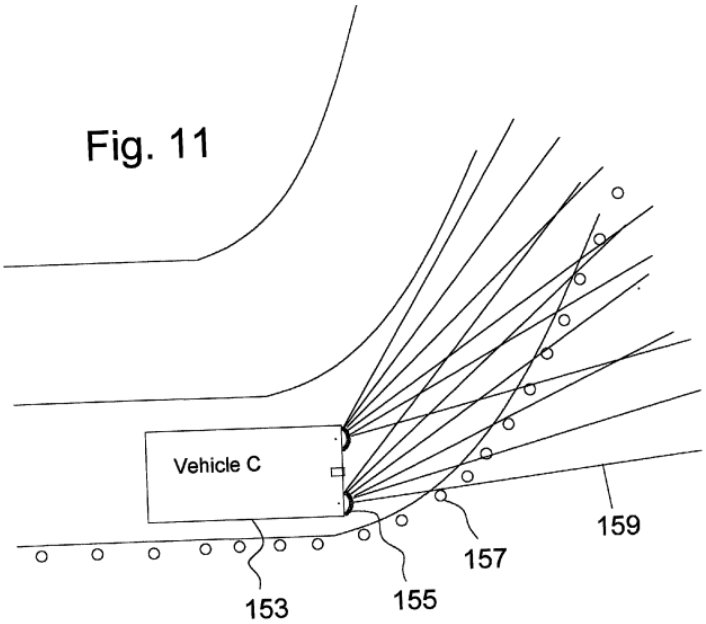

(Alden, [0036], Fig. 11.) Alden does this by adapting the light pattern of the headlights to "direct light into the corner to maximize the driver's ability to see there." (*Id.*, [0036], [0026]-[0029]; Papanikolopoulos Decl., ¶111.) Alden further discloses that "directing of light can be achieved with the segmented sensing elements and segmented light distribution elements described therein." (*Id.*, [0036], [0026]-[0029].) This includes determining a control strategy to adapt the lighting elements' outputs, such that high intensity light is directed to segments intended to illuminate the turn. (*Id.*, [0027]-[0029], [0036]; *see also* [0039]-[0040] (discussing controlling direction of the headlight beam based on sensing steering wheel angle.) *See also supra* 24[g]. By directing light into the corner, or curve of the road, to maximize the driver's ability to see there, the system is increasing illumination in the direction of the curve. (Papanikolopoulos Decl., ¶111.) This directing of light

into the corner, as shown in Figure 11 above, is an adaption of the light pattern of the headlamps. (*Id.*)

8. Dependent Claims 27/35/43

Alden anticipates and renders obvious Claims 27/35/43. (*Id.*, ¶112.) Claims 27, 35, 43 are substantially identical to Claims 25, 33, 41, respectively, except that each additionally recites "the memory further stores instructions that, when executed by one or more processors of the controller, enable the controller to accommodate the road curvature by changing illumination in at least a direction of the road curvature by adaptation of light pattern in at least one of color, intensity or spatial distribution by modification of light associated with one or more of the LEDs." *See* Appendix B. Thus, the claims are anticipated and rendered obvious by Alden for the reasons given above for the common elements. *See supra* Claims 25, 33, 41. Moreover, Alden discloses the additional limitation, as detailed below:

<u>27c/35c/43e</u>: *the memory further stores instructions that, when executed by one or more processors of the controller, enable the controller to accommodate the road curvature by changing illumination in at least a direction of the road curvature by adaptation of light pattern in at least one of color, intensity or spatial distribution by modification of light associated with one or more of the LEDs.*

Alden discloses Claim 27c/35c/43e. (Papanikolopoulos Decl., ¶113.) Alden's system, including the processor executing stored instructions, accommodates road curvature by adapting the light pattern in intensity to "***<u>concentrate</u> light to look around corners*** in response to road conditions":

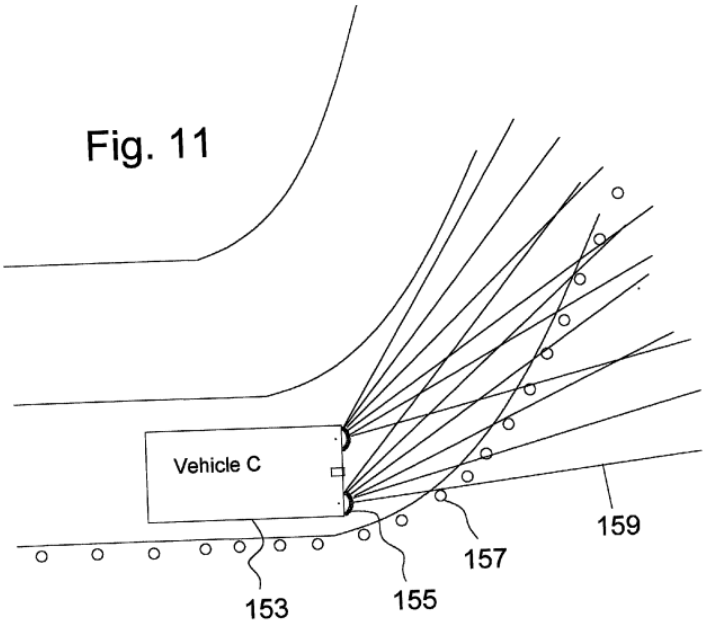

(Alden, [0036], Fig. 11.) Alden does this by adapting the light pattern of the headlights to "direct light into the corner to maximize the driver's ability to see there." (*Id.*, [0036], [0026]-[0029], Fig. 11 *see also* [0039]-[0040] (discussing controlling direction of the headlight beam based on sensing steering wheel angle). *See also supra* Claims 26/34/42.

9. Dependent Claims 29/37/45

The illuminating device of claim [26/34/42], wherein the identification of the upcoming road curvature is based at least in part on sensor data provided by one or more of the sensors of the vehicle and wherein the adaptation of the light pattern is based at least in part on the sensor data.

Alden anticipates and renders obvious Claim 29/37/45. (Papanikolopoulos Decl., ¶¶114-115.) *See supra* Claims 26/34/42. As discussed, Alden's system can sense when a road curves in front of a vehicle based on sensor data detecting road reflectors 157. (Alden, [0036], Fig. 11.) Alden further discloses adapting headlights'

emitted light pattern based on the sensor data to increase illumination of the turn, by directing light "into the corner to maximize the driver's ability to see there." (*Id.*)

Additionally, Alden's system can include a steering wheel "rotation sensor" that can further detect when a vehicle is approaching an upcoming road curve. (Alden, [0039]-[0040], Figs. 14-15.) As the steering wheel "rotates 'x' degrees," the system calculates the new planned direction of the vehicle and "changes the direction of the headlight output 197 a corresponding 'f(x)' degrees." (*Id.*) Thus, when a driver turns her steering wheel before moving, in anticipation of an upcoming curve, Alden's system adapts the light pattern to illuminate the curve. (Papanikolopoulos Decl., ¶115.)

10. Dependent Claims 30/38/46 and 31/39/47

[30/38/46]: *The illuminating device of claim [24/32/40], further including one or more optical control elements to control light emitted from one or more of the LEDs.*

[31/39/47]: *The illuminating device of claim [30/38/46], wherein the optical control elements include at least one of one or more reflectors, refractors or lenses.*

Alden anticipates and renders obvious Claim [30/38/46] and Claim [31/39/47]. (Papanikolopoulos Decl., ¶116-119.) As shown in Figure 5 (below), each headlamp comprises of an array of lighting elements, *e.g.*, LEDs. (Alden, [0029], Fig. 5.) Again, these lighting elements "are on a curve along the focal point of ***a headlight lens 121*** such that the light from each lighting element goes into a specified portion (or portions) of the headlight distribution area." (*Id.*, [0029].) Thus,

Alden discloses the illuminating device further includes an "optical control element" to control light emitted from one or more of the LEDs, such as the headlight "lens 121."

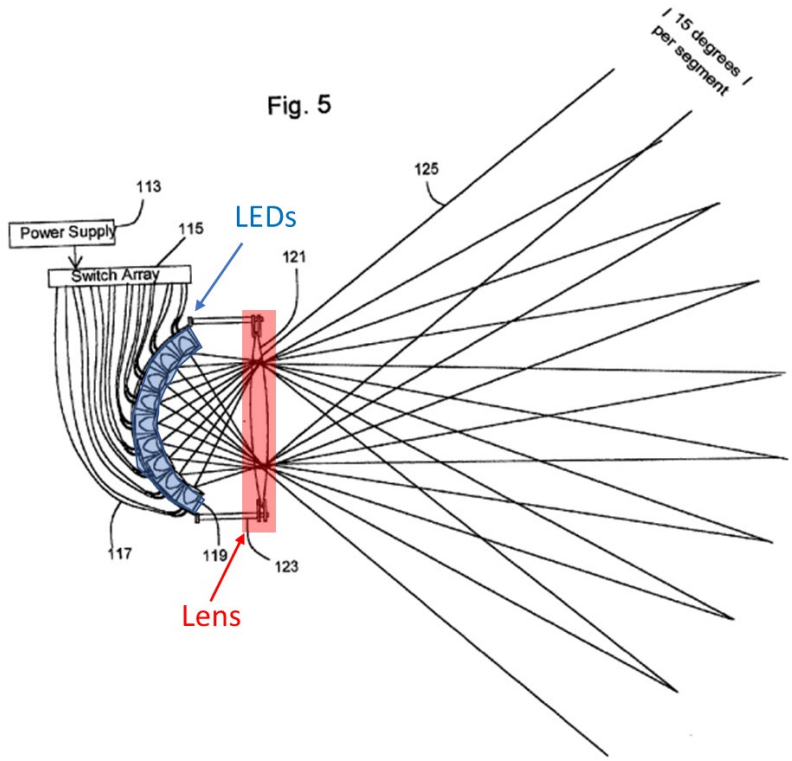

(*Id.*, Fig. 5 (annotated).)

In addition, Alden's system can include other "optical control elements," including a "variable refractive element" such as a liquid crystal. (*Id.*, [0033]-[0035], [0061], Figs. 8-10.) This refractor "enables light from an individual headlight distribution sector to be redirected in response to sensed environmental conditions when used in conjunction with the elements and processes previously discussed herein." (*Id.*)

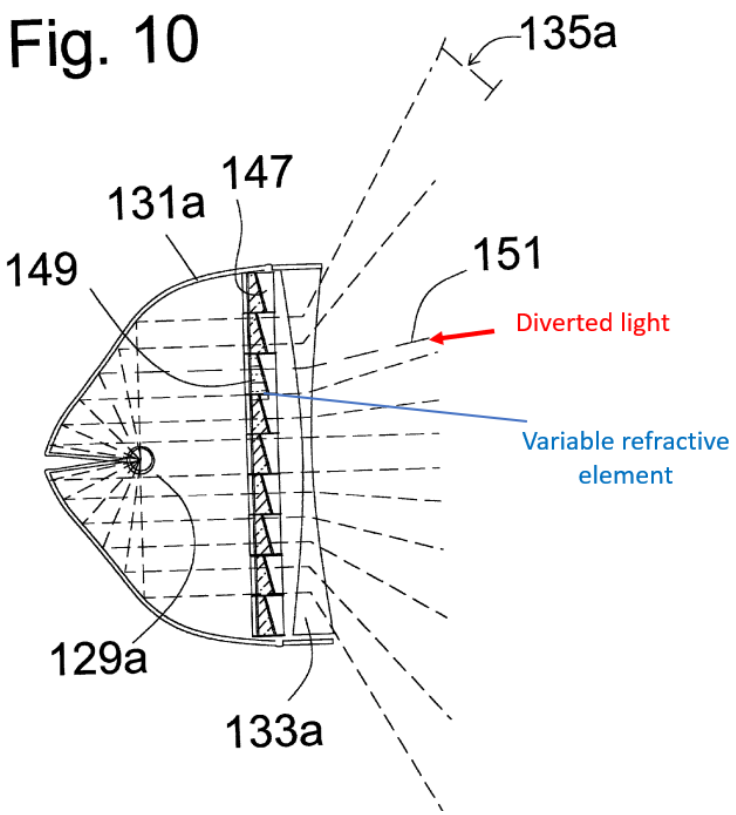

(*Id.*, Fig. 10 (annotated).)

Alden discloses its use of refractive elements to "bend" light can be included in its headlights, such as that of Figure 5, and a POSITA would have readily understood how to implement the variable refractive elements in such system. (*Id.*, ¶119.) In fact, Alden expressly discloses that "[o]ne or more methods employed herein ***may be used in combination*** to vary illumination ***in a segmented system***." (Alden, [0061This would have been use of a known optical element (liquid crystal) in a system having different light distribution sectors that Alden describes the liquid crystal as acting upon. (Papanikolopoulos Decl., ¶119.) And a POSITA would have been motivated to add this refractor to the system in Figure 5, so as to

provide multiple means of modifying direction or intensity of individual lighting sectors, including bending the light output in certain desired portions, allowing more variable control of lighting of subsections of a headlight beam. (*Id.*)

B. <u>Ground 2</u> – Alden in View of Kobayashi Renders Obvious Claims 28, 36, 44

The illuminating device of claim [26/34/42], wherein identification of the upcoming road curvature is based at least in part on map data and wherein the adaptation of the light pattern is based at least in part on the map data.

Alden in view of US6,049,749 ("**Kobayashi**")[8] (EX1006) renders obvious Claim 28/36/44. (Papanikolopoulos Decl., ¶¶120-123.) Kobayashi is titled "Lighting device for a vehicle" and is directed to adaptive vehicle headlamp systems. (Kobayashi, Abstract, 1:5-8.) Like Alden, Kobayashi's headlamp system includes various inputs, a controller, and a headlamp:

[8] Kobayashi issued on April 11, 2000, and is prior art under §102(b).

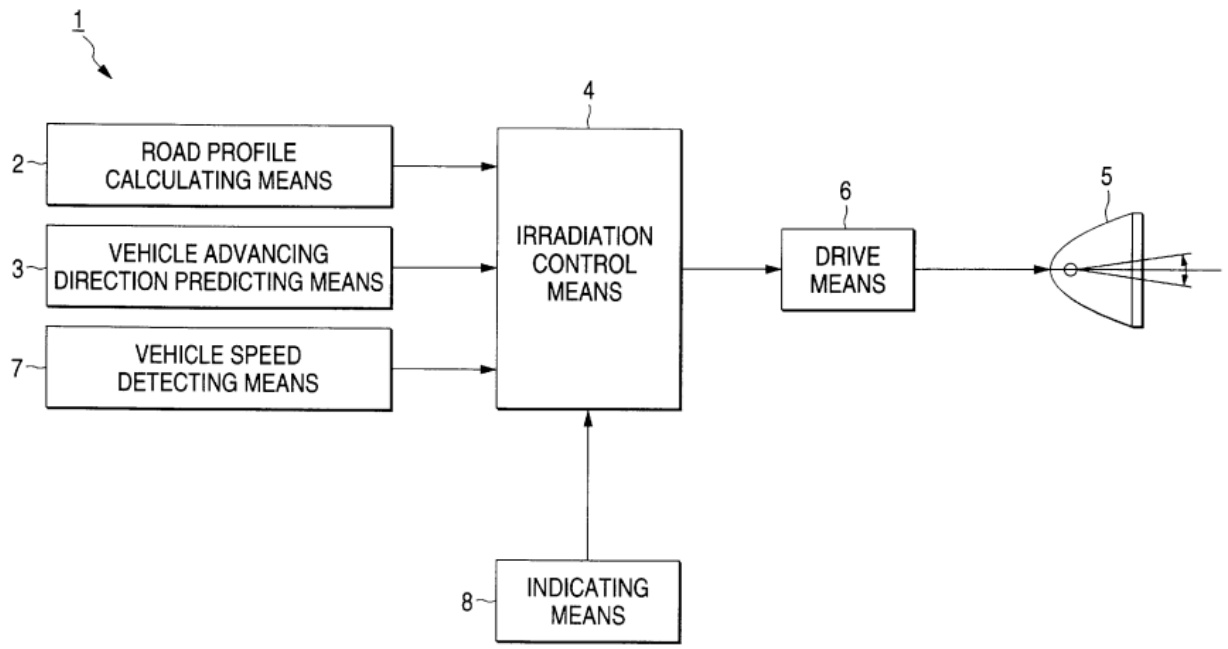

(Kobayashi, Fig. 1, 3:9-5:28; *see also* Fig. 12, 17:3-67.) Specifically, Kobayashi's controller ("irradiation control means 4") receives "road map information" from "road profile calculating means 2," along with other sensor data, and use these inputs to automatically adjust the illumination of headlamp 5. (*Id.*; *see also* 2:4-39.) The "road profile calculating means" can also be included as part of a GPS sensor that outputs "map information." (*Id.*, Fig. 12, 17:3-47, 2:28-50.) Kobayashi further discloses that as a vehicle moves along the road, the "irradiation control means 4" can "conduct[] irradiation control of the lighting device in accordance with the road profile," so that "when the vehicle turns to left, the left shoulder is irradiated," and "[w]hen the vehicle turns to right, the right shoulder is irradiated":

FIG. 10

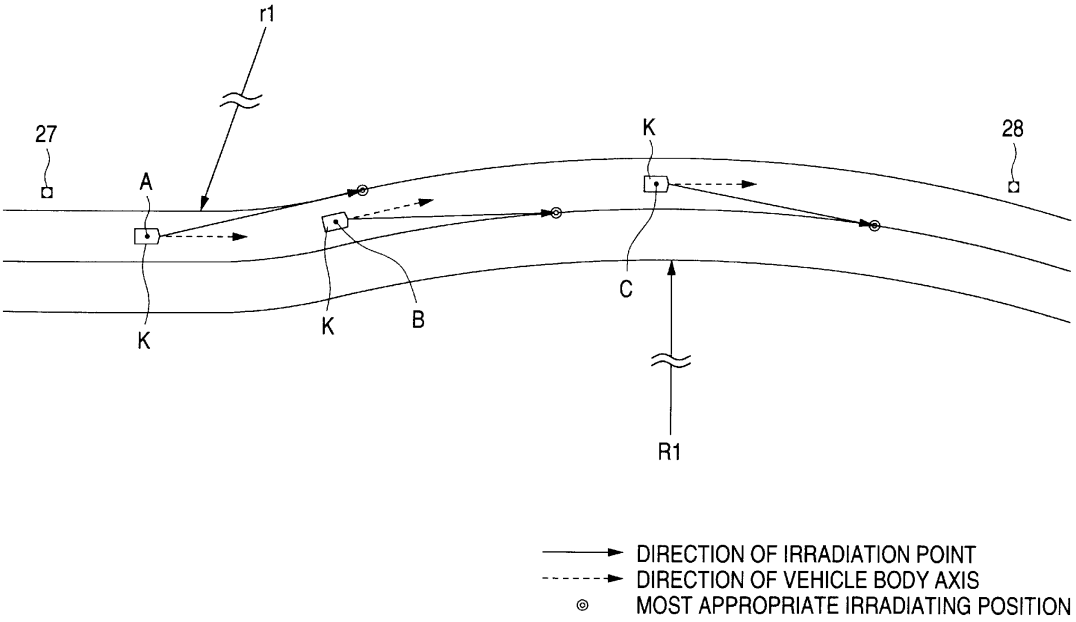

(*Id.*, Fig. 10, 4:5-13, 15:6-28, 17:41-67; *see also* Fig. 9, 11:34-14:52.)

It would have been obvious to a POSITA to apply these teachings to Alden to use map data to identify road curvature when adapting the LEDs of Alden to "direct light into the corner." (Papanikolopoulos Decl., ¶122.) Both Alden and Kobayashi are directed to vehicle headlamp systems, both can re-direct light based on detected upcoming road curves, and both can use data from various sensors to do so. (*Id.*) Alden discloses road curves and adjusting light using numerous means, including light sensors and reflectors and wheel sensors, and Kobayashi simply discloses an additional known means to detect road curvature: map data. (*Id.*) A POSITA would have considered the systems to be complementary, and would have had a reasonable expectation of success, as Alden's controller can already synthesize multiple sources

of information (*e.g.*, roadside reflectors, steering sensors, oncoming vehicles) and the map data of Kobayashi could be similarly synthesized. (*Id.*)

Further, a POSITA would have been motivated to combine the teachings of Alden and Kobayashi. (*Id.*, ¶123.) Alden details how an LED lighting system can be configured to alter a light based on detected road curvature, including using light sensors and reflectors and wheel sensors. (Alden, Fig. 11, [0036], Fig. 14, [0039].) Kobayashi makes clear that map data can be included as an additional approach in controlling direction of vehicle headlights. (Kobayashi, Fig. 1, 2:4-50, 3:9-50, Fig. 12, 17:3-47, Fig. 10, 15:6-28, Fig. 9, 11:34-14:52.) A POSITA would have thus been motivated to combine the techniques of detecting a road curvature to maximize successful detection in different environments. (Papanikolopoulos Decl., ¶123.) For example, where a road lacks the reflectors, relying on map data would be preferred. (*Id.*) And in an urban environment, where map data may be less reliable, light or steering wheel sensors may be preferred. (*Id.*)

C. <u>Ground 3</u> – Alden in View of Kondo Renders Obvious Claims 8, 10-14

1. Independent Claim 8

Alden in view of US20020057572 ("**Kondo**")[9] (EX1007) renders obvious Claim 8. (Papanikolopoulos Decl., ¶¶124-153.)

[9] Kondo published on May 16, 2002, and is prior art under §102(a).

<u>8[pre]</u>: ***An illuminating device which provides light to meet an illumination requirement of an illuminated area in which visual activities are performed, where different sub-areas of the illuminated area need to be illuminated at a different intensity and/or at a different spectrum than another sub-area of the illuminated area, comprising:***

Alden discloses Claim 8[pre] to the extent limiting. (Papanikolopoulos Decl., ¶125.) Alden recognizes that in an illuminated area, such as a vehicle's field-of-view, different sectors ("sub-areas") have different illumination requirements; for example, areas with no oncoming vehicle should have "maximum light" while areas with a "driver of an oncoming vehicle" should have "minimum glare." (Alden, Abstract, [0005], [0029].) Alden thus discloses an "automatic segmented illumination" headlight system ("illuminating device") that can emit different illumination in different sectors in its field-of-view, such as "low beam illumination 35 in a first headlight distribution sector while concurrently emitting a high beam, illumination 37 in a second headlight distribution sector":

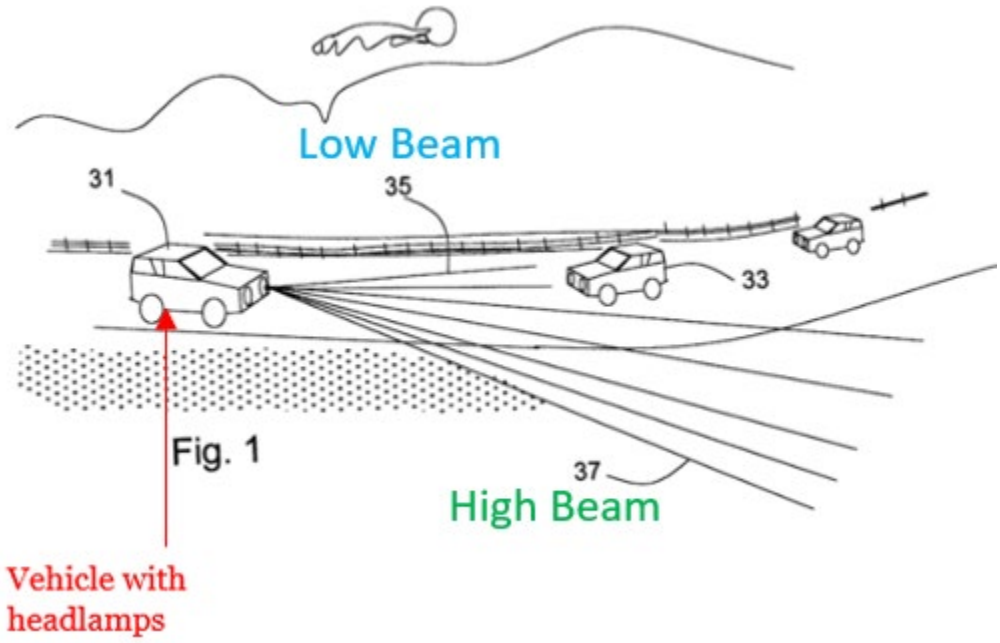

(Alden, [0025], Fig. 1 (annotated); *see also* [0026], [0029].) *See also supra* Claim 24[pre].

<u>8[a]</u>: ***a light fixture including a multiplicity of directional light sources including at least two directional light sources pointing in different directions thereby illuminating different sub-areas of the illuminated area,***

Alden discloses Claim 8[a]. (Papanikolopoulos Decl., ¶126.) Alden's system includes a "light fixture" in the form of "segmented beam headlight" (61) mounted in a vehicle:

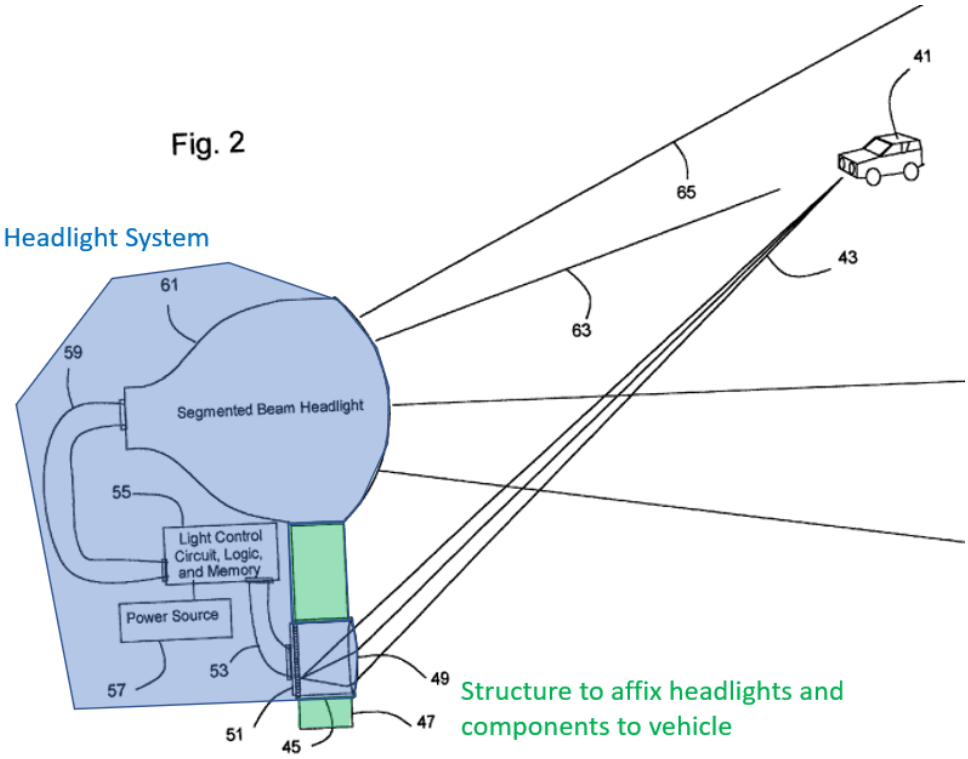

(Alden, [0026], Fig. 2 (annotated).) Each "segmented beam headlamp" has "a multiplicity of directional light sources including at least two directional light sources pointing in different directions," as each includes an "array" of "white LEDs" or "alternate light mechanisms" "on a curve along the focal point of a headlight lens 121, such that the light from each lighting element (or group thereof) goes into ***a specified portion (or portions) of the headlight distribution area***":

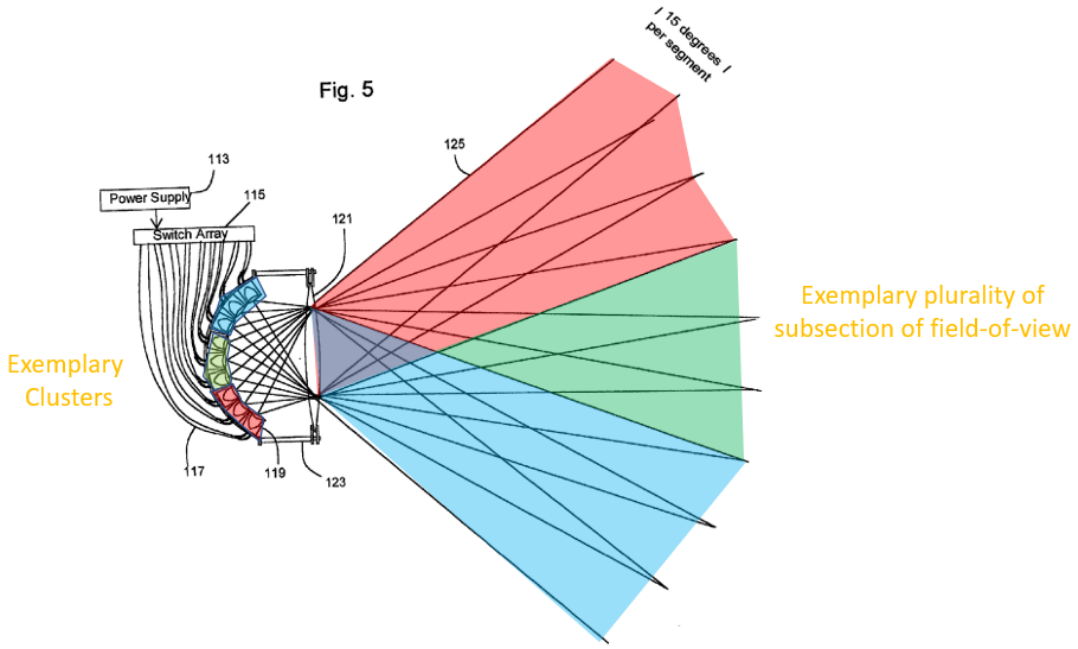

(*Id.*, Fig. 5 (annotated), [0029].) *See also supra* Claims 24[b], 24[j].

<u>8[b]</u>: *the light fixture having movable structure for aiming the directional light sources mounted thereon in a defined direction;*

Alden is directed to a headlight system mounted on a vehicle, with LEDs in the headlamps aimed in various directions. *See supra* Claim 8[a]. Alden discloses this vehicle move to aim the directional light sources in different directions. (Alden, Fig. 1, [0005], [0025].) Alden's system can further re-direct light around corners and up and down hills, and it can use mechanisms (including a lens and a variable refractor) to redirect light. (*Id.*, Figs. 5, [0029], Figs. 10-15, [0035]-[0040].)

Further, Alden in view of Kondo renders obvious Claim 8[b]. (Papanikolopoulos Decl., ¶¶128-132.) Kondo is titled "Automatic Optical-Axis

Adjusting Device for Automatically Adjusting Directions of Optical Axes of from Lights," and like Alden, is directed to vehicle headlamp systems that adjust the direction of "the front lights with respect to a turning direction or traveling direction of the vehicle to improve visibility to a driver." (Kondo, Abstract, [0005], [0008].) Kondo discloses vehicle front lights comprised of swivel lights 11L-11R and left and right headlights 10L-10R, as. (Kondo, [0016].)

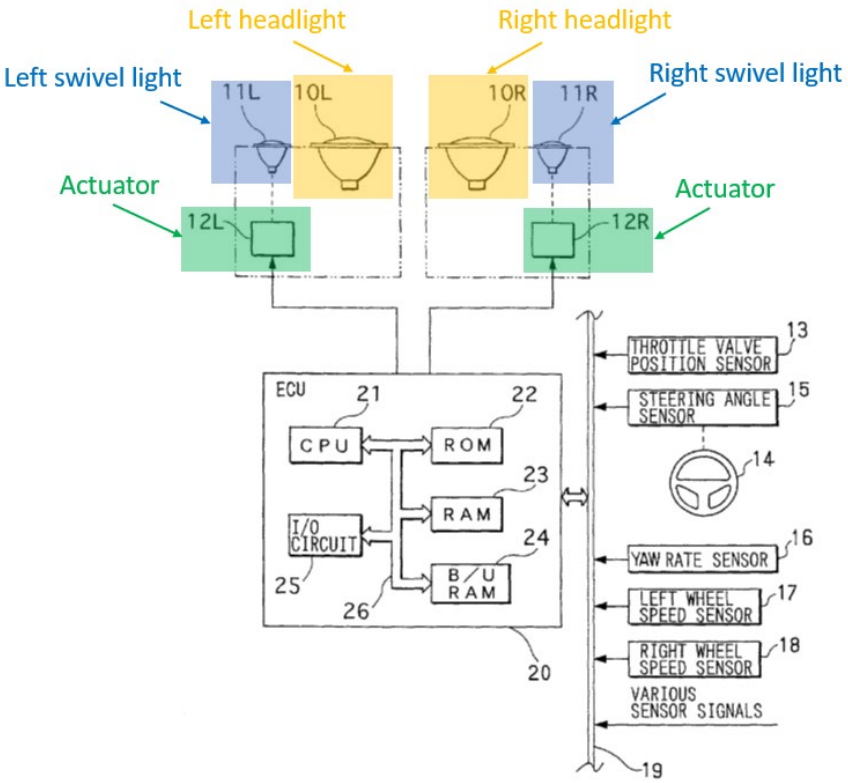

(*Id.*, Fig. 1, [0016].) The optical axes of swivel lights 11L-11R "can be ***turned*** horizontally in a left or right direction separately from or ***integrally with*** optical axes of the headlight 10L, 10R ***through a swivel control***." (*Id.*) For example,

Kondo discloses "illuminating zones of the swivel lights 11L-11R can be adjusted within its swivel control range," as shown in Figure 2:

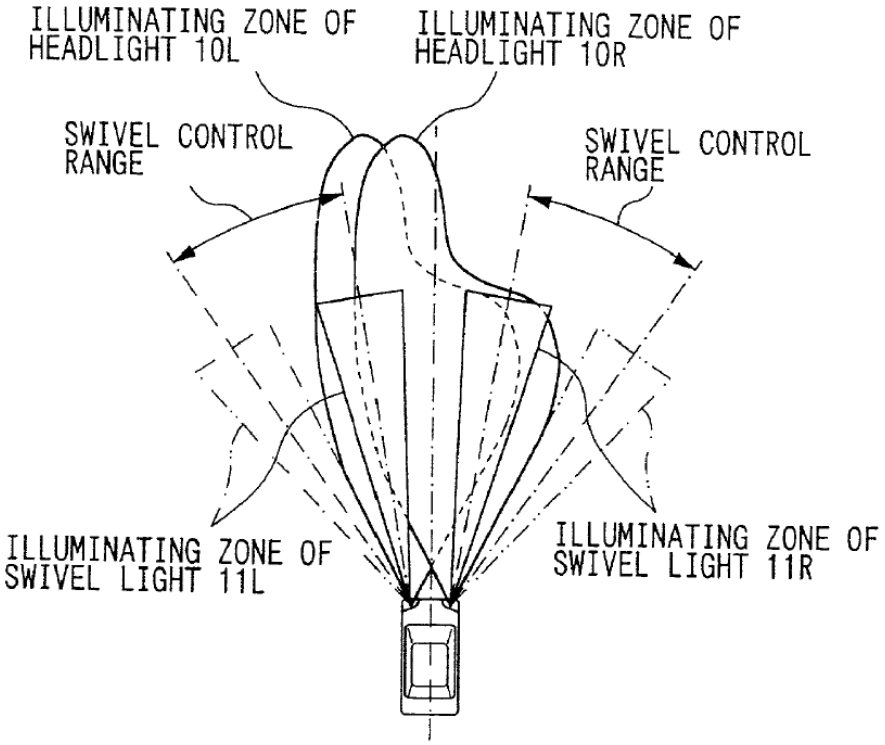

(*Id.*, Fig. 2, [0018].)

Kondo's device also includes actuators 12L-12R, driven to adjust the directions of the optical axes of swivel lights 11L-11R, based on the swivel control angle computed by ECU 20. (*Id.*, [0030]-[0031]; *see also* Fig. 1, [0016]-[0018].) Kondo further discloses this angle is determined at least partly based on turning radius of the vehicle. (*Id.*, [0030], Fig. 3.) Thus, directions of the optical axes of the front lights can be adjusted "with respect to a turning direction or travelling direction of the vehicle to improve visibility of a driver." (*Id.*, [0005]-[0008].) In sum, Kondo discloses a headlight fixture (*i.e.*, swivel light) having a "movable

structure" (*i.e.*, swivel structure) for "aiming the directional light sources in a defined direction." (Papanikolopoulos Decl., ¶129; *see also* Kondo, Fig. 3, [0020]-[0025], Fig. 4, [0027]-[0032].)

It would have been obvious to include LEDs of Alden on a moveable structure as taught by Kondo. (Papanikolopoulos Decl., ¶130.) Alden and Kondo are both directed vehicle headlight systems, both disclose adjusting headlight directionality using a controller taking into account various sensor data, and both disclose focusing light in the direction of a curve or turn to improve driver visibility. (*Id.*) Alden also already contemplates directionality of light from its headlamps can be adjusted in numerous ways, including via a lens and a variable refractive element, and Kondo simply provides a known alternative for re-directing such light. (*Id.*)

Further, a POSITA would have had a reasonable expectation of success in using the swivel structure (and associated actuator) taught by Kondo to mount certain LEDs in Alden's system. (*Id.*, ¶131.) For example, LEDs in Alden (such as in Figure 5) could be mounted to the moveable structure and controlled using the same controller (Alden's CPU 71) that is already assessing how and in what directions to project light—something that Kondo similarly uses a CPU to assess. (*Id.*)

A POSITA would have been motivated to mount LEDs of Alden on the swivel structure of Kondo. (*Id.*, ¶132.) Again, Alden discloses its system can be used to "direct light into the corner to maximize light there." (Alden, Fig. 11, [0036].) Kondo provides a specific solution for this; it can accommodate sharp turns by using a swivel structure to adjust the physical direction of lights. (*Id.*, ¶132.) Using such a structure in Alden would have given greater flexibility in controlling the directionality of emitted beams. (*Id.*) By adding the swivel structure, the headlights could be made to sweep across a greater range in front of the vehicle than by using the fixed lighting elements and optical members disclosed in Alden. (*Id.*)

8[c]: *a camera for obtaining images of the illuminated area functioning as a detector for at least one of (i) a light detector (ii) a spectrum detector, (iii) a motion detector, (iv) a measuring detector for sensing a geometry of the illuminated area, and (v) a detector for sensing at least one of work surfaces and road objects and at least one of vehicles and people;*

Alden discloses Claim 8[c]. (Papanikolopoulos Decl., ¶¶133-136.) Alden discloses a "camera" for obtaining images of the illuminated area. *See supra* Claim 24[e], 32[e]. Specifically, Alden's system includes a lens along with photodiodes arrays or CCD detectors, which detect and image lights of oncoming vehicles of other drivers. (Alden, [0026]-0028], Figs. 2-3.) It can also detect and image roadside objects such as reflectors. (Alden, [0036], Fig. 11.) Thus, this camera

functions as a "light detector" and a "detector" for sensing road objects, vehicles, and people, among other things. (Papanikolopoulos Decl., ¶133.)

<u>8[d]</u>: *a controller for adjusting a light intensity and a direction of each of the directional light sources;*

Alden's system includes "light control circuit, logic, and memory 55" for controlling its headlamp light sources:

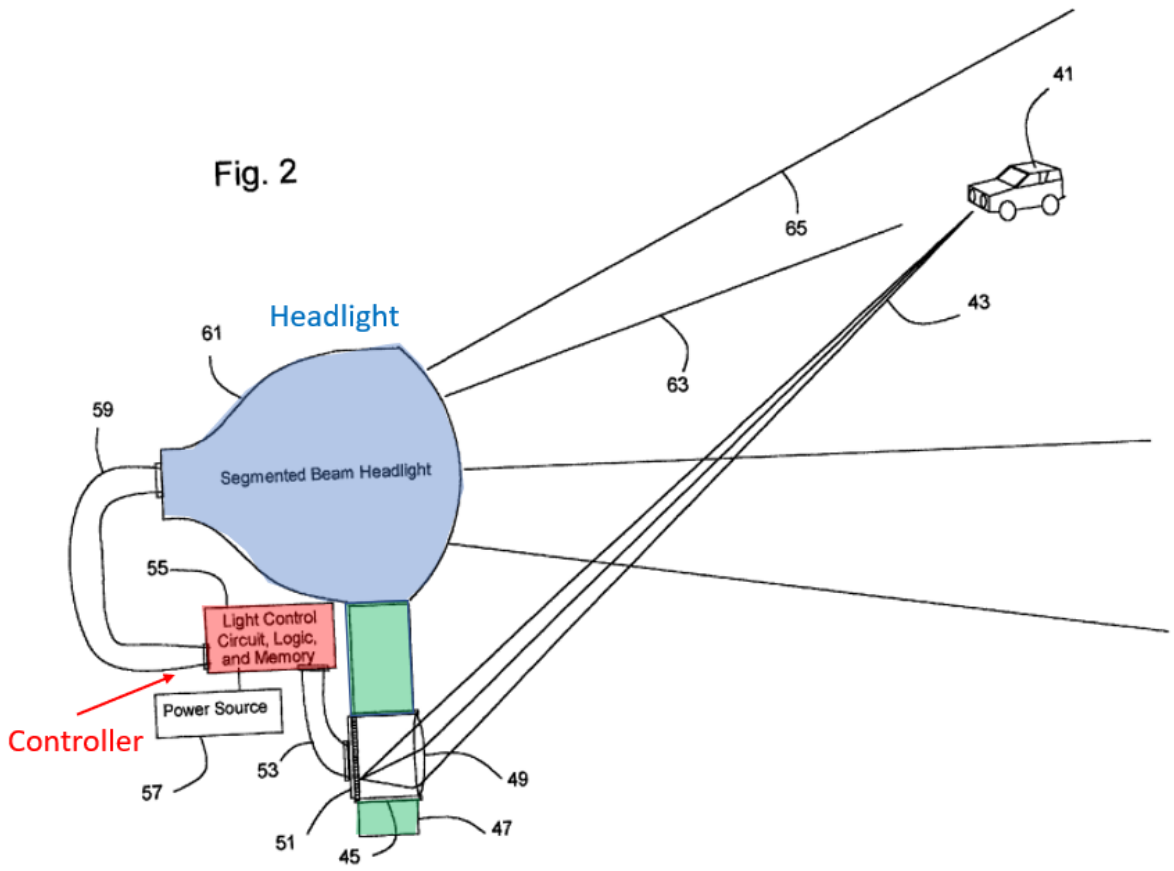

(Alden, Fig. 2 (annotated), [0026].) This includes a CPU and left and right light control circuits. *See supra* Claim 24[f], 24[c]. Further, the CPU and left and right control circuits can adjust the intensity of light (*e.g.*, switching some LEDs to dim and others to high), as well as its direction (*e.g.*, based on combining different

groups of LEDs). *See supra* Claims 24[g], 24[k]. (Papanikolopoulos Decl., ¶137; Alden, Figs. 10, [0033-0036] (discussing refractive element), Figs. 11-15, [0037]-[0040] (discussing system project light around curves and up and down hills).)

Further, Alden in view of Kondo renders obvious Claim 8[d]. (Papanikolopoulos Decl., ¶¶138-139.) Kondo discloses a lighting device that can adjust the direction of swivel lights via a corresponding actuator, based on a swivel control angle computed by the ECU 20. (Kondo, [0008]-[0009], [0030]-[0031], Figs. 3-4.) *See also supra* Claim 8[b]. Kondo discloses the ECU 20 "is formed as a logical operation circuit that includes a CPU 21, a ROM 22, a RAM 23...," "[t]he CPU 21... carries out various known arithmetic operations," and "[t]he ROM 22 stores control programs." (*Id.*, [0016].) Further, ECU 20 receives sensor signals and generates output signals based on sensor data, and the output signals are sent to actuators of the swivel lights so as to adjust the direction of each swivel light. (*Id.*, [0017]; *see also* [0030].)

It would have been obvious to combine Alden and Kondo for the reasons discussed above. *See supra* Claim 8[b]. (Papanikolopoulos Decl., ¶139.) Alden's system discloses re-directing light around a curve or turn, Kondo provides a known solution for accomplishing this, and a POSITA would have had a reasonable expectation of success and would have been motivated to mount LEDs of Alden on a swivel structure as taught by Kondo (*e.g.*, for greater flexibility in light

projection). *See supra* Claim 8[b]. Further, a POSITA would have understood that once the swivel structure is included in Alden's system, and LEDs are mounted thereon, there would need to be a mechanism ("controller") to control its swivel. (Papanikolopoulos Decl., ¶139.) A POSITA would have understood that the swivel structure in Kondo could be controlled in the same way when used in Alden—for example, through the use of a processor (CPU 71) that can take into account sensor data and instruct actuators to swivel the lights accordingly. (*Id.*)

8[e]: [1] ***a processor with stored algorithms and data for identifying at least one of (i) tasks being carried out by people, (ii) location of people, (iii) frequency of area usage by people, (iv) traffic density in the illuminated area from the sensed geometry, (v) work surfaces, (vi) road objects, people and/or vehicles, and (vii) roadway surface luminance*** **[2]** ***any of which is used by said processor for determining illumination within the illuminated area using at least one of artificial intelligence, pattern recognition, video analytics, and look-up tables*** **[3]** ***wherein said processer, upon calculating the required illumination parameters according to best practice standards, directs the controller to adjust the directional light sources that illuminates the specific sub-areas to meet the illumination requirements of the visual activities.***

Alden discloses Claim 8[e]. (Papanikolopoulos Decl., ¶¶140-143.) First, Alden discloses a processor with stored algorithms and data for identifying, among other things, "at least one of… (vi) road objects… and/or vehicles." *See supra* Claims 24[d], [f]-[h]. (Papanikolopoulos Decl., ¶140.)

Second, Alden's processer determines illumination within the illuminated area using at least "pattern recognition." (Papanikolopoulos Decl., ¶¶141-142.) For example, Alden's logic CPU 71 is connected to sensors 51a-51b and receives

information from the sensors regarding patterns of sensed light. (Alden, [0027].) When there is an oncoming vehicle, light from it "passes through [the] primary lens 49" in sensor unit 45, converges, and "fall[s] upon one or more sectors [] within the detector array 51 where it is detected":

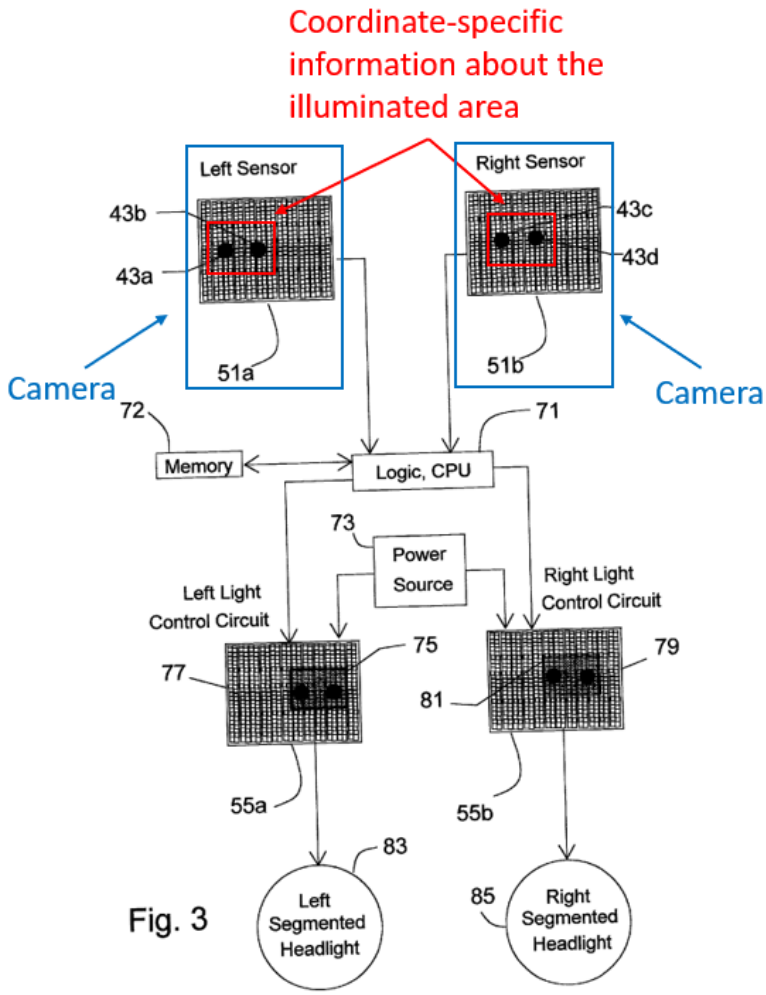

Fig. 3

(Alden, Fig. 3, [0026]-[0027].) As shown, each sensor "detects the two headlights of [oncoming vehicle] 41" at first and second illuminated spots 43a-43d, and "[e]lectrons corresponding to the position and intensity of light are categorized by a

logic and CPU 71 and stored in a memory 72" as a "map of sensed light." (*Id.*, [0027]-[0028], Figs. 3-4.) *See also supra* Claim 24[e].

CPU 71 then compares these maps and assesses whether they appear to be vehicles, including based on the "intensity" and "distance" of the light patterns. (*Id.*, [0028], Fig. 4.) If the light patterns are determined to be a vehicle, then CPU 71 will adjust illumination of light in the sector(s) containing those patterns, instructing the control circuitry to, for example, power the lighting elements to switch to low beam light or to high beam light, depending on whether they direct light to the sectors where the other vehicle is located. (Alden, [0027]-[0029].) *See also supra* Claim 24[g].

Third, Alden discloses that after determining which lighting elements to dim and which to set to high beam, the processor sends signals to the control circuits to switch some sectors to dim, low beam light, and others to high beam. (*Id.*, Fig. 4, [0027]-[0028]; *see also* Fig. 3, [0025]-[0026].) *See also* supra Claim 24[g]. Thus, once Alden determines that the "light for both drivers is concurrently optimized," CPU 71 directs the control circuitry to adjust the directional light sources that illuminates the specific sub-areas to meet the illumination requirements of the visual activities, such as to dim the space containing another vehicle to minimize glare. (Alden, [0006], [0026]-[0027], Fig. 2; Papanikolopoulos Decl., ¶143.)

2. Dependent Claim 10

The illumination device of claim 8,* [1] *wherein the controller receives real time information from the camera and* [2] *wherein the processor, using image recognition capability, directs the controller to adjust at least one of (i) the intensity, (ii) the spectral light distribution and, (iii) the direction of the light sources based on at least one of (i) where people requiring illumination are located, (ii) what object the person is viewing and (iii) what visual task the person needs to perform.

Alden in view of Kondo renders obvious Claim 10. (Papanikolopoulos Decl., ¶¶144-146.) First, Alden discloses that its "controller" receives data from left and right camera sensors 51a-51b:

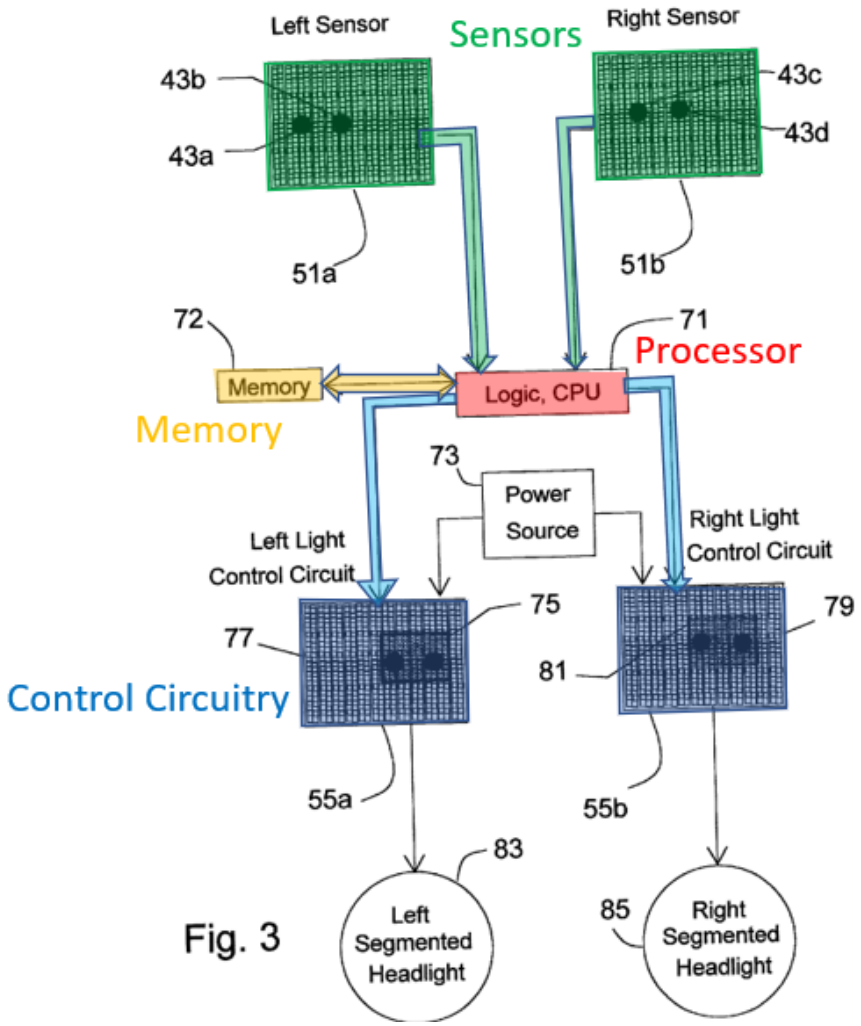

Fig. 3

(Alden, Fig. 3 (annotated), [0027]; *see also* [0026], Fig. 2.) *See also supra* Claim 24[g]. Alden also discloses that CPU 71 processes this sensor data to determine how to adjust the headlights and instruct the control circuitry "so as to be responsive to changing environmental conditions ***in real time.***" (*Id.*, [0028].) *See also supra* Claim 24[g].

Second, Alden discloses that its processor, using its image recognition capability, directs the control circuitry to adjust the intensity of light sources based on (a) where someone requiring illumination (the driver) is located, (b) what objects the driver is viewing (*e.g.*, oncoming vehicles), and (c) what task the driver needs to perform (*i.e.*, driving in traffic). (Alden, [0027]-[0028]; Papanikolopoulos Decl., ¶145.) When the CPU detects an oncoming vehicle in a particular sector based on sensor data, it will instruct the control circuitry to cause a group of LEDs pointing in the direction of that sector to dim, while instructing the controller to cause other LEDs not pointing at that sector to switch to high beam. *See supra* Claim 24[g]. As a result, "the light sent to the sensed vehicle location is dimmer than the light sent to all other areas of the headlight distribution area." (Alden, [0028].) Alden discloses that this reduces glare: "the driver of 41 [oncoming

vehicle] has minimum glare while the driver of 47 [vehicle implementing Alden's system] has maximum light." (*Id.*; *see also* Abstract, [0005].)[10]

3. Dependent Claim 11

The illumination device of claim 8, further comprising at least one of the directional light sources mounted on the movable structure where the movement of the light source direction is automatically controlled by the controller.

Alden in view of Kondo renders obvious Claim 11. (Papanikolopoulos Decl., ¶147.) As discussed, it would have been obvious to a POSITA to apply the teachings of Kondo to mount Alden's LEDs to a movable structure and use the same controller that automatically controls the intensity of the lighting elements to control the direction of the light sources. *See supra* Claims 8[b], 8[d]. For example, a POSITA would have been motivated to apply such teachings of Kondo to Alden, as the references are in the same field, Alden already contemplates re-directing

[10] Alden can similarly adjust the direction of the beam emitted from the headlamps. For example, Alden discloses emitting a low beam light at an oncoming vehicle. As that vehicle continues to get closer, the direction of the beam of dim light will change (*e.g.*, shift), with different LEDs being used to project light dim beam light projected at a different angle relative to the equipped vehicle. (*See* Papanikolopoulos Decl., ¶146; *see also* Alden, [0036], Fig. 11 (re-directing light around corner based on light from roadside signs).)

lighting in various ways, and using the swivel of Kondo as controlled by a controller would have simply been a known method in a similar system that would have provided greater flexibility. (Papanikolopoulos Decl., ¶147.)

4. Dependent Claim 12

The illumination device of claim 11, providing a different illumination to a sub-area based on usage wherein the controller interpreting images from the camera adjusts the moveable light sources such that they provide the required illumination in a sub-area proximate to the individuals as they move around in the illuminated area.

As discussed, Alden discloses that the CPU repeatedly checks the status of the sensor unit, calculates the location of oncoming vehicles from sensor unit information, and determines which headlights need to be dimmed or switched to high beam in an iterative process, "so as to be responsive to changing environmental conditions in real time." *See supra* Claims 24[g], 8[e]. This includes continuously adjusting the lighting elements so that they provide dim, low beam light to areas proximate to both drivers of equipped and oncoming vehicles as they move. *Id.* (Papanikolopoulos Decl., ¶148.)

Further, Alden in view of Kondo renders obvious Claim 12. (*Id.*, ¶149.) Kondo discloses that the direction of the light source can be adjusting using a swivel mount and that this can be automatically controlled by a controller. *See supra* Claims 8[b], 8[d], 11. For the reasons given above, it would have been obvious to a POSITA to apply these teachings and mount Alden's LEDs to a

movable structure and use the same controller that automatically controls the intensity of the lighting elements to control the direction of the light sources. *Id.* A POSITA would have understood this would have enabled Alden to continue to illuminate areas proximate to vehicle drivers as they move, but would have added greater flexibility to the system (*e.g.*, in the range of light). (Papanikolopoulos Decl., ¶149.)

5. Dependent Claim 13

The illumination device of claim 8, wherein the illuminated area is a road and the objects include road signs.

Alden in view of Kondo renders obvious Claim 13. (Papanikolopoulos Decl., ¶150.) For example, Alden's headlight system can "concentrate light to look around corners in response to road conditions," thereby illuminating the road. (Alden, Fig. 11, [0036].) Alden can also detect road "signs," as it can sense "that the road turns by receiving light from reflectors such as a reflector 157," and, accordingly, light emitted from the headlights is "directed into the corner to maximize the driver's ability to see there." (*Id.*) The roadside reflectors 157 would be detected using the same process described with respect to Figures 3-4, where "objects" are sensed based on detected received light above threshold limits at a plurality of sensor positions. (*Id.*, [0027]-[0028], Figs. 3-4; Papanikolopoulos Decl., ¶150.) A POSITA would understand that a roadside reflector is a type of

traffic sign, as it signals to the driver that the road is curving. (Papanikolopoulos Decl., ¶150.) *See also supra* Claims 26/34/42.

6. Dependent Claim 14

The illumination device of claim 8, further comprising at least one of the directional light sources on an automatic swivel joint and providing spot lights of limited beam angle for task lighting while other light source provide general illumination to the illuminated area.

Alden in view of Kondo renders obvious Claim 14. (Papanikolopoulos Decl., ¶¶151-152.) Kondo discloses at least one of the directional light sources on an automatic swivel joint, *i.e.*, swivel lights 11L-11R, which provide spot lights of limited beam angle for task lighting, such as illuminating the turning direction of the vehicle, while other light sources, such as the headlights 10L-10R provide general illumination to the illuminated area. *See supra* Claims 8[b], 8[d], 11.

For the reasons given above, it would have been obvious to a POSITA to mount Alden's LEDs to the automatic swivel and use the same controller that automatically controls the intensity of the lighting elements to control the direction of the light sources. *Id.* A POSITA would have understood that after applying this teaching Alden would continue to be able to illuminate discrete areas with one light level (such in the area of a turn or a nearby, oncoming vehicle), while illuminating other areas with another, only now it would have greater flexibility (*e.g.*, in its angle and range of light). (Papanikolopoulos Decl., ¶152.)

D. <u>Ground 4</u> – Alden (as Modified by Kondo) in View of Stam Renders Obvious Claims 15-18

1. Dependent Claim 15

The illumination device of claim 8, further comprising a controller with communication capability to other devices, where the camera in one location obtains information and the controller process the information and communicates the camera obtained information to a second device.

Alden (as modified by Kondo) in view of WO200107538 ("**Stam**")[11] (EX1008) renders obvious Claim 15. (Papanikolopoulos Decl., ¶¶153-154.) Stam discloses "a control system for controlling the exterior lights of a vehicle," as shown in Figure 11 below:

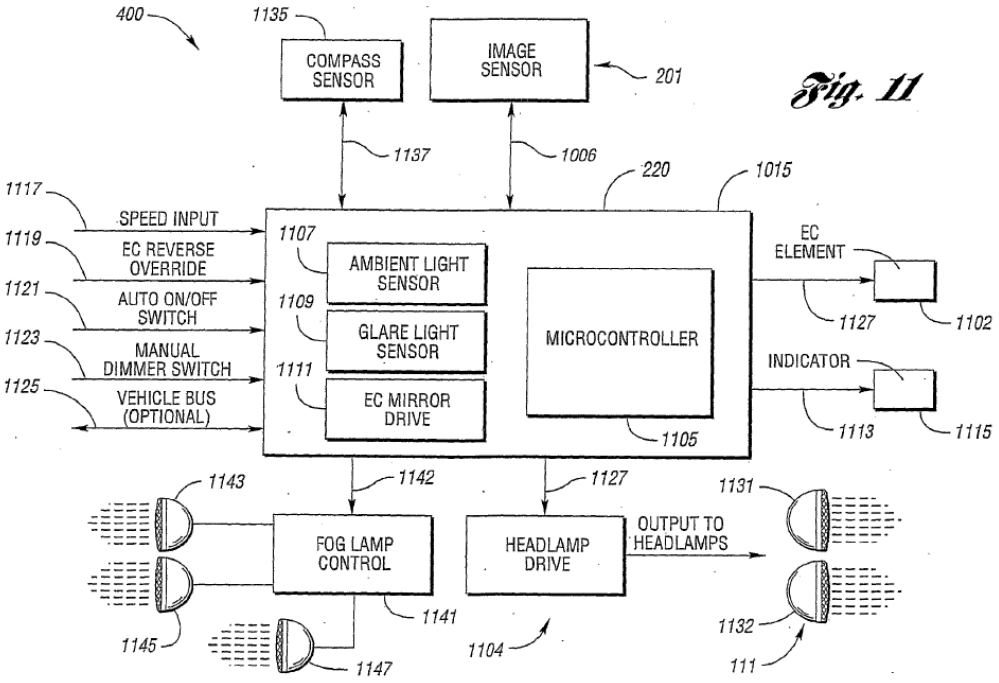

[11] Stam published on September 27, 2001, and is prior art under at least pre-AIA 35 U.S.C. §102(a).

(Stam, 9:8-9.) The exterior lights include headlights and other lights such as tail lights, fog lights, brake lights etc. (*Id.*, 9:9-12.) Stam's control system includes a camera image sensor 201 and a microcontroller 1105 which "receives image signals from the image sensor 201, processes the images, and generates output signals." (*Id.*, 25:4-5, 14:23-30.) Stam also discloses a fog lamp control 1141, which receives fog light control output 112 generated by the microcontroller 1105 and "controls front fog lamps 1143 and rear fog light 1145 to turn ON and OFF." (*Id.*, 27:14-17.) Stam further discloses that "[f]og may be detected by using the image sensor and optical system." (*Id.*, 63:15-16.) Thus, Stam discloses that the microcontroller 1105 processes the information obtained by the camera image sensor 201, and communicates the camera obtained information to the fog lights (a "second device"). (Papanikolopoulos Decl., ¶153.)

A POSITA would have been motivated to implement the teachings in Stam to Alden's system. (*Id.*, ¶154.) Stam is in the same field as Alden, and similarly discloses vehicles with headlamps that can be controlled to change brightness and beam patterns so as to "maximize the illuminated area in front of the vehicle without causing excessive glare in the eyes of other drivers." (Stam, Abstract.) Like Alden, Stam receives data from sensors, and controls headlights to "control their beam patterns in response to objects detected" in the vicinity of the vehicle. (Stam, 2:28-5:23.) Stam merely adds that the same image sensor and optical system "for the

headlamp ON/OFF and headlamp dimmer control" could also be used to detect other conditions such as fog, and other exterior lights on the vehicle like fog lights could be controlled based on the sensed information. (Papanikolopoulos Decl., ¶154.) A POSITA would have had a reasonable expectation of success in implementing Stam's teaching in Alden's system, *i.e.*, using the same sensor to collect data for controlling other exterior lights on the vehicle. (*Id.*) Alden's headlights would continue to operate the same way, and no substantial changes to any would be necessary. (*Id.*) And a POSITA would have been motivated to use the same image sensor for control of different exterior lights on the vehicle. (*Id.*)

2. Dependent Claim 16

The illumination device of claim 15, where the illuminated area is a road and the second device to where the camera obtained information is communicated to is a lighting fixture.

Alden (as modified by Kondo) further in view of Stam renders obvious Claim 16. (Papanikolopoulos Decl., ¶155.) Stam discloses that microcontroller 1105 communicates camera-obtained information to the fog lights on the vehicle, which illuminate the road. *See supra* Claim 15. It would have been obvious to apply these teachings to Alden for the reasons explained above. *Id.*

3. Dependent Claim 17

The illumination device of claim 16, where the processor uses information obtained from the cameras and exchanged between fixtures for identifying traffic requirements in the illuminated area and from the vehicles locations and geometry determining the illumination requirements of the illumination area thereby

directing the controller to adjust the directional light sources to meet the illumination requirements.

Alden (as modified by Kondo) in view of Stam renders obvious Claim 17. (Papanikolopoulos Decl., ¶156.) Alden discloses CPU 71 (1) identifying changing "environmental conditions," such as an oncoming vehicle ("traffic") in the area illuminated by vehicle headlights based on camera data; (2) calculating the location and geometry of the sensed vehicle; (3) determining which portions of the headlights to be dimmed or switched to high beam based on the calculation ("illumination requirements"); and (4) directing the control circuitry to reduce or switch the intensity of light emitted from selected light sources in the headlights, such as LEDs, so as to reduce glare to the driver of the sensed vehicle. *See supra* Claims 24[e], 24[g].

4. Dependent Claim 18

The illumination device of claim 17, wherein the controller is programmed to adjust at least one of (i) increase illumination with an approach of a vehicle, and (ii) change beam cut-off levels as the vehicle advances toward the lighting fixture to eliminate glare.

Alden (as modified by Kondo) in view of Stam renders obvious Claim 18. (Papanikolopoulos Decl., ¶157.) As discussed, Alden discloses changing beam cut-off levels as the sensed oncoming vehicle advances towards the equipped vehicle to eliminate glare. *See supra* Claim 24[g]. That is, when the vehicle approaches and gets close enough, Alden changes the beam cut-off levels in the sector where the

vehicle is located so that the beam is reduced to dim, low beam light. (Papanikolopoulos Decl., ¶157.)

IX. TRIAL SHOULD BE INSTITUTED

A. *Fintiv* Factors

The Board should institute review because Petitioner has been diligent in filing its Petitions and the circumstances surrounding the parallel district court cases do not warrant discretionary denial under § 314(a). *Sotera Wireless, Inc. v. Masimo Corp.*, IPR2020-01019, Paper 12 at 11-21 (Dec. 1, 2020) (precedential) (citing *Apple, Inc. v. Fintiv, Inc.*, IPR2020-00019, Paper 11 (Mar 20, 2020) (precedential)). These cases are in the early stages: there is no case schedule; fact discovery has not taken place; no *Markman* or substantive proceedings have taken place; and no trial date is set. Further, the cases have been indefinitely stayed ***by agreement of the parties*** pending investigation into whether the plaintiff, Torchlight Technologies, has standing. *See, e.g.*, *Torchlight Technologies, LLC v. Daimler AG, et al.*, No. 1:21-CV-751, D.I. 124-125. Given the foregoing, it is speculative that any court will address the distinct invalidity challenges raised in this Petition.

B. 35 U.S.C. § 325(d)

The Board should decline to exercise discretion under § 325(d).

First, Claims 8, 10-18, 24-47 are each subject to only ***one*** other IPR challenge. Those challenges were brought by an entity unrelated to and that competes with Petitioner: Volkswagen. Torchlight Technologies has accused different products of Petitioner and Volkswagen of infringement, such that there are distinct issues in the (alleged) infringement proceedings between Petitioner and Volkswagen. *Id.*, D.I. 97 at ¶¶ 49-57 (accusing Mercedes' 84 LED multi-row headlamp system), 74-82 (accusing Audi's Matrix system). It is also speculative to assume, at the institution deadline of this Petition, that Volkswagen's IPR challenges against the '551 will ultimately reach a Final Written Decision. Over a quarter of all IPRs settle before Final Written Decision. EX1009 at 9.

Second, significantly, the prior art herein, including Alden in particular, was never considered by the Examiner, let alone applied in a rejection. Further, none of the other pending IPR proceedings against the '551 include Alden or the combinations of Alden with other references as presented herein. *See Oticon Med. AB v. Cochlear Ltd.*, IPR2019-00975, Paper 15 at 20 (Oct. 16, 2019) (precedential) (noting "[t]here is new, noncumulative prior art asserted in the Petition"). Petitioner's grounds thus present art that is not the same or substantially the same as art previously considered by the Office. *Advanced Bionics v. MED-EL*

Elektromedizinische Geräte GmbH, IPR2019-01469, Paper 6 at 7-9 (Feb. 13, 2020).[12]

X. CONCLUSION

Petitioner respectfully requests that a Trial be instituted. Claims 8, 10-18, 24-47 of the ’551 should be cancelled as anticipated or obvious over the prior art.

[12] Should Patent Owner raise a *Fintiv* or § 325(d) challenge to the Petition, Petitioner intends to respond to any counter-arguments Patent Owner may raise.

Dated: June 7, 2023

Respectfully submitted,

/s/ Celine J. Crowson

Celine Jimenez Crowson (Reg. No. 40,357)
Joseph J. Raffetto (Reg. No. 66,218)
Scott Hughes (Reg. 68,385)
Ryan Stephenson (Reg. 76,608)
HOGAN LOVELLS US LLP
555 13th Street N.W.
Washington, D.C. 20004
Telephone: 202.637.5600
Facsimile: 202.637.5910

Counsel for Petitioner Mercedes-Benz USA, LLC

Table of Exhibits

Exhibit No.	Description
1001	U.S. Patent No. 9,955,551 ("**'551**")
1002	Original File History for the '551 Patent
1003	Declaration of Dr. Nikolaos Papanikolopoulos
1004	Curriculum Vitae of Dr. Nikolaos Papanikolopoulos
1005	U.S. Patent Publication No. 2003/0,137,849 ("**Alden**")
1006	U.S. Patent No. 6,049,749 to Kobayashi ("**Kobayashi**")
1007	U.S. Patent Application No. 2002/0057572 ("**Kondo**")
1008	WIPO Patent Publication No. 2001/070538 ("**Stam**")
1009	PTAB Trial Statistics April 2023 IPR, PGR
1010	Reexamination File History for the '551 Patent
1011	Patent Owner Disclaimer under 37 CFR 1.321(a)
1012	Reissue File History for the '551 Patent

Certificate of Word Count

I certify that, in accordance with 37 C.F.R. § 42.24(d), the word count for the foregoing Petition totals 13,906. This is less than the permitted total under the 37 C.F.R. 42.24(a)(1)(i).

/s/ *Celine J. Crowson*
Celine J. Crowson (Reg. No. 40,357)
One of the attorneys for Petitioner Mercedes-Benz USA, LLC

Certificate of Service

The undersigned certifies that, in accordance with 37 C.F.R. § 42.6(e) and 37 C.F.R. § 42.105, the foregoing Petition for Inter Partes Review, and Exhibits 1001 through 1009 were served on June 7, 2023, by Overnight Courier at the following address of record and addresses known to Petitioner as likely to effect service and the address of record for the ’551 patent:

Brooks Kushman
1000 Town Center
22nd Floor
Southfield, MI 48075

/s/ *Nicole Lynch*
Nicole Lynch
Hogan Lovells US LLP
555 Thirteenth Street NW
Washington, DC 20004

Appendix A: Independent Claims Comparison Table

	Claim 24	Claim 32	Claim 40
[p]	An illuminating device having automatic control of light provided to an illuminated area comprising:	An illuminating device having automatic control of light provided to an illuminated area comprising:	An illuminating device having automatic control of light provided to an illuminated area comprising:
[a]	a structure for incorporating illuminating device elements, wherein the structure comprises a motor vehicle;	a structure for incorporating illuminating device elements, wherein the structure comprises a motor vehicle;	a structure for incorporating illuminating device elements, wherein the structure comprises a motor vehicle;
[b]	a plurality of individually controllable LEDs incorporated in the structure via at least one headlamp mounted to the structure, each headlamp including at least one of the LEDs, the LEDs in communication with a power source;	a plurality of individually controllable LEDs incorporated in the structure via at least one headlamp mounted to the structure, each headlamp including at least one of the LEDs, the LEDs in communication with a power source;	a plurality of individually controllable LEDs incorporated in the structure via at least one headlamp mounted to the structure, each headlamp including at least one of the LEDs, the LEDs in communication with a power source;
[c]	electronic circuitry apparatus for the controlled powering of the LEDs and other of the illuminating device elements;	electronic circuitry apparatus for the controlled powering of the LEDs and other of the illuminating device elements;	electronic circuitry apparatus for the controlled powering of the LEDs and other of the illuminating device elements;
[d]	one or more processors;	one or more processors;	one or more processors;
[e]	one or more sensors, including one or more cameras, placed on the structure for detecting coordinate-specific information about the	one or more sensors, including one or more cameras, placed on the structure for detecting coordinate-specific information about the	one or more sensors, including one or more cameras, placed on the structure for detecting coordinate-specific information about the

	illuminated area, at least one of said cameras in communication with power, and in communication with at least one of the one or more processors;	illuminated area and positioned to capture an image of at least one target, at least one of said cameras in communication with power, and in communication with at least one of the one or more processors;	illuminated area and positioned to capture an image of at least two other vehicles, at least one of said cameras in communication with power, and in communication with at least one of the one or more processors;
[f]	a controller, including at least one of the one or more processors, integrated with the structure via mounting, in communication with the LED controlling power electronic circuitry apparatus,	a controller, including at least one of the one or more processors, integrated with the structure via mounting, in communication with the LED controlling power electronic circuitry apparatus,	a controller, including at least one of the one or more processors, integrated with the structure via mounting, in communication with the LED controlling power electronic circuitry apparatus,
[g]	said controller arranged to process the information communicated from the cameras and to automatically control the light provided to the illuminated area; and	said controller arranged to process the information communicated from the cameras and to automatically control the light provided to the illuminated area; and	said controller arranged to process the information communicated from the cameras and to automatically control the light provided to the illuminated area; and
[h]	memory storing instructions that, when executed by one or more processors of the controller, enable the controller to:	memory storing instructions that, when executed by one or more processors of the controller, enable the controller to:	memory storing instructions that, when executed by one or more processors of the controller, enable the controller to:
[i]	determine coordinates corresponding to another vehicle, based on the coordinate-specific information;	create a beam of diminished illumination illuminating at least a portion of the at least one target with non-glaring illumination,	determine a first cluster of the LEDs illuminating at least a first portion of a first other vehicle based at least in part on data from one or

		created in a broader field of illumination having different intensity than the beam, by one or more changes to characteristics of first light of a cluster of the LEDs providing the first light directed at the at least a portion and creating the beam, the beam diminished in intensity relative to the broader field of illumination illuminating at least above and on both sides of the beam; and	more of the sensors indicating a first position associated with the first other vehicle;
[j]	select a cluster of the LEDs that emit light toward at least a portion of the other vehicle based on the LEDs having emission aimings associated with the first coordinates; and	follow, based at least in part on data from one or more of the cameras, the at least one target with the diminished illumination as the at least one targe changes location relative to the motor vehicle.	diminish glaring illumination of the first other vehicle by a first change to one or more characteristics of first light of at least the first cluster;
[k]	change emission of the selected cluster of LEDs relative to emission of other LEDs not included in the cluster to create headlamp illumination that preserves a first level of illumination illuminating past the other vehicle while preventing glare to a driver of the other vehicle.		determine a second, different cluster of the LEDs illuminating at least a second portion of a second other vehicle based at least in part on data indicating a second position associated with the second other vehicle;

[l]			diminish glaring illumination of the second other vehicle by a second change to one or more characteristics of second light of at least the second, different cluster;
[m]			wherein the first and second changes decrease intensity of first emission from the first cluster and second emission from the second cluster relative to a third emission, from the at least one headlamp, illuminating an area between the first and second portion.

Appendix B: Dependent Claims Comparison Tables

Claim 27	Claim 25
[27pre] The illuminating device of claim 26, wherein:	**[25pre]** The illuminating device of claim 24, wherein:
[27a] the changed emission includes a change to at least one of intensity or color or a change of at least one LED of the cluster to a non-emitting state;	**[25a]** the changed emission includes a change to at least one of intensity or color or a change of at least one LED of the cluster to a non-emitting state; and
[27b] the cluster includes a plurality of the LEDs and the cluster includes non-contiguous LEDs; and	**[25b]** the cluster includes a plurality of the LEDs and the cluster includes non-contiguous LEDs.
[27c] the memory further stores instructions that, when executed by one or more processors of the controller, enable the controller to accommodate the road curvature by changing illumination in at least a direction of the	

road curvature by adaptation of light pattern in at least one of color, intensity or spatial distribution by modification of light associated with one or more of the LEDs.	
Claim 35	**Claim 33**
[35pre] The illuminating device of claim 34, wherein:	**[33pre]** The illuminating device of claim 32, wherein:
[35a] the one or more changes to characteristics of the first light include a change to at least one of intensity or color or a change of at least one LED of the cluster to a non-emitting state;	
[35b] the cluster includes a plurality of the LEDs and the cluster includes non-contiguous LEDs;	
[35c] the memory further stores instructions that, when executed by one or more processors of the controller, enable the controller to select the cluster of LEDs based at least in part on known aimings of the first light associated with the first cluster having a correlation to the at least the portion, the known aimings based at least in part on at least one of known directionality of light emitted by the first cluster or known directionality of light emitted by the first cluster exiting the headlamp; and	**[33a]** the memory further stores instructions that, when executed by one or more processors of the controller, enable the controller to select the cluster of LEDs based at least in part on known aimings of the first light associated with the first cluster having a correlation to the at least the portion, the known aimings based at least in part on at least one of known directionality of light emitted by the first cluster or known directionality of light emitted by the first cluster exiting the headlamp;
[35d] the memory further stores instructions that, when executed by one or more processors of the controller, enable the controller to accommodate the road curvature by changing illumination in at least a direction of the road curvature by adaptation of light pattern in at least	**[33b]** the data includes image data;

one of color, intensity or spatial distribution by modification of light associated with one or more of the LEDs.	
	[33c] the one or more changes to characteristics of the first light include a change to at least one of intensity or color or a change of at least one LED of the cluster to a non-emitting state; and
	[33d] the cluster includes a plurality of the LEDs and the cluster includes non-contiguous LEDs.
Claim 43	**Claim 41**
[43pre] The illuminating device of claim 42, wherein:	**[41pre]** The illuminating device of claim 40, wherein:
	[41a] the data includes image data;
[43a] at least one of first or second change to characteristics of light associated with at least one of the first or second cluster of LEDs includes at least one of a change to color, to intensity, or a change of at least one LEDs of the respective cluster to a non-emitting state;	**[41b]** at least one of first or second change to characteristics of light associated with at least one of the first or second cluster of LEDs includes at least one of a change to color, to intensity, or a change of at least one LEDs of the respective cluster to a non-emitting state;
[43b] at least one of the first cluster or the second cluster includes a plurality of the LEDs and at least one of the first cluster or the second cluster includes non-contiguous LEDs;	**[41c]** at least one of the first cluster or the second cluster includes a plurality of the LEDs and at least one of the first cluster or the second cluster includes non-contiguous LEDs;
[43c] the determination of the first cluster includes selection of the first cluster based at least in part on known aimings of light associated with the first cluster having a correlation to the first position, the known aimings based at least in part on at least one of known	**[41d]** the determination of the first cluster includes selection of the first cluster based at least in part on known aimings of light associated with the first cluster having a correlation to the first position, the known aimings based at least in part on at least one of known

directionality of light emitted by the first cluster or known directionality of light emitted by the first cluster exiting the headlamp;	directionality of light emitted by the first cluster or known directionality of light emitted by the first cluster exiting the headlamp; and
[43d] the determination of the second cluster includes selection of the second cluster based at least in part on known aimings of light associated with the second cluster having a correlation to the second position, the known aimings based at least in part on at least one of known directionality of light emitted by the second cluster or known directionality of light emitted by the second cluster exiting the headlamp; and	**[41e]** the determination of the second cluster includes selection of the second cluster based at least in part on known aimings of light associated with the second cluster having a correlation to the second position, the known aimings based at least in part on at least one of known directionality of light emitted by the second cluster or known directionality of light emitted by the second cluster exiting the headlamp.
[43e] the memory further stores instructions that, when executed by one or more processors of the controller, enable the controller to accommodate the road curvature by changing illumination in at least a direction of the road curvature by adaptation of light pattern in at least one of color, intensity or spatial distribution by modification of light associated with one or more of the LEDs.	