Downloaded from SAE International by Andrew Turner, Saturday, July 29, 2023

SAE TECHNICAL PAPER SERIES

2004-01-0434

Studies for Headlamp Optical Design Using LEDs

Ben Wang and Jianzhong Jiao
North American Lighting, Inc.

Reprinted From: Lighting (SP-1875)

ISBN 0 7680 1427-1

9 780768 014273

SAE International™

2004 SAE World Congress
Detroit, Michigan
March 8-11, 2004

400 Commonwealth Drive, Warrendale, PA 15096-0001 U.S.A. Tel: (724) 776-4841 Fax: (724) 776-5760 Web: www.sae.org

SPERO EX. 2052

Downloaded from SAE International by Andrew Turner, Saturday, July 29, 2023

All rights reserved. No part of this publication may be reproduced, stored in a retrieval system, or transmitted, in any form or by any means, electronic, mechanical, photocopying, recording, or otherwise, without the prior written permission of SAE.

For permission and licensing requests contact:

SAE Permissions
400 Commonwealth Drive
Warrendale, PA 15096-0001-USA
Email: permissions@sae.org
Fax: 724-772-4891
Tel: 724-772-4028

Global Mobility Database®

All SAE papers, standards, and selected books are abstracted and indexed in the Global Mobility Database.

For multiple print copies contact:

SAE Customer Service
Tel: 877-606-7323 (inside USA and Canada)
Tel: 724-776-4970 (outside USA)
Fax: 724-776-1615
Email: CustomerService@sae.org

ISBN 0-7680-1319-4
Copyright © 2004 SAE International

Positions and opinions advanced in this paper are those of the author(s) and not necessarily those of SAE. The author is solely responsible for the content of the paper. A process is available by which discussions will be printed with the paper if it is published in SAE Transactions.

Persons wishing to submit papers to be considered for presentation or publication by SAE should send the manuscript or a 300 word abstract of a proposed manuscript to: Secretary, Engineering Meetings Board, SAE.

Printed in USA

Downloaded from SAE International by Andrew Turner, Saturday, July 29, 2023

2004-01-0434

Studies for Headlamp Optical Design Using LEDs

Ben Wang and Jianzhong Jiao
North American Lighting, Inc.

Copyright © 2004 SAE International

ABSTRACT

The studies for headlamp optical design using current available and future projected white LEDs have been conducted. With desires of high performance and compact packaging sizes for both high and low beam headlamps, using LED light sources is a great challenge for the headlamp design optical engineers for light collecting efficiency, beam pattern compression and optical accuracy. Although total lumen flux produced by the LEDs may be comparable to the exiting light sources, e.g., incandescent bulbs, the optical and mechanical characteristics of LEDs may limit the headlamp applications. The paper identifies the etendue concerns and limitations for automotive headlamps when using LED light sources. It provides a guideline for considerations of using LEDs for automotive headlamp applications.

INTRODUCTION

The recent developed white LEDs may now be possibly used for vehicle headlamp low and high beam designs. In the studies shown in this article, it has been realized that the most important characteristics are LED total lumen output in conjunction with its emitting area dimensions. If both of those LED characteristics are comparable to the current tungsten halogen bulb, the headlamp can be rather easily designed to the meet FMVSS requirements. However, the currently available white LED's lumen output is around 30 lm (maximum), which is about 3% of the typical tungsten halogen bulb's light flux output (1000 lm for 9006 bulb). If the LED's output increases to 100 lm in the near future, it will be 10% of the tungsten halogen bulb's output. This could lead to an assumption that 10 LEDs with 100 lm output of each can be used to design an adequate tungsten halogen equivalent low-beam headlamp if the lamp system has the same light collection efficiency. Similarly, 15 LEDs can be assumed to be used to design the high-beam.

When using multiple LEDs to design a headlamp, there may be three possible approaches: (1) Each LED light source has its dedicated optical unit; (2) Several LEDs share one optical unit or part of the unit; (3) All of LED uses one optical unit. In the studies below, it is realized that when using multiple LEDs and several optical units, the headlamp space or aperture available for the tungsten halogen source is being divided into several segments. As the results, the light collection efficiency for the LED system may be reduced. In order to maintain the system collection efficiency, one can shorten the focal length of the optical unit used for the LED source. However, smaller focal length system leads to larger light source images as well as higher system accuracy required. Both will be adding difficulties to the headlamp design and manufacturing.

In the LED headlamp studies, one can consider to use the "Traditional" and "Nontraditional" optical approaches. The so-called traditional optics included reflector optics, lens optics or combinations, projector module. Nontraditional optics may refer to Total Internal Reflection (TIR), Compound Parabolic Concentrator (CPC)[1], light guide, and others.

In general, the vehicle exterior lamp dimensions are dictated by styling and structure of the vehicle design. With desires of high performance and compact packaging size for both high and low beams, the issues of using LED light sources regarding light collection efficiency, beam pattern compression and optical accuracy, are great concerns and challenges for the optical engineers.

The limitations of using an LED light source to design headlamp beam pattern discussed in this paper are based on principle of the non-imaging optical system. (1) The system cannot change (increase) the luminance (or radiance) of the light source used; (2) Etendue value of the output from the system is always equal or larger than the input value.[2] Because of the principle and the design restrictions for the system aperture and package size, the luminance of LEDs must be comparable or higher than the existing tungsten halogen light sources.

TRADITIONAL OPTICS FOR LED HEADLAMP

A) REFLECTOR OPTICS

Reflector optics (or Free-Form Reflector, FFR) has been

SPERO EX. 2052

Downloaded from SAE International by Andrew Turner, Saturday, July 29, 2023

commonly used for vehicle headlamp design. When multiple LED sources are used for one headlamp, each LED may have one FFR unit. The headlamp then consists of several FFR units. Because of the headlamp aperture and package limitations, small FFR unit with short focal lengths, e.g., approximately 10 mm may be used. Longer focal length multiple LEDs headlamp may take too big of package space and may not meet lamp size requirement.

Most of the reflector optics is built on a basic parabolic-like shape, in which the reflected light spread angle is smaller when the reflection occurs closer to the edge of the reflector (see Fig. 1). Smaller spread light is used to form hotspot. For a reflector's focal length as small as 10 mm, with LED source effective dimension of 1.5 mm, the spread angle can be 2° - 3° for a 30 mm depth reflector. This spread angle is larger than the spread angle when using tungsten halogen source with similar overall lamp size.

As shown in Fig.1, if one wants to obtain smaller spread angle to form a beam pattern, especially the hotspot of the beam pattern, the size of optical unit needs to be enlarged, so that the reflection on the reflector can occur farther from the source to get smaller reflected light spread angle. However, the smaller focus length reflector leads to higher accuracy and tolerances, which is a big challenge for LED headlamp overall design.

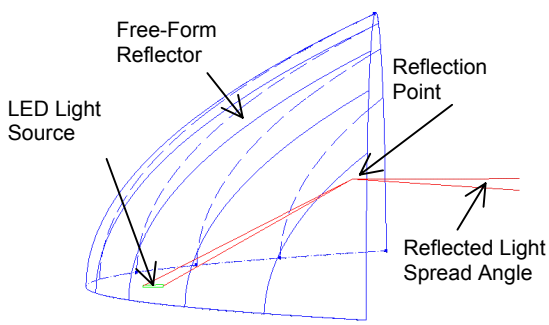

Fig.1 Reflector optics with LED light source

B) LENS OPTICS

When aspherical lens or other type of lens is used to form headlamp beam pattern or hotspot shown in Fig. 2, the LED is located at the focus point of the lens. The spread angle 2θ is related to the focal length of the lens *f*, and size of the emitter *l* as:

$$tan(\theta) = \frac{l}{2f}$$
$$2\theta = arctan\left(\frac{l}{2f}\right) \approx \frac{l}{f} \qquad (1)$$

The light collection efficiency η is related to the numerical aperture (*N.A.* = *d/f*) of the lens as:

$$\tan\alpha = \frac{d}{2f}$$
$$\alpha = \arctan\left(\frac{d}{2f}\right) \approx \frac{d}{2f} \qquad (2)$$
$$\eta = \sin^2\alpha \approx \alpha^2 \approx \left(\frac{d}{2f}\right)^2$$

From equations (1) and (2), one can realize that smaller emitter size (smaller *l*) or longer focal length (*f*) leads to smaller spread angle, which is not related to diameter or size of the lens. On the other hand, larger lens numerical aperture, e.g., larger diameter or longer focal length will allow higher light collection efficiency.[2]

Furthermore, additional lens or optical elements can add horizontal spread to achieve foreground light or other spread of the headlamp pattern. Again, the LED is placed on the focus of lens. The spread angle of beam patter is controlled by the spread optics (see Fig.3). In order to decrease the surface reflection loss, the aspherical lens can combine with the spread optics.

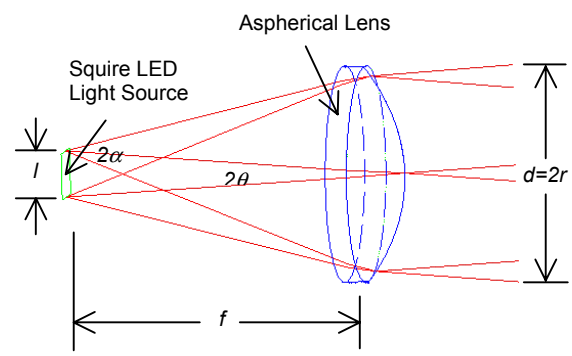

Fig.2 Aspherical lens with LED light source

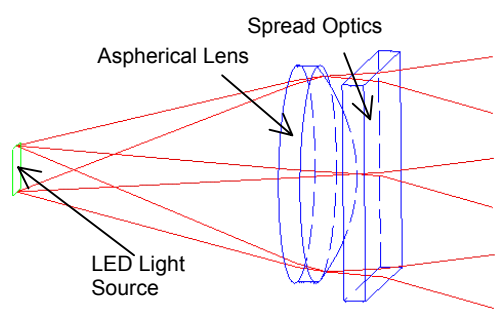

Fig.3 Aspherical lens and spread optics

C) COMBINATION OF REFLECTOR AND LENS

Downloaded from SAE International by Andrew Turner, Saturday, July 29, 2023

OPTICS

Both reflector optics and lens optics have some limitations for light collection efficiency. The light collection loss for the lens optics comes from the larger light emitting angle of the LEDs. Light with larger emitting angles may be collected by an additional reflector shown in Fig. 4. Such combination may improve light collection efficiency.

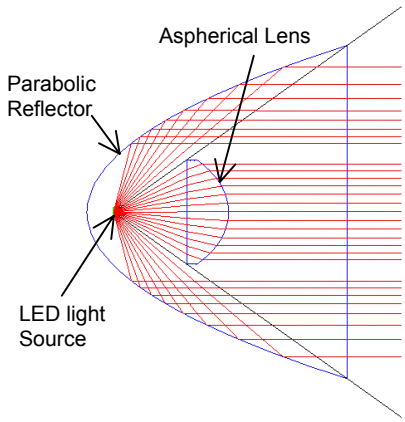

Fig.4 Combination of reflector and lens optics

D) PROJECTOR MODULE SYSTEM

The projector module consists of an elliptical (or compound elliptical) reflector and a projector lens (see Fig. 5). Its light collection efficiency can be very high. However, there is a difference how the lights are being collected by the projector for the LED light source versus tungsten halogen light source. Because of LED's light emitting characteristics, some unique optical arrangement can be made to achieve high collection efficiency.[3]

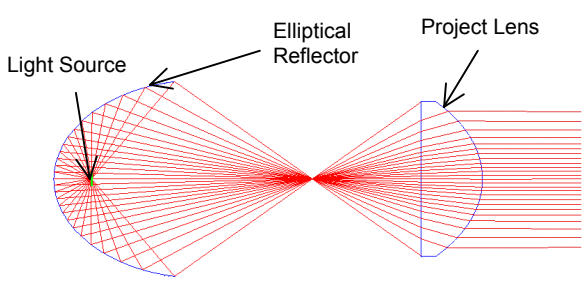

Fig.5 Projector module

NONTRADITIONAL OPTICS FOR HEADLAMP

A) TIR LENS

The numerical aperture of a regular lens is limited by the thickness of the lens, thus the light collection efficiency is limited. Using a Fresnel lens with total internal reflection (TIR) structure, the focal length can be significantly reduced. As the result, the numerical aperture or light collection efficiency is improved. In Fig.6 the center area of lens it is regular Fresnel lens. The TIR structure is formed where the larger emitting angle light hits the lens first surface (Fig. 7). Recently, holographic technology has been used to make this type of lens, named in-axis hologram lens.

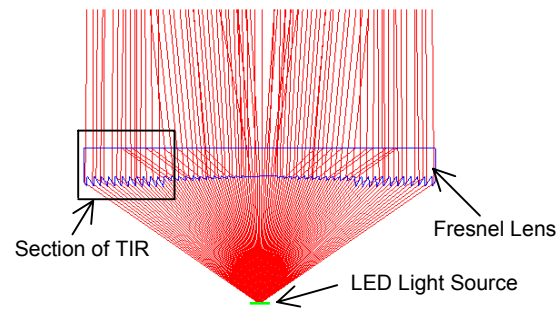

Fig.6 Fresnel lens with TIR structures

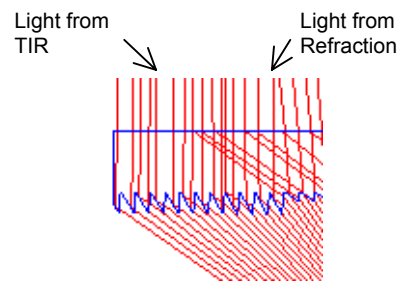

Fig.7 Section of TIR lens

B) COMPOUND PARABOLIC CONCENTRATOR (CPC)

CPC is a non-imaging optic unit which provides an angle-area tradeoff with maximum concentration shown in Fig.8.

$$L = \frac{l \cos\theta \left(1 + \frac{1}{\sin\theta}\right)}{2}. \quad (3)$$

where L is length and l is diameter of entry aperture of CPC.

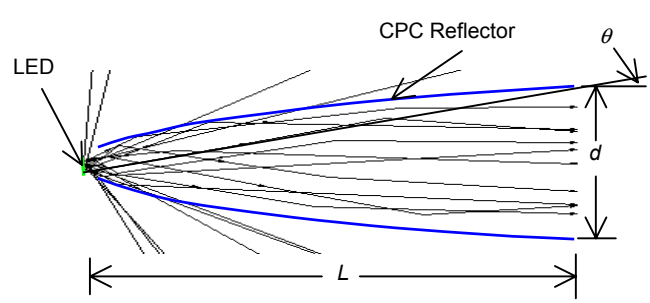

Fig.8 CPC and light collection

Downloaded from SAE International by Andrew Turner, Saturday, July 29, 2023

If a desired spread angle is θ, for given light source dimension l (diameter of entry aperture), the depth of a CPC can be calculated using equation (3). The depth of the CPC can be decreased, then the extra light loss are introduced.[1]

LED HEADLAMP DESIGN PRINCIPLES

In general, an automotive headlamp size, e.g., aperture and entire package is dictated by the vehicle styling and the lamp performance desires. As previously mentioned, the aperture and depth of the lamp set the limitations for light collection efficiency and beam spread angle, which both affect the lamp performance. As an example, if a lens optics is used to design LED headlamp, one can assume that the focus of the lens is f, the diameter of lens aperture is d and the LED emitter dimension is l, then the light collection efficiency η is.

$$\eta = sin^2(\alpha) = sin^2\left[arctan\left(\frac{d}{2f}\right)\right] \quad (4)$$

The spread angle of the output light from the lens 2θ is

$$2\theta = 2\,arctan\left(\frac{l}{2f}\right) \quad (5)$$

For the above lens system, there are always some tolerances relating to how accurately the light source is placed at the focal point of the lens. If one assumes that the LED source location varies near the focal point of the lens perpendicular to the lens axis, and such variation causes the angular variation of the spread, $\Delta\theta$. In practice, then,

$$\delta \approx f \times \tan(\Delta\theta)\,, \quad (6)$$

where δ is considered as the system optical accuracy or tolerance in the unit of mm. For a low-beam headlamp design, based on the visual aiming requirement, $\Delta\theta$ should be typically smaller than 0.2°. If the LED emitter effective dimension is assumed as 1.5 mm, for various of lens structures d and f, the light collection efficiency η, spread angle 2θ and tolerance δ are calculated shown in Table1.

Table 1. η, θ and δ vary with f and d (unit mm)

Option	#1	#2	#3	#4	#5	#6
d f	20 15	20 20	20 25	30 15	30 20	30 25
η	0.31	0.20	0.14	0.50	0.36	0.26
2θ	5.72°	4.30°	3.44°	5.72°	4.30°	3.44°
δ	0.05	0.07	0.10	0.05	0.07	0.10

Option #4 has highest light collection efficiency while option #3 and #6 get smallest spread angle, option #1 and #4 requires highest accuracy.

The optimized approach is to balance overall needs of size, efficiency, and accuracy. A similar approach can be used to analyze the reflector optics system and choose the optimized design parameters.

THE LIMITATIONS USING LED LIGHT SOURCES

A typical automotive headlamp is required to provide a specific output light distribution – beam pattern. For a low-beam headlamp, for example, the beam pattern requirement is based on several factors: (1) sufficient road illumination for driver visibility and safety; (2) glare light control for the oncoming vehicle drivers; (3) lamp aim-ability; and (4) spread and foreground light for driver's comfort. When the headlamp is constructed with multiple optical units or compartments with N LED light sources, each optical unit may have a different etendue value, or provide different luminous intensity and different spread angle. The total lumen flux from a headlamp with multiple optical units and N LED sources can be expressed as:

$$\Phi_{lamp} = L_{lamp}\sum_i A_{(lamp,i)}\Omega_{(lamp,i)} = \eta N L_s A_s \Omega_s\,, \quad (7)$$

where η indicates the system efficiency; A_s is the emitter size of LED; Ω_s is the solid angle of the emitting light from the LED; $A_{(lamp,i)}$ is the lamp ith sub-(projected) aperture; $\Omega_{(lamp,i)}$ is the solid angle of the sub-aperture. L_{lamp} and L_s are the luminance of the lamp and LED respectively. The total lumen output from a headlamp is always less than the total lumens emitted from N pieces LEDs. Because the etendue value of the headlamp cannot be reduced, e.g.,

$$\sum_i A_{(lamp,i)}\Omega_{(lamp,i)} \le N A_s \Omega_s\,, \quad (8)$$

the actual optical system causes the luminance reduction:

$$L_{lamp} = \eta L_s\,. \quad (9)$$

If further assuming that portion of the lamp aperture A_1 and N_1 pieces of LEDs are contributing to the hotspot luminous intensity, then,

$$I_{hotspot} = \frac{1}{\Omega_{hotspot}}\eta N_1 L_s A_s \Omega_s = A_1 \eta N_1 L_s\,. \quad (10)$$

$\Omega_{hotspot}$ is the spread angle for the hotspot. To increase the luminous intensity of the hotspot, for given system efficiency, larger lamp aperture, higher number of LEDs

SPERO EX. 2052

Downloaded from SAE International by Andrew Turner, Saturday, July 29, 2023

is desired. However, because both lamp aperture and number of LEDs that can be physically packaged into the lamp aperture are limited by vehicle level restriction, the hotspot luminous intensity level, or performance is highly depending on the LED's luminance, rather than its total lumen output. Actually, this analogy is also applicable to other part of the beam pattern.

ETENDUE LIMITATIONS LED'S HIGH AND LOW BEAM LAMPS MEETING SAE REQUIREMENTS

A) LED LOW-BEAM LAMP

For designing an adequate (SAE) automotive headlamp low-beam, several design performance values are desired: A) total lumen within the required beam pattern is around 420 lm; B) hotspot candela value is around 25,000 cd; C) large spread angle, 1,000 cd reaches to 35 ° left and right. If the total lumen within the beam pattern is divided into three desired angular zonal areas, it can be expressed as (see Fig. 9):

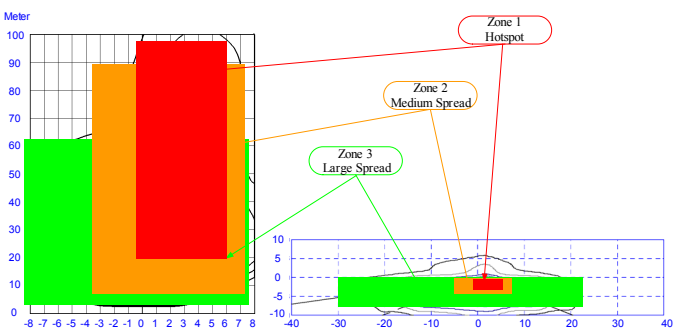

Fig. 9 Low-beam beam pattern intensity zones. The left diagram is the isolux plot projected to a road surface with projection distance in meters. The right diagram is the isocandela plot projected on a test screen. The coordinates are in degrees.

Zone 1 – hotspot: 2° horizontal and 1° vertical solid angle, or 4° horizontal spread and 2° vertical spread and 25,000 cd intensity,

$$\Phi_{(lamp,1)} \cong 50\ lm\,. \tag{11}$$

Zone 2 – medium spread for foreground: 20° horizontal spread (for light projected from 10° left to 10° right horizontally) and 4° vertical spread and 10,000 cd intensity,

$$\Phi_{(lamp,2)} \cong 200\ lm\,. \tag{12}$$

Zone 3 – large spread for light projected from 35° left to 35° right horizontally and 10° vertically and 1,000 cd intensity,

$$\Phi_{(lamp,3)} \cong 170\ lm\,. \tag{13}$$

and total flux of low-beam lamp is:

$$\Phi_{lamp} = \Phi_{(lamp,1)} + \Phi_{(lamp,2)} + \Phi_{(lamp,3)} \cong 420\ lm\,. \tag{14}$$

When using a typical tungsten halogen light source for the design of a low-beam, the lumen output of the light source (e.g, 9006 bulb) is 1,000 lm. If further assuming that the light collection efficiency is 60% and the total system loss (e.g., reflector surface loss, lens surface and transmission loss, etc.) is 30%, to achieve the desired performance described in Equations (11) to (13), the optical system effective aperture required is approximately 12,000 mm^2.

Using the desired performance scenario, one can make comparison for the system effective aperture when using LEDs versus tungsten halogen bulb. If the effective emitter size of the LEDs is A_s = 1.5mm x 1.5mm (larger than the LED chip size because of the dome effect), the total lumen output is Φ_s = 100 lm per LED, and LED light output is a Lambertian distribution $\Omega_s = \pi$, then the light source luminance is L_s = 14.15 cd/mm^2. In order to form the hotspot, we first need to balance the trade off and conflict between the aperture and focal length as discussed in the last section. Because of the limitations of lamp aperture, the optical system focal length, and the dimensions of the LED emitter, the total system efficiency is assumed η = 0.42, which includes reflection loss, transmitting loss, refracting loss and collecting loss (equivalent to the above tungsten halogen case). The total lumen contributed to the hotspot should be:

$$\Phi_{(lamp,1)} = L_{(lamp,1)}\Omega_{(lamp,1)}A_{(lamp,1)} = \eta L_s \Omega_{(lamp,1)} A_{(lamp,1)}\,. \tag{15}$$

In this expression, the optical system is assumed as an etendue conserved system. The light collected by the optical system is not diverged or spread by the system. Realize that the required lumen amount for the hotspot is $\Phi_{(lamp,1)}$ = 50 lm in Zone 1, using the LEDs with the brightness of L_s = 14.15 cd/mm^2, the required aperture for the hotspot is calculated:

$$A_{(lamp,1)} = \frac{\Phi_{(lamp,1)}}{\eta L_s \Omega_{(lamp,1)}} \cong 8{,}000\ mm^2\,. \tag{16}$$

Similarly, the required apertures for medium and large spreads are:

$$A_{(lamp,2)} = \frac{\Phi_{(lamp,2)}}{\eta L_s \Omega_{(lamp,2)}} \cong 8{,}200\ mm^2\,, \tag{17}$$

Downloaded from SAE International by Andrew Turner, Saturday, July 29, 2023

$$A_{(lamp,3)} = \frac{\Phi_{(lamp,3)}}{\eta L_s \Omega_{(lamp,3)}} \cong 1{,}200\ mm^2 . \quad (18)$$

Thus,

$$A_{lamp} = A_{(lamp,1)} + A_{(lamp,2)} + A_{(lamp,3)} \cong 18{,}000\ mm^2 . \quad (19)$$

The result in Equation (19) shows that in order to achieve the low-beam performance (420 lm inside the beam pattern, and 25,000 cd in the hotspot), it takes 50% larger effective aperture when using LEDs that have equivalent total lumen output as a tungsten halogen bulb.

B) LED HIGH-BEAM LAMP

Similar to the low-beam, for designing an automotive high-beam headlamp that meets the SAE photometry requirements, the desired lamp photometric performance is: A) total lumen within the required beam pattern approximately 600 lm; B) hotspot candela value around 50,000 cd; C) large spread angle with 2,000 cd at 15° left and right. Based on this information, one can divide the total lumen within the beam pattern into three angular zonal areas:

Zone 1 – hotspot: 1.5° horizontal and 1.5° vertical solid angle or 3° horizontal spread and 3° vertical spread and 50,000 cd intensity,

$$\Phi_{(lamp,1)} \cong 100\ lm . \quad (20)$$

Zone 2 – medium spread for foreground: 20° horizontal spread (for light projected from 10° left to 10° right horizontally) and 4° vertical spread and 10,000 cd intensity,

$$\Phi_{(lamp,2)} \cong 250\ lm . \quad (21)$$

Zone 3 – large spread for light projected from 15° left to 15° right horizontally and 10° vertically spread and 2,000 cd intensity,

$$\Phi_{(lamp,3)} \cong 250\ lm . \quad (22)$$

and total flux of high-beam lamp is:

$$\Phi_{lamp} = \Phi_{(lamp,1)} + \Phi_{(lamp,2)} + \Phi_{(lamp,3)} \cong 600\ lm \quad (23)$$

When using a typical tungsten halogen light source for the design of a high-beam, the lumen output of the light source (e.g, 9005 bulb) is 1,700 lm. If further assuming that the light collection efficiency is 50% (for a smaller cavity than the low-beam) and the total system loss is 30%, to achieve the desired performance described in Equations (20) to (22), the optical system effective aperture required is approximately 8,000 mm^2.

When using LEDs, the total system efficiency for the high-beam is assumed η = 0.35, then the total lumen contributed to the hotspot can be calculated using the same equation (15). Similar to the low-beam, the required apertures for each zone are:

$$A_{(lamp,1)} = \frac{\Phi_{(lamp,1)}}{\eta L_s \Omega_{(lamp,1)}} \cong 8{,}000\ mm^2 . \quad (24)$$

$$A_{(lamp,2)} = \frac{\Phi_{(lamp,2)}}{\eta L_s \Omega_{(lamp,2)}} \cong 10{,}000\ mm^2 , \quad (25)$$

$$A_{(lamp,3)} = \frac{\Phi_{(lamp,3)}}{\eta L_s \Omega_{(lamp,3)}} \cong 1{,}800\ mm^2 . \quad (26)$$

Thus,

$$A_{lamp} = A_{(lamp,1)} + A_{(lamp,2)} + A_{(lamp,3)} \cong 20{,}000\ mm^2 . \quad (27)$$

The result in Equation (27) shows that in order to achieve the high-beam performance (600 lm inside the beam pattern, and 50,000 cd in the hotspot), it takes 150% larger effective aperture when using LEDs that have equivalent total lumen output as a tungsten halogen bulb in aperture 8,000 mm^2.

Although there are several typical optical systems to form a headlamp beam pattern, either traditional or nontraditional optics, the size of the effective aperture is essential to ensure the desired photometry performance. The cases listed below show several approaches to used LEDs to obtain the tungsten halogen equivalent performance with the same size of aperture.

Case 1. Because the light source dimensions between tungsten halogen bulb (filament diameter) and LED emitter (chip size) are similar and the LED has half space emission, one simple solution to obtain the tungsten halogen low-beam (or high-beam) performance level is to increase the lumen output of the LEDs to 500 lm (or to 850 lm for high-beam) per emitter without changing the emitter size. Then 2 LEDs each use a half of the original lamp aperture. This will easily lead to a feasible solution of designing a headlamp low-beam (or high-beam) with same amount of lumen flux within beam pattern (420 lm for low-beam, 600 lm for high-beam), and same aperture size (12,000 mm^2 for low-beam, 8,000 mm^2 for high-beam).

SPERO EX. 2052

Downloaded from SAE International by Andrew Turner, Saturday, July 29, 2023

Case 2. Increase the lumen output to 150 lm for each LED for low-beam (or 250 lm for high-beam). This will allow the total of 10 LEDs for low-beam (or 14 for high-beam) to use the same size of the effective aperture as for tungsten halogen bulb. However, the total lumen used for the lamp now is 1,500 lm (for low-beam or 3,500 lm for high-beam) which lead to further reduction of the system efficiency.

Case 3, To overcome the aperture limitation, one approach is to use a shared aperture with multiple LEDs if the higher brightness LEDs are not available. If we assume that N_1 of LEDs is used to form the hotspot with the same sub-aperture, then,

$$\Phi_{(lamp,1)} = \eta N_1 L_s A_{(lamp,1)} \sum_i \Omega_{(lamp,1,LEDi)} \cdot \qquad (28)$$

Because of the limitation of the physical structure for both reflector or lens system, the combined solid angle from multiple number of LEDs is always larger then the original required angle $\Omega_{(lamp,1)}$, therefore additional loss is introduced when the light is diverged to outside of the desired angle.

$$\sum_i \Omega_{(lamp,1,LEDi)} > \Omega_{(lamp,1)} \cdot \qquad (29)$$

This analysis shows that additional loss will be introduced when sharing aperture. However without significant increasing LEDs' luminance or changing the LED emitter configuration, sharing aperture is the only approach that can make it potentially feasible to implement the current LEDs into headlamp design. Typically there are two ways of sharing aperture: (A) using several LEDs for one large aperture; or (B) letting some LEDs use portion of the aperture dedicated to another LED. Option (A) is limited by the physical package of each LED. Option (B) in general has more flexibility for rearranging the usage of each portion of the aperture.

As we mentioned earlier, the light divergence varies at the different portion of the reflector. For the headlamp design, the portion of the reflector with smaller divergence is commonly used to form the hotspot, where light collecting efficiency has less priority for these reflector areas. For the rest portion of the reflector, the divergence angle is too large to form the hotspot, the light reflected from those areas is used to form the rest part of the beam pattern, e.g., spread, foreground light, etc. Light collection efficiency in these areas is much more important. When sharing the aperture, the LEDs can be distributed so that some LEDs are predominantly used to form the hotspot by using the smaller divergence portion of the reflector, and the rest of the LEDs are designed with the optics that is more emphasis on the high collection efficiency.

Although the LED current application for headlamp design is limited, because of the flexibility of how to share aperture, it opens a great opportunity and challenge to optical engineers to develop the design concepts that are more efficient. Overall, our experiences have shown that with additional losses introduced by sharing aperture, more LEDs must be added to meet the headlamp beam pattern and total aperture needs. For instance, a headlamp package with approximately 15 LEDs each has 100 lm output (again, total of 1,500 lm input) may be able to meet both performance and aperture requirements of the low-beam discussed in the above. However, the total system efficiency is lower than tungsten halogen system. Also, it could use 10 LEDs each has 100 lm output (total of 1,000 lm input) to realize same performance for the low-beam, but in aperture would be 18,000 mm^2, the total system size is much larger than tungsten halogen system.

Tables 2A and 2B show the example of low-beam and high-beam headlamp design comparison.[2]

Table 2A Light source comparison for a low-beam headlamp

	Light Source Lumen Output	Beam Pattern Lumen	Lamp Aperture Size	System Efficiency
Tungsten Halogen	1,000 lm	420 lm	12,000 mm^2	42 %
LED 100 lm each	10 LEDs 1,000 lm	420 lm	18,000 mm^2	42%
LED 100 lm each	15 LEDs 1,500 lm	420 lm	12,000 mm^2	28%
LED 150 lm each	10 LEDs 1,500 lm	420 lm	12,000 mm^2	28%
LED 500 lm each	2 LEDs 1,000 lm	420 lm	12,000 mm^2	42%

Table 2B Light source comparison for a high-beam headlamp

	Light Source Lumen Output	Beam Pattern Lumen	Lamp Aperture Size	System Efficiency
Tungsten Halogen	1,700 lm	600 lm	8,000 mm^2	35 %
LED 100 lm each	17 LEDs 1,700 lm	600 lm	20,000 mm^2	35%
LED 250 lm each	14 LEDs 3,500 lm	600 lm	8,000 mm^2	17%
LED 850 lm each	2 LEDs 1,700 lm	600 lm	8,000 mm^2	35%

SPERO EX. 2052

Downloaded from SAE International by Andrew Turner, Saturday, July 29, 2023

The limitations or difficulties of using multiple LED to design headlamp may be summaries as two major parts: (A) as the total lamp aperture is being divided into several sub-apertures, the portion of the sub-apertures $A_{(lamp,i)}$ used for LEDs to project lights into hotspot zone with smaller spread angle $\Omega_{(lamp,i)}$ is small. As a result, there may not be enough light for hotspot; (B) the smaller sub-structure of the lamp has much smaller focal length comparing to tungsten halogen source, it then requires higher accuracy.

LIGHT SOURCE GEOMETRY – LED EMITTER ASPECT RATIO

Fig. 10 shows a prototype LED head lamp built with 30 lm flux output white LEDs each has chip size of 1 mm X 1 mm. The test results of iso-candela from the above prototype low-beam and high-beam are shown in Fig.11A and Fig. 11B.

In the design of the above prototype LED headlamp, because the plastic dome of the LED magnifies the chip image, each LED emitter then has effective size of 1.5 mm X 1.5 mm. As shown in the Fig. 11A & 11B, the hotpots intensity of both low-beam and high-beam pattern are not high enough to provide sufficient down-the-road light.

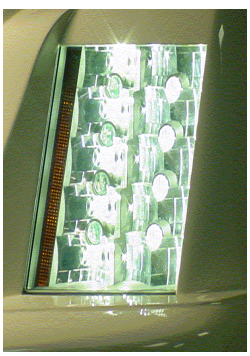

Fig.10 Prototype LED headlamp

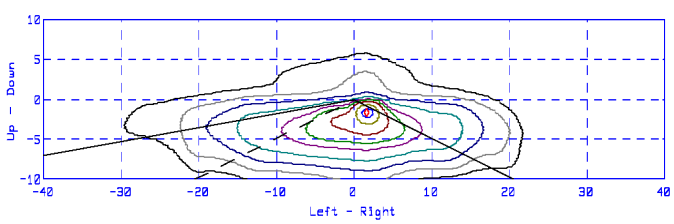

Fig.11A The iso-candela of low beam

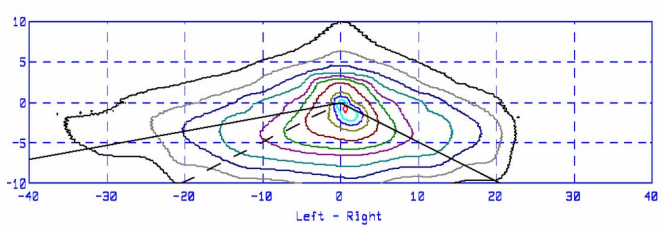

Fig.11B The iso-candela of high beam

To achieve a high performance headlamp beam pattern with the lamp size restriction, in addition to demanding higher LED luminance, the LED emitter geometry or the aspect ratio of the chip dimensions may also be optimized. Fig.12 shows the square shaped emitter images formed by a FFR, where a mapping strategy is used to form a hotspot with sufficient gradient (cutoff) for visual aiming.

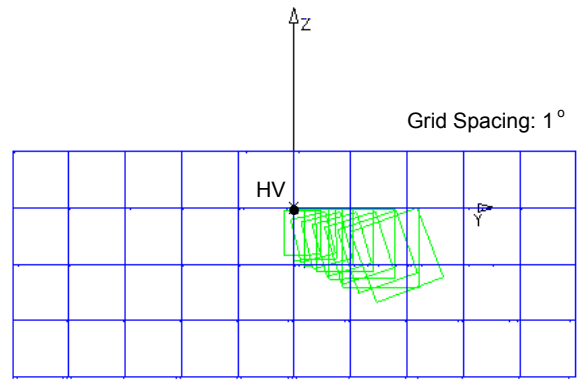

Fig.12 Square-shape LED emitter images

The headlamp low-beam hotspot zone is required to have larger horizontal spread angle (+/- 2° or more) than the vertical spread angle (+/- 1°). The square images of the LED emitters form by the FFR need to be arranged to compensate the hotspot shape requirement. If an LED emitter is shaped as a rectangle instead of square, the emitter images can more overlapped in the hotspot zone.

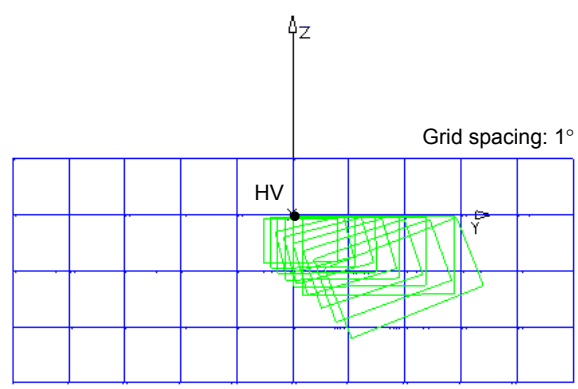

Fig.13 LED emitter Images with aspect ratio of 2:1

Fig.13 shows the images of emitter size of 3.0 mm X 1.5 mm. A desired low-beam hotspot horizontal spread angle, i.e., the preferred cutoff line width for visual aiming is at least 3 degrees.

It is worth to mention that the larger size of the LED chips should not decrease their luminance. One option for choosing the aspect ratio of the LED chips is to compare the tungsten halogen filament size. A typical aspect ratio for the low-beam bulb is around 4. The

SPERO EX. 2052

Downloaded from SAE International by Andrew Turner, Saturday, July 29, 2023

filament images formed with an FFR are shown in Fig.14. When designing the low-beam headlamp using tungsten halogen bulb with FFR, the filament is in an axial orientation along the optical axis of the FFR. With such arrangement, it is quite natural to form the desired hotspot horizontal angular spread. Regardless what aspect ratio or shape of the LED chip could be, it is important to realize that one of the chip demission must be small, or comparable to the size of the tungsten halogen filament diameter unless the LED emitter has extremely high luminance. It is again, due the etendue invariance of the lamp system, the overall etendue value of an optical system cannot be compressed.

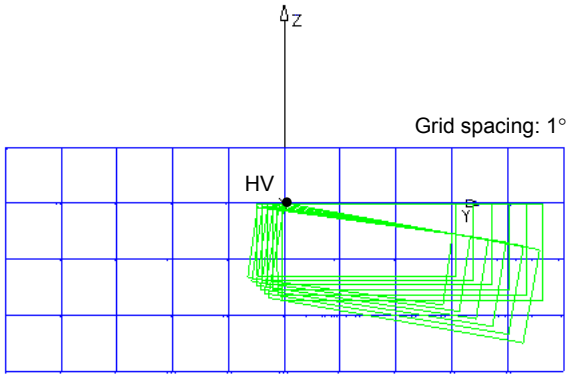

Fig.14 Tungsten halogen filament images

CONCLUSION

Based on the analysis and hardware test results, it is understood that the limitations of using an LED light source to design headlamp are based on two principles of non-imaging optical system: (A) the system cannot change (increase) the luminance of the light source used. (B) Etendue value of the output from the system is always equal or larger than the input value. Because of these principles, for the photometry requirements of the headlamp beam pattern and the design restriction for the system aperture, the luminance of LEDs must be comparable to or higher than the existing tungsten halogen light sources.

Comparing to filament-like light sources, some disadvantages exist when using multiple discrete (non-elongated as a filament) light sources such as LEDs to design automotive headlamps. First, when the lamp aperture is divided into several sub-structures, each sub-structure may require smaller focal length. As the consequence, the associated optical accuracy or tolerances is increased. This may lead to addition reduction for the system efficiency. Second, because the headlamp beam patterns are highly non-isotropic, the vertical spread angle is very narrow; the horizontal spread angle is rather large. This asymmetric beam pattern can be rather easily achieved with tungsten halogen filament with axial orientation in an FFR system. However because the current LED emitters are square shape, the associated optical system must introduce a horizontal spread to form a hotspot or other parts of the beam pattern, which leads to less overall light concentration. Therefore, comparing to the elongate light source with higher aspect ratio, square shape emitter LEDs may be less spread of hot spots to be used in the FFR type headlamp.

To achieve tungsten halogen or high intensity discharge source equivalent headlamp performance without increase lamp aperture or package size, LED source must provide luminance comparable to these sources. In addition, the geometry of LED chip should be optimized so that it can be more efficiently used.

ACKNOWLEDGEMENT

Authors highly recognize and appreciate the contributions made from Takayuki Iwaki and Brian Wells towards the design concepts and hardware built.

REFERENCES

[1] W.T. Welford, R. Winston, *High Collection Nonimaging Optics*, Academic Press, New York, 1989

[2] Jianzhong Jiao and Ben Wang, “Etendue Concern for Automotive Headlamp Using LEDs”, SPIE The Third International Conference on Solid State Lighting, San Diego, CA, Oct. 2003

[3] P. Albou, *LED Module for Headlamp*, Lighting Technology SAE SP-1787 pp65-70, 2003

[4] H.A.E. Keitz, *Light Calculation and Measurements*, Macmillan and Co Ltd., Netherlands, 1971

[5] W. Falicoff, *Optical Design Consideration for LED Automotive Lighting*, Strategies in Light, San Mateo, CA, Feb. 2003

[6] D. Pelka, *Novel Optical Architectures Workshop*, Strategies in Light, San Mateo, CA, Feb. 2002

[7] Luxeon Star Power Light Source, *Technical data*, Lumileds’ Publication, 2003

SPERO EX. 2052