United States Patent [19]

Ueda

[11] **Patent Number: 4,587,393**

[45] **Date of Patent: May 6, 1986**

[54] **HEATING APPARATUS HAVING A SENSOR FOR TERMINATING OPERATION**

[75] Inventor: **Shigeki Ueda**, Kouriyama, Japan

[73] Assignee: **Matsushita Electric Industrial Co., Ltd.**, Osaka, Japan

[21] Appl. No.: **687,271**

[22] Filed: **Dec. 28, 1984**

[30] **Foreign Application Priority Data**

Jan. 5, 1984	[JP]	Japan	59-416
Mar. 12, 1984	[JP]	Japan	59-47418
Jun. 8, 1984	[JP]	Japan	59-118444

[51] **Int. Cl.**[4] **H05B 6/68**

[52] **U.S. Cl.** ..... **219/10.55 B**; 219/10.55 M; 219/10.55 R; 99/325; 99/DIG. 14; 99/451; 426/243; 426/523

[58] **Field of Search** ..... 219/10.55 B, 10.55 R, 219/10.55 E, 10.55 F, 482, 490, 10.55 M; 99/325, DIG. 14, 451; 426/241, 243, 234, 523

[56] **References Cited**

U.S. PATENT DOCUMENTS

3,839,616	10/1974	Risman	219/10.55 R
4,162,381	7/1979	Buck	219/10.55 B
4,311,895	1/1982	Tanabe	219/10.55 B
4,335,293	6/1982	Kobayashi et al.	219/10.55 B

FOREIGN PATENT DOCUMENTS

52-13150	2/1977	Japan	219/10.55 R

Primary Examiner—Philip H. Leung

Attorney, Agent, or Firm—Lowe, King, Price & Becker

[57] **ABSTRACT**

Foodstuff is heated in a chamber ventilated by a fan through an exhaust duct. The duct has a sufficiently long airflow passage to produce a substantially laminar flow therein. An opening at an intermediate position along the duct length faces in a direction substantially perpendicular to the direction of the laminar airflow. The opening is closed by an enclosure so vaporized substance emitted by the foodstuff diffuses from the duct through the opening into the enclosure. A sensor in the enclosure detects the diffusing substance and develops a signal indicating a condition of the foodstuff.

19 Claims, 8 Drawing Figures

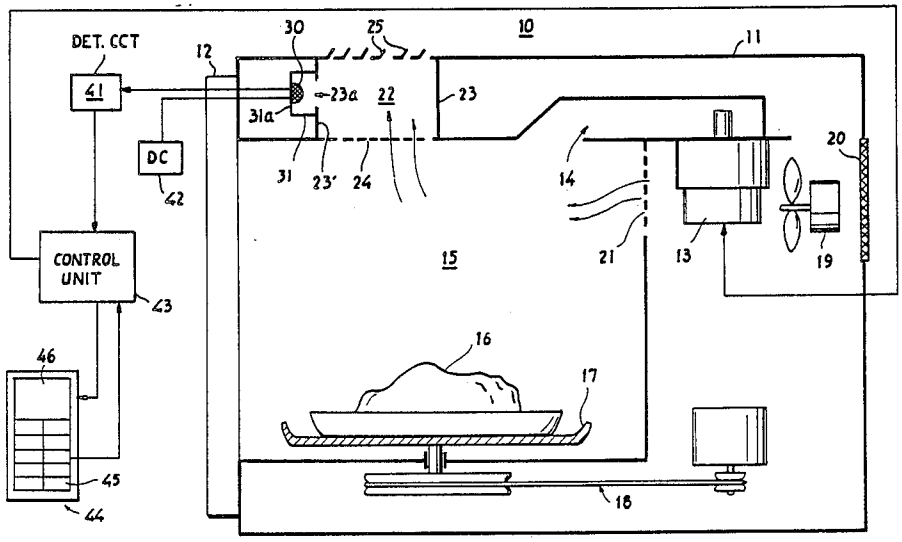

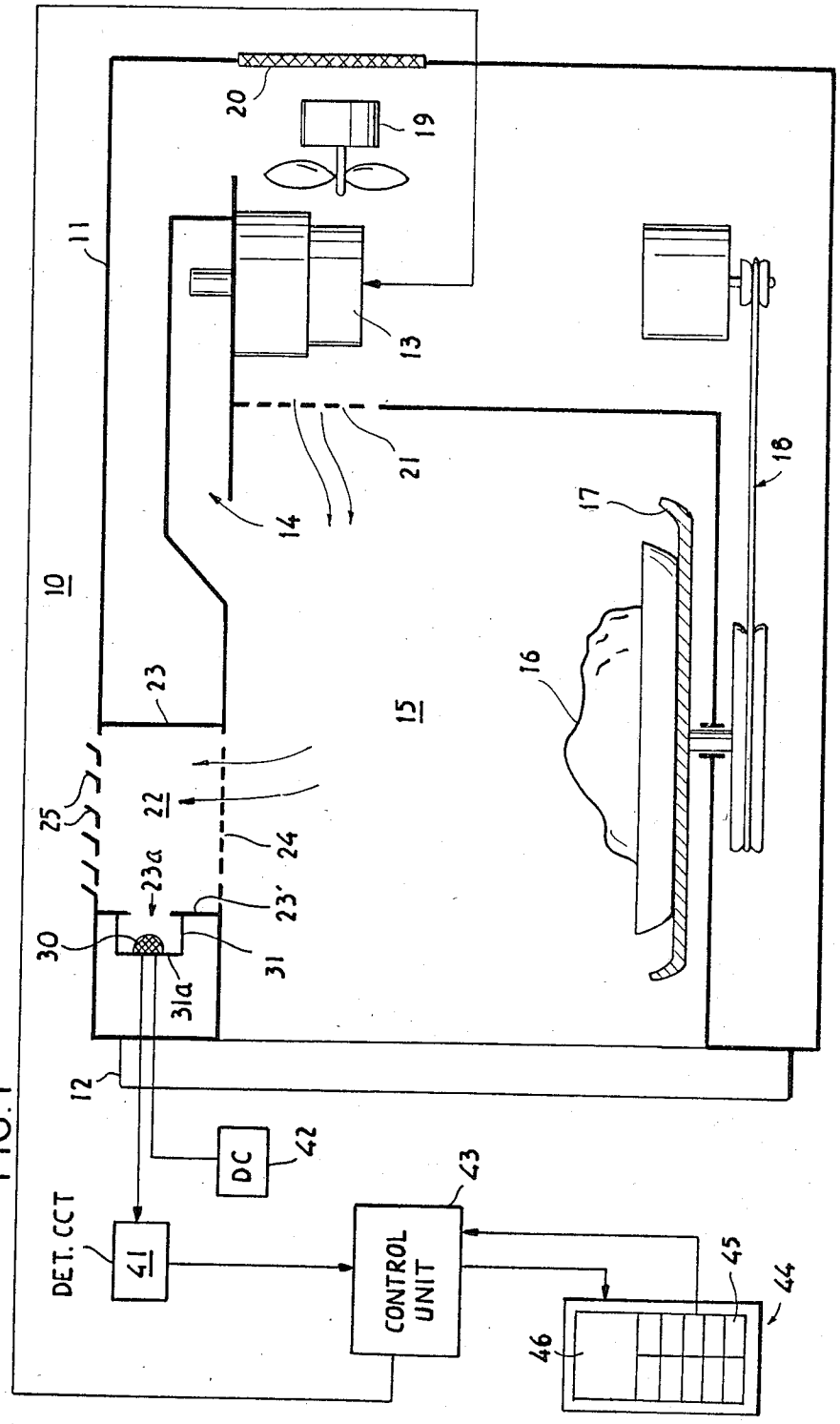
10
11
12
13
14
15
16
17
18
19
20
21
22
23
23a
23'
24
25
30
31
31a
DC
42
DET. CCT
41
CONTROL UNIT
43
44
45
46

FIG. 1

FIG. 2

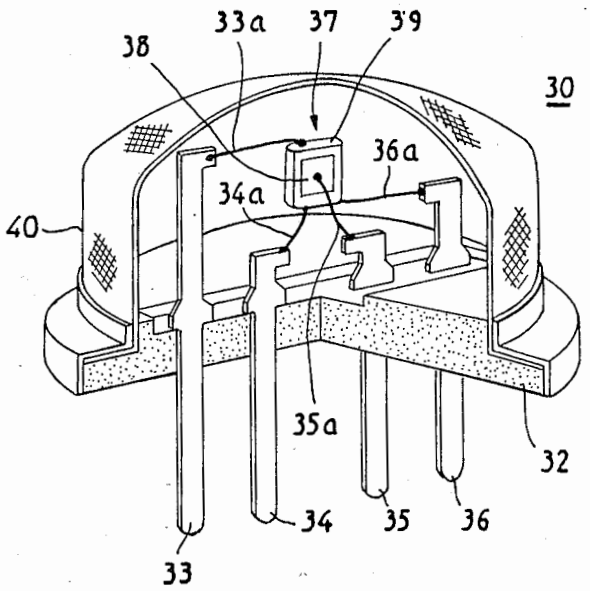
33a
37
39
38
30
36a
34a
40
35a
32
34
35
36
33

FIG. 3

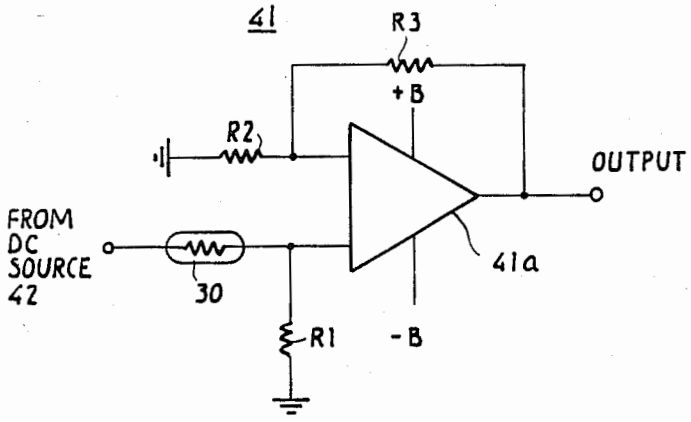
41
R3
+B
R2
OUTPUT
FROM
DC
SOURCE
42
30
41a
R1
-B

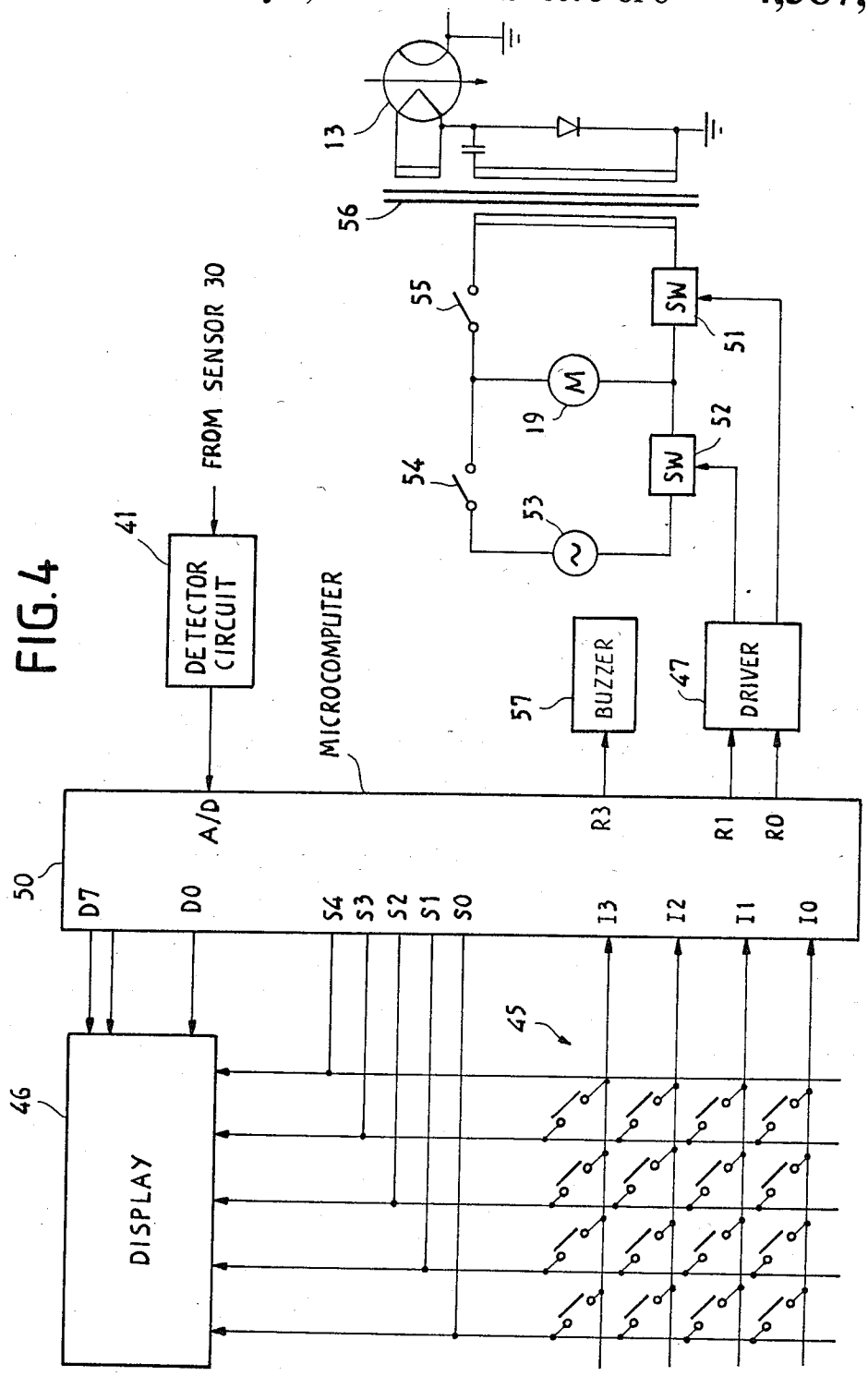
FIG. 4
FROM SENSOR 30
DETECTOR CIRCUIT
41
MICROCOMPUTER
50
D7
D0
A/D
S4
S3
S2
S1
S0
R3
R1
R0
I3
I2
I1
I0
DISPLAY
46
45
BUZZER
57
DRIVER
47
SW
51
SW
52
M
19
53
54
55
56
13

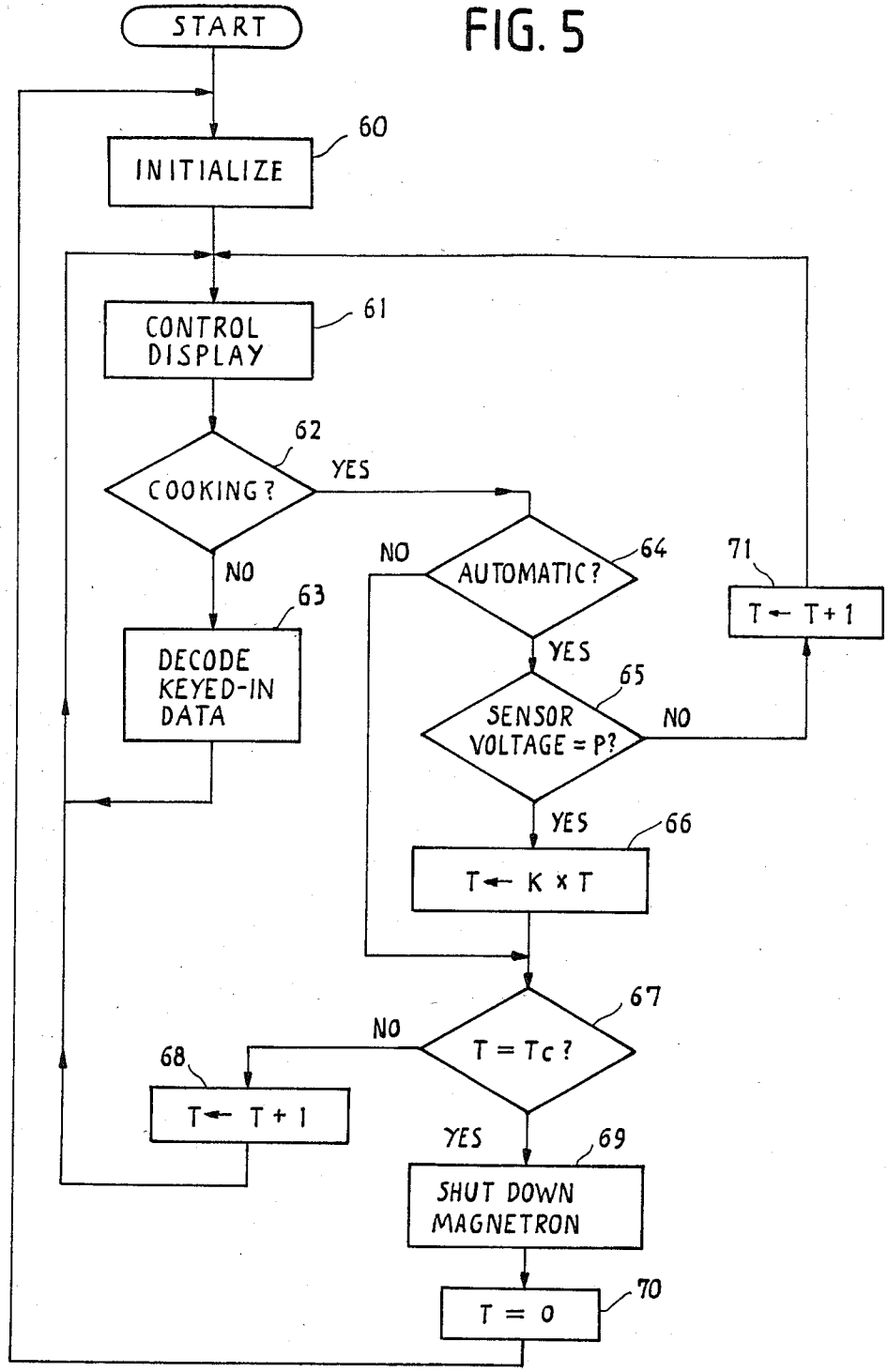
FIG. 5
START
INITIALIZE
60
CONTROL DISPLAY
61
COOKING?
62
YES
NO
DECODE KEYED-IN DATA
63
AUTOMATIC?
64
NO
YES
SENSOR VOLTAGE = P?
65
NO
YES
T ← T + 1
71
T ← K x T
66
T = Tc?
67
NO
YES
T ← T + 1
68
SHUT DOWN MAGNETRON
69
T = 0
70

FIG. 6

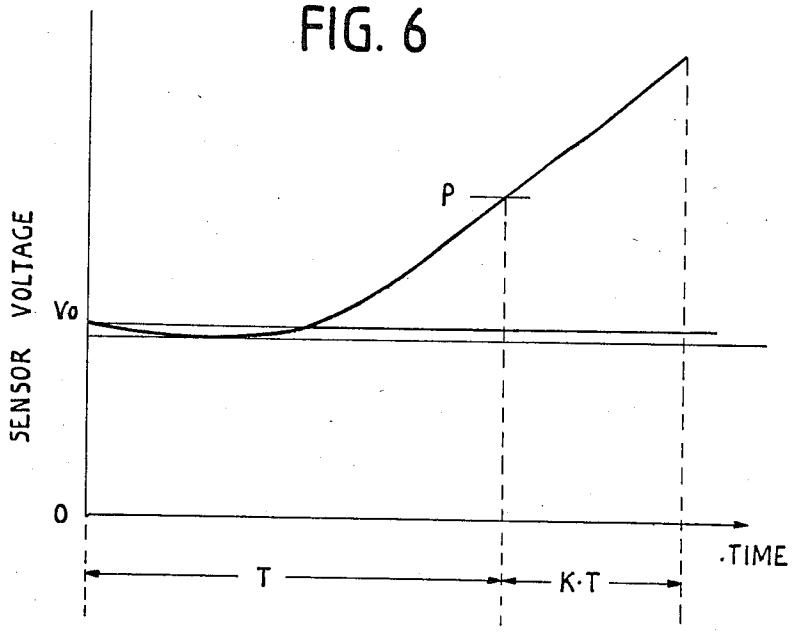
SENSOR VOLTAGE
Vo
0
P
TIME
T
K·T

FIG. 7

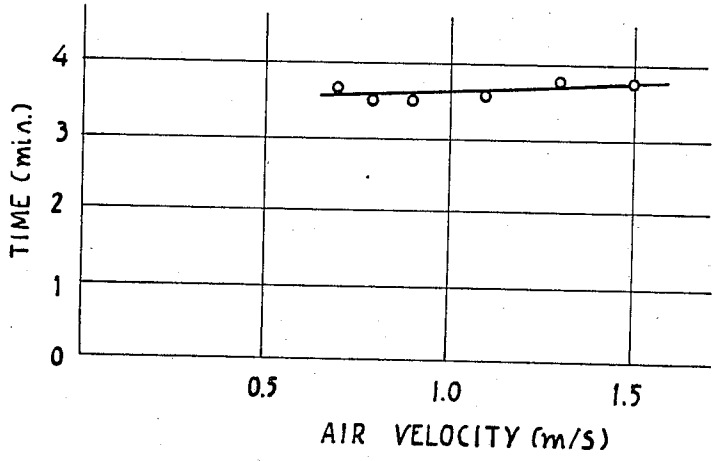
TIME (min.)
4
3
2
1
0
0.5
1.0
1.5
AIR VELOCITY (m/s)

FIG. 8

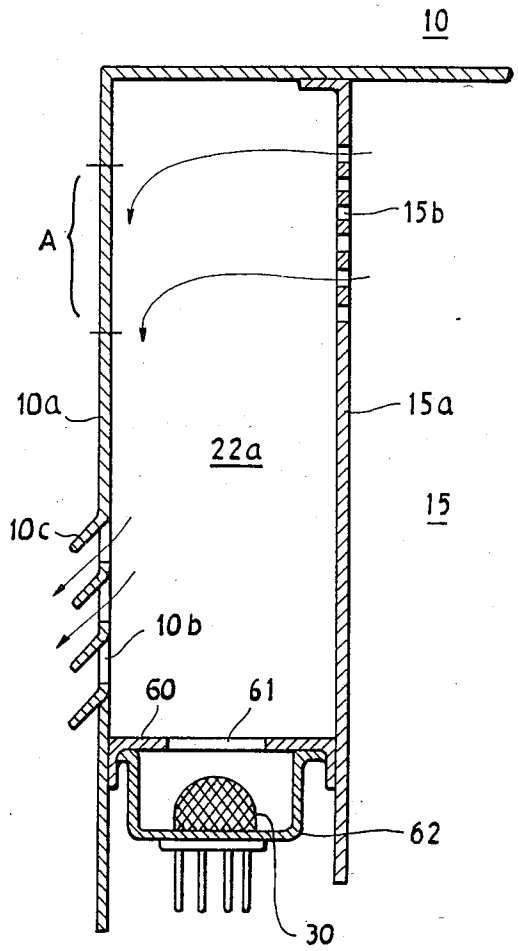

HEATING APPARATUS HAVING A SENSOR FOR TERMINATING OPERATION

BACKGROUND OF THE INVENTION

In a heating apparatus, particularly a microwave oven, it is desired to automatically terminate cooking operation when foodstuff has been appropriately cooked. It has been proposed to provide a humidity/gas sensor in the path of air exhausted from the ventilated heating chamber to detect a gaseous substance emitted by foodstuff being cooked as a indication of the condition of the foodstuff. However, difficulty has been encountered to provide an accurate indication of the condition of the heated material.

SUMMARY OF THE INVENTION

It is therefore an object of the present invention to provide a heating apparatus having structure for precisely determining the condition of a material being heated.

The present invention is based on the discovery that the velocity of exhausted air adversely affects the detection of emitted gaseous substance.

According to the present invention, the heating apparatus comprises a chamber in which a material to be heated is placed and a heater for heating the material to cause it to emit a substance in a gaseous state. A fan directs air into the chamber and through an exhaust duct to the outside. The duct has a passage of sufficient length between an inlet and an outlet thereof to produce a laminar airflow therein. An opening is formed in an intermediate position along the length of the duct; the opening allows gas to escape from the duct in a direction substantially perpendicular to the direction of the laminar airflow. An enclosure outside of the opening collects gas diffusing from the duct through the opening. A sensor located in the enclosure detects the diffusing substance to de-energize the heater when the sensor develops a voltage indicating a predetermined condition of the heated material.

BRIEF DESCRIPTION OF THE DRAWINGS

The present invention will be described in further detail when reference to the accompanying drawings, in which:

FIG. **1** is an illustration of a microwave oven with a control unit therefor;

FIG. **2** is a perspective view of a humidity sensor employed in the present invention;

FIG. **3** is a circuit diagram of a detector for amplifying the output of the humidity sensor;

FIG. **4** is a block diagram of the control unit of FIG. **1**;

FIG. **5** is a flow diagram of programmed functions performed by the microcomputer of FIG. **4**;

FIG. **6** is a plot of sensor output voltage as a function of time;

FIG. **7** is a graphic illustration of the result of an experiment showing a plot of time taken to reach a predetermined voltage level as a function of varying exhaust air velocity; and

FIG. **8** is a cross-sectional view of a second embodiment of the invention.

DETAILED DESCRIPTION OF THE DRAWINGS

Referring now to FIG. **1**, there is shown a microwave oven **10** comprising a housing **11** with a hinged door **12**. Magnetron **13** is mounted in a position adjacent an energy radiating duct **14** through which microwave energy is radiated into a heating chamber **15** in which foodstuff **16** is placed on a rotating disc **17** driven by a belt-drive system **18**. Outside air is drawn by a fan **19** through a filter **20** into the housing **10** to cool the magnetron **13**, thence into the cooking chamber **15** through inlet openings **21** provided on a side wall of the chamber. The air inside the chamber **15** is exhausted through a duct **22** defined by side walls **23**, a bottom wall having perforations **24** and a top wall having slits with a series of overlapping slats **25**. The size of perforations **24** and the slits is such that microwave energy does not leak out of duct **22** while permitting a sufficient amount of smoke to escape through them. The side walls **23** have a sufficient vertical length to produce an upward draft of laminar airflow. The heated foodstuff produces water vapor and gas, which are exhausted through duct **22**.

A side wall **23'** of the duct **22** is formed with an opening **23*a*** which is closed by an enclosure **31** on the outside duct **22**. A humidity/gas sensor **30** is mounted on a vertical wall **31*a*** of enclosure **31** opposite from opening **23*a***. Because humidity/gas sensor **30** is located away from the path of the bulk of exhausted moisture-laden laminar airflow, the sensor responds only to the diffusing water vapor or gas; the vapor or gas diffuses at a speed proportional to the gradient of vapor/gas concentration between duct **22** and enclosure **31**.

In one embodiment, sensor **30** is of a type which allows detection of absolute humidity. FIG. **2** is an illustration of a typical example of such humidity sensors. The sensor comprises a ceramic base **32**, pins **33–36** mounted on base **32**, and a sensor chip **37** supported by lead wires **33*a*–36*a***. Chip **37** comprises an inner humidity sensing part **38** which is connected by leads **35*a*, 36*a*** and pins **35, 36** to a detector circuit **41** and an outer heating part **39** which is connected by leads **33*a*, 34*a*** and pins **33, 34** to a DC voltage source **42**. The sensing part of chip **37** is a mixture of MgO and ZrO_2 and is heated by the outer heating part **39** so that the sensor part resistance varies in response to the absolute humidity of its environment. A metal net cover **40** is provided over the base **32** to protect the sensor chip **37**. This cover **40** has an advantageous effect of keeping the sensing part warm by containing heated air inside the net. The humidity sensor shown in FIG. **2** is available under the tradename "Neohumiceram" from Matsushita Electric Industrial Company. A further suitable sensor is of a gas sensor composed of SnO_2 which is available from Figaro Engineering Inc. (Japan).

FIG. **3** is circuit diagram of a preferred form of the detector circuit **41** comprising an operational amplifier **41*a***. The humidity sensor **38** is connected to ground by shunt resistor R_1, having a resistance less than 1/10 of the nominal resistance value of the humidity sensor **38**. The junction between sensor **38** and resistor R_1 is connected to a first input of operational amplifier **41*a***. The amplification gain of operational amplifier **41*a*** is determined by the ratio R_3/R_2 of resistors R_3 and R_2 which are connected in series from the output of amplifier **41*a*** to ground with a junction therebetween being connected to the second input of the amplifier. In a typical

example, the nominal value of sensor **38** is 900 kilohms at 20° C. and an absolute humidity of 60%. Therefore, an appropriate value of resistor R_1 is in the range between several kilohms to several tens of kilohms. Due to the 1:10 resistance ratio, the detector circuit **41** provides a voltage output which varies substantially linearly as a function of current flowing through the humidity sensor.

Returning to FIG. **1**, the apparatus further includes a control unit **43** and a data-entry/display panel **44** having a plurality of keys **45** and a liquid-crystal display **46**. Control unit receives data from the data-entry/display panel **44** to initiate a cooking operation according to the contents of input data by energizing magnetron **13** via a driver **47** and further receives an output signal from detector circuit **41** to terminate the cooking operation.

FIG. **4** is a detailed circuit diagram of the structure of the control unit **43**. Input data entered by select keys **45** are applied to terminals I_0–I_3 of a microcomputer **50** which decodes the input data into a series of eight-segment codes which are applied through terminals D0–D7 to display **46** and a series of digit codes applied thereto through terminals S0–S4. The eight-segment digits of the display **46** are dynamically driven on a time-shared basis in order to reduce the number of connecting leads. The output of detector circuit **41** is applied to an analog-to-digital conversion terminal A/D of the microcomputer where the analog value of resistance variation that occurs in the humidity sensor is converted to a corresponding digital code. Driver **47** is connected to output terminals R_0, R_1 to amplify power turn-on control pulse from terminal R_1 and power-level control pulses from terminal R0 and respectively, applies them to series connected switching elements **51** and **52**, responsive to AC power source **53**; switches **51** and **52** are also in series with door switches **54**, **55** and a primary winding of a transformer **56**. Switching element **31** completes a circuit for the fan motor **19** and a circuit for the primary winding of the transformer **56**, having a secondary winding connected to the cathode of magnetron **13**. By varying the duty cycle or frequency of the pulses applied to switching element **31**, the power level of the magnetron is controlled. A buzzer **57** is also provided to sound an alarm when cooking operation is terminated in an automatic mode.

FIG. **5** is a flow diagram for the operation of the microcomputer. Computer operation beings initialization step **60** which calls block **61** during which the microcomputer drives the display **46** on a time-shared basis. Decision block **62** follows to check to see if a cooking operation is in progress, and if not, control advances to block **63** to scan the input terminals I0 and I3 to read and decode the input data as described above to put them on display and control returns to block **61**. If a cooking operation is in progress, control exits to decision block **64** to check to see if the input data indicate that the operation is in automatic mode and if not, control exits to block **67** to compare a time count value T with a time period Tc which has been entered manually through the data-entry panel **45**. Block **68** follows if the set time Tc has not lapsed to increment timer count T by one. Control then returns to block **61** to successively increment the count T until it reaches Tc in block **67**, whereupon block **69** follows to shut down magnetron **13** and alert the user by operating buzzer **57**. Timer count T is reset to zero in block **70** and control returns to initialization block **60**.

If the operation is in automatic mode, block **65** is executed by comparing the digitized value of absolute humidity with a predetermined value P. If the latter has not been reached, block **71** is repeatedly executed by incrementing the timer count T by one until the humidity value P is reached in block **65**, whereupon control advances to block **66** to multiply the timer count value T by a constant K (which ranges from zero to 3 depending on the material of the foodstuff being cooked). Timer count value T which is obtained by block **71** is compared with a set value Tc which, in the automatic mode, is determined by the material of the foodstuff dictated by the input data. Blocks **67** and **68** are executed repeatedly until $K \times T$ becomes equal to Tc. Blocks **69** and **70** follow to shut down magnetron **13**, operate buzzer **57** and reset timer count T to zero and allow control to return to block **60**.

FIG. **6** is a plot of the output of sensor **30** as a function of time. The output voltage Vo initially remains substantially constant, then rises sharply passing the predetermined humidity value P whereupon the microcomputer determines the time T taken to reach that point and further determines the time $K \times T$ to continue the cooking operation. If the humidity sensor **30** were affected by the exhausted airflow, the voltage curve would drop significantly and take longer to reach the threshold P, which results in a foodstuff being overheated. FIG. **7** is a plot of time periods taken to reach the threshold P for a given foodstuff as a function of the velocity of air exhausted through duct **22** which is varied experimentally by controlling the fan **19**. As is evident, the time taken to reach that threshold remains substantially constant despite the varying flowrate. The present invention thus provides a cooking apparatus which terminates cooking operation at correct timing.

FIG. **8** is an illustration of a second embodiment of the present invention. In this embodiment, exhaust duct ***22a*** is provided on a side wall ***15a*** of cooking chamber **15** and defined between it and a side wall ***10a*** of housing **10**. Perforations ***15b*** are provided on side wall ***15a*** adjacent the upper end of duct ***22a*** to admit air from chamber **15** and slits ***10b***. A series of louver boards ***10c*** are formed on side wall ***10a*** adjacent the lower end of duct ***22a*** to exhaust the air to the outside. The lower end of duct ***22a*** terminates with a wall member **60** having an opening **61**. An enclosure **62** is secured to wall member **60** to accommodate the sensor **30** therein. Duct ***22a*** has a longer vertical dimension than its horizontal dimension so that the air admitted through perforations ***15b*** strikes an upper portion A of side wall ***10a***, is deflected downwardly, and cooks as it descends. The admitted air turns gradually as it passes through slits ***10b*** and is guided by downwardly extending louver boards ***10c***. As the air hits the wall portion A, grease or oily components carried by the exhaust air sticks to that wall portion and the grease-free air moves past the sensor **30**. The surface of sensor **30** is thus kept free from the greasy material and remains responsive at a constant sensitivity to water vapor or gas. Due to the cooling effect of the vertically extended duct ***22a*** the sensor **30** is protected from the otherwise high temperatur water vapor or gas. For this reason, this embodiment is particularly advantageous for a microwave oven of the type having a resistance heater mounted on the top wall of the cooking chamber to produce a browning effect on the surface of foodstuff.

The foregoing description shows only preferred embodiments of the present invention. Various modifica-

tions are apparent to those skilled in the art without departing from the scope of the present invention which is only limited by the appended claims. Therefore, the embodiments shown and described are only illustrative, not restrictive.

What is claimed is:

1. A heating apparatus comprising:
a chamber in which a material to be heated is placed;
means for heating said material to cause it to emit a gaseous substance;
fan means for directing air into said chamber;
duct means connected to said chamber for exhausting the air directed into the chamber to outside of the chamber, the duct means having a sufficiently long airflow passage between an inlet and an outlet thereof so the air exhausted through it has substantially laminar flow therein, the duct means having an opening on a side wall positioned to be responsive to a diffusing portion of the laminar flow;
enclosure means, the opening being closed by said enclosure means, the opening and enclosure means being arranged so said substance diffuses from said duct means through said opening into the enclosure means,
sensor means in said enclosure means for detecting said diffusing substance; and
means responsive to said sensor means for de-energizing said heating means.

2. A heating apparatus as claimed in claim 1, wherein the inlet of said duct means is located on one side wall of, and at one end of, said duct means to cause the exhausted air to strike a portion of an other side wall of said duct means, said another side wall being opposite to said inlet.

3. A heating apparatus as claimed in claim 2, wherein said duct means extends vertically, the inlet of said duct means being located at a higher position than the outlet of said duct means and said sensor means being located at a lowermost position of said duct means.

4. A heating apparatus as claimed in claim 1, wherein said sensor means comprises an absolute humidity sensor.

5. A heating apparatus as claimed in claim 4, wherein said sensor means comprises a sensing part and a heating part for heating the sensing part into an active state.

6. A heating apparatus as claimed in claim 5, wherein said sensing part has a predetermined resistance value, further comprising a detector circuit which comprises:
a resistor having a resistance value smaller than said predetermined resistance value and connected with said sensing part in a series circuit from a voltage source to a reference potential; and
amplifier means for amplifying a voltage developed at a junction between said resistor and said sensing part.

7. The heating apparatus of claim 1 wherein the duct has a vertically extending longitudinal axis along which the laminar flow between the inlet and outlet is induced, the inlet and outlet being horizontally disposed, the opening being in line with the longitudinal axis and downstream of the outlet so the diffuse flow through the opening is generally in the vertical direction.

8. The heating apparatus of claim 1 wherein the inlet and outlet are generally aligned and horizontally disposed so the laminar flow is induced in a vertical direction between them, the opening being vertically disposed so the diffuse flow through it is generally in the horizontal direction.

9. A cooking apparatus comprising:
a chamber in which a foodstuff is placed;
a microwave energy generating means for heating said foodstuff to cause it to emit a gaseous substance;
fan means for directing air into said chamber;
duct means connected to said chamber for exhausting the air directed into the chamber to outside of the chamber, the duct means having a sufficiently long airflow passage between an inlet and an outlet thereof so the air exhausted through it has substantially laminar flow therein, the duct means having an opening on a side wall positioned to be responsive to a diffusing portion of the laminar flow;
enclosure means, the opening being closed by said enclosure means, the opening and enclosure means being arranged so said substance diffuses from said duct means through said opening into the enclosure means;
sensor means in said enclosure means for detecting said diffusing substance; and
control means responsive to said sensor means for de-energizing said heating means.

10. A heating apparatus as claimed in claim 9, wherein the inlet of said duct means is located on one side wall of, and at one end of, said duct means to cause the exhausted air to strike a portion of an other side wall of said duct means, said another side wall being opposite to said inlet.

11. A cooking apparatus as claimed in claim 10, wherein said duct means vertically extends, the inlet of said duct means being located at a higher position than the outlet of said duct means and said sensor means being located at a lowermost position of said duct means.

12. A cooking apparatus as claimed in claim 9, wherein said sensor means comprises an absolute humidity sensor.

13. A cooking apparatus as claimed in claim 12, wherein said sensor means comprises a sensing part and a heating part for heating the sensing part into an active state.

14. A cooking apparatus as claimed in claim 13, wherein said sensing part has a predetermined resistance value, further comprising a detector circuit which comprises:
a resistor having a resistance value smaller than said predetermined resistance value and connected with said sensing part in a series circuit from a voltage source to a reference potential; and
amplifier means for amplifying a voltage developed at a junction between said resistor and said sensing part.

15. A cooking apparatus as claimed in claim 14, wherein said control means comprises means for comparing the output of said amplifying means with a predetermined value, detecting the time taken to reach said predetermined value, multiplying the detected time by a factor which is variable depending on the material of said foodstuff, and de-energizing said microwave energy generating means at the end of said multiplied time.

16. A cooking apparatus as claimed in claim 9, wherein the inlet of said duct means has a plurality of perforations each being dimensioned to prevent said microwave energy from leaking to the outside of said duct means.

17. In a method of determining the extent to which foodstuff being heated by microwave energy in a microwave oven has been cooked, the foodstuff as it is being cooked by the microwave energy emitting vapor that mixes with air in the oven to form a vapor-air mixture, comprising the steps of:

inducing a laminar flow of the mixture in a duct,

inducing a diffuse flow of a portion of the mixture having laminar flow in the duct, and

detecting the absolute humidity of the portion of the mixture having the diffuse flow.

18. The method of claim 17 wherein the diffuse flow is induced from the mixture having laminar flow through an opening in the duct between an inlet and outlet of the duct.

19. The method of claim 17 wherein the diffuse flow is induced from the mixture having laminar flow through an opening in the duct downstream of an outlet of the duct.

* * * * *