-

UNITED STATES PATENT AND TRADEMARK OFFICE

_____

BEFORE THE PATENT TRIAL AND APPEAL BOARD

_____

COLLEGE PRODUCTS, INC.
Petitioner,

v.

INTIRION CORPORATION
Patent Owner

_____

Case IPR2023-_____
Patent No. 9,791,206

_____

PETITION FOR INTER PARTES REVIEW

Intirion Corporation Exhibit 2014
College Products, Inc. v. Intirion Corporation
IPR 2023-01042

Table of Contents

I. MANDATORY NOTICES (37 C.F.R. §42.8) 1
A. Real Parties-in-Interest (37 C.F.R. §42.8(b)(1)) 1
B. Related Matters (37 C.F.R. §42.8(b)(2)) 1
C. Lead and Backup Counsel (37 C.F.R. §42.8(b)(3)) 2
D. Service Information (37 C.F.R. §42.8(b)(4)) 2
E. Payment of Fees (37 C.F.R. §42.103) 2
II. COMPLIANCE WITH REQUIREMENTS FOR INTER PARTES PETITION PURSUANT TO 37 C.F.R. §§42.101 & 42.104(A) 3
III. SUMMARY OF THE ARGUMENT 8
IV. U.S. PATENT NO. 9,791,206 9
A. Effective Filing Date is No Earlier than April 25, 2014 9
B. Specification 11
C. Prosecution History 13
D. The Claims 15
V. CHALLENGE AND RELIEF REQUESTED (37 C.F.R. §42.104(B)) 16
A. Challenged Claims, Specific Art, and Statutory Grounds (§42.104(b)(1), (b)(2)) 16
B. Claim Construction (§42.104(b)(3)) 16
1. "Enable" 17
2. "Dangerous Condition" 19
C. Unpatentability (§42.104(b)(4)) 19
D. Supporting Evidence (§42.104(b)(5)) 19
VI. THE CHALLENGED CLAIMS ARE UNPATENTABLE 20
A. The Level of Ordinary Skill in the Art 20
B. The Scope and Content of the Prior Art 20
1. The Prior Art is Analogous 20
2. The Prior Art References 21
C. Differences Between the Claimed Subject Matter and the Prior Art 33

1. The Prior Art References Teach All Elements of the Challenged Claims. 33
2. Explanation of Asserted Grounds and Rationales Supporting a Conclusion of Obviousness 74
D. Objective Indicia of Nonobviousness do not weigh in favor of Patentability 92
VII. CONCLUSION 92

EXHIBIT LIST

Exhibit No.	Description
1001	U.S. Patent No. 9,791,206
1002	Expert Declaration
1003	Prosecution File History, U.S. Patent No. 9,791,206
1004	Original Intirion Complaint Filed on June 8, 2022.
1005	College Products Motion to Dismiss for Improper Venue filed on September 27, 2022.
1006	Order Transferring case to Iowa filed on April 10, 2023.
1007	Email Admitting that Petitioner has Compulsory Counter claims dated May 3, 2022.
1008	U.S. Application No. 14/262,290 ("the '290 Application"), published as U.S. Publication 2014/0251982.
1009	Exemplary embodiment Claim chart 9 sent by Intirion
1010	Email where Patent Owner construes certain terms
1011	U.S. Application No. 12/317,632 ("the '632 Application") published as U.S Publication U.S. Pub. 2009/0188911 ("Emma")
1012	"ISDU: Integrated Smoke detector Unit for Commercial Microwave Ovens", Cory Lloyd *et. al*, Northeastern University (2007). ("ISDU")
1013	U.S. Patent No. 4,587,393 to Ueda ("Ueda")
1014	U.S. Patent No. 4,496,817 to Smith ("Smith")
1015	U.S. Patent No. 8,446,048 to Butt ("Butt")
1016	Redline Comparison between 290 and Emma

Exhibit No.	Description
1017	Iowa DJ Complaint
1018	Consolidation Order
1019	Summons return of service, dated June 8, 2022

College Products, Inc. ("College Products" or "Petitioner") respectfully requests *Inter Partes* Review of claims 9, 10, 11 and 12 ("Challenged Claims") of U.S. Patent No. 9,791,206 ("the '206 Patent") pursuant to 35 U.S.C. §311 and 37 C.F.R. §42.100.

I. MANDATORY NOTICES (37 C.F.R. §42.8)

A. Real Parties-in-Interest (37 C.F.R. §42.8(b)(1))

College Products is the real party-in-interest for this proceeding.

B. Related Matters (37 C.F.R. §42.8(b)(2))

Petitioner is aware of the following judicial or administrative matters that would affect, or be affected by, a decision pending in this proceeding:

- *College Products, Inc. v. Intirion Corporation*, 5:23-cv-04002-KEM (N.D. Iowa) ("Iowa DJ Case");
- *Intirion Corporation v. College Products, Inc.*, 5:23-cv-04023-KEM (N.D. Iowa) ("Iowa Transfer Case").

Concurrently with this Petition, Petitioner has also filed petitions for IPR for U.S. Patents 10,495,374, and 11,274,876, which are related to the '206 Patent. For efficiency, Petitioner requests the three related IPR petitions be consolidated into one proceeding.[1]

[1] A single expert declaration is provided for all three petitions because of the substantial overlap.

C. Lead and Backup Counsel (37 C.F.R. §42.8(b)(3))

Lead Counsel	Domingo M. LLagostera (Reg. No. 70,684) BLANK ROME LLP 717 Texas Avenue, Suite 1400 Houston, TX 77002 Tel.:(713) 632-8682 / Fax:(713) 228-6605 domingo.llagostera@blankrome.com
Backup Counsel	Russell T. Wong (Reg. No. 32,322) BLANK ROME LLP 717 Texas Ave, Suite 1400 Houston, TX 77002 Tel.:(713) 632-8634 / Fax:(713) 228-6605 russell.wong@blankrome.com
Backup Counsel	Megan R. Wood (Reg. No. 72,367) BLANK ROME LLP 1825 Eye Street NW Washington D.C. 20006 Tel.:(202) 420-2753 / Fax:(202) 420-2201 megan.wood@blankrome.com
Backup Counsel	Alexander S. Perry (Reg. No. 68,030) BLANK ROME LLP 1825 Eye Street NW Washington D.C. 20006 Tel.:(202) 420-3115 / Fax:(202) 420-2201 alex.perry@blankrome.com

D. Service Information (37 C.F.R. §42.8(b)(4))

Please direct all correspondence to lead counsel and backup counsel at the addresses shown above. Petitioner consents to electronic service by e-mail, provided that all counsel for Petitioner are copied at the foregoing email addresses.

E. Payment of Fees (37 C.F.R. §42.103)

The undersigned authorizes the Commissioner to charge the fee specified by 37 C.F.R. §42.15(a) to Blank Rome LLP Deposit Account No. 23-2185, referencing attorney docket number 163456-00106. In addition, the undersigned representative authorizes the Commissioner to charge any additional fees which may be required, or credit any overpayment, to that deposit account.

II. COMPLIANCE WITH REQUIREMENTS FOR INTER PARTES PETITION PURSUANT TO 37 C.F.R. §§42.101 & 42.104(A)

Petitioner certifies that the '206 Patent is available for *inter partes* review; and (2) Petitioner is not barred or estopped from requesting *inter partes* review of any of the challenged claims on the grounds identified herein.

Under 35 U.S.C. §315(a)(1) an IPR may not be instituted if petitioner filed a "civil action challenging the validity of a claim of the patent." However, "[a] ***counterclaim*** challenging the validity of a claim of a patent does not constitute a civil action challenging the validity of a claim." 35 U.S.C. §315(a)(3) (emphasis added).

Petitioner filed the Iowa DJ Case, seeking declaratory judgment that the '206 Patent is invalid. For the reasons explained in detail below, Petitioner contends the statutory bar under §315(a)(1) does not apply to the Iowa DJ Case because the invalidity counts in that action are counterclaims of

invalidity under 35 U.S.C. 315(a)(3).

On May 6, 2022, Patent Owner sued for patent infringement in *Intirion Corporation v. College Products, Inc.*, No. 6:22-cv-00459-ADA (W.D. Tex.) ("the Texas Affirmative Case"), alleging that Petitioner infringes the '206 Patent and U.S. Patent Nos. 9,657,974, 10,495,374, and 11,274,876 (collectively, "the Asserted Patents"). Ex. 1004. Patent Owner served the complaint on Petitioner on June 8, 2022. Ex. 1019 at 3. As recognized by Patent Owner, Petitioner had compulsory counterclaims of non-infringement and invalidity in that case. Ex. 1007 at 3. Petitioner did not file those counterclaims in the Texas Affirmative Case because that venue was improper under the patent venue statute, 28 U.S.C. §1400(b). Under that statute, a Federal District is a proper venue for a patent case only if the alleged infringer is incorporated in the District or has a ***physical*** place of business in that District. *In re Cray Inc.*, 871 F.3d 1355, 1360–63 (Fed. Cir. 2017). College Products is incorporated in Iowa. It is a small business in Sioux City, Iowa, with less than 10 employees. College Products has never had a physical place of business, employees, or equipment stored in the Western District of Texas. As the Western District of Texas was clearly an improper venue for Patent Owner's lawsuit, Petitioner filed a Motion to Dismiss for Improper Venue. Ex. 1005.

Petitioner filed its compulsory counterclaims of non-infringement and invalidity in the Iowa DJ Case to preserve its right in a proper venue to adjudicate its counterclaims responsive to Patent Owner's patent infringement claims. That was the only proper venue for Intirion's patent claims against Petitioner. The complaint in the Iowa DJ Case states that Patent Owner's Texas Affirmative Case was filed in an improper venue and identifies its declaratory judgment requests as responsive to Patent Owner's allegations in the Texas Affirmative Case. Ex. 1017. Indeed, Petitioner only filed counterclaims of invalidity against patents Intirion already asserted against it in the Texas Affirmative Case. Ex. 1007.

Subsequently, on April 10, 2023, the Honorable Judge Alan Albright heard Petitioner's Motion to Dismiss for Improper Venue, held venue was improper, and found all of Patent Owner's reasons for filing in that court irrelevant, unpersuasive, and unconvincing. *See generally* Ex. 1006. At Patent Owner's request, Judge Albright transferred the Texas Affirmative Action to the Northern District of Iowa, resulting in the Iowa Transfer Case. *Id.*

On May 3, 2023, Patent Owner moved the Iowa court to consolidate the Iowa DJ Action into the Iowa Transfer Case so the parties could be aligned as they were in the Texas Affirmative Case, with Patent Owner being plaintiff. Patent Owner justified consolidation as follows:

- "[Patent Owner] filed its action first, in the Western District of Texas"
- "The primary purpose of this litigation is [Patent Owner's] claims of patent infringement, and *[Petitioner's] claims are properly characterized as defenses and counterclaims.*"
- "[Patent Owner] has asserted that [Petitioner] infringes [Patent Owner's] patents—[Petitioner'] claims (which are not adequately pled) can only be determined by resolving the issue of infringement."
- "Consolidation into *[Patent Owner's] affirmative case*, Case No. 23-CV-04023, would ensure *proper alignment of the parties and is consistent with the primary purpose of this litigation*."
- "[Petitioner] did not file its Declaratory Judgment Action until eight months after [Patent Owner] had filed its Affirmative Infringement Action. Pursuant to the first-to-file rule, Intirion's affirmative case should continue."
- "Proceeding in [Patent Owner's] affirmative infringement case, Case No. 23-CV-04023, will streamline the issues and allow the case to move forward in the 'traditional' manner, *i.e.*, with the party bearing the burden on infringement as the plaintiff, and the

party defending infringement as the defendant."

Ex. 1007 (emphasis added).

College Products agreed to consolidate the Iowa DJ Action into the Iowa Transfer Case. On June 7, 2023, the Court granted the parties' motion to consolidate and consolidated the Iowa DJ Action into the Iowa Transfer Case, with Patent Owner being plaintiff, on June 7, 2023. Ex. 1018.

Both Petitioner and Patent Owner understood and acknowledged that Petitioner's claims in the Iowa DJ Case were "properly characterized as…counterclaims" of invalidity and infringement. If Patent Owner tries to argue otherwise, it should be precluded from taking an inconsistent position before the Patent Office. Namely, Patent Owner should be precluded from arguing in this IPR that Petitioner's claims are not counterclaims, when it argued to the Iowa court that the claims are "properly characterized as…counterclaims" to have the Iowa DJ Case consolidated into the Iowa Transfer Case. Ex. 1007. That is appropriate because after consolidation, the parties are aligned as they were in the Texas Affirmative Case. Petitioner's defenses are properly characterized as counterclaims to Patent Owner's claims. Accordingly, those counterclaims fall within the exception under 35 U.S.C. §315(a)(3).

Further, this Petition is being filed within one year of service of a

complaint against Petitioner in the Texas Affirmative Case. *See* Ex. 1019 at 3.

For the foregoing reasons, Petitioner is not barred or estopped from requesting *inter partes* review of any of the challenged claims on the grounds identified herein.

Concurrently, Petitioner is filing a Power of Attorney pursuant to 37 C.F.R. §42.10(b). Proof of Service of this petition pursuant to §§42.6(e) and 42.105(a) is provided in the attached certificate of service.

III. SUMMARY OF THE ARGUMENT

The ’206 Patent claims generally recite a microwave appliance or microwave-refrigerator appliance that includes a smoke sensor for disabling power to the microwave upon sensing a dangerous level of smoke. After shutdown, the microwave power can be re-enabled if the smoke sensor no longer senses the dangerous condition. During prosecution, the Examiner found prior art disclosing smoke sensors in microwaves. But the claims were allowed because the prior art did not disclose the microwave could be re-enabled following smoke sensor shut down.

Smoke sensors were used in microwaves decades before the ’206 Patent’s priority date. Several prior art references discussed herein that were not considered by the Examiner disclose all of the claimed features, including

re-enabling the microwave after a smoke sensor shutdown, including, ISDU, Ueda, and Smith. Moreover, Emma, the parent application to the ’206 Patent, is prior art and disclosed all of the claimed features of a microwave-refrigerator combination. The Examiner did not consider this key prior art reference. All challenged claims of the ’206 Patent are unpatentable in view of ISDU, Ueda, Smith, or Butt, which describe resettable smoke sensor shutdown of microwaves, alone and in combination with Emma, a combined microwave-refrigerator.

IV. U.S. PATENT NO. 9,791,206

The technology of the ’206 Patent relates generally to a microwave oven and refrigerator combination that includes a smoke sensor. Ex. 1002, ¶¶[53], [64].

A. Effective Filing Date is No Earlier than April 25, 2014

The ’206 Patent, entitled “Multiple Linked Appliance with Auxiliary Outlet,” was filed as application no. 15/135,873 on April 22, 2016, and issued October 17, 2017. Ex. 1001 at (21), (22), (54). The ’206 Patent claims priority as a continuation-in-part (“CIP”) to U.S. Application No. 14/262,290 (“the ’290 Application”), which was filed on April 25, 2014, and published as U.S. Pub. 2014/0251982. *Id.* at (63); Ex. 1008. The ’290 Application claims priority as a CIP to U.S. Application No. 12/317,632 (“the ’632 Application”),

which was filed on December 23, 2008 and published as U.S. Pub. 2009/0188911 ("Emma"). Ex. 1008 at (63); Ex. 1011 at (10), (21), (22). As explained below, none of the Challenged Claims are entitled to claim priority to the Emma filing date.

As shown in Section VI.C.1 below, each of the Challenged Claims contain the following basic elements: Microwave Oven, Control Circuit, Power Supply Outlet, and Smoke Sensor, where the Smoke Sensor is configured to (i) supply a Shutdown Function to the microwave oven and (ii) provide a Reset Enable Function so that the microwave oven may be turned back on[2]. As shown in the attached redline comparison of Emma and the '290 Application, a smoke sensor was first mentioned in the '290 Application. *See* Ex. 1016, Ex. 1011 at ¶[0055]. As that element and others were not disclosed in Emma, the Challenged Claims cannot claim priority to Emma. The earliest possible priority date for the Challenged Claims is the filing date of the '290 Application, or April 25, 2014.

For purposes of this petition, Petitioner assumes that April 25, 2014 is the earliest priority date of the '206 Patent. However, Petitioner is not conceding the Challenged Claims are entitled to that priority date. Petitioner

[2] Capitalized terms are refer to elements of the Challenged Claims as shown in the Listing of the Challenged Claims, attached as Petition Appendix A.

reserves the right to contest in the parallel litigation proceedings that the Challenged Claims are not enabled by the ’290 Application.

B. Specification

The ’206 Patent is directed to a microwave oven and refrigerator combination that includes a smoke sensor. As discussed below in Section VI.C.1.b, Emma, the parent patent and prior art to the ’206 Patent, discloses a microwave oven and refrigerator combination, as shown in Figures 1 and 2 below, with auxiliary power receptacles and an electrical control scheme to prevent the combination from overloading. Ex. 1011 at Figs. 1-2.

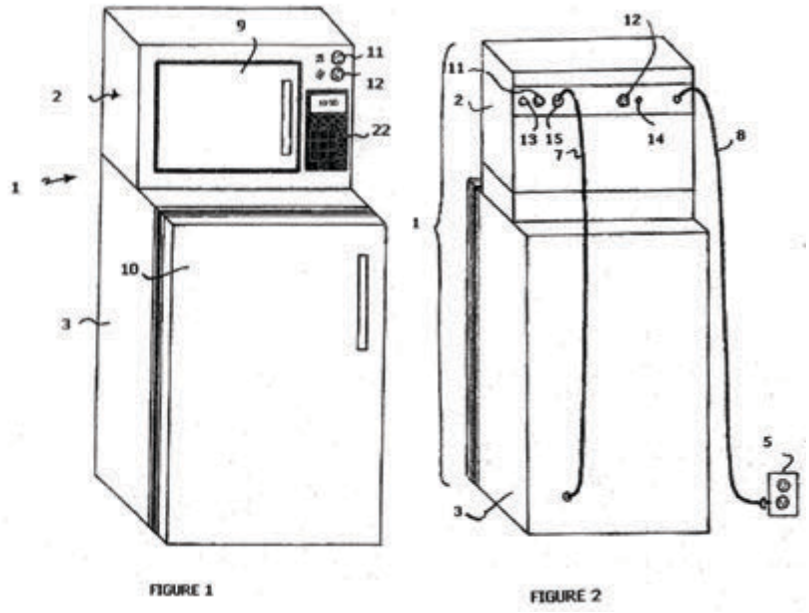

Emma generally describes a system where power to the refrigerator and auxiliary receptacle is cut off when the microwave is turned on. When the

microwave is turned off, power is restored to those components. Emma states: "a combination microwave and refrigerator System is constructed having a single plug input supply. *Id.* at Abstract. "The microwave oven is adapted to provide power to a refrigerator, and to auxiliary receptacles … a microprocessor controller adapted to monitor operation of the refrigerator compressor and controls the power to the microwave magnetron and other components." *Id.*, ¶[0008]. Moreover, as part of the device's electrical control scheme, power to both the refrigerator and the auxiliary power receptacles are disabled when the microwave demands cooking power: "When power to the microwave is demanded, the compressor is disabled for a preset minimum period. When microwave demand ceases, refrigerator power is restored…The control model is adapted to disable the power to the auxiliary receptacles, if the microwave is in operation." *Id.*, ¶¶[0011-12]; Ex. 1002, ¶[65].

Emma Figure 4 (below) shows a control circuit with the microwave controller 4 electrically controlling relays 19 and 20 for cycling power to refrigerator receptacle 15 and auxiliary outlets 11 and 12:

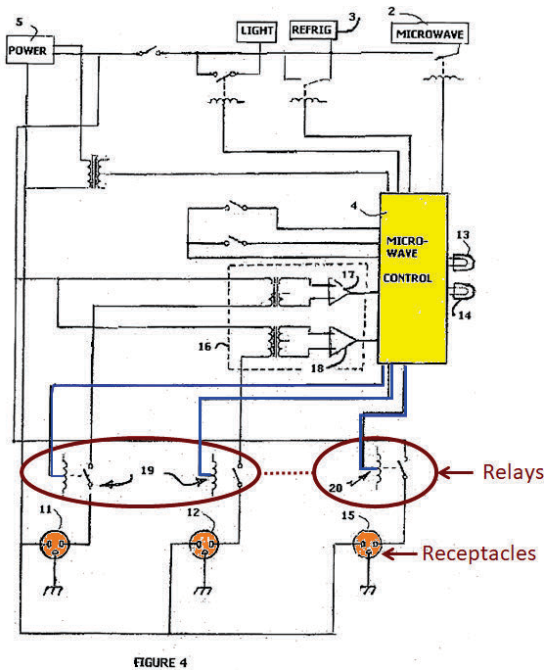

Ex. 1011 at Fig. 4 (annotated); Ex. 1002, ¶[66].

The '206 Patent includes the same microwave-refrigerator combination as Emma but adds a smoke sensor that can send a signal to shut down the microwave oven if smoke is detected and then reenable the microwave after smoke is no longer present. Ex. 1001, at claims 9, 11. "[A] safety sensor… such as a smoke or gas sensor may be provided in the microwave oven 2. The smoke sensor 226 operates to turn off the microwave oven upon sensing smoke or polluted air indicative of a potentially dangerous condition…." *Id.* at 9:26-30. "The alcohol/[smoke] sensor 226 may be reset automatically responsive to the alcohol sensor 226 no longer detecting gas indicative of the dangerous condition." *Id.* at 10:29-33; Ex. 1002, ¶[67].

C. Prosecution History

The application for the ’206 Patent was filed on April 22, 2016. Ex. 1003 at 1. It included 17 claims. *Id.* at 39-47. In the following discussion, the as-filed claim numbers are referenced first, followed by their as-issued claim numbers in brackets (if applicable).

The Examiner issued a non-final rejection on March 2, 2017. *Id.* at 174-91. The Examiner rejected original claims 1, 5-7, 18, and 19 as being unpatentable over U.S. Patent No. 5,521,359 to Bone in view of Japanese Patent No. 5-240447 to Ando, because Bone discloses a microwave-refrigerator combination where power is selectively delivered to the microwave and refrigerator, and Ando discloses using sensors in a microwave to sense smoke and disable the microwave if the smoke has reached a threshold level. *Id.* at 177-80.

The applicant filed a response to the rejection on May 16, 2017, where they amended the claims and added new claims 21[9], 22[10], 23[11], and 24[12]. *Id.* at 213-225. The amendments and new claims added the requirement that after the smoke sensor disables the microwave, the smoke sensor can be reset so that the microwave can be supplied with power in a next subsequent cooking session. *Id*. The applicant argued the amended and added claims should be allowed, because they included subject matter that was found allowable over the same prior art in co-pending and related application No.

15/135,883 ("the '883 Application"). *Id.* at 226-227. In the co-pending '883 Application, the Examiner allowed the claims over Bone and Ando because, *inter alia*, the prior art does not teach the smoke sensor is configured to be reset to enable the microwave oven to deliver cooking power in a next subsequent cooking session *responsive at least in part to the smoke sensor no longer sensing a dangerous condition*. *Id.*

The Examiner issued a notice of allowability on August 21, 2017. Ex. 1003 at 238-240. The Examiner stated in his reasons for allowance that the prior art does not show or fairly suggest the limitations of the claims incorporated with resetting the smoke sensor or logic circuitry to enable cooking power in a next cooking cycle "*responsive at least in part to the smoke sensor no longer sensing the dangerous condition*." *Id.* at 243-244. (emphasis added).

D. The Claims

The '206 Patent has 12 claims, with claims 1, 9, and 11 being independent. Ex. 1001 at claims 1-12. Only independent claims 9 and 11 (the "Independent Claims") are part of the Challenged Claims. The Challenged Claims can be found in the listing of the claims attached as Petition Appendix A. In the listing of the claims, Petitioner provides descriptors for the claim elements, which are used throughout this petition.

V. CHALLENGE AND RELIEF REQUESTED (37 C.F.R. §42.104(B))

A. Challenged Claims, Specific Art, and Statutory Grounds (§42.104(b)(1), (b)(2))

Petitioner requests institution of trial and cancellation of the Challenged Claims (i.e., claims 9, 10, 11 and 12) of the '206 Patent. The specific grounds for each Challenged Claim are summarized as follows:

Grounds 1 and 2: Claims 9 and 11 are anticipated under 35 U.S.C. §102 by and/or alternatively obvious under 35 U.S.C. §103 in view of ISDU;

Grounds 3 and 4: Claims 9 and 11 are anticipated under 35 U.S.C. §102 by and/or alternatively obvious under 35 U.S.C. §103 in view of Ueda;

Grounds 5 and 6: Claims 9 and 11 are anticipated under 35 U.S.C. §102 by and/or obvious under 35 U.S.C. §103 in view of Smith;

Grounds 7: Claims 9 and 11 are obvious under 35 U.S.C. §103 in view of Ueda combined with Smith;

Grounds 8, 9, and 10: Claims 9 and 11 are obvious under 35 U.S.C. §103 in view of one of ISDU, Ueda, or Smith combined with Butt;

Grounds 11, 12, 13, 14, 15 and 16: Claims 10 and 12 are obvious under 35 U.S.C. §103 in view of Emma combined with either ISDU, Ueda, or Smith (with an alternative combination with Butt).

B. Claim Construction (§42.104(b)(3))

Petitioner does not believe any claim term requires a construction to

find the Challenged Claims invalid for the reasons provided in this Petition.[3] Ex. 1002, ¶[116]. However, as explained below, Petitioner applies Patent Owner's interpretations of two claim terms to avoid unnecessary arguments regarding claim construction. The Challenged Claims are invalid even using Patent Owner's constructions.

1. "Enable"

Claim 9 recites

> wherein the smoke sensor is configured to be reset after ending the current cooking session prior to the set end time based on sensing the smoke indicative of the dangerous condition, to enable the microwave oven to deliver cooking power in a next subsequent cooking session responsive at least in part to the smoke sensor no longer sensing the smoke indicative of the dangerous condition

Ex. 1001 at claim 9.

Claim 11 recites

> wherein the control circuit is configured to reset after ending the current cooking session prior to the set end time due to sensing the dangerous condition, to enable cooking power to again be available to the microwave oven in a next subsequent cooking

[3] Petitioner reserves all rights to raise claim construction and other arguments, including challenges under 35 U.S.C. §§101 or 112, in district court as relevant to those proceedings. *See, e.g., Target Corp. v. Proxicom Wireless, LLC*, IPR2020-00904, Paper 11 at 11-13 (P.T.A.B. Nov. 10, 2020).

> session responsive at least in part to the smoke sensor no longer sensing the dangerous condition

Ex. 1001 at claim 11.

Although the parties have not yet exchanged proposed claim constructions in the related district court proceeding, Patent Owner has provided infringement contentions and correspondence to Petitioner demonstrating its interpretation of this element. *See generally* Ex 1009, Ex. 1010. The Board may consider Patent Owner's statements in its contentions about the scope of the challenged claims to determine the proper meaning of claim terms in IPR proceedings. *10X Genomics, Inc. v. Bio-Rad Labs., Inc.*, No. IPR2020-00087, Decision on Institution, 2020 WL 2026687, *7–9 (P.T.A.B. April 27, 2020) (collecting authority).

In the claim charts and correspondence from Patent Owner to Petitioner explaining its infringement allegations, Patent Owner contends that enabling the microwave has no "temporal limitation." Ex. 1010. Namely, that as long as the microwave oven is operating and the smoke sensor is not sensing a dangerous condition, it satisfies enabling the microwave oven. *Id.* For purposes of this Petition, Petitioner uses that construction and shows, below, the claims are invalid under Patent Owner's construction. However, Petitioner does not adopt Patent Owner's construction and reserves all rights to contest

Patent Owner's construction in the related litigation proceedings. Whether the Board adopts Patent Owner's construction or applies a construction that includes a temporal limitation, the claims are still invalid based on the arguments presented below. Ex. 1002, ¶[121].

2. "Dangerous Condition"

As shown above in Section V.B.11., claims 9 and 11 recite: "responsive at least in part to the smoke sensor no longer sensing the dangerous condition." Ex. 1001 at claims 9, 11. In its infringement contentions, Patent Owner interprets "dangerous condition" as merely sensing some level of smoke. Ex. 1009 at 5. Petitioner applies what it understands Patent Owner contends is the meaning of this term in this Petition and shows below the claims are invalid under Patent Owner's construction. Ex. 1002, ¶[123]. However, Petitioner does not adopt Patent Owner's construction and reserves all rights to contest Patent Owner's construction in the related litigation proceedings, including that this term is indefinite.

C. Unpatentability (§42.104(b)(4))

The Challenged Claims are unpatentable as detailed in Section VI.

D. Supporting Evidence (§42.104(b)(5))

Petitioner's exhibits are filed herewith. The relevance of the evidence, including identification of specific evidence that support this challenge is

found in Sections VI.A–VI.C. Petitioner submits the declaration of Mark N. Horenstein (Ex. 1002) in support of this Petition pursuant to 37 C.F.R. §1.68.

VI. THE CHALLENGED CLAIMS ARE UNPATENTABLE

A. The Level of Ordinary Skill in the Art

In this case, a POSITA would have had at least a bachelor's degree in electrical engineering or computer engineering. Ex. 1002 ¶[50]. Alternatively, a POSITA could have had a bachelor's degree in mechanical engineering, industrial engineering, physics, or a related engineering or discipline, plus at least two years of experience working with control circuits, sensors, kitchen appliances, or similar fields. *Id.*

B. The Scope and Content of the Prior Art

1. The Prior Art is Analogous

A POSITA would understand the field of the invention to be electrical kitchen appliances including refrigeration and cooking appliances, including the control circuits to enable functions. Ex. 1002 ¶[48]. For example, the '206 Patent describes the field as "improvements to appliances that include compact refrigerators and microwave oven functionality" Ex. 1001 at 1:17-19. The Technical Field section of the '206 Patent states: "Exemplary embodiments relate to improvements to appliances." *Id.* at 1:15-20. Similarly, the Background and Summary sections states: "Compact refrigerators and

associated appliances may benefit from improvements" and "In one exemplary embodiment, an apparatus is provided that includes a microwave oven," respectively. *Id*. at 1:33-34, 1:37-38.

As shown below, all of the references relied on herein are from this exact same field, i.e., electrical kitchen appliances, qualifying them as analogous prior art. Ex. 1002 ¶[95]. Moreover, all of the references are directed to the same type of subject matter as in the '206 Patent. *Id.* Each reference relates to smoke or gas sensing in an electrical cooking appliance to shut down the appliance to prevent over cooking and/or a fire from accelerating (e.g., ISDU, Ueda, Smith, and Butt), or relates to using logic circuitry in a microwave-refrigerator combination to shut power to the microwave when the refrigerator is in use (e.g., Emma). *Id.*

2. <u>The Prior Art References</u>

Prior art references ISDU, Ueda, Smith, and Butt were not of record in the prosecution of the '206 Patent. Emma, which is the parent application to the '206 Patent, is a critical prior art reference to the Challenged Claims, but was not referenced or cited by the Examiner as prior art. Emma is prior art because the Challenged Claims claim new matter not disclosed in Emma. *Supra* at Section IV.A. The Examiner may not have appreciated Emma is prior art because it is the parent patent.

a. *ISDU*

ISDU: Integrated Smoke detector Unit for Commercial Microwave Ovens, Cory Lloyd *et. al*, Northeastern University ("ISDU") published on April 17, 2007, on "IRis". Ex. 1012. IRis was a "digital archive," indexed on Google and readily accessible worldwide, that allowed Northeastern University researchers, starting in 2006, to publish their work to "promote and preserve their intellectual output" and was a precursor to Northeastern University's more current Digital Repository Service. Ex. 1002 ¶¶[96-98]. Per IRis's publishing practices, ISDU was published and publicly available in Northeastern University's digital archive in 2007. *Id.* ISDU is prior art pursuant to at least 35 U.S.C. §102(a)(1). *See id.*, ¶[98].

ISDU discloses, among other things: that "smoke detection devices be integrated into range ovens and microwaves ... when smoke is detected during microwave operation, the device will temporarily disable microwave operation and let the user know that the food has begun to smoke or even burn." Ex 1012 at 1. Reproduced below is a diagram of ISDU's smoke detector circuit interface:

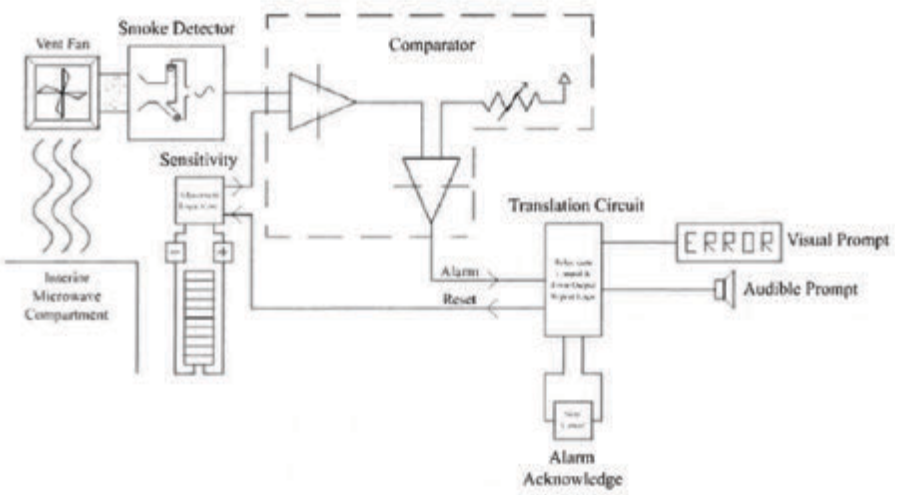

Figure 4

Id. at Fig. 4; Ex, 1002, ¶[99].

The microwave in the above diagram includes a vent fan where air will flow through to the smoke detector. If the detector reaches its predetermined condition, then a signal is sent to the translation circuit to shut down the microwave oven and emit an audible alarm, a visual prompt and waits for the user's acknowledgement:

> [O]nce smoke is detected, we will send a signal that lets a circuit interrupt the power to the microwave through the use of a 'soft' power-off function already in use by the microwave logic. This will stop the microwave while simultaneously sounding an alarm. After the alert, the user will be able to reset the microwave, change its sensitivity, or stop microwaving.

Ex. 1012 at 6. "Acknowledgement of the alarm state will reinstate all normal microwave functions and reset the smoke detector circuit for further use." *Id.*

at 8; Ex, 1002, ¶[100].

b. *Ueda*

U.S. Patent No. 4,587,393 ("Ueda") (Ex. 1013), entitled "Heating apparatus having a sensor for terminating operation," issued May 6, 1986. Ueda is prior art pursuant to at least 35 U.S.C. §102(a)(1). As shown below in Figure 1, Ueda discloses a microwave having a "duct 22 for exhausting air from within the cooking chamber 15 through perforation 24 and overlapping slats 25…The size of perforations 24 and the slits is such that microwave energy does not leak out…while permitting a sufficient amount of smoke to escape through them." *Id.* at 2:14-20. A sensor 30 is mounted within an enclosure 31 and "detects the diffusing substance to de-energize the heater when the sensor develops a voltage indicating a predetermined condition of the heated material." *Id.* at 1:38-43; Ex, 1002 ¶[102].

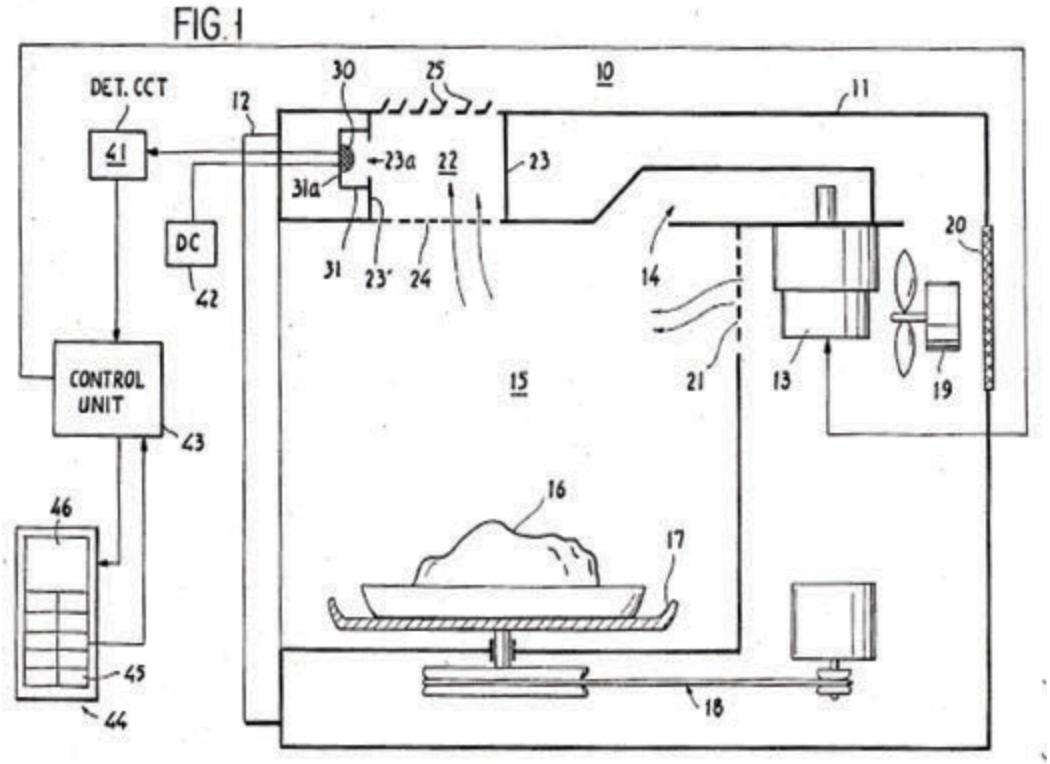

Ex. 1013 at Fig. 1.

Additionally, as shown in Figure 5 below, Ueda teaches a logic flow for the Control Unit, which provides for initializing the microwave, and a control sequence for when the microwave is in operation. *Id*. at 3:47-4:17, Fig. 5. In automatic cooking mode, once a predetermined sensor condition is met, the microwave oven will shut down, a "buzzer" will sound, and the control sequence resets to enable further use once the microwave is re-initialized. *Id.* at 4:13-17; Ex, 1002 ¶[103].

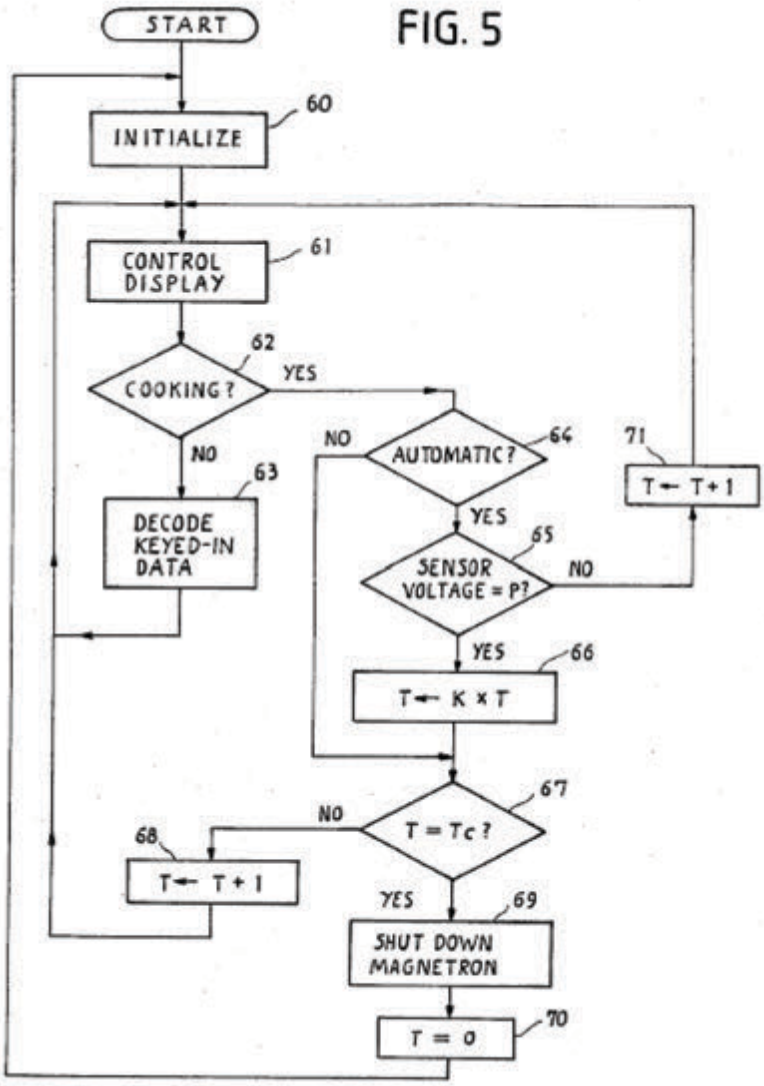

Id. at Fig. 5.

c. *Smith*

U.S. Patent No. 4,496,817 ("Smith") (Ex. 1014), entitled "Automatic Fire Detection for Microwave Oven," issued January 29, 1985. Ex. 1014 at [45], [54]. Smith is prior art pursuant to at least 35 U.S.C. §102(a)(1).

Smith discloses "a method and apparatus for anticipating the

occurrence of a fire in the cooking cavity of a microwave oven." *Id.* at 1:55-57. Smith discloses that "before actually reaching the ignition point, the food begins to char, smoke or smolder" resulting in a period of "rapidly increasing gas concentration in the circulating air…." *Id.* at 3:51-56. As shown in Figure 2 (reproduced below), the oven [10] in Smith has "a blower for continuously circulating air and a sensor [52] responsive to the concentration of gases in the circulating air." *Id.* at Abstract.

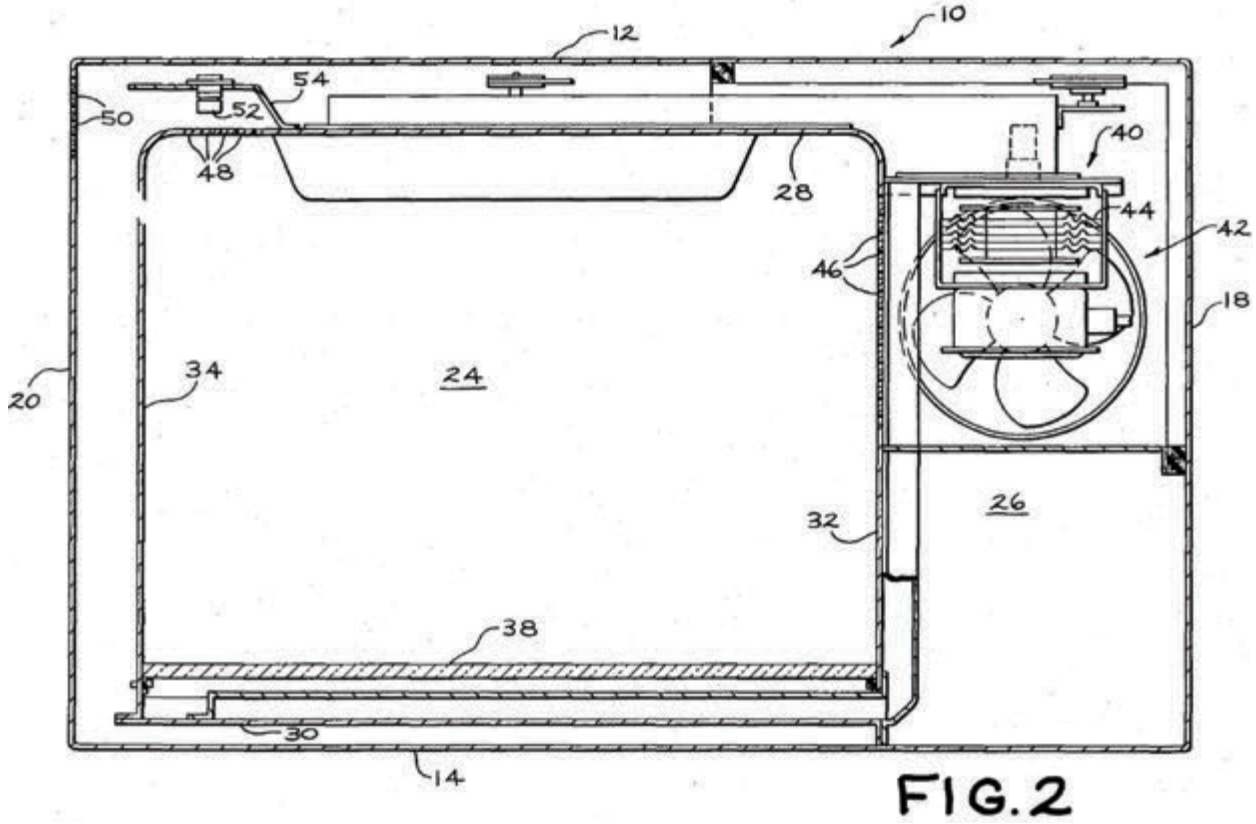

FIG. 2

Id. at Fig. 2. Smith further discloses that "upon the detection of a characteristic rate of change indicative of the load being heated closely approaching its combustion point, power to the oven is turned off and indication is provided

to the user that a combustion condition in the oven cavity is imminent." *Id.* at 1:57- 2:4; Ex. 1002 ¶[104].

d. *Butt*

U.S. Patent No. 8,446,048 ("Butt") (Ex. 1015), entitled "Controller for a safety shut-off system" and issued on May 21, 2013, based on application no. 12/733,212 filed on 04/29/2010, which was a national stage entry of PCT/CA2008/001462 filed on August 18, 2008. Ex. 1015 at (21), (22), (45), (54), (86). Butt is prior art pursuant to at least 35 U.S.C. §102(a)(1).

Butt discloses a safety shutoff for electrical kitchen appliances. *Id.* at 3:64-66. In particular, "a controller for interrupting a supply of electricity to an appliance upon detection of a trigger, such as Smoke." *Id.* at 1:16-18. Specifically, "[t]he trigger may be, for example, a signal from a hazard detector such as a smoke detector." *Id.* at 2:33-34. And the signal can be "transmitted… either wirelessly or using a wired connection." *Id.* at 2:51-52; Ex. 1002 ¶[106]

Figure 1B

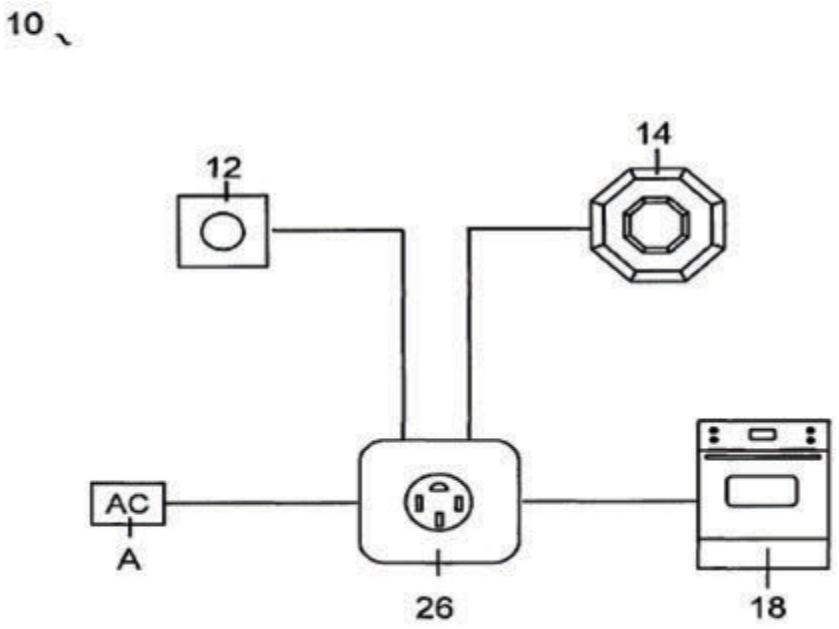

Ex. 1015 at Fig. 1B.

For example, as shown in Figure 1B (reproduced above), Butt discloses the system 10 may include a smoke detector 14 connected to a circuit box 26 housing a controller 20. *Id.* at 4:53-55. "If the detector 14 detects the presence of smoke, then … signal 15 is transmitted and is received by the controller 20. Upon receiving the signal, the controller interrupts the AC power supply to the appliance 18 and consequently shuts the appliance 18 off." *Id.* at 4:53-58. As a result, "the energy that would otherwise act as an accelerant for the fire

is eliminated, and the progress of the fire is slowed." *Id.* at 4:58-60; Ex. 1002 ¶[107].

Butt discloses a reset button 12 that re-enables the system for further use by checking for a smoke alarm system signal and then closing a relay to reconnect the electrical appliance to AC power. *See* Ex. 1015 at 6:53-7:20; Ex. 1002 ¶[108].

e. *Emma*

U.S. Patent Publication No. 2009/01889117 ("Emma") (Ex. 1011), entitled "Multiple Linked appliances with Auxiliary Outlet," published on July 30, 2009. Ex. 1011 at (43), (54). Emma is prior art pursuant to at least 35 U.S.C. §102(a)(1). As discussed above, Emma is a parent application to the '206 Patent and is prior art. *Supra* at IV.A.

Emma is directed to a combination microwave refrigerator in which the refrigerator is plugged into an auxiliary outlet that is controlled by a control circuit adapted to open and close one or more power relays. Ex. 1011 at Abstract. The control circuit controls relays to supply or withdraw power to the refrigerator and/or other loads while the microwave is actively operating for the purpose of preventing an overload condition on the supply circuit. *See id.*, ¶¶[0025-0027]; Ex. 1002 ¶[110].

As shown in Figure 2 (reproduced below), Emma discloses a

microwave oven refrigerator combination in which the refrigerator connects to a receptacle 15 power supply outlet on the microwave oven with both appliances being powered by a single cord 8. Ex. 1011 ¶[0008]; Ex. 1002 ¶[111].

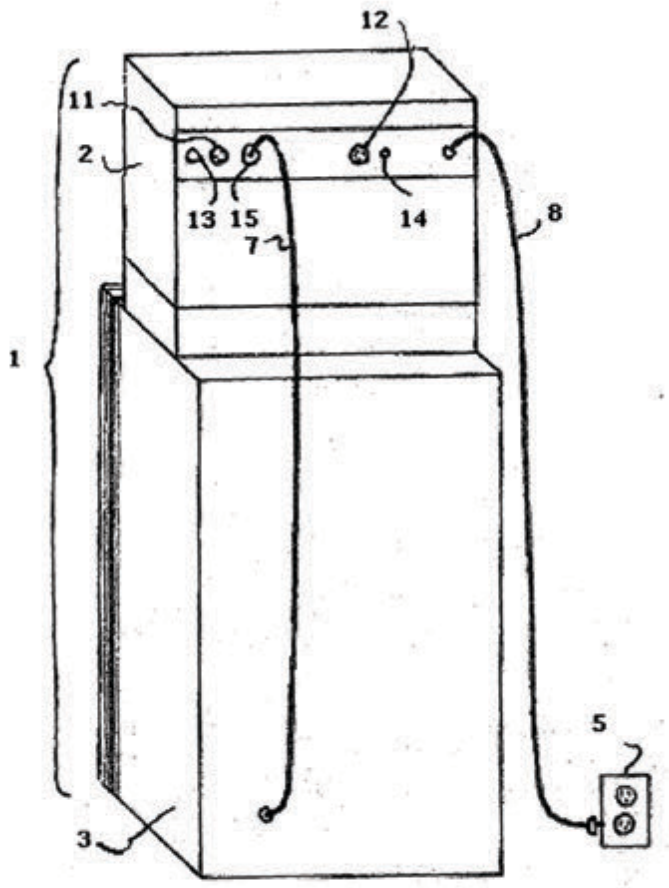

FIGURE 2

Furthermore, the "microwave oven includes a microprocessor controller adapted to monitor operation of the refrigerator compressor and

controls the power to the microwave magnetron and other components." Ex. 1011 ¶[0026]; Ex. 1002 ¶[112].

As shown in the below diagram of the control circuit (Figure 4), Emma discloses a control circuit providing for digitally operating relays 19, 20 for controlling the receptacles 11, 12, and 15. Ex. 1011 ¶[0029]; Ex. 1002 ¶[113].

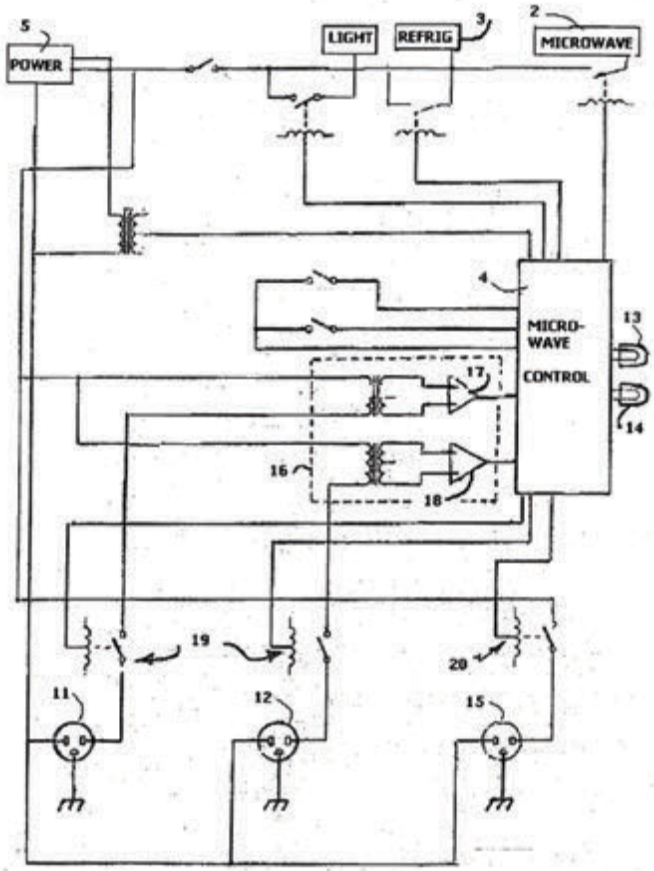

FIGURE 4

Ex. 1011 at Fig. 4.

Emma discloses "[t]he current demands of the microwave 2 are generally the most significant contribution to overload …." *Id.*, ¶[0033]. As

shown in Figure 6 below, to avoid overload conditions, Emma discloses several control methods to disable and/or limit power to the refrigerator during microwave operation. *Id.*, ¶[0037]; *see also* Ex. 1002 ¶¶[114-15].

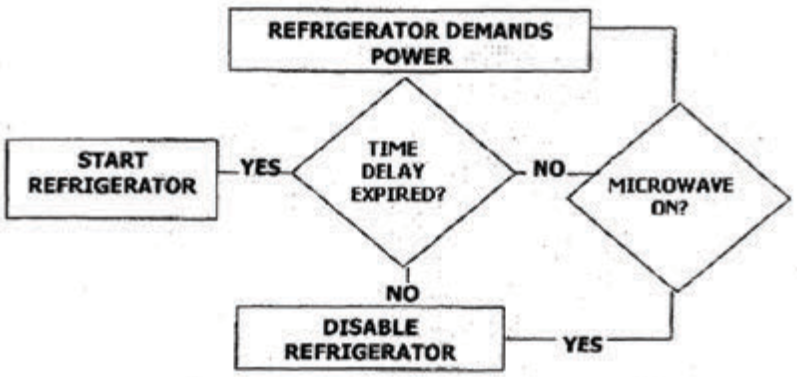

FIGURE 6

Ex. 1011 at Fig. 6. For example, when the refrigerator demands power, it will first check to see if the microwave is on. *Id.* If it is, it will not start. *Id.* If the microwave oven is not on and the time delay has expired (a method used in Emma to "prevent undesirabl[e] rapid on/off cycles"), the refrigerator may receive power. *Id.*, ¶[0030].

C. Differences Between the Claimed Subject Matter and the Prior Art

1. <u>The Prior Art References Teach All Elements of the Challenged Claims.</u>

The teachings of the prior art references are mapped to each element of the Challenged Claims below. Due to the similarity of the claims, the analysis

is organized by reference to the basic claim elements common to each of the Challenged Claims. However, where an element differs from the basic common element, that claim element is specifically analyzed.

a. *The Independent Claims (Claims 9 and 11)*

i. *Microwave Oven*

(A) ISDU

ISDU, entitled "ISDU: Integrated Smoke Detector Unit for Commercial Microwave Ovens," discloses a microwave oven. Ex. 1012 at 1; Ex. 1002 ¶¶[129-31]. ISDU states: "We suggest that smoke detection devices be integrated into range ovens and microwaves, the leading causes of domestic structure fires." Ex. 1012 at 1.

It is inherent that a microwave must be connected to a source of electrical power to work. Ex. 1002 ¶[130]. ISDU also specifically discloses a microwave oven connected to a source of electrical power: "[p]ower will be drawn from the low voltage power supply integrated into the microwave. Should power consumption exceed available power for the circuitry, an additional low voltage power supply will be installed and integrated into the input AC source." Ex. 1012 at 9.

(B) Ueda

Ueda discloses a microwave oven: "Referring now to FIG. 1, there is

shown a microwave oven 1" and a "Magnetron 13 is mounted in a position adjacent an energy radiating duct 14 through which microwave energy is radiated into a heating chamber 15." *See, e.g.*, Ex. 1013 at 2:4-10. Figure 1 of Ueda (reproduced below) shows "a microwave oven with a control unit [43]." *Id.* at 1:50-51; Ex. 1002 ¶[132].

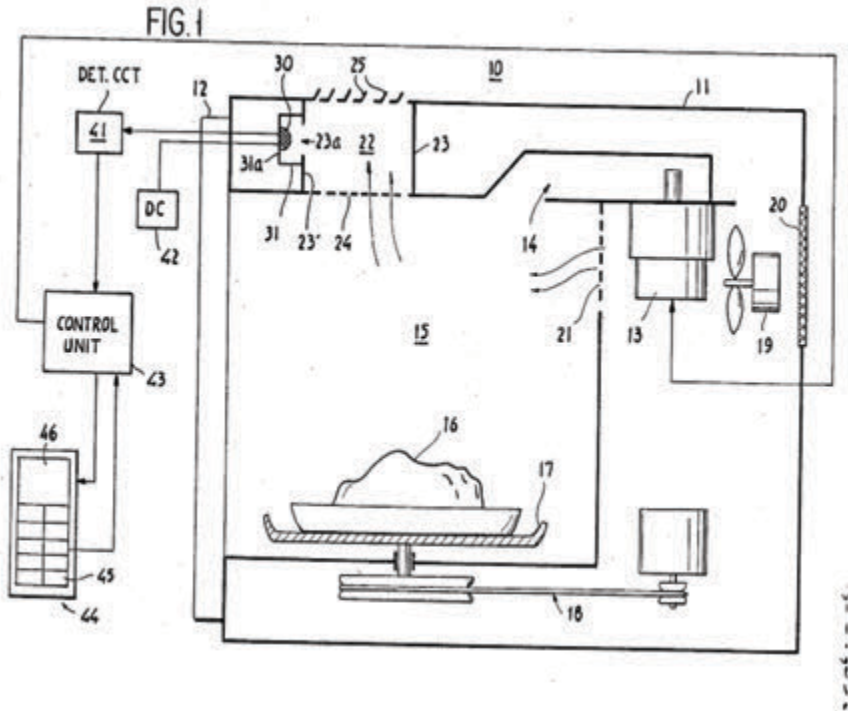

Ex. 1013 at Fig. 1.

Ueda further discloses the microwave oven is connected to a source of electrical power. Referring to Figure 4 (reproduced below) which is a block diagram of the control unit, Ueda teaches the microwave oven receives alternating current (AC) power from power source 53 and teaches how it is directed internally. Ex. 1013 at 3:31-44; Ex. 1002 ¶[133].

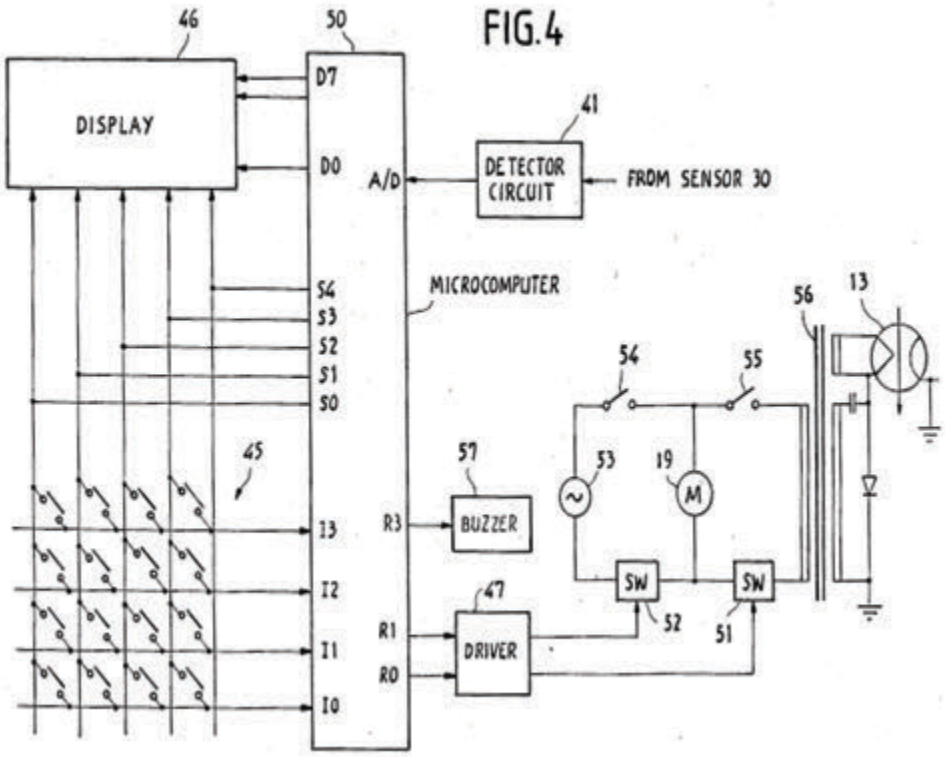

Ex. 1013 at Fig. 4.

(C) Smith

Smith discloses a microwave oven. For example, Figures 1 and 2 (reproduced below) show a microwave oven 10. Ex. 1014 at 2:37-43; Ex. 1002 ¶[134].

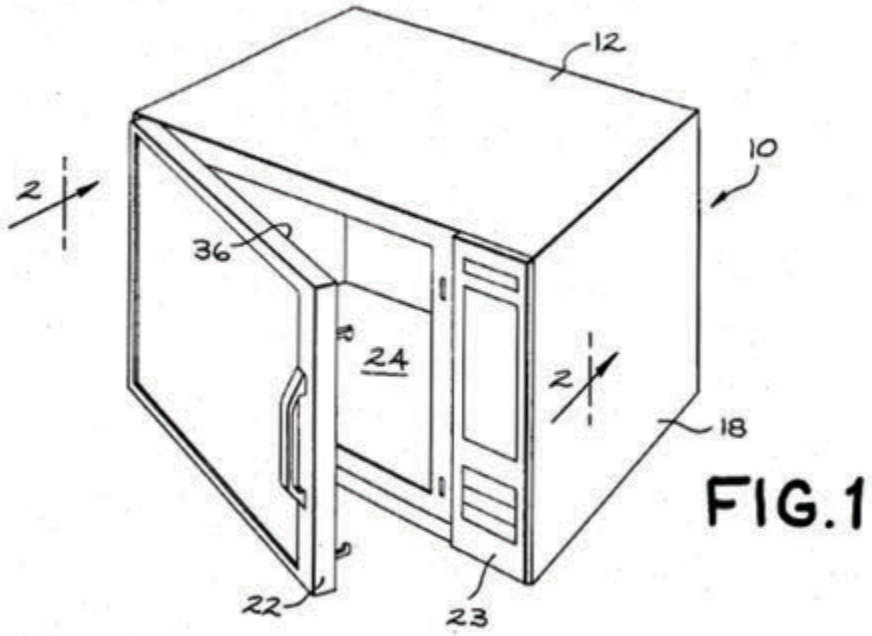

FIG.1

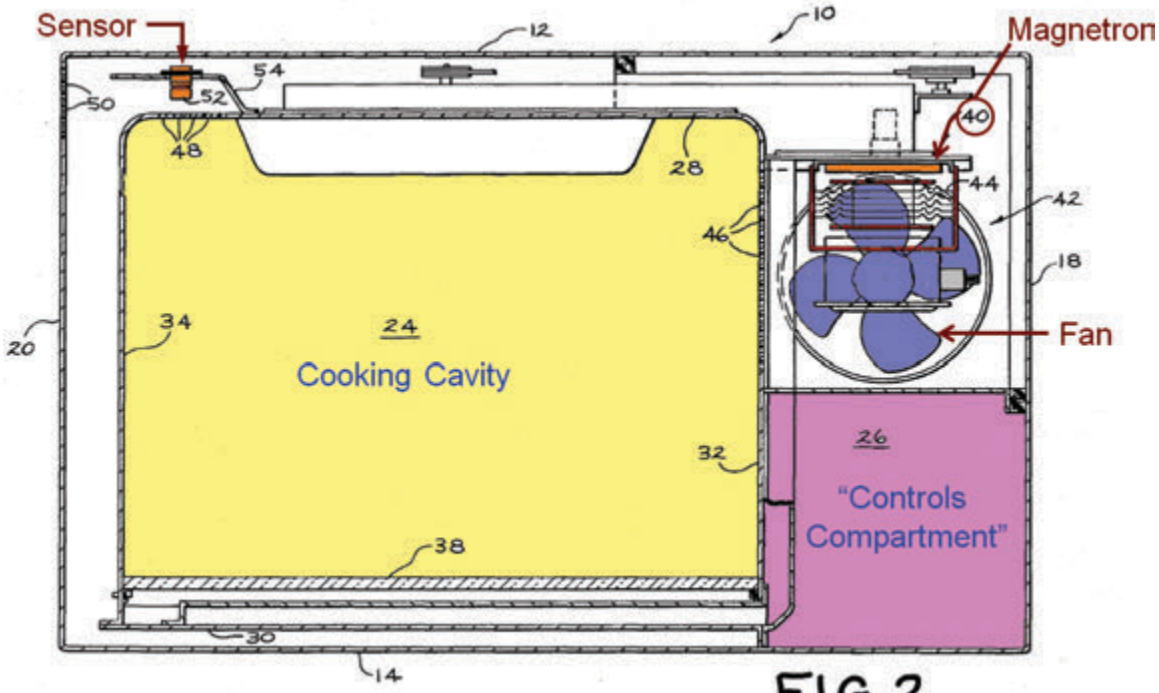

FIG.2

Ex. 1014 at Figs. 1-2 (annotated).

Further, Smith discloses a microwave oven connected to a source of electrical power. Referring to Figure 4 reproduced below, which is a simplified circuit diagram, Smith teaches how the microwave oven receives power from conventional DC power supply circuit 70. *Id*. at 5:15-19; Ex. 1002 ¶¶[135-36].

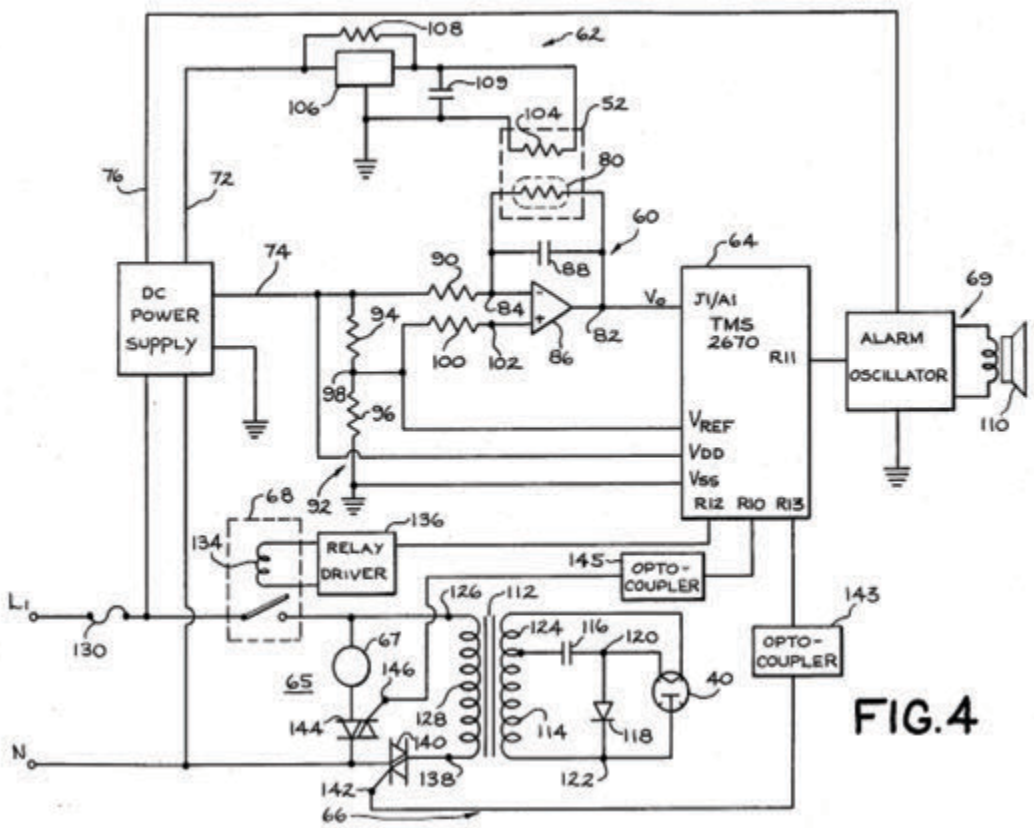

Ex. 1014 at Fig. 4.

(D) Butt

Butt discloses a device that can be coupled to any kitchen appliance, stating "[t]he exemplary embodiment…is directed to a safety shut-off system

used in a kitchen, but ***the invention may be applied to other applications involving electrical appliances generally***." Ex. 1015 at 3:61-67 (emphasis added). A POSITA would understand that Butt discloses electrical cooking appliances that can create smoke would include ovens, such as microwave ovens. Ex. 1002 ¶[136].

Butt further discloses an electric appliance connected to a source of electrical power. Referring to Figure 1A reproduced below, Butt teaches a device that can be coupled to an AC power source A and an electric appliance 18, and communicate wirelessly upon the device detecting smoke. Ex. 1015. at 4:29-34. Additionally, Butt states: "[d]uring normal operation, the appliance 18 is plugged into the circuit box 26 and the controller 20 allows electricity to be conducted from AC power supply A to the appliance 18." *Id.* at 2:37-40; Ex. 1002 ¶[137].

Figure 1A

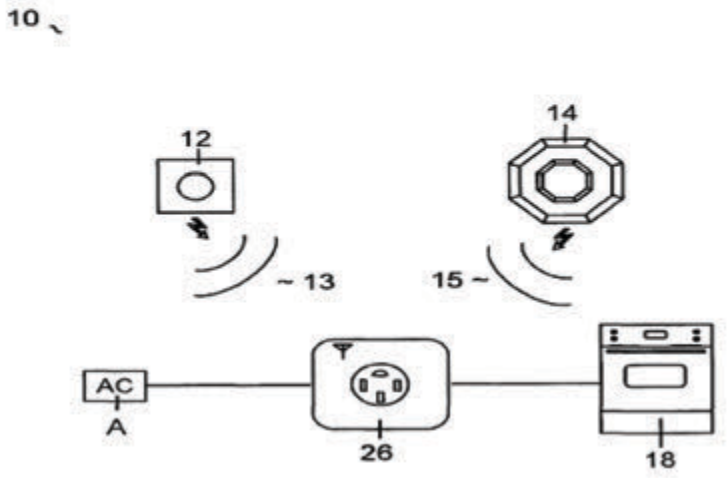

Id. at Fig. 1A.

(E) Emma

Emma discloses a microwave oven connected to a source of electrical power: "A system of linked appliances comprising: a microwave oven connected to a source of power." *See, e.g.*, Ex. 1011 at Claim 1. As shown below in Figure 2, the microwave oven 2 is connected to power source 5. *Id.*, ¶[0026]; Ex. 1002 ¶¶[138-39].

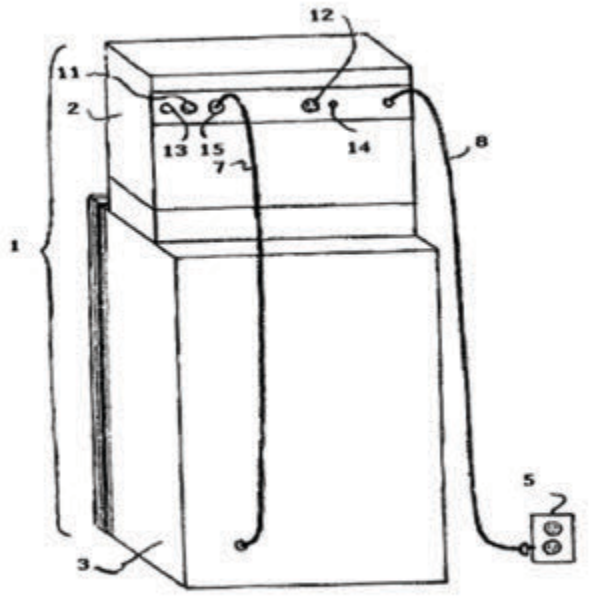

FIGURE 2

Id. at Fig. 2.

ii. *Control Circuit*

(A) ISDU

As described below and shown in Figure 4 (reproduced below), ISDU discloses a control circuit configured to control the operation of a microwave oven:

> Once smoke is detected, we will send a signal that lets a circuit interrupt the power to the microwave through the use of a 'soft' power-off function already in use by the microwave logic. This will stop the microwave while simultaneously sounding an alarm.

Ex. 1012 at 6–8; Ex. 1002 ¶¶[141-42].

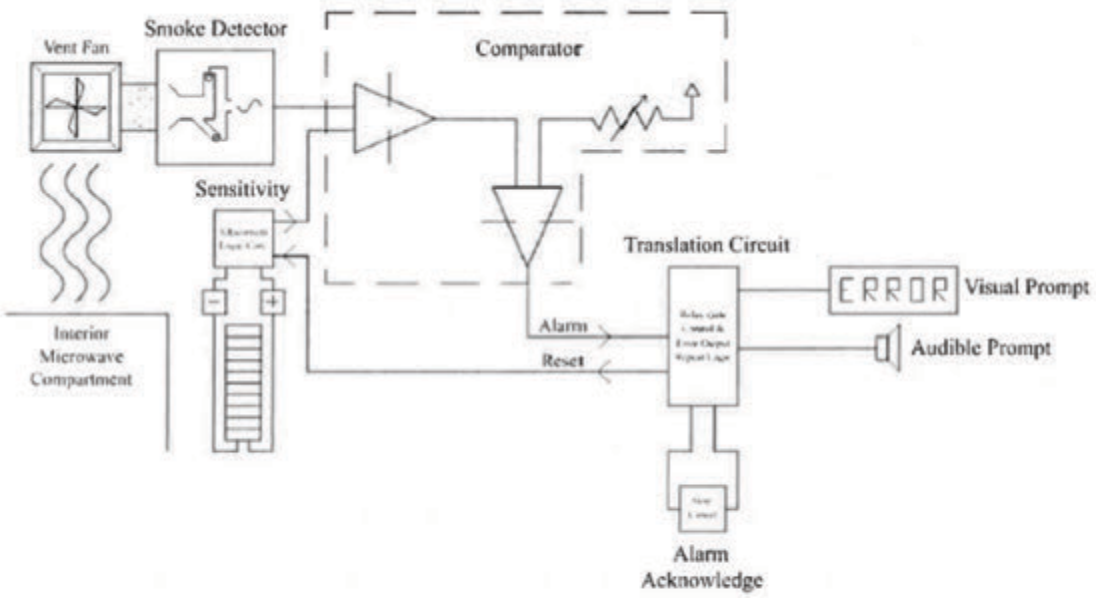

Figure 4

Ex. 1012 at Fig. 4.

(B) Ueda

Ueda discloses a microwave having a control unit (i.e., "control circuit") configured to control the operation of a microwave oven. As explained below and shown in Figure 1 (annotated below), the control unit 43 receives input from the data-entry/display panel 44 and gas sensor 30 and directs the microwave oven based on the data received. Ex. 1013 at 3:9-23; Ex. 1002 ¶¶[143-45].

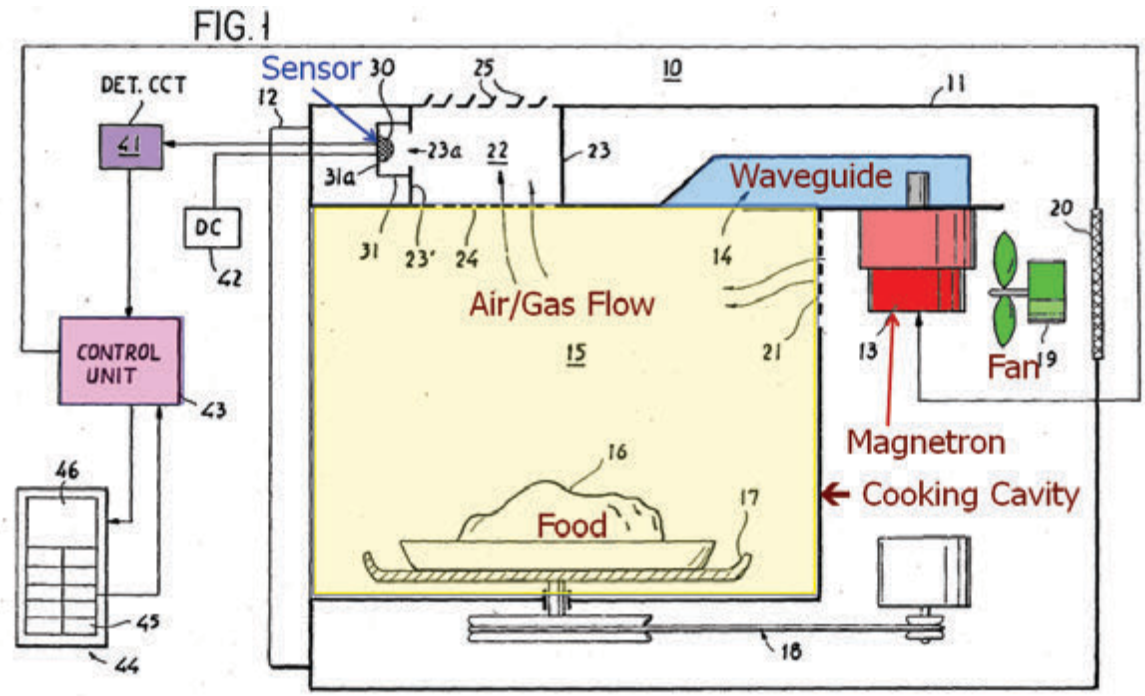

Ex. 1013 at Fig. 1 (annotated).

(C) Smith

Smith discloses the microprocessor (i.e., an exemplary form of "control circuit") configured to control the operation of the microwave oven. Specifically, referring to Figure 4 below, it states: "[m]icroprocessor 64 is a standard TMS 2670 series 4K microprocessor of the type readily commercially available from Texas Instruments. The ROM of microprocessor 64 has been customized to perform the desired control functions for microwave oven 10." Ex. 1014 at 6:34-37; *see also id.* at 7:16-25; Ex. 1002 ¶¶[146-47].

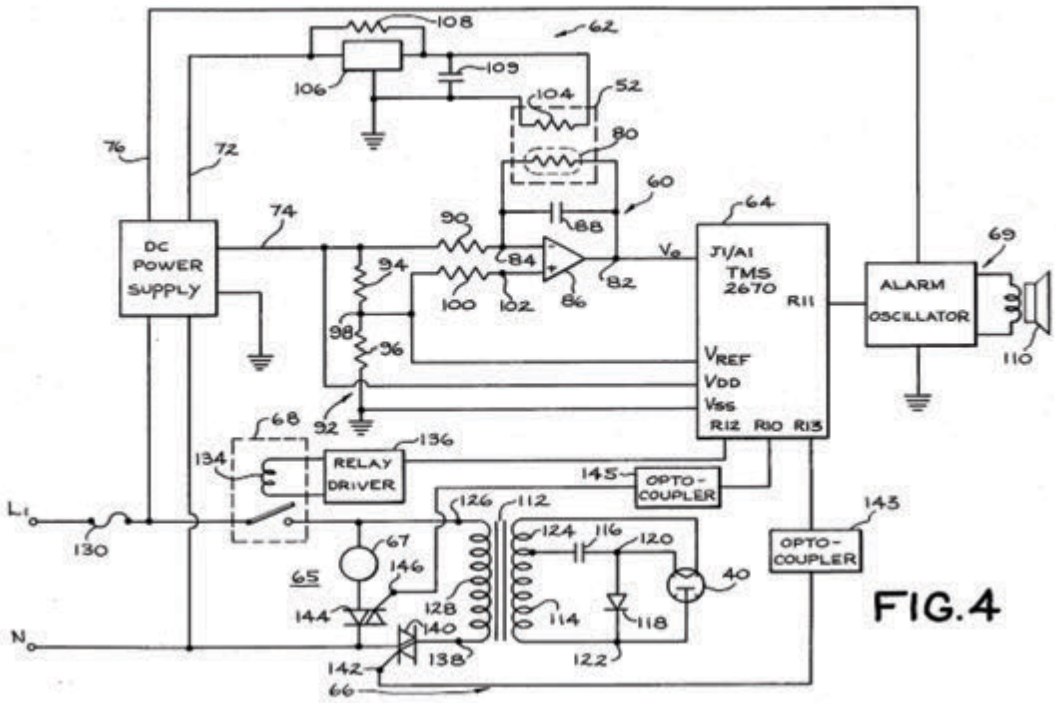

Ex. 1014 at Fig. 4.

(D) Butt

Butt discloses a controller 20 configured to control the operation of the kitchen appliance. The device taught in Butt is configured to supply or cut power to the appliance coupled to the controller: "The microcontroller 36 is programmed with firmware that operates according to the flowchart of FIG. 7 [reproduced below]." Ex. 1015 at 5:44-51; *see also id.* at Figs. 2-3; Ex. 1002 ¶[148].

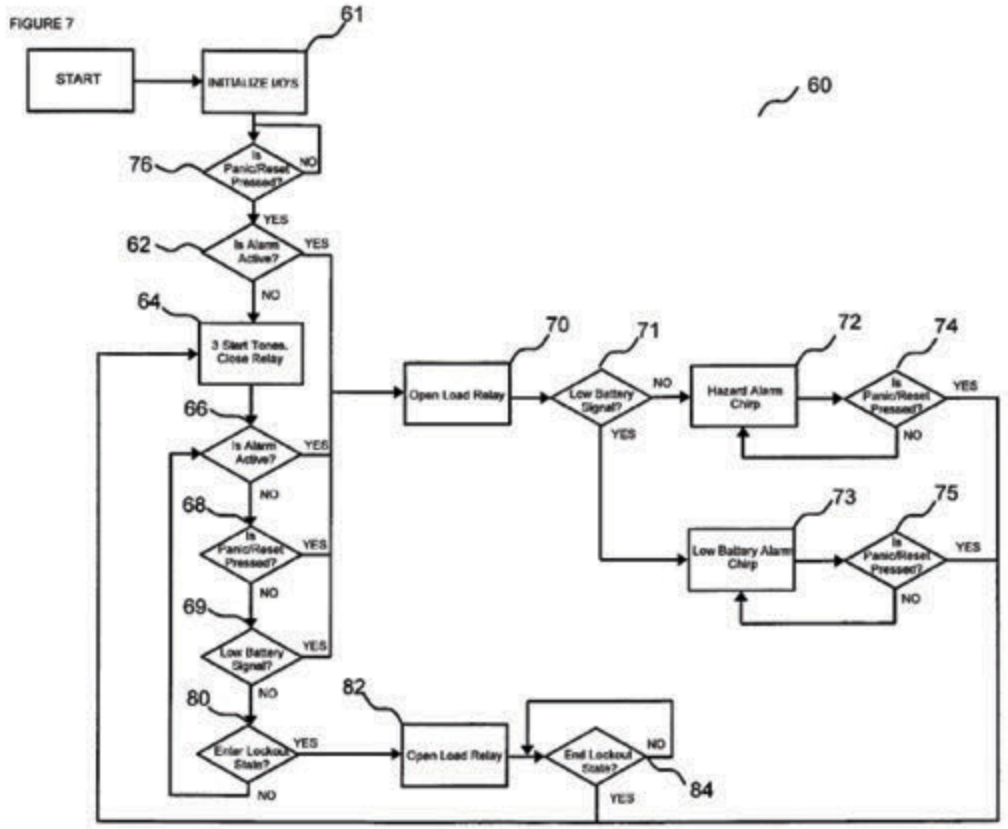

Ex. 1015 at Fig. 7.

(E) Emma

Emma discloses a microprocessor-based control circuit installed in the microwave that is in operative connection with the refrigerator receptable or first power supply outlet (i.e., "power supply outlet"). Specifically, it states in claim 1: "wherein the control processor is configured to enable or disable power to the microwave oven, the first power supply outlet and the second power supply outlet, according to an algorithm in the control processor…."

Ex. 1011 at claim 1; Ex. 1002 ¶[149].

iii. *Smoke Sensor*

(A) ISDU

ISDU discloses a smoke sensor positioned in the microwave oven. As shown in FIG 4 (below), the smoke detector is integrated into the microwave, i.e., that it is in an interior area or within the microwave. Ex. 1012 at 3, 5; Ex. 1002 ¶¶[150-52].

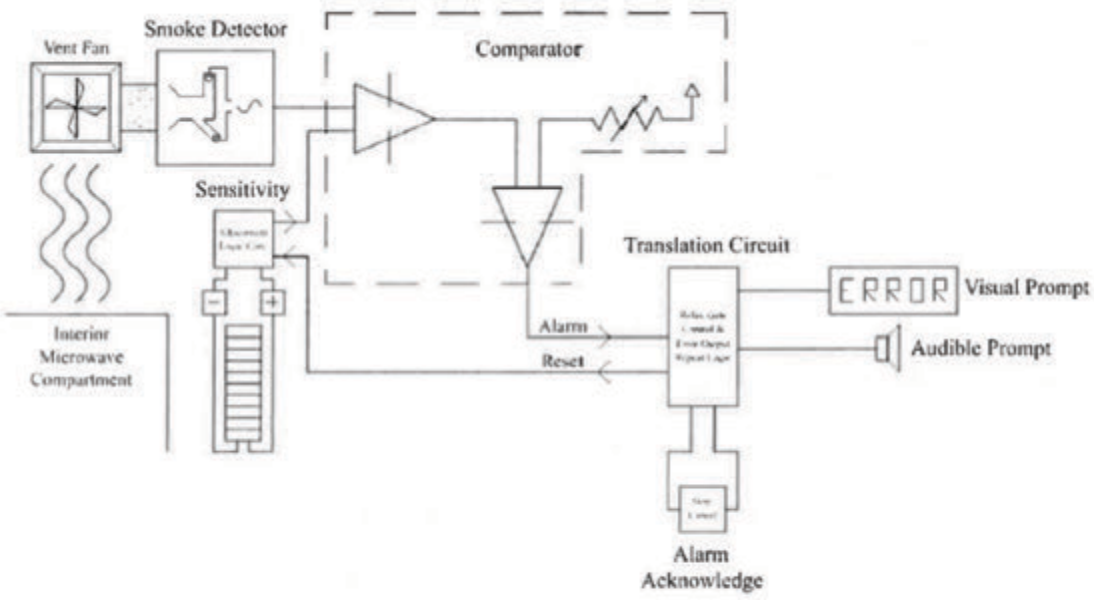

Figure 4

The smoke detection unit is also in operative connection with the circuit (i.e., "control circuit"). As explained by ISDU, the integrated smoke detection unit interfaces with the microwave logic to control shutting down and alert

the user: "Once smoke is detected, we will send a signal that lets a circuit interrupt the power to the microwave through the use of a 'soft' power-off function already in use by the microwave logic. This will stop the microwave while simultaneously sounding an alarm." Ex. 1012 at 6; Ex. 1002 ¶[153].

(B) Ueda

Ueda discloses a gas sensor 30 positioned in an interior of a microwave oven and in connection with the control circuit. Ex. 1013 at 2:25-34. As shown in Figure 1 below, the microwave 10 includes a housing 11, and a gas sensor 30 located within the housing 11 but outside of the heating chamber 15. *Id.* at 2:4-10; Ex. 1002 ¶[154].

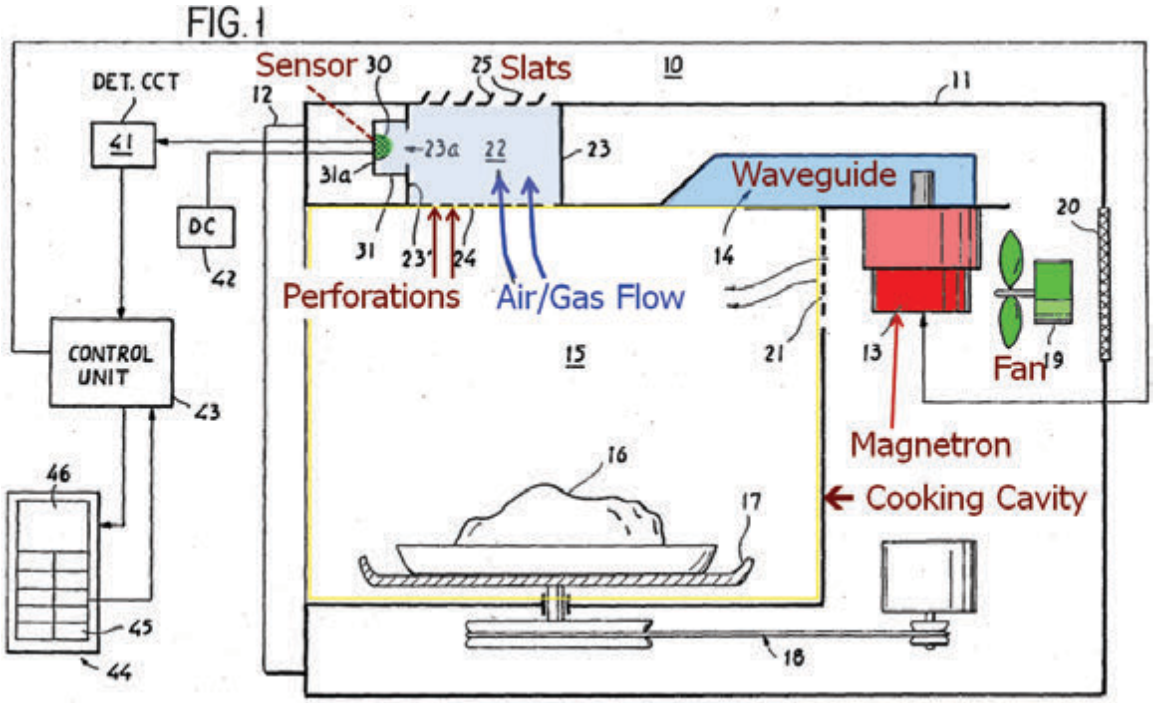

Ex. 1013 at Fig. 1 (annotated).

The gas sensor 30 is mounted in a position to detect the concentration of gases inside the microwave housing 11. *Id.* at 2:25-34. In one embodiment, the gas sensor is a smoke sensor. Ueda discloses: "[a] further suitable sensor is of a gas sensor composed of SnO_2which is available from Figaro Engineering Inc. (Japan)." *Id.* at 2:54-56. The SnO_2 sensor from Figaro Engineering Inc. is a smoke sensor. Ex. 1002 ¶¶[155-64].

Finally, Ueda discloses the smoke sensor being in operative connection with the control unit (i.e., "control circuit"). As shown in Figure 1 above, the smoke sensor 30 is in communication with detector circuit 41, which is in communication with control unit 43. The sensor may terminate the cooking operation by sending a signal to the control unit. Ex. 1013 at 3:9-17.

(C) Smith

Smith discloses a gas sensor (i.e., "smoke sensor") positioned in an interior of a microwave oven. Ex. 1002 ¶¶[165-66]. Smith describes the need to detect smoke and increasing gas concentration prior to combustion: "However, before actually reaching the ignition point, the food begins to char, smoke or smolder, resulting in a second period of relatively rapidly increasing gas concentration in the circulating air, comparable to that rate of increase which characterizes the normal cooking period." Ex.1014 at 3:51-54. Referring to Figures 1 and 2 below, which are different angles of the

microwave oven, Smith discloses a gas sensor (i.e., "smoke sensor") positioned in an interior of the microwave oven:

> Means for sensing the concentration level of such gases in the air leaving the cavity is provided in the form of a gas sensor 52 disposed in the air flow path between perforations 48 in cavity wall 28 and vent openings 50 in cabinet wall 20. … Sensor 52 in the illustrative embodiment of FIG. 2 is a gas sensor readily commercially available from Figaro Engineering, Inc., identifiable as Model TGS No. [816][4].

Id. at 3:6-16.

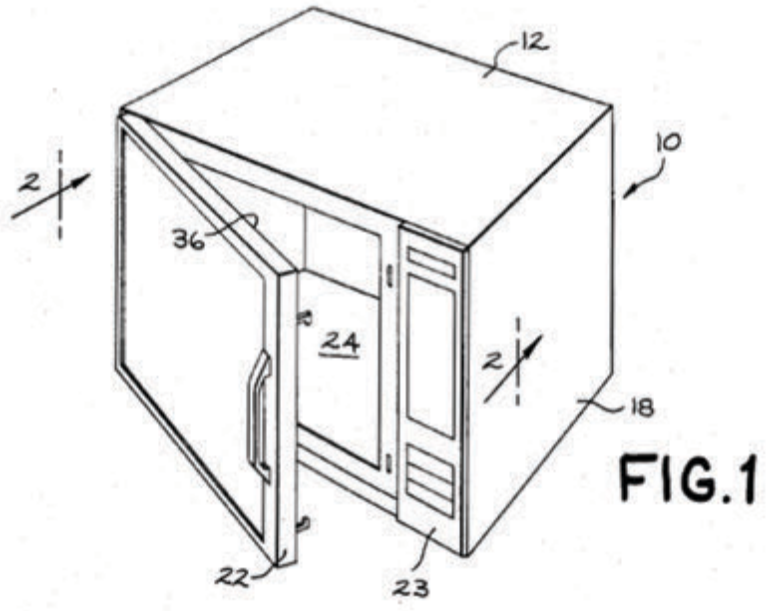

Id. at Fig. 1.

[4] *See* Ex. 1002 ¶[167-169] (discussing typographical error).

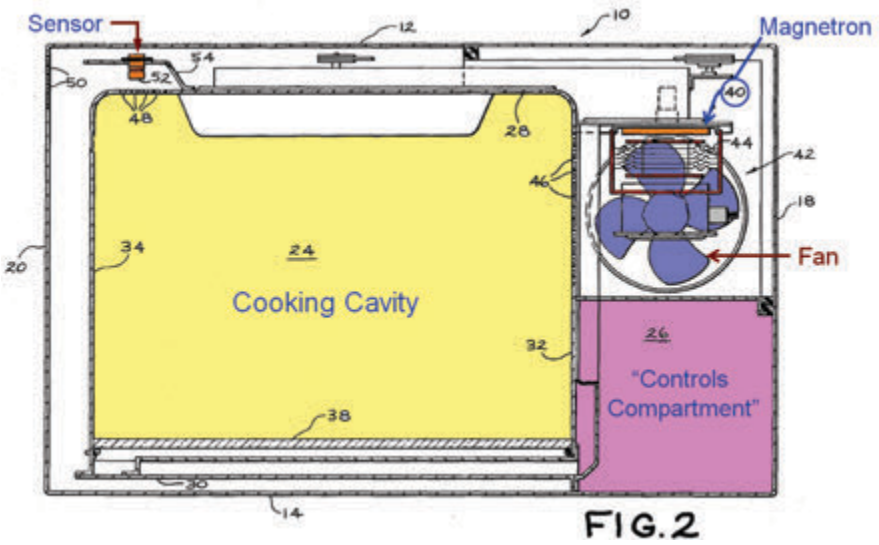

Id. at Fig. 2 (annotated).

The Model TGS No. 816 sensor from Figaro Engineering Inc. is a smoke sensor. Ex. 1002 ¶¶[167-69]. Additionally, referring to FIG. 4 (below), Smith discloses the gas sensor is in operative connection with the microwave microprocessor (i.e., "control circuit"):

> gas sensor 52 is incorporated in a microprocessor-based control arrangement . . . . The circuit of FIG. 4 includes a gas sensing circuit 60 for sensing the concentration level of gases in the circulating air as it exits cooking cavity 24 and generating a voltage signal having a magnitude representative of the sensed gas concentration level.

Ex. 1014. at 4:61- 5:3; Ex. 1002 ¶[170].

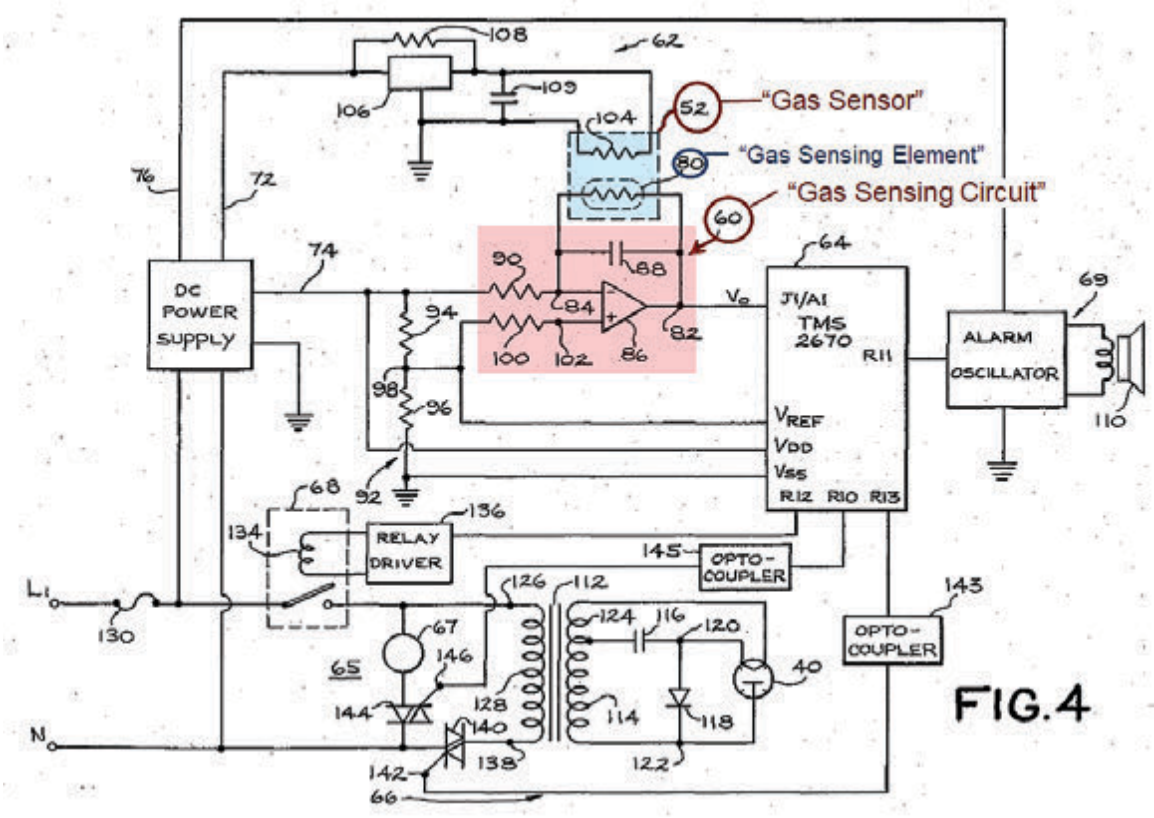

Id. at Fig. 4 (annotated).

(D) Butt

Butt addresses the problem of fires caused by kitchen appliances: "[t]he National Fire Protection Association reports that between the years 1999-2002, for example, there were 114,000 reported home fires associated with cooking alone." Ex. 1015 at 1:22-25. As shown in Figure 1A (reproduced below), the system taught by Butt controls power to an electrical kitchen appliance 18 coupled to a controller 20, where the Butt system includes a smoke detector 14, panic/reset button 12, and a wireless transmitter. *Id.* at 4:29-34; Ex. 1002 ¶[171].

Figure 1A

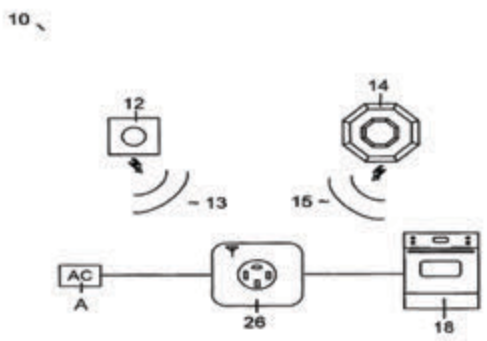

Ex. 1015 at Fig. 1A.

Finally, Butt teaches a smoke detector is in operative connection to the controller (i.e., "control circuit"). If the detector detects smoke then a signal is sent to the controller to interrupt power to the kitchen appliance:

> If the detector 14 detects the presence of smoke, then in the wireless embodiment illustrated in FIG. 1 an RF signal 15 is transmitted and is received by the controller 20.

Id. at 4:53-55; Ex. 1002 ¶[172].

"Further, in the embodiment shown in FIG. 1B [reproduced below], the controller 20, detector 14, and panic/reset button 12 are all wired together. The wiring takes the place of the RF signals 13, 15 illustrated in FIG. 1A." Ex. 1015 at 5:1-4; Ex. 1002 ¶[173].

Figure 1B

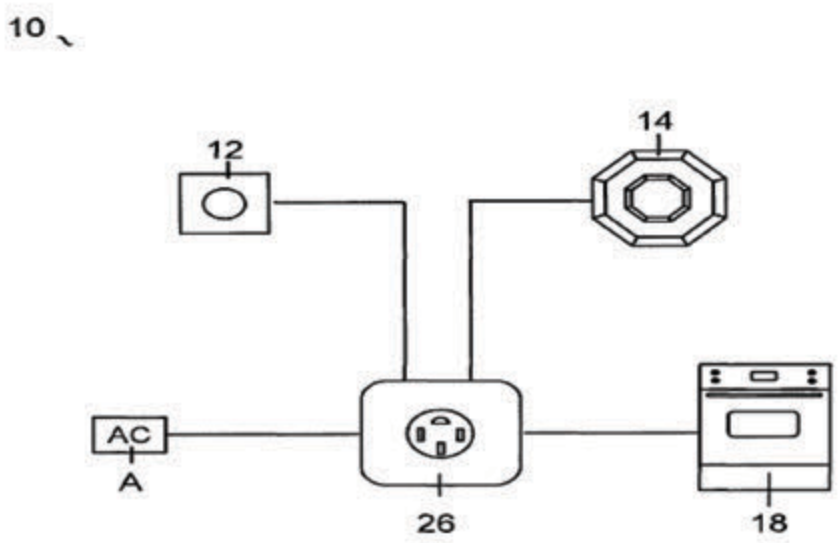

Ex. 1015 at Fig. 1B.

iv. *Shut Down Function*

(A) ISDU

ISDU discloses that when smoke is detected, the microwave oven operation is disabled and the user is alerted to the smoke:

> [W]hen smoke is detected during microwave operation, the device will temporarily disable microwave operation and let the user know that the food has begun to smoke or even burn… The product, Integrated Smoke Detection Unit (ISDU) for commercial microwave ovens, will work in the following way. The presence of particulate during cooking will trigger our

> device thus sounding an alarm and halting microwave operations.

Ex. 1012 at 1; Ex. 1002 ¶¶[174-75].

(B) Ueda

Ueda discloses the gas sensor is configured to cause cooking power to be withdrawn from the microwave oven based on the output of the gas sensor: "[a] sensor located in the enclosure detects the diffusing substance to deenergize the heater when the sensor develops a voltage indicating a predetermined condition of the heated material." Ex. 1013 at 1:40-44; Ex. 1002 ¶[176].

Further, it discloses that the control unit will stop the cooking operation upon a signal from the detector circuit, which is in communication with the smoke sensor (*see* Section VI.B.2.b, Figure 1):

> [T]he apparatus further includes a control unit 43 and a data-entry/display panel 44 having a plurality of keys 45 and a liquid-crystal display 46. Control unit receives data from the data-entry/display panel 44 to initiate a cooking operation according to the contents of input data by energizing magnetron 13 via a driver 47 ***and further receives an output signal from detector circuit 41 to terminate the cooking operation***.

Ex. 1013 at 3:9-17 (emphasis added); Ex. 1002 ¶[177].

Finally, referring to FIG. 5 (reproduced below), Ueda discloses that

when a certain sensor threshold has been reached, the circuit will withdraw power from the magnetron to shut down the microwave cooking operation:

> If the operation is in automatic mode, block 65 is executed by comparing the digitized value of absolute humidity with a predetermined value P. . . . [When] the humidity value P is reached in block 65, [] control advances to block 66 to multiply the timer count value T by a constant K (which ranges from zero to 3 depending on the material of the foodstuff being cooked). Timer count value T which is obtained by block 71 is compared with a set value Tc which, in the automatic mode, is determined by the material of the foodstuff dictated by the input data. ***Blocks 67 and 68 are executed repeatedly until K x T becomes equal to Tc. Blocks 69 and 70 follow to shut down magnetron 13***, operate buzzer 57 and reset timer count T to zero and allow control to return to block 60.

Ex. 1013 at 4:1-17 (emphasis added).

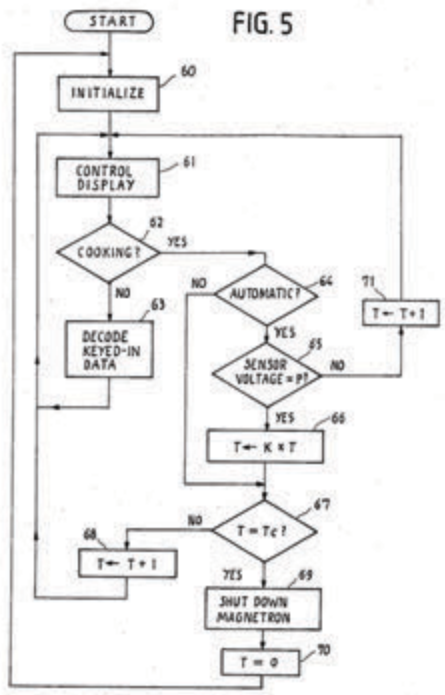

Id. at Fig. 5; Ex. 1002 ¶¶[178-79].

(C) Smith

Smith discloses a gas sensor in operative connection with a microprocessor (i.e., "control circuit") that can cause power to be withdrawn prior to the gas sensor sensing at least one change in an amount of smoke sensed by the smoke sensor. Figure 5 (reproduced below) shows the control algorithm the microprocessor implements for smoke detection. Ex. 1002 ¶¶[180-81]. Smith states:

> Upon detection of a rate of change greater than reference AL, (Yes to In-quiry 180) a signal is provided at output port R12 causing power control relay 68 to open, thereby deenergizing magnetron 40 and the blower motor 67 (Block 182). …The

> deenergizing of both the magnetron and the blower motor using either technique in effect turns off power to the oven. …. By detecting the occurrence of a rapid increase in the rate of change of concentration level by the hereinbefore described method, magnetron 40 is deenergized 35 prior to the load being heated in the oven reaching its actual combustion temperature, thereby anticipating a potential fire condition and preventing the load from reaching its combustion point.

Ex. 1014 at 9:17-39

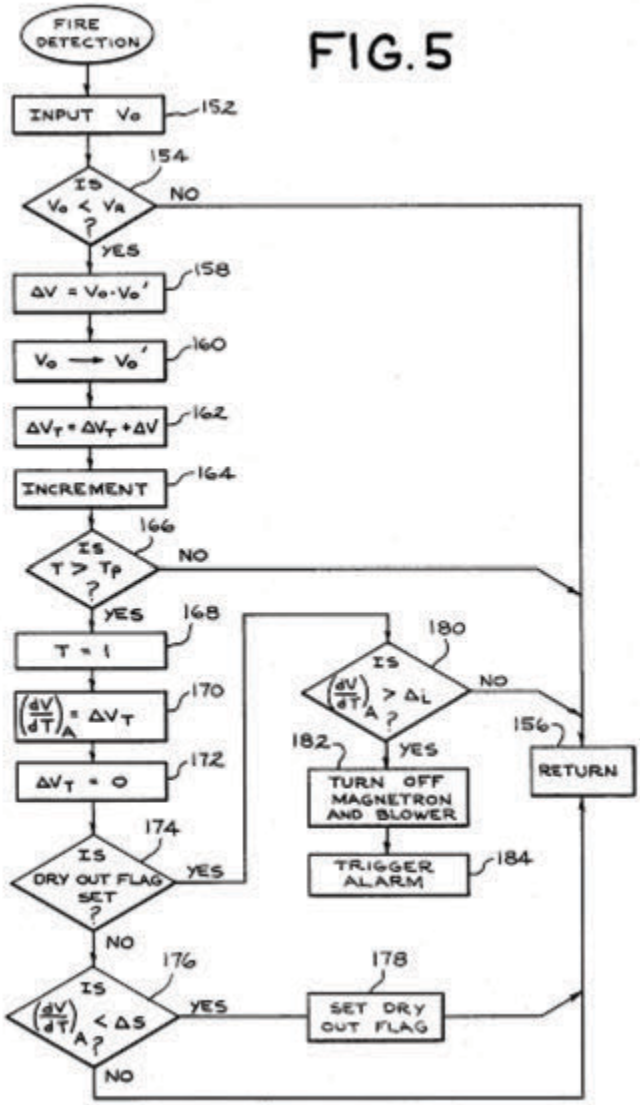

Id. at Fig. 5.

(D) Butt

As shown in FIG 1A (reproduced below), Butt teaches a detector (i.e., "smoke sensor") interrupting power to the appliance prior to the set end time of the cooking session upon the detector sensing smoke. For example, Butt teaches sending a control signal to a relay to prevent the flow of electricity to

the electrical cooking appliance:

> If the detector 14 detects the presence of smoke, then in the wireless embodiment illustrated in FIG. 1[A] [shown below] an RF signal 15 is transmitted and is received by the controller 20. Upon receiving the signal, ***the controller interrupts the AC power supply to the appliance 18 and consequently shuts the appliance 18 off***.

Ex. 1015 at 4:53-67 (emphasis added); Ex. 1002 ¶¶[182, 184].

Figure 1A

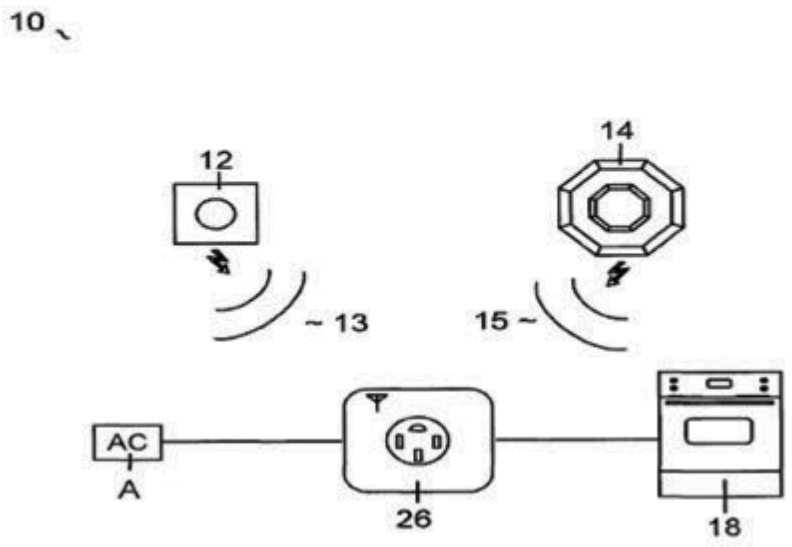

Ex. 1015 at Fig. 1A.

Butt further described that it was previously known to have a safety shut-off system to switch off an electrical appliance upon detecting a signal indicative of a fire: "a detector for detecting a signal indicative of fire, such as

smoke; a switch that connects an appliance, such as an electric range, to an AC power supply; and a controller that opens the switch upon receiving a signal from the detector." Ex 1015 at 1:34-36; Ex. 1002 ¶¶[183, 185].

v. *Reset Enable Function*

(A) ISDU

ISDU discloses a smoke detection device ("i.e., smoke sensor") configured to reset and re-enable the microwave and smoke detection device after ending the cooking session due to the Shut Down Function:

> Triggering the smoke detector will output a number of alarm conditions to alert the user. The alarm state will consist of a suspension of normal microwave functions including the cessation of magnetron operation, a visual alert to be displayed on the integrated microwave LCD, and an audible alert. . . . ***Acknowledgement of the alarm state will reinstate all normal microwave functions and reset the smoke detector circuit for further use***.

Ex. 1012 at 8-9 (emphasis added). As shown above, ISDU discloses a microwave oven resetting to enable further cooking at least in part to the smoke sensor no longer sensing the smoke. *Id.*; Ex. 1002 ¶¶[186-88].

(B) Ueda

Ueda recites the gas sensor (i.e., "smoke sensor") is configured to be reset after the current cooking session to deliver cooking power in the next

subsequent cooking session. For example, following the automatic shutdown of the of the microwave magnetron at block 69 (Figure 5, reproduced below), the microwave logic is re-initialized to block 60 to prepare for a further cooking session: "Blocks 69 and 70 follow to shut down magnetron 13, operate buzzer 57 and reset timer count T to zero and allow control to return to block 60 ["***Initialize***"]." Ex. 1013 at 4:15-17; Ex. 1002 ¶[189].

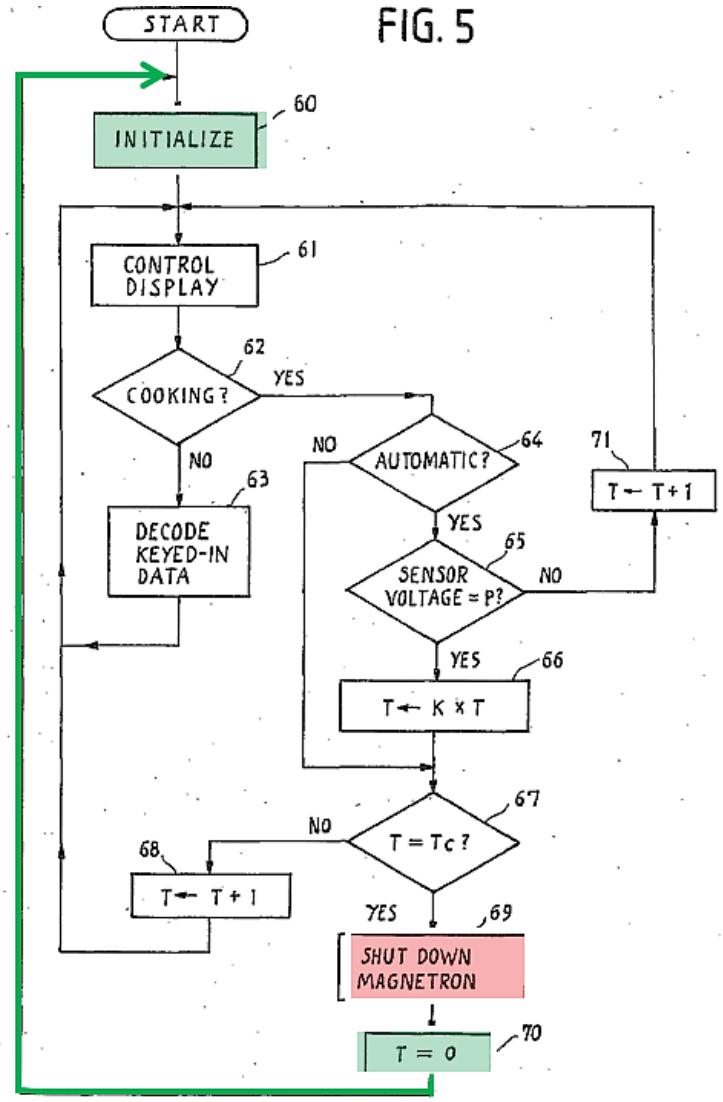

Ex. 1013 at Fig. 5 (annotated).

Further, Ueda discloses the microwave being reset at least in part to no longer sensing the smoke because as shown in FIG. 5, a subsequent automatic cooking session (block 66) following reinitialization (block 60) will further check the sensor voltage (block 65) to determine if it has reached the sensor voltage threshold: "Blocks 67 and 68 are executed repeatedly until K x T becomes equal to Tc. Blocks 69 and 70 follow to shut down magnetron 13, operate buzzer 57 and reset timer count T to zero and allow control to return to block 60." *Id.* at 4:13-17; Ex. 1002 ¶¶[190-91].

(C) Butt

Butt teaches that a user may press the panic/reset button to restore power to the appliance: "when the danger posed by the fire has passed, a user can press the panic/reset button 12, which will transmit an RF signal 13 to the controller 20, and the controller 20 will restore the AC power supply to the appliance 18." Ex. 1015 at 4:63-67; Ex. 1002 ¶[192].

The system of Butt will reset at least in part to the smoke sensor no longer sensing the smoke by checking to determine if the smoke alarm is still present following reset:

> Following the user's pressing the panic/reset button 12, the microcontroller 36 checks to see whether the smoke alarm 14 is active (block 62). If not, the microcontroller 36 sends a signal to the relay driver 42 to close the relay 44 (block 64), and enters a

> loop during which time it simply waits for either the signal 15 indicating that the smoke alarm 14 has detected Smoke or the signal 13 indicating that the panic/reset button 12 has been pressed (blocks 66 and 68).

Ex. 1015 at 6:53-60; Ex. 1002 ¶¶[193-94].

As shown in FIG 7 (reproduced below), when the panic/reset button is pushed, the device enters a loop during which the smoke detection circuit is re-enabled to check for smoke:

> The relay 44 remains open until the panic/reset button 12 is pressed (block 74), following which the microcontroller 36 closes the relay 44 and again enters the loop during which it waits for the smoke detector 14 to detect smoke, for the panic/reset button 12 to be pressed, for the low-battery signal, or for the system to enter a lockout state, as described below (blocks 66, 68, 69 and 80).

Ex. 1015 at 7:15-21; Ex. 1002 ¶[195].

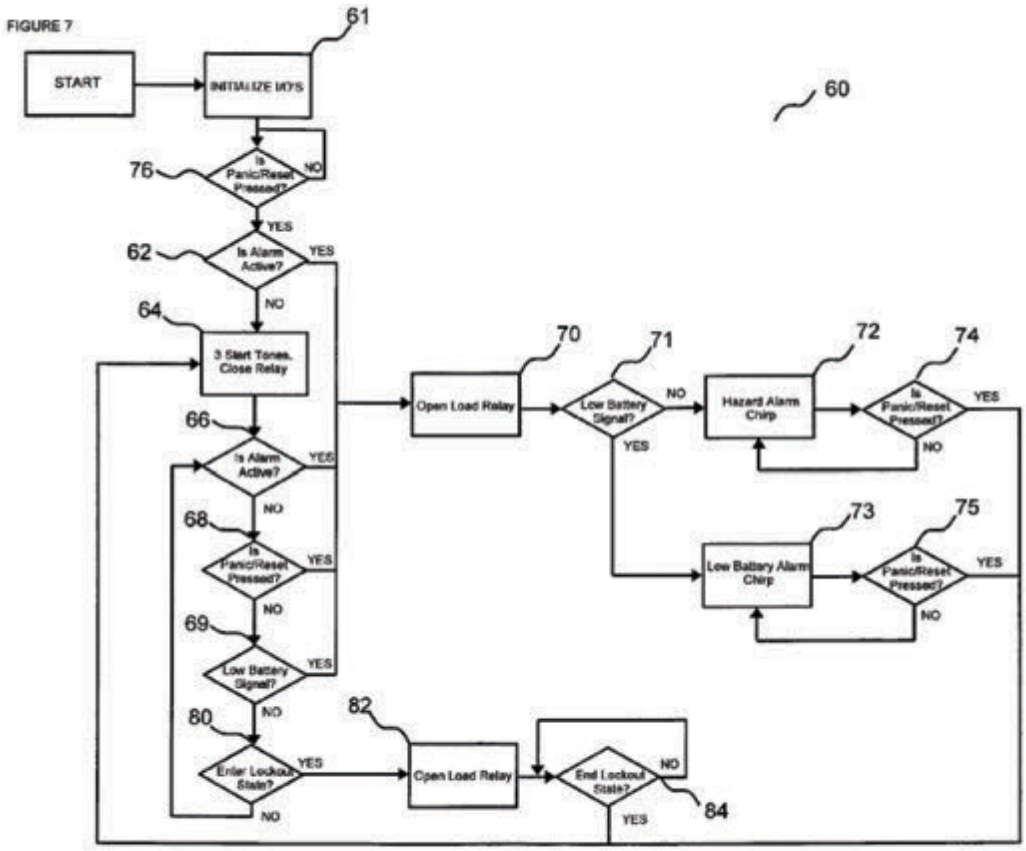

Ex. 1015 at Fig. 7.

(D) Smith

Smith discloses an electrical circuit as shown in FIG 4 (annotated below), which is configured to allow the microprocessor 64 to cycle power to the microwave magnetron. For example, this can be done by sending digital signals to a control the position of a relay in line with the magnetron power supply:

Upon detection of a rate of change greater than reference ΔL,

> (Yes to Inquiry 180) ***a signal is provided at output port R12 causing power control relay 68*** to open, thereby de-energizing magnetron 40 and the blower motor 67 (Block 182). . . . The de-energizing of both the magnetron and the blower motor using either technique in effect turns off power to the oven.

Ex. 1014 at 9:17-28 (emphasis added); Ex. 1002 ¶¶[196-97].

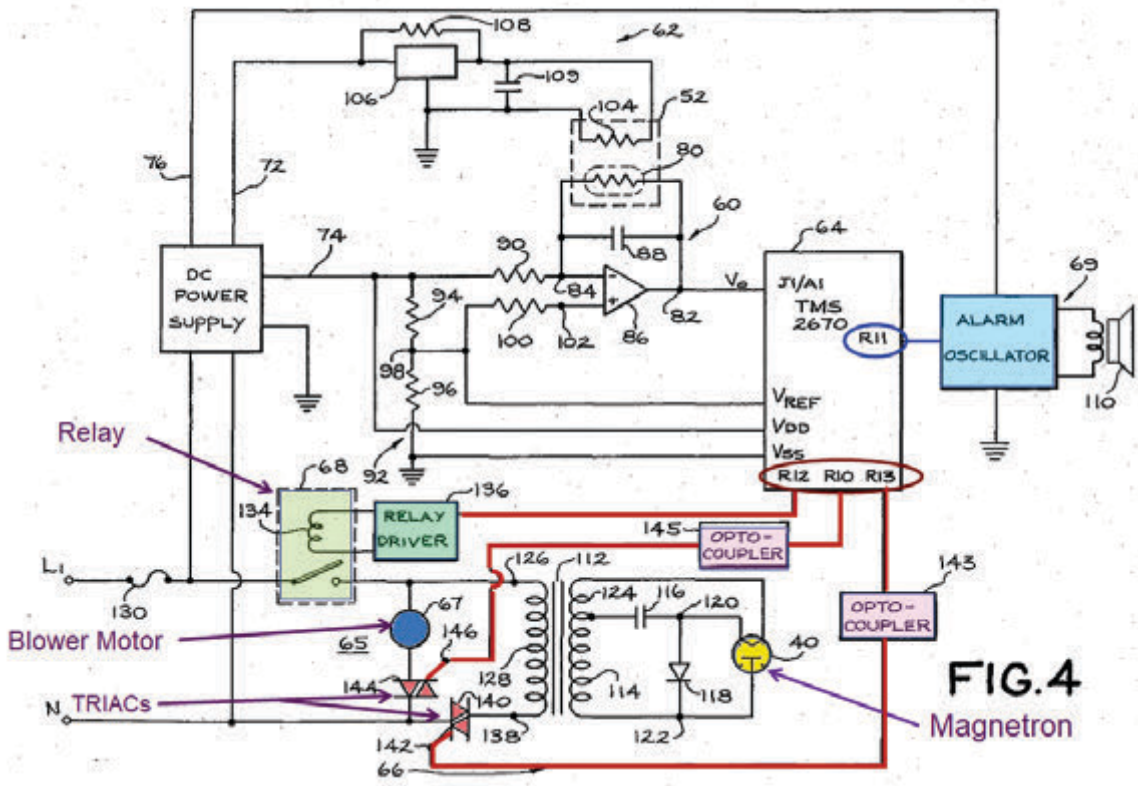

Ex. 1014 at Fig 4 (annotated).

The disclosed power control relays are electronically controlled to open or shut by microcontroller 64. Ex 1002 ¶¶ [196-97].

b. *The Dependent Claims (Claims 10 and 12)*

i. *Power Supply Outlet*

(A) Emma

As shown in Figure 2 (annotated below) Emma discloses a system 1

that includes refrigerator 3 and microwave oven 2. Emma discloses the microwave oven has a power supply outlet on a microwave oven: "a first power supply outlet provided on the microwave oven." Ex. 1011 at claim 1. "Refrigerator 3 is connected to microwave oven 2 by power cord 7 to refrigerator receptacle 15, shown at the rear of the microwave 2 in FIG. 2." *Id.*, ¶[0026]; Ex. 1002 ¶¶[198-99].

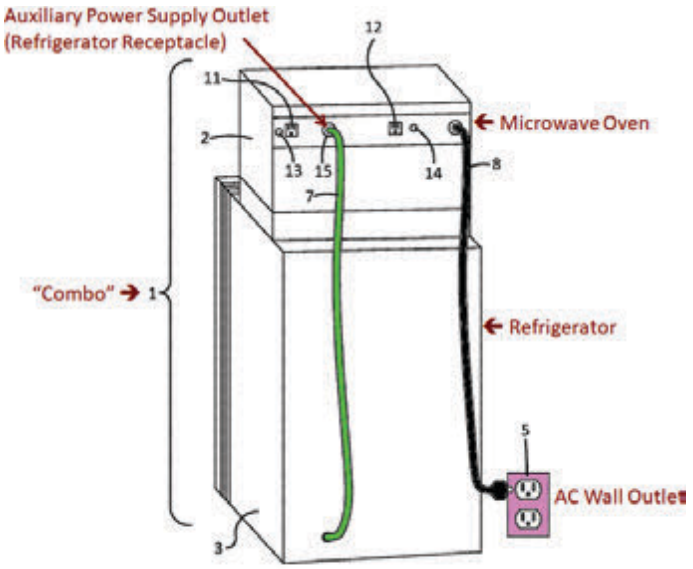

FIGURE 2

Ex. 1011 at Fig. 2 (annotated).

Emma also discloses a microprocessor (i.e., "control circuit") that is in operative connection with the refrigerator receptable or first power supply outlet (i.e., "power supply outlet"). *Id.* Emma Claim 1 recites: "wherein the control processor is configured to enable or disable power to the microwave

oven, the first power supply outlet and the second power supply outlet, according to an algorithm in the control processor." *Id.* at claim 1. Further, Emma states: "[c]ontroller 4 may be programmed to manage the power to the components of the system to avoid overload conditions, while minimizing disruptions in the use of an individual appliance." *Id.*, ¶[0030]; Ex. 1002 ¶[200].

An example control circuit is provided in Emma Figure 4 (reproduced below). It shows microwave controller 4 electrically controlling relays 19 and 20 for cycling power to refrigerator receptacle 15 and the auxiliary outlets 11 and 12:

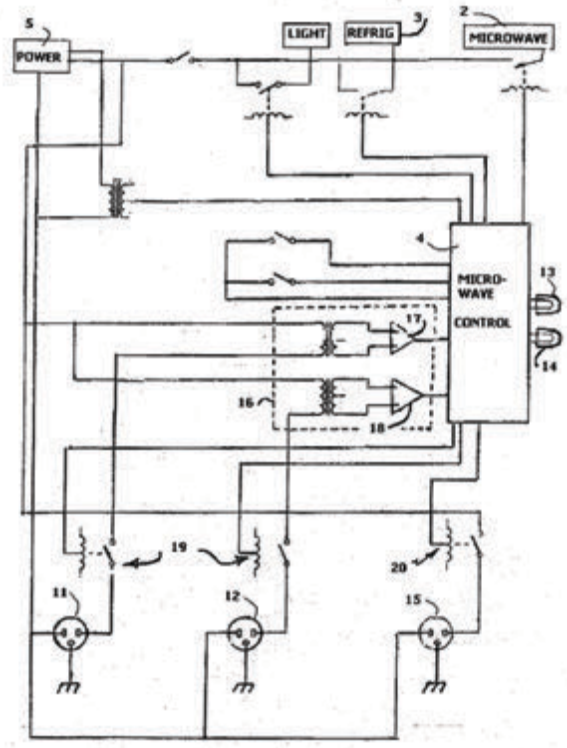

FIGURE 4

Ex. 1011 at Fig. 4.

ii. *Refrigerator*

(A) Emma

Emma discloses a refrigerator connected to the refrigerator receptacle (i.e., "power supply outlet") which is connected to a power source: "a refrigerator connected to the source of power by connection to the first power supply outlet...." *Id.* at claim 1. As shown below in Figure 2, the "[r]efrigerator 3 is connected to microwave oven 2 by power cord 7 to refrigerator receptacle 15, shown at the rear of the microwave 2 in FIG. 2." *Id.*, ¶[0026]; Ex. 1002

¶[201].

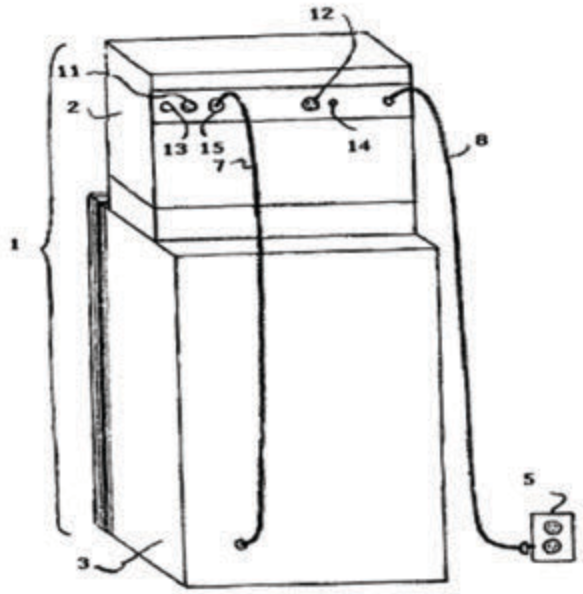

FIGURE 2

Ex. 1011 at Fig. 2.

Emma also discloses a compressor. "When power to the microwave is demanded, the compressor is disabled for a preset minimum period." *Id.* at [0011]. Additionally, Emma discloses: "[t]he duty cycle of a refrigerator used in these combined systems includes a current spike that occurs during the first few seconds of operation. This is the startup current for the refrigerator compressor and is considerably reduced, as the compressor obtains its operational speed." *Id.* at [0005]; Ex. 1002 ¶[202].

iii. *Withdraw and Deliver Electrical Power*

(A) Emma

Emma discloses a microprocessor ("control circuit") that is operative to withdraw power to the refrigerator when the microwave is in use. For example, Emma recites: "wherein the algorithm causes the control processor to: disable the refrigerator and the second power supply outlet, when the microwave demands power." Ex. 1011 at claim 1. Emma further recites: "[r]efrigerator 3 is generally subject to control by the microwave microprocessor controller 4 of the microwave oven 2." *Id.*, ¶[0026]. "Controller 4 may be programmed to manage the power to the components of the system to avoid overload conditions, while minimizing disruptions in the use of an individual appliance." *Id.*, ¶[0030]; Ex. 1002 ¶¶[203, 205].

For example, as shown in the below Figure 7, when the Microwave demands cooking power it will first disable power to the Refrigerator and the auxiliary outlets to provide it necessary power. Ex. 1011 ¶[0038] This is because "priority is given to the power demands of the microwave oven." *Id.* "Use of the [auxiliary] receptacles 11, 12, and [refrigerator receptacle] 15 are,

therefore, disabled during microwave operation."[5] *Id.*; Ex. 1002 ¶[203].

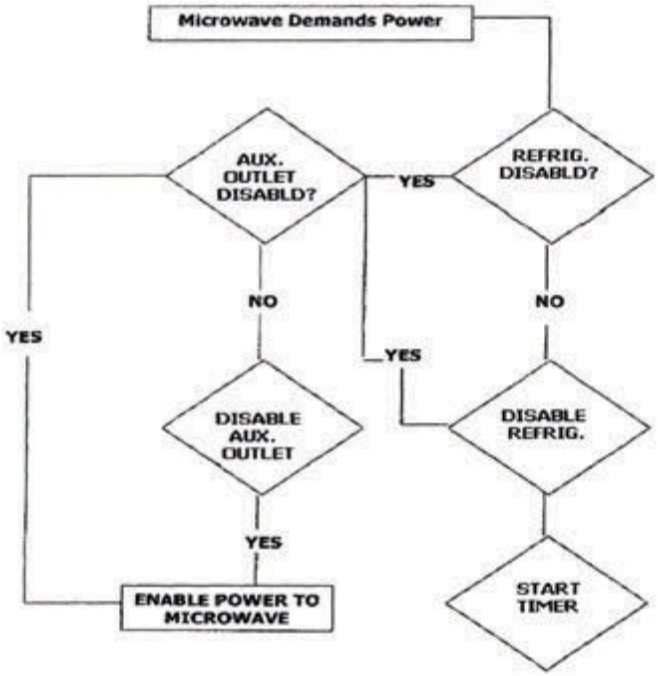

FIGURE 7

Ex. 1011 at Fig 7.

As another example, Figure 6 (reproduced below) is a processor operation model that shows what happens when the refrigerator demands power:

[5] For additional reference, *see* Figure 2 in VI.C.*1.b.* ii. (1).

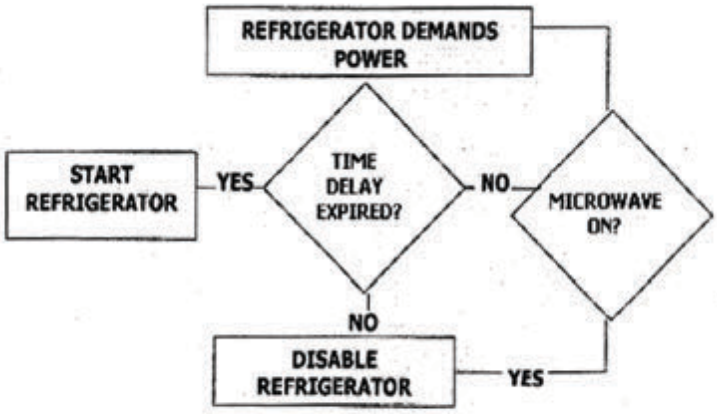

FIGURE 6

Id. at Fig. 6; Ex. 1002 ¶[206].

As shown above, "[i]f the microwave is on [when the refrigerator demands power], "the recycling of the refrigerator will be delayed. If the microwave was on and subsequently cycled off, the clock 21 must be checked to determine if the restart can occur." Ex. 1011 ¶[0037].

Because priority is given to the power demands of the microwave, Emma further discloses the microprocessor ceases electrical power to the compressor based on those demands: Specifically, "[i]f the refrigerator 3 is under power when the microwave 2 is turned on, the power, to the refrigerator is turned off and clock 21 begins to count for a predetermined period during which the compressor of refrigerator 3 cannot be restarted." *Id.*, ¶[0033]. Conversely, Emma discloses the microprocessor may enable power to the compressor and refrigerator when the microwave is not in use. Ex. 1002

¶¶[203-06.

Figure 3 (reproduced below) is a power distribution block diagram that shows the hierarchy of how the microprocessor distributes power to the components of the system, with the microwave oven 2 prioritized.

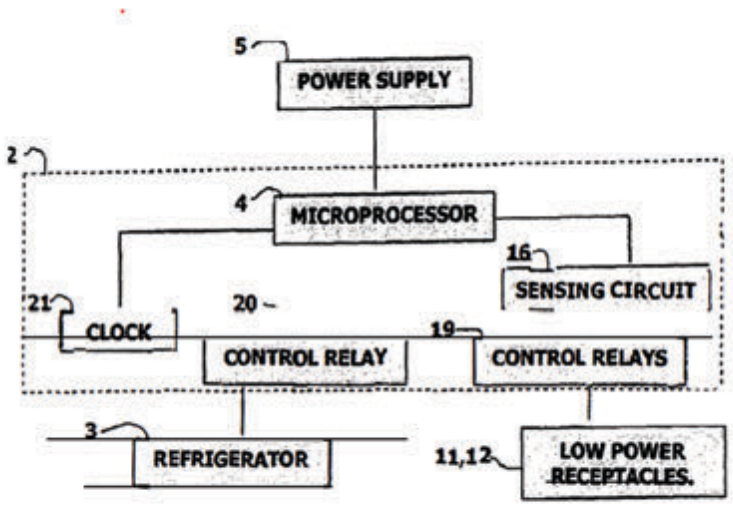

FIGURE 3

Ex. 1011 at Fig. 3; Ex. 1002 ¶[205].

Emma Figure 4 discloses a control circuit providing for digitally operating relays 19, 20 for controlling the low power auxiliary outlets 11, 12 and refrigerator receptacle 15:

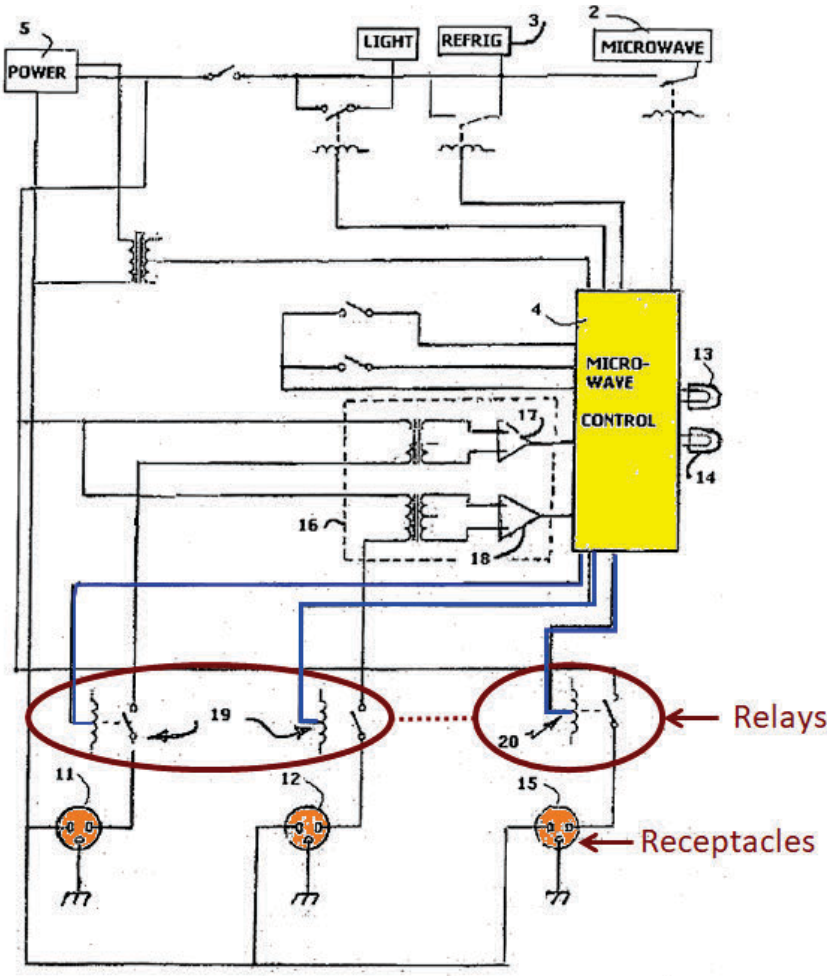

FIGURE 4

Ex. 1011 at Fig. 4 (annotated); Ex. 1002 ¶[204].

2. Explanation of Asserted Grounds and Rationales Supporting a Conclusion of Obviousness

a. ***Grounds 1 and 2: Anticipation by and/or Alternatively Obvious in view of ISDU***

Ground 1 is that ISDU anticipates the Independent Claims. As shown in Section VI.C.1., ISDU discloses all elements of the Independent Claims and thus anticipates those claims. Ex. 1012; Ex. 1002 ¶[208].

The only element of Claim 11 which might be argued is not expressly present in ISDU is the placement of the smoke sensor in, i.e., "interior" to, the microwave oven. Should the Board decide that element is not shown either expressly or inherently in ISDU, under Ground 2 Petitioner asserts it would have been obvious to modify the placement of the ISDU smoke sensor to be in the "interior" of the microwave. *Id.*, ¶[208].

There are numerous reasons that a POSITA would make a modification in ISDU to position the smoke detection sensor in the "interior" of the microwave oven. *Id.*, ¶[210]. First, based on the teaching and suggestion provided in ISDU, it would have been obvious to a POSITA to place the smoke sensor in the interior of the microwave because that would place it in closer proximity to the source of smoke (initiating at the food being heated). *Id.* It is a trivial design choice to place the disclosed smoke sensor inside or interior to the microwave and, it is consistent with the express teaching of ISDU that it is integrated with the microwave. *Id.* Additionally, ISDU specifically teaches this. When referring to prior art, it states: "[w]ith the introduction of a smoke detection circuit *inside* the microwave the consumer will be alerted, by a louder more intense alarm, that they have overcooked their food or that there is another cause of smoke *inside* the microwave." Ex. 1012 at 4.

Based on ISDU's teaching and/or the motivation to have the smoke sensor be optimally positioned in a location to detect generated smoke close to its source, a POSITA would have placed, or at least tried to place, the smoke detection sensor inside the microwave, i.e., in an interior area therein, as opposed to outside/around the microwave. Ex. 1002 ¶[211]. The POSITA would have had a reasonable expectation of success in detecting smoke more quickly compared to attempting to detect smoke using a smoke detector positioned further away from the microwave. *Id.*

Additionally, it would have been "obvious to try" placing the sensor inside the microwave as opposed to outside/around the microwave oven, as there are only a finite number of identified, predictable solutions (i.e., just two feasible: inside or outside), with a reasonable expectation for success. ISDU emphasized that at the time there was a market need to prevent fires (as shown in VI.C.1.a.i.(A)) but only a finite number of solutions for integrating smoke sensors into microwave ovens. Ex. 1002 ¶[212]. Further, it would have been obvious to integrate any smoke sensor inside a microwave oven to create a commercially integrated package for sale and shipping. *Id*. A POSITA would have pursued trying to place the smoke detection sensor inside the microwave oven with a reasonable expectation of success which would have been grounded on the disclosures of the prior art. *Id*.

Lastly, it would have been obvious to modify any embodiment in ISDU having the smoke detector outside the microwave by physically placing the smoke detection sensor unit inside as it entails only the substitution of one known element for another (e.g., placing the sensor either inside or outside the microwave and close to the source of the smoke), and the substitution would yield predictable results because a POSITA would expect to obtain a higher sensitivity with faster detection placing the smoke detector closer to the source of the smoke, that is inside the Microwave. *Id.*, ¶[213].

As discussed, it was well understood from the art how a microwave oven and a smoke detection sensor work (the smoke detector should be in proximity to the cooking operation to detect the smoke), and a POSITA would have substituted the placement of the smoke sensor inside as opposed to outside/around the microwave oven and obtained predictable results. *Id.*, ¶[214].

b. ***Grounds 3 and 4: Anticipation by and/or Alternatively Obvious in view of Ueda***

Ground 3 is that Ueda anticipates the Independent Claims. As shown in Section VI.C.1., Ueda discloses all elements of the Independent Claims and thus anticipates those claims. Ex. 1013; Ex. 1002 ¶[215]. The only element that arguably is not expressly described is the claimed smoke sensor. However, Ueda at least inherently teaches this limitation. Ex. 1002 ¶[159-64].

Ueda discloses shutdown sensor may be a SnO_2 gas sensor: "[a] further suitable sensor is of a gas sensor composed of SnO_2 which is available from Figaro Engineering Inc. (Japan)." Ex. 1013 at 2:54-56. Ueda discloses detecting gas. The Figaro sensor was also known to be a smoke sensor. Ex. 1002 ¶¶[159-64, 217].

Should the Board decide Ueda does not expressly or inherently anticipate the Independent Claims because it does not explicitly refer to smoke, at a minimum and alternatively, under Ground 4, the Independent Claims are obvious in view of Ueda. It would have been obvious to use the described Ueda gas sensor to detect smoke, i.e., the Figaro SnO_2 sensor disclosed in Ueda. Ex. 1002 ¶¶[216-19]. Ueda itself teaches its microwave/sensor arrangement is designed to receive smoke: "[t]he size of perforations 24 and the slits is such that microwave energy does not leak out of duct 22 ***while permitting a sufficient amount of smoke to escape through them***." Ex. 1013 at 2:17-20 (emphasis added).

A person of ordinary skill in the art would understand that smoke is composed of small solid particles, liquid vapor, and gases, such as carbon dioxide, carbon monoxide, and other volatile and involatile gases. Ex. 1002 ¶[217]. It was well understood at the time of Ueda's filing that a SnO_2 sensor is used to detect typical components of smoke likely to be generated from

food. *Id.* Therefore, a POSITA would have had more than a reasonable expectation of success by using the disclosed Ueda gas sensor for the detection of smoke. *Id.* Such a substitution would have a similar sensor output as the gas sensor used in the embodiment described with reference to FIGS. 1 and could be substituted into the circuit of FIG. 3 for sensor 30 such that the logic flow diagram of FIG. 5 would function similarly in checking for the smoke sensor voltage of block 65. *Id.*

The gas sensor disclosed in Ueda reacts to a threshold limit, in that the detection of gas above the threshold leads to action by the control circuit (e.g., shutting down the cooking appliance). *Id.*, ¶[218]. From a control point of view, this operation will be the same irrespective of whether smoke, gas, or humidity detection is used for sensor 30, because either type produces a voltage signal representative of the effluent concentration. *Id.* The control circuit responds to this voltage rising above a known threshold irrespective of what the sensor is detecting, because the sensor's output will always be a voltage (or a current that the control circuit converts into an equivalent voltage). *Id.*

Using the Ueda Figaro gas sensor to detect the components of smoke is nothing more than a substitution of one known use over another known use of that sensor, that yields predictable results to a POSITA. *Id.*, ¶[219].

c. *Grounds 5 and 6: Anticipation by, and/or Obvious in view of Smith*

Ground 5 is that Smith anticipates the Independent Claims. As shown in Section VI.C.1., Smith discloses all elements of the Independent Claims and thus anticipates those claims. Ex. 1014; Ex. 1002 ¶[220]. The only element Smith arguably does not expressly disclose is resetting the microwave oven following the smoke sensor no longer sensing smoke, (i.e., Reset Enable Function), Smith inherently teaches this limitation. *Id.*, ¶¶[221-23]. For one, Smith is designed to shut down before actual combustion. *Id.*, ¶[222]. It would not make sense that the microwave is not reset for subsequent use merely because the food started to smoke. *Id.* Also, the design described by Smith is non-destructive in that the designed mechanism to shut down the microwave during a smoke sensor event are configured to be reversible by the Smith controller through the use of an electronically controlled relay, a non-permanent design for removing and resetting power to the microwave magnetron. *Id.*

Should the Board decide Smith does not expressly or inherently anticipate the Independent Claims, at a minimum and alternatively, under Ground 6, the Independent Claims are obvious in view of Smith. It would be obvious to modify Smith to reset the microwave oven following the smoke

sensor no longer sensing smoke. *Id.*, ¶[221]. First, based on a teaching suggestion or motivation in Smith, a POSITA would modify Smith to contain the Reset Enable Function. *Id.*

The design of Smith is non-destructive in that the designed mechanism to shut down the microwave during a smoke sensor event is configured to be reversible by the control of the Smith microcontroller through the use of an electronically controlled relay. *Id.*; ¶[222]. Further, Smith teaches that a goal of the Smith smoke sensor is to anticipate fires before they occur. Ex. 1014 at 1:6-9. Resetting the microwave – undamaged upon early detection of a fire in its early stages – would re-enable the microwave for use again in a subsequent cooking session and would prevent replacing a costly appliance or service call when such replacement or service would not be necessary. Ex. 1002 ¶[223]. Moreover, a POSITA would have understood that modifying Smith to return to a reset state following a shutdown condition and resetting the smoke detection circuitry would yield a reasonable expectation of success and allow for successive detection of smoke events. *Id.* A POSITA would have understood, for example, that a microwave is a commercially sold cooking appliance. *Id.* It would be problematic to offer for sale a microwave oven that had to be serviced or replaced after just one trip of its smoke detection circuit. *Id.* Lastly, it would have been "obvious to try" to add a Reset Enable Function

as discussed previously, because all of the microwave components disclosed in Smith are non-destructive, as discussed above, and designed to be power cycled. *Id.* Thus, there would only be a finite number of potential solutions and conditions for restarting the microwave after the shutdown. A POSITA would have included such a feature with a reasonable expectation of success. *Id.*

d. ***Grounds 7: Obvious in View of Ueda combined with Smith***

As shown above, Ueda and Smith each anticipate or as combined with other references render obvious the Independent Claims. Ex. 1002 ¶[224]. Should the Board decide either Ueda or Smith do not anticipate or render obvious the Independent Claims, under Ground 7, the Independent Claims are obvious in view of Ueda combined with Smith, or Smith combined with Ueda. *Id.*

As discussed above, the only element that is arguably not expressly described in Ueda is that the Ueda SnO_2 gas sensor is used for sensing smoke. However, Smith discloses using that same sensor for the detection of smoke and shutting down a microwave based on its detection. *Id.*, ¶[225]. Alternatively, and as discussed above, the only element that is arguably not expressly described in Smith is the Reset Enable Function. However, Ueda discloses enabling the microwave and sensor following an automatic sensor

shutdown. *Id.*

It would have been obvious to use the described Ueda gas sensor for smoke detection based on the motivation described in Smith to prevent fires because both Ueda and Smith each use the same or similar sensors and both are directed toward sensor-based microwave shutdown. *Id.*, ¶[226]. Alternatively, it would also would have been obvious to use the Reset Enable Function described in Ueda in Smith because both Ueda and Smith are directed toward sensor-based microwave shutdown, and it would have been obvious to reinitialize the microwave in Smith following a sensor-induced shutdown as taught by Ueda in order to re-use the Smith microwave like in Ueda. *Id.*

e. ***Grounds 8, 9 and 10: Obvious in View of ISDU, Ueda, or Smith, combined with Butt***

Ground 8 is the combination of ISDU with Butt. Ground 9 is the combination of Ueda with Butt. Ground 10 is the combination of Smith with Butt. Because the rationales supporting a conclusion of obviousness based on these combinations are similar, they are discussed together. If it is determined that either ISDU or Ueda or Smith do not explicitly and/or implicitly show each and every element of the Independent claims including, for example, the Reset Enable Function, it would have been obvious to a POSITA to combine any one of them with Butt. Ex. 1002 ¶¶[227-28].

Butt teaches a user enabled reset which can be initiated following the smoke detector unit detecting smoke and ceasing the supply of power to the appliance. *See id.*; *supra* at §VI.C.1.a.v.(C). The reset function reinitializes the system for further use by checking for a smoke alarm system signal and closing a relay to reconnect the electrical appliance to AC power if no such signal is detected. Ex. 1002 ¶[228.

There are numerous reasons why a POSITA would have combined the reset functionality taught in Butt with ISDU or Ueda or Smith. *Id.*, ¶[229].

First, Butt, ISDU, Ueda, and Smith each relate to sensors for electric cooking appliances. *Id.*

Second, all the claimed elements of the Independent Claims were known in the prior art, and a POSITA would have combined the elements as disclosed by known methods for the purposes of providing Butt's resettable electrical appliance/smoke sensor functionality to either of ISDU, Ueda, or Smith. *Id.* Such a combination would have yielded nothing more than predictable results to one of ordinary skill in the art. *Id.* Any inclusion of Butt's smoke sensor Reset Enable Function into ISDU, Ueda, or Smith would result in such elements merely performing the same function as they do separately, i.e., smoke sensing to withdraw electrical power from an electrical cooking appliance and then enabling resetting of the electrical cooking

appliance. *Id.* A POSITA would have recognized that the results of said combination were predictable because Butt functions to digitally control power control circuitry for an electrical appliance based on a sensor input, which are also applicable to the electronic controllers of ISDU, Ueda, and/or Smith. *Id.*

Third, a POSITA would have been motivated to combine ISDU or Ueda or Smith with Butt based on the teachings of each reference. *Id.*, ¶[230]. Specifically, ISDU, Ueda, and Smith are each directed towards shutting down a microwave in response to a smoke sensor output indicative of an unwanted condition, ISDU and Ueda each teach re-enabling the microwave following an automatic sensor shutdown, and Smith inherently teaches a power control relay designed to be power cycled by the controller. *Id.*; *supra* at §VI.C.1.a.iv.(A), §VI.C.1.a.iv.(B), §VI.C.1.a.iv.(C), §VI.C.1.a.v.(A) §VI.C.1.a.v.(B), §VI.C.1.a.v.(d). Butt similarly discloses shutting down electrical cooking appliances in response to a smoke sensor, and also discloses resetting the electrical power supply to the cooking appliance after a smoke-triggered shutdown condition and, following that reset, checking for further smoke conditions. Ex. 1002 ¶[230]; *supra* at §VI.C.1.a.iv.(D), VI.C.1.a.v.(C). It would have been obvious to a POSITA to modify any of the ISDU, Ueda, or Smith microwaves to include the Reset Enable Function disclosed by Butt

following the elimination of the unwanted condition detected by ISDU, Ueda, or Smith for the motivation provided in Butt, i.e., to reset the respective electrical cooking appliances and re-check for smoke condition for the added benefit of re-using the microwave. Ex. 1002 ¶[230]. A POSITA would have been able to pursue any of these known potential solutions with a reasonable expectation of success grounded in the disclosures of the prior art. *Id.*

Lastly, a POSITA would also have found the asserted combinations of the microwave oven of ISDU or Ueda or Smith with the Reset Enable Function of Butt "obvious to try." *Id.*, ¶[231]. As shown in ISDU, Ueda, Smith and Butt, at the time of the invention, there was a recognized need in the art to integrate a smoke sensor into a microwave oven to prevent fires from occurring while cooking. *Id.*; Ex. 1012 at 1; Ex. 1013 at 1:6-16; Ex. 1014 at 1:6-40; Ex. 1015 at 1:22-44. Additionally, as discussed above in Ground 5, a POSITA, would have been motivated to modify a microwave oven to re-enable and re-use the microwave oven following a smoke sensor activated shutdown as disclosed by the Butt Reset Enable Function to provide a microwave oven that may be reset without costly replacement or service calls. Ex. 1002 ¶[231]. Further, the potential solutions, for continuing to use the microwave oven after the smoke was eliminated is finite and predictable, i.e., resetting the smoke sensor so it can detect smoke again, and a POSITA would

have known to modify any smoke sensor enabled microwave to provide for further microwave operation when there is no longer a triggering smoke condition. *Id.* This modification would have had a reasonable expectation of success grounded in the disclosures of Butt. *Id.*

f. ***Grounds 11, 12, 13, 14, 15, 16: Obvious in View of Emma combined with ISDU, Ueda, or Smith (with the alternative additional combination with Butt)***

Ground 11 is all of the Dependent Claims are obvious over the combination of Emma and ISDU. Ground 12 is all of the Dependent Claims are obvious over the combination of Emma with Ueda. Ground 13 is all of the Dependent Claims are obvious over the combination of Emma with Smith. Ground 14 is all of the Dependent Claims are obvious over the combination of Emma with ISDU and Butt. Ground 15 is all of the Dependent Claims are obvious over the combination of Emma, with Ueda and Butt. Ground 16 is all of the Dependent Claims are obvious over the combination of Emma, with Smith and Butt. Because the rationales supporting a conclusion of obviousness for the Dependent Claims are very similar, they are discussed together. *Id.*, ¶[232].

As discussed above, the elements of the Independent Claims are fully disclosed or rendered obvious by ISDU, Ueda, and Smith either alone or in combination with Butt. *Id.*, ¶[233].

The Dependent Claims add the claim elements Power Supply Outlet, the Refrigerator, and Withdraw and Deliver Electrical Power All of those elements are fully disclosed by Emma. *Id.*, ¶[234].

Emma is the parent application of the ’206 Patent. *Supra* at §IV.A. Emma discloses a microwave oven refrigerator combination with a power control scheme to prevent an electrical overload of the combined device. Ex. 1002 ¶[235]. The dependent claims merely combine the microwave described in the independent claims with a refrigerator. The combination of a microwave with a refrigerator is exactly what Emma discloses. *Id.* Accordingly, the combination of Emma with ISDU, Ueda, and Smith either alone or in combination with Butt teach all of the elements of the Dependent claims. *Id.*

There are numerous reasons why a POSITA would have combined Emma with each of ISDU, Ueda, or Smith, or alternatively, with ISDU, Ueda, or Smith plus Butt. *Id.*, ¶[236]. First, all the claimed elements were known in the prior art and a POSITA would have combined the elements as claimed by known methods, with no change in their respective functions. *Id.* The combination would have yielded nothing more than predictable results to one of ordinary skill in the art. *Id.* While Emma fails to recite shutting down a microwave based on a smoke sensor, Emma does disclose adding

functionality to appliances by cycling power to a refrigerator and auxiliary electrical outlets for the purpose of improving the safety of the Emma appliance (preventing overload conditions). *Id.* Emma's teaching would motivate a POSITA to look to further microwave functionalities, including those in ISDU, Ueda, or Smith. *Id.*

Each prior art reference also addresses safety or other shutdown conditions while using electrical cooking appliances that provide added functionality. *Id.*, ¶[237]. Additionally, ISDU, Ueda, and Smith explicitly relate to added features of microwave ovens. *Supra* at §VI.B.2.a, VI.B.2.b, VI.B.2.c. It would have been obvious to a POSITA to combine the additional microwave oven safety features of any one of ISDU, Ueda, or Smith into the Emma microwave / refrigerator combination appliance to provide the added microwave features discussed in ISDU, Ueda and Smith, namely to enable the Emma microwave to shutdown upon the detection of smoke and reenable the Emma microwave for a further cooking session when the smoke has cleared. Ex. 1002 ¶[237]. Further, it would have also been obvious to a POSITA to modify any one of ISDU, Ueda, or Smith with the features of the microwave/refrigerator combination of Emma for the purpose and convenience of having an "all-in-one appliance" in addition to the safety feature of managing total power draw as taught by Emma. *Id.*

Similarly, if it is determined that the combinations of Emma with ISDU, Ueda, or Smith fail to teach all of the claim limitations of the Dependent Claims, it would have been further obvious to a POSITA to combine the Reset Enable Function of Butt with Emma (and also with ISDU, Ueda or Smith as discussed above). *Id.*, ¶[238]. As explained above, Butt and Emma are both directed generally to electrical cooking appliances, and it would have been obvious to a POSITA to incorporate the added safety features of the Butt's smoke-detector shutdown device into Emma for the purpose of preventing fires as disclosed by Butt. *Id*.

Each component of the combination would perform the same function in the combination as it does separately. *Id.*, ¶[239]. The results of using a smoke-detector electrical shutoff device for a cooking appliance with the Emma microwave/refrigerator would have been predictable to a POSITA, because the safety design considerations for the combination of a microwave oven and refrigerator were well understood and would yield predictable results. *Id.*

The Dependent Claims are also obvious because a POSITA, faced with the problems described in ISDU or Ueda or Smith or Butt, would have had good reason to try various combinations with Emma. *Id.*, ¶[240]. A POSITA would have found these combinations obvious to try, because each of these

cooking-appliance references separately addresses the issue of either appliance safety or the detection of smoke and gases from electric cooking appliances. *Id.* A POSITA would have known to pursue any of these known potential solutions with a reasonable expectation of success grounded on their successful use in the prior art. *Id.*

As explained above, ISDU, Smith, and Butt are generally directed toward electric cooking appliances with attention to the issue of fire safety and/or automatic shutdown in such appliances. *Id.*, ¶[240]; *supra* at §VI.B.2.a, §VI.B.2.c, §VI.B.2.d. As explained above, the title and Abstract of ISDU disclose an "integrated **smoke detector unit**" for "range ovens and **microwaves**, the leading causes of domestic structure fires." Ex. 1012 at 1. Smith similarly addresses "**improvements …** to an arrangement for anticipating the occurrence of combustion in the cooking cavity of a microwave oven." Ex. 1014 at 1:6-9. Further, Butt discloses, "A controller for interrupting a supply of electricity to an appliance upon detecting a trigger, such as smoke." Ex. 1015 at 1:15-18. And, Ueda describes methods to detect gasses and vapors from foodstuff, which, as discussed above, a POSITA would also have known to be components of smoke. Ex. 1013 at 2:29-34; Ex. 1002 ¶[241].

A POSITA would thus have been motivated to combine Emma with

ISDU, Ueda, or Smith, either alone or with Butt, based on the teachings in each of these references to add additional safety features to Emma, and there would have been a reasonable expectation of success in doing so. Ex. 1002 ¶[242].

D. Objective Indicia of Nonobviousness do not weigh in favor of Patentability

Petitioner is currently unaware of any objective indicia that could overcome the strong showing of obviousness set forth above. Should Patent Owner identify any objective indicia, Petitioner requests an opportunity to rebut any such evidence. *Amneal Pharms. v. Supernus Pharms.*, IPR2013-00368, Paper 8, at 12-13 (PTAB Dec. 17, 2013).

VII. CONCLUSION

For the foregoing reasons, Petitioner respectfully requests that trial be instituted and that all Challenged Claims of the ’206 Patent be cancelled.

Dated: June 8, 2023

Respectfully submitted,

/Domingo M. LLagostera/
Domingo M. LLagostera
Reg. No. 70,684
Counsel for Petitioner

CERTIFICATE OF WORD COUNT

I hereby certify that the foregoing Petition complies with the type-volume limitation of 37 C.F.R. §42.24 and contains 13,563 words based on the word count indicated by the word processing system used to prepare this Petition, excluding those portions exempted by §42.24(a)(1). I also certify that the foregoing Petition complies with the general format requirements of 37 C.F.R. §42.6(c) and has been prepared using Microsoft® Word in 14-point, Times New Roman font.

/Domingo M. LLagostera/
Domingo M. LLagostera
Reg. No. 70,684
Counsel for Petitioner

CERTIFICATE OF SERVICE

I hereby certify that on this 8th day of June, 2023, a copy of this Petition for Inter Partes Review, Petition Appendix A, and Petitioner's Exhibits 1001–1019 were served by Federal Express on the following correspondence address of record for patent owner, pursuant to 37 C.F.R. §42.105(a):

WALKER & JOCKE CO., LPA
231 South Broadway Street
Medina, OH 44256

Courtesy copies of these documents were also sent via electronic mail to Patent Owner's litigation counsel listed below:

R. Scott Johnson
Thomas M. Patton
Cara S. Donels
FREDRIKSON & BYRON, P.A.
111 East Grand Avenue, Suite 301
Des Moines, IA 50309-1977
Telephone: (515) 242-8900
Facsimile: (515) 242-8950
rsjohnson@fredlaw.com
tpatton@fredlaw.com
cdonels@fredlaw.com

/Domingo M. LLagostera/
Domingo M. LLagostera
Reg. No. 70,684
Counsel for Petitioner

Petition Appendix A

Listing of Challenged Claims for U.S. Patent No. 9,791,206

Descriptor	Claim 9	Claim 11[1]	Claim 10	Claim 12
	An apparatus comprising:	Apparatus comprising:	The apparatus according to claim 9 and further comprising:	The apparatus according to claim 11 and further comprising:
"**Microwave Oven**"	a microwave oven configured to be connected to a source of electrical power	a microwave oven configured to be connected to a source of electrical power		
"**Control Circuit**"	and having a control circuit, wherein the control circuit is configured to control operation of the microwave oven;	and having a control circuit configured to control operation of the microwave oven,		
"**Smoke Sensor**"	a smoke sensor, wherein the smoke sensor is positioned in the microwave oven, and is in operative connection with the control circuit,	wherein the microwave oven includes an interior area, a smoke sensor, wherein the smoke sensor is positioned in the interior area, wherein the smoke sensor is in operative connection with the control circuit,		

[1] Certain claim elements have been reordered in this chart to align like claim elements with like descriptors.

Descriptor	Claim 9	Claim 11[1]	Claim 10	Claim 12
"**Shutdown Function**"	wherein the smoke sensor is configured to cause cooking power to the microwave oven to be withdrawn prior to a set end time of a current cooking session upon the smoke sensor sensing smoke indicative of a dangerous condition;	wherein the smoke sensor is configured to cause cooking power to be withdrawn from the microwave oven prior to a set end time of a current cooking session responsive at least in part to the smoke sensor sensing at least one change in an amount of smoke sensed by the smoke sensor which at least one change corresponds to a dangerous condition,		

Descriptor	Claim 9	Claim 11[1]	Claim 10	Claim 12
"**Reset Enable Function**"	and wherein the smoke sensor is configured to be reset after ending the current cooking session prior to the set end time based on sensing the smoke indicative of the dangerous condition, to enable the microwave oven to deliver cooking power in a next subsequent cooking session responsive at least in part to the smoke sensor no longer sensing the smoke indicative of the dangerous condition.	and wherein the control circuit is configured to reset after ending the current cooking session prior to the set end time due to sensing the dangerous condition, to enable cooking power to again be available to the microwave oven in a next subsequent cooking session responsive at least in part to the smoke sensor no longer sensing the dangerous condition.		
"**Power Supply Outlet**"			a power supply outlet on the microwave oven, wherein the power supply outlet is in operative connection with the control circuit,	a power supply outlet on the microwave oven,

Descriptor	Claim 9	Claim 11[1]	Claim 10	Claim 12
"**Refrigerator**"			a refrigerator, wherein the refrigerator is electrically connected with the power supply outlet,	a refrigerator configured to be connected to the source of electrical power by connection to the power supply outlet, wherein the refrigerator includes a compressor,
"Withdraw and Deliver Electrical Power"			wherein the control circuit is operative to withdraw electrical power from the refrigerator when the microwave oven draws cooking power, deliver electrical power to the refrigerator when the microwave oven does not draw cooking power.	wherein the control circuit is operative to cause electrical power to be unavailable to the compressor, when the microwave oven demands cooking power, electrical power to be available to the compressor when the microwave oven does not demand cooking power.