US010495374B1

(12) **United States Patent**
Hall et al.

(10) **Patent No.: US 10,495,374 B1**
(45) **Date of Patent: Dec. 3, 2019**

(54) **MULTIPLE LINKED APPLIANCE WITH AUXILIARY OUTLET**

(71) Applicant: **Intirion Corporation**, Walpole, MA (US)

(72) Inventors: **Gregory Allan Thomas Hall**, Guelph (CA); **Philip Emma**, Topsfield, MA (US)

(73) Assignee: **Intirion Corporation**, Walpole, MA (US)

(*) Notice: Subject to any disclaimer, the term of this patent is extended or adjusted under 35 U.S.C. 154(b) by 335 days.

(21) Appl. No.: **15/600,118**

(22) Filed: **May 19, 2017**

Related U.S. Application Data

(63) Continuation of application No. 15/135,883, filed on Apr. 22, 2016, now Pat. No. 9,664,436, which is a continuation-in-part of application No. 14/262,290, filed on Apr. 25, 2014, now Pat. No. 9,657,974, which is a continuation-in-part of application No. 12/317,632, filed on Dec. 23, 2008, now Pat. No. 8,742,304.

(60) Provisional application No. 61/009,419, filed on Dec. 28, 2007.

(51) **Int. Cl.**

H05B 6/64	(2006.01)
H05B 6/66	(2006.01)
H05B 6/68	(2006.01)
F25D 23/12	(2006.01)

(52) **U.S. Cl.**
CPC ***F25D 23/12*** (2013.01); ***H05B 6/666*** (2013.01); ***H05B 6/68*** (2013.01)

(58) **Field of Classification Search**
CPC H05B 6/645; H05B 6/666; H05B 6/68; H05B 6/806; F25D 23/12; F25B 29/005
USPC 219/482, 483, 485, 488, 678, 679, 695, 219/697, 702, 715, 716, 717, 718, 719, 219/720, 721, 722, 723, 756, 757, 760, 219/761
See application file for complete search history.

(56) **References Cited**

U.S. PATENT DOCUMENTS

4,763,015 A * 8/1988 St. Louis H02J 3/14 307/126
4,847,722 A * 7/1989 Bennett F25D 23/12 219/679

(Continued)

FOREIGN PATENT DOCUMENTS

JP 5-240447 A * 9/1993
JP 2001-33043 A * 2/2001

Primary Examiner — Hung D Nguyen
(74) *Attorney, Agent, or Firm* — Ralph E. Jocke; Walker & Jocke

(57) **ABSTRACT**

A combination microwave and refrigerator system is provided. The microwave oven is connected to a source of power and has a control circuit for controlling the operation of the microwave oven. A first power supply outlet is provided on the microwave oven. A refrigerator is connected to the source of power by connection to the first power supply outlet. The control circuit is configured to disable the cooking operation of the refrigerator, when the microwave oven demands cooking power, and enable the cooling operation of the refrigerator when the microwave oven is not drawing cooking power. A safety sensor is provided in the microwave oven, and is configured to cause cooking power to the microwave oven to be turned off upon the safety sensor sensing a dangerous condition.

20 Claims, 25 Drawing Sheets

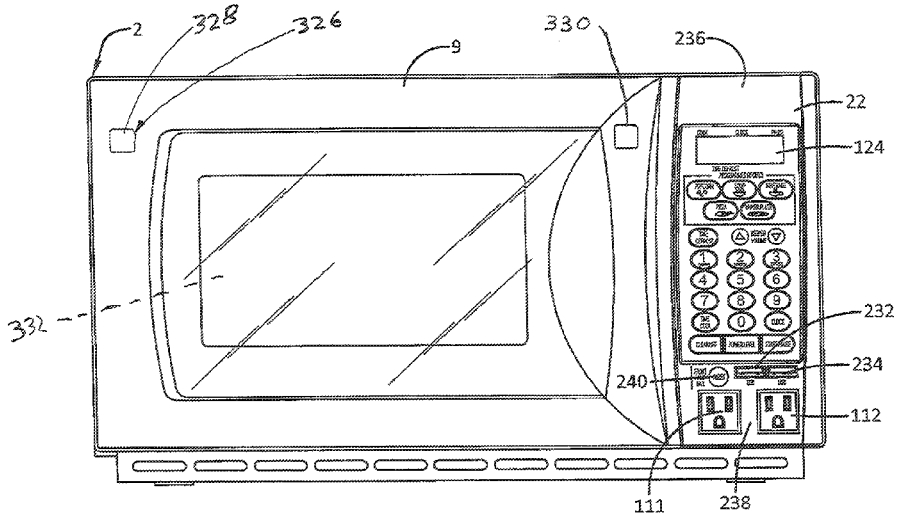

(56) **References Cited**

U.S. PATENT DOCUMENTS

4,880,954	A *	11/1989	Bennett	F25D 23/12	219/679
5,521,359	A *	5/1996	Bone	H05B 6/68	219/485
2003/0106892	A1*	6/2003	Shon	H05B 6/642	219/757
2008/0000650	A1*	1/2008	Choi	A62C 3/006	219/679

* cited by examiner

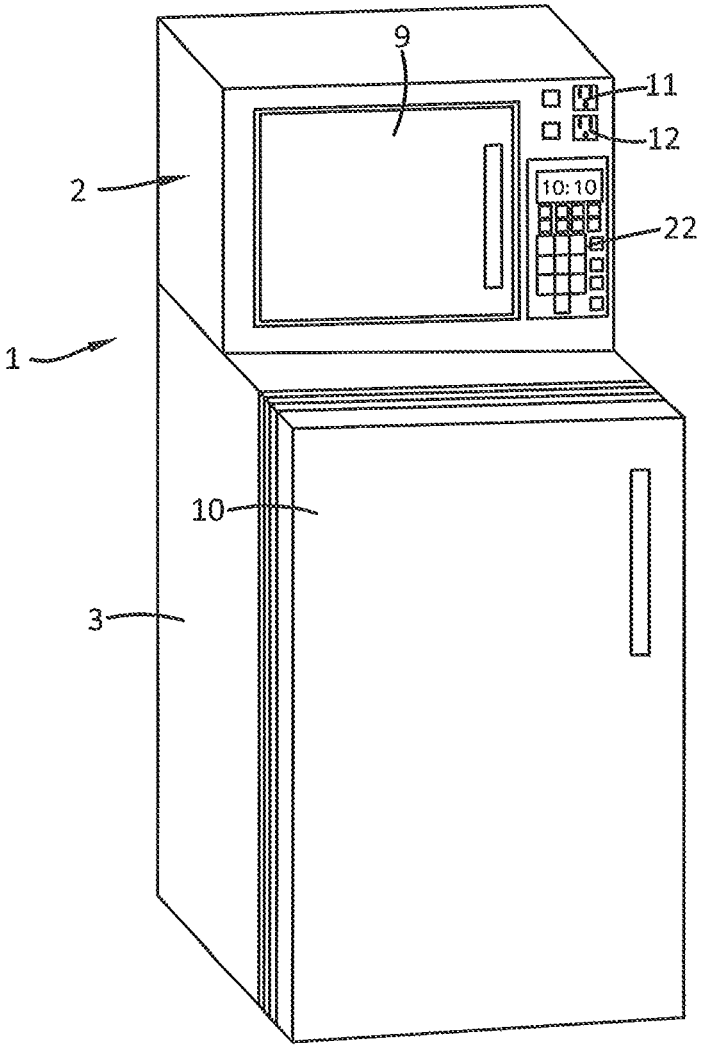

FIGURE 1

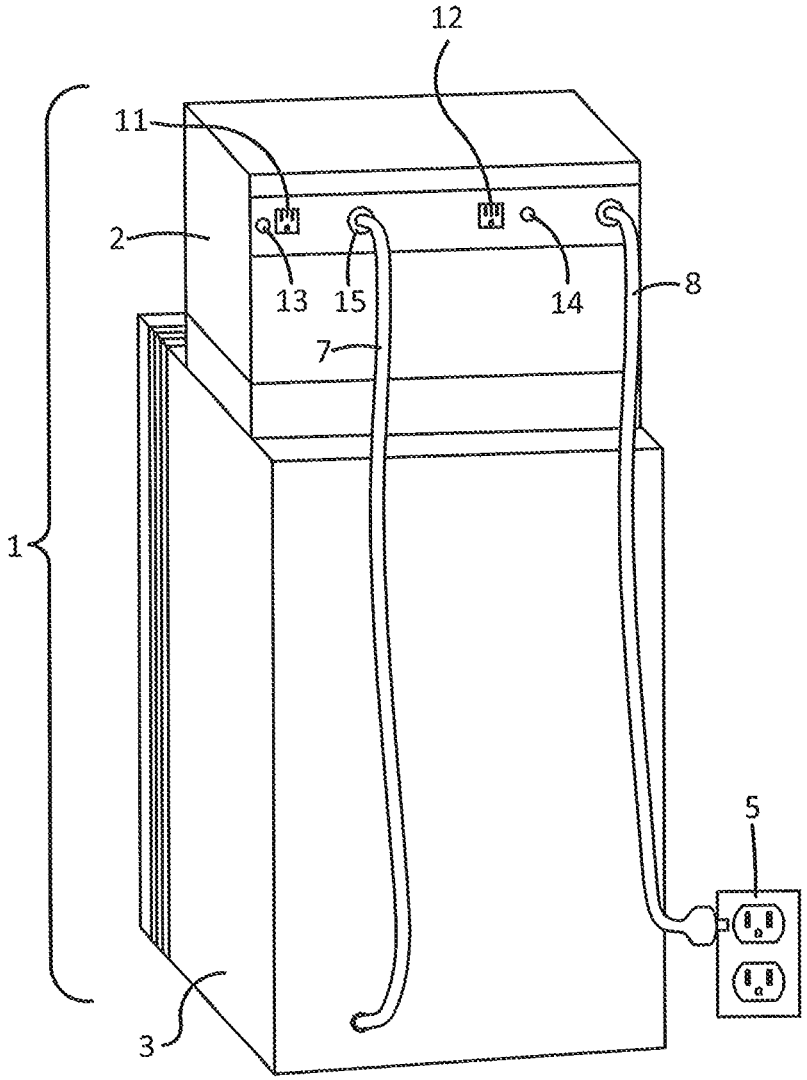

FIGURE 2

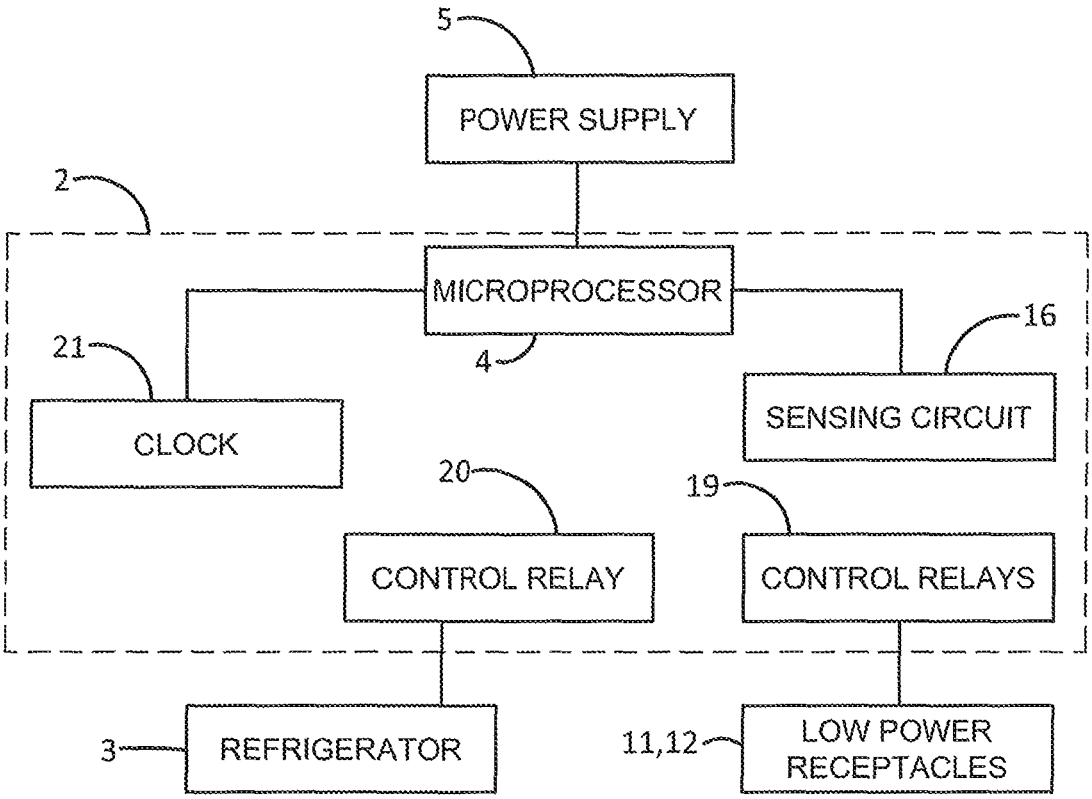
5
POWER SUPPLY
2
MICROPROCESSOR
4
16
21
SENSING CIRCUIT
CLOCK
20
19
CONTROL RELAY
CONTROL RELAYS
3
REFRIGERATOR
11,12
LOW POWER RECEPTACLES

FIGURE 3

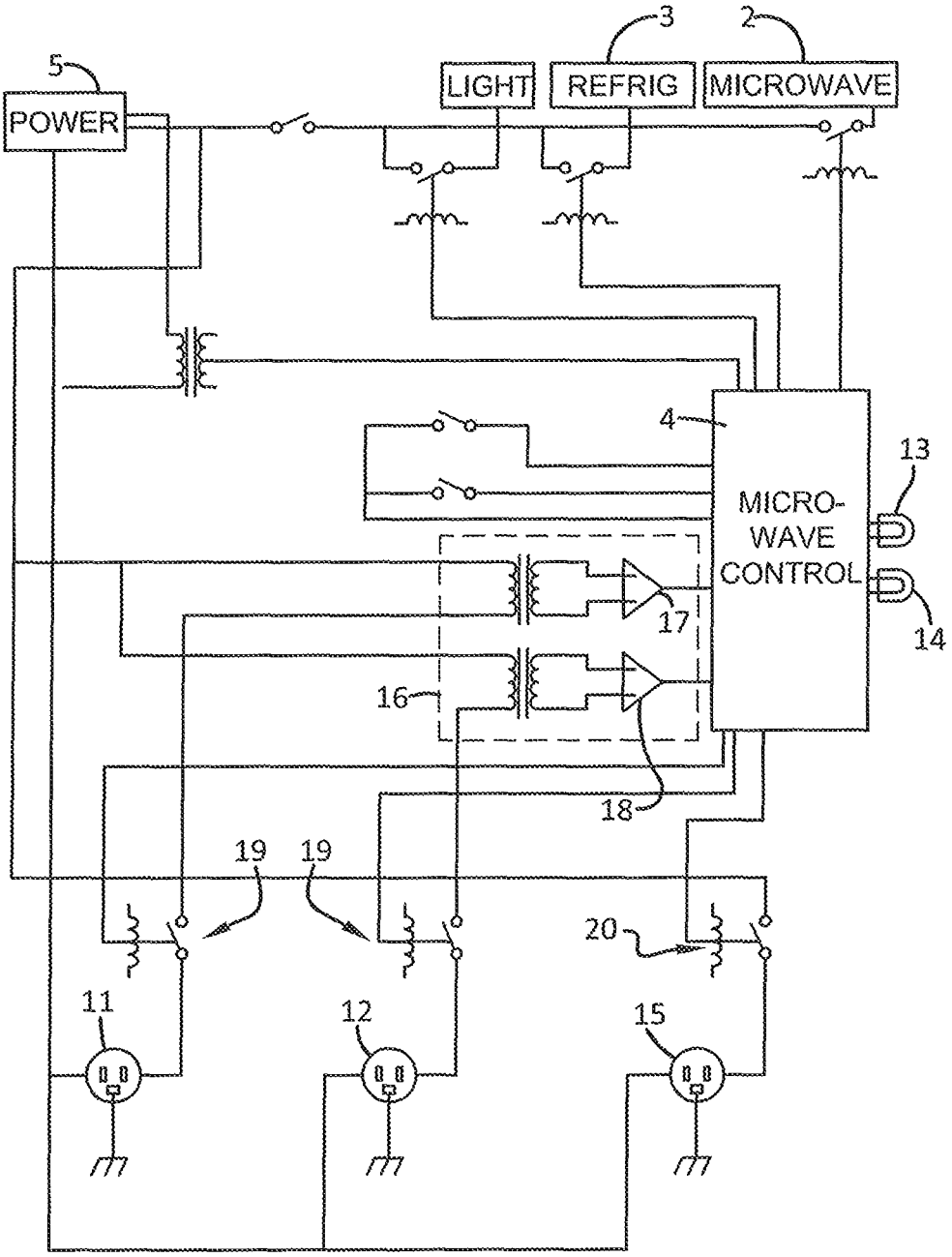
5
POWER
LIGHT
REFRIG
MICROWAVE
3
2
4
MICRO-
WAVE
CONTROL
13
14
17
16
18
19
19
20
11
12
15

FIGURE 4

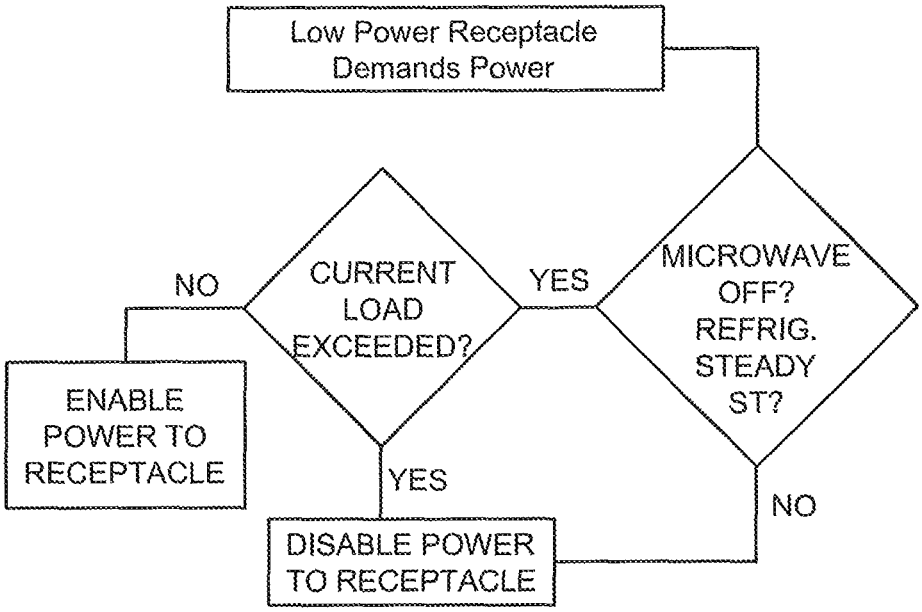

FIGURE 5

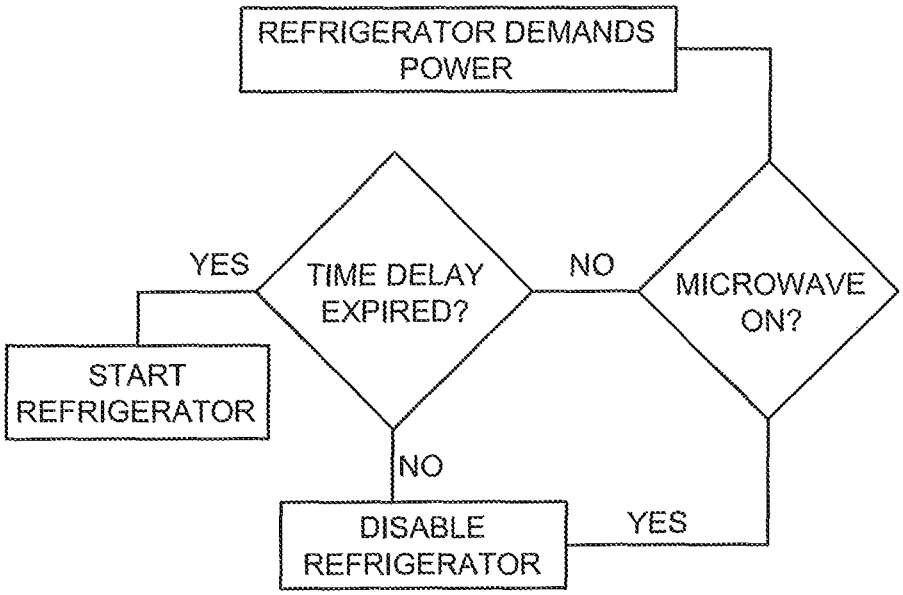

FIGURE 6

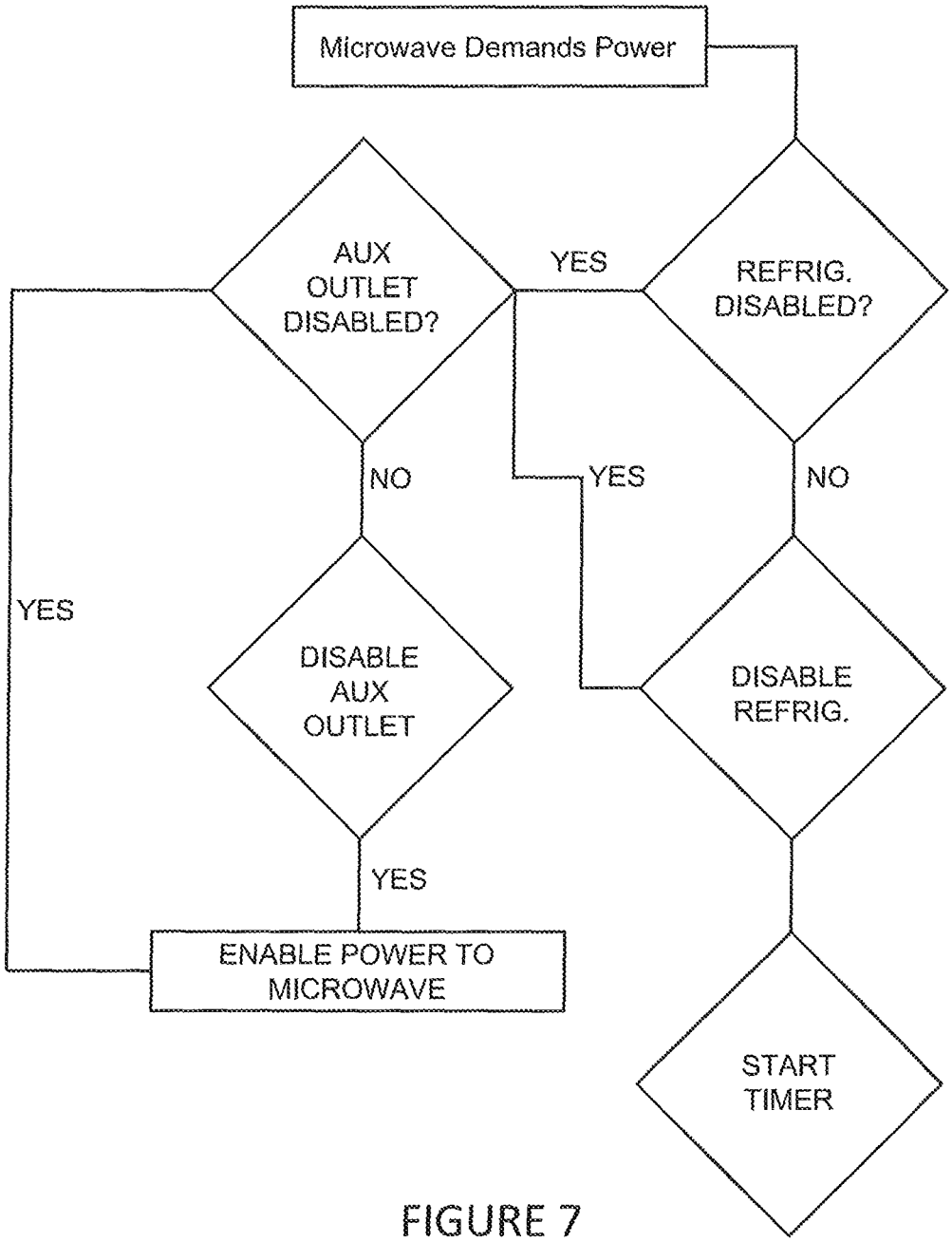
Microwave Demands Power
AUX OUTLET DISABLED?
YES
REFRIG. DISABLED?
NO
YES
NO
YES
DISABLE AUX OUTLET
DISABLE REFRIG.
YES
ENABLE POWER TO MICROWAVE
START TIMER

FIGURE 7

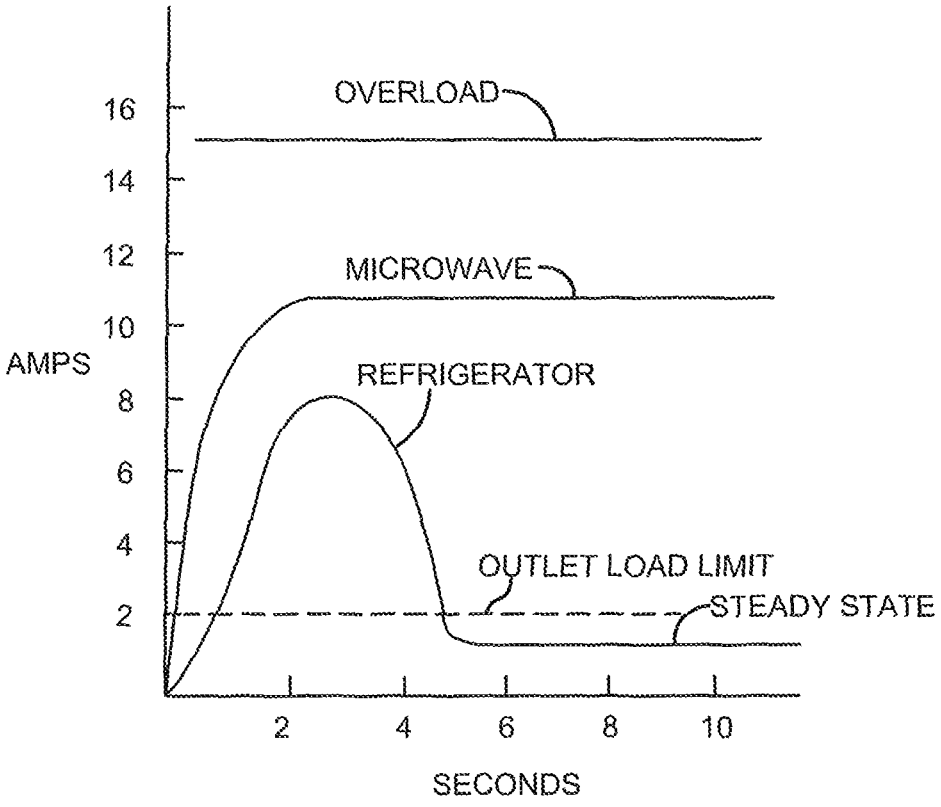
OVERLOAD
MICROWAVE
REFRIGERATOR
OUTLET LOAD LIMIT
STEADY STATE
AMPS
16
14
12
10
8
6
4
2
2
4
6
8
10
SECONDS

FIGURE 8

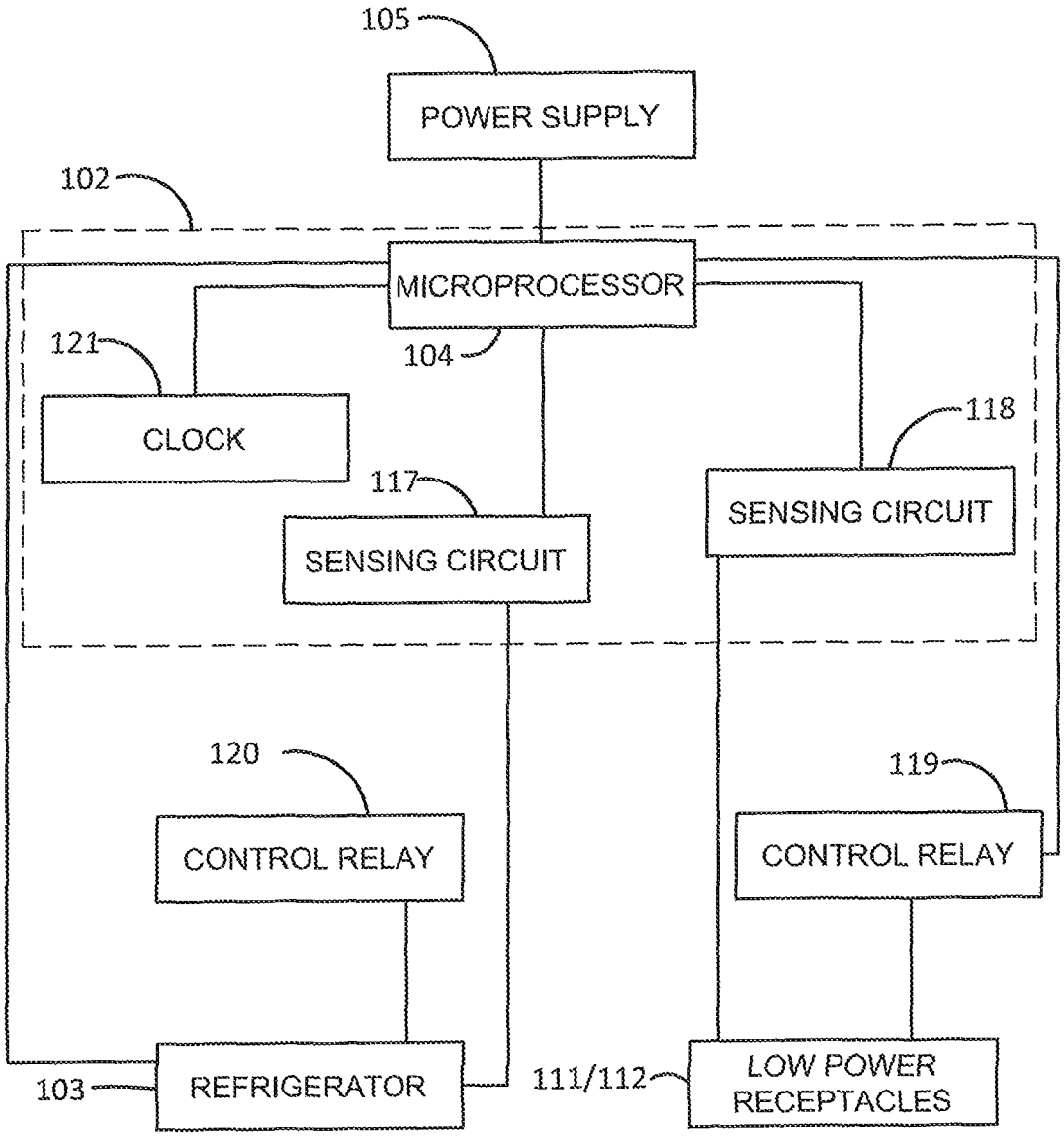
105
POWER SUPPLY
102
MICROPROCESSOR
104
121
CLOCK
118
SENSING CIRCUIT
117
SENSING CIRCUIT
120
CONTROL RELAY
119
CONTROL RELAY
103
REFRIGERATOR
111/112
LOW POWER RECEPTACLES

FIGURE 9

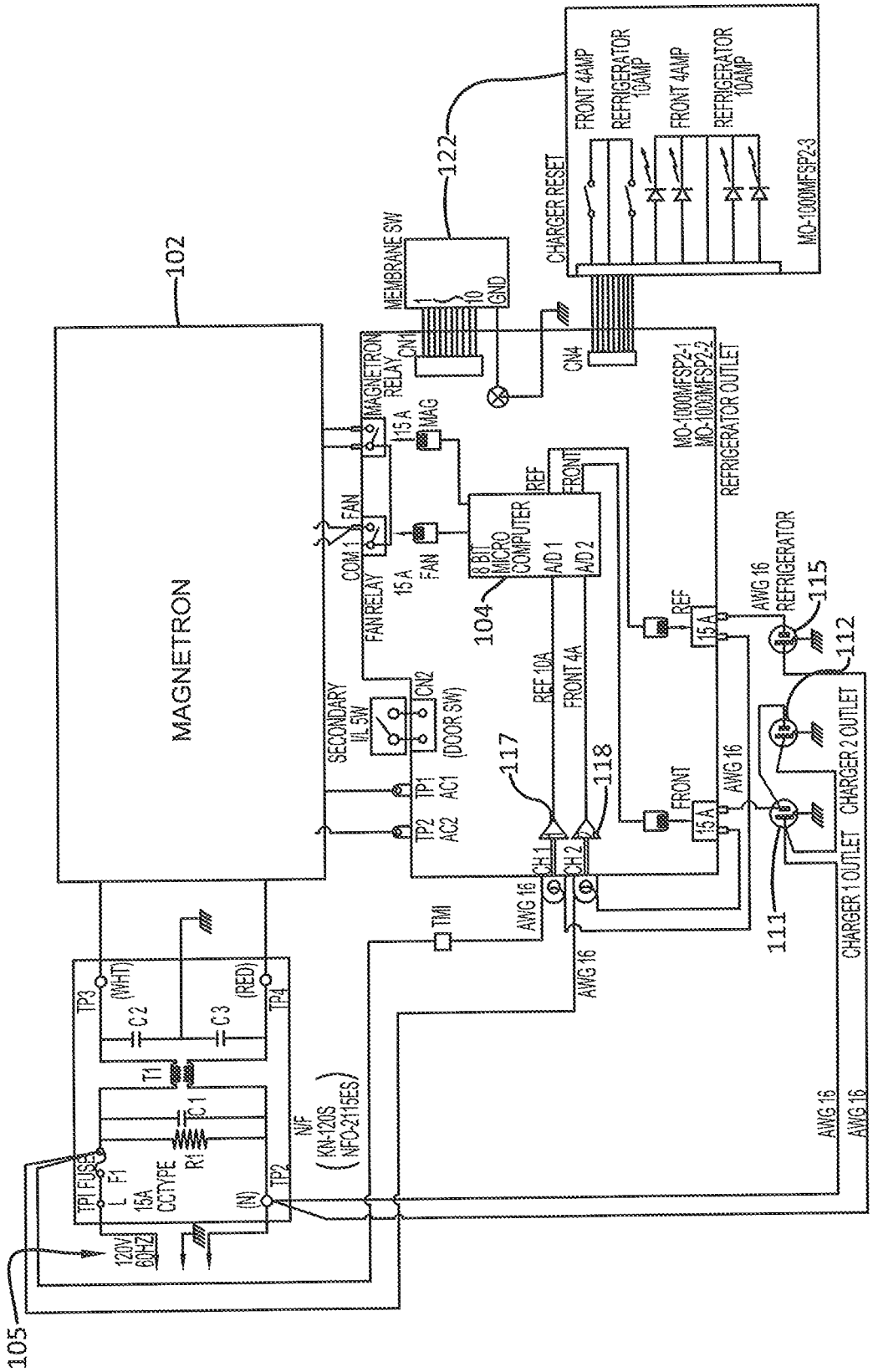
MAGNETRON
102
105
122
MEMBRANE SW
CN1
CN4
CHARGER RESET
FRONT 4AMP
REFRIGERATOR 10AMP
MO-1000MFSP2-3
MAGNETRON RELAY
15 A
MAG
FAN
COM 1
FAN RELAY
8 BIT MICRO COMPUTER
A/D 1
A/D 2
REF
FRONT
104
MO-1000MFSP2-1
MO-1000MFSP2-2
REFRIGERATOR OUTLET
AWG 16
REFRIGERATOR
115
112
SECONDARY I/L SW
CN2
(DOOR SW)
TP1
AC1
TP2
AC2
REF 10A
FRONT 4A
117
118
CH 1
CH 2
CHARGER 2 OUTLET
CHARGER 1 OUTLET
111
TMI
TP3
(WHT)
C2
C3
(RED)
TP4
T1
C1
R1
TP1 FUSE
F1
L
15A
CCTYPE
(N)
TP2
N/F
(KN-120S
NFO-2115ES)
120V
60HZ

FIGURE 10

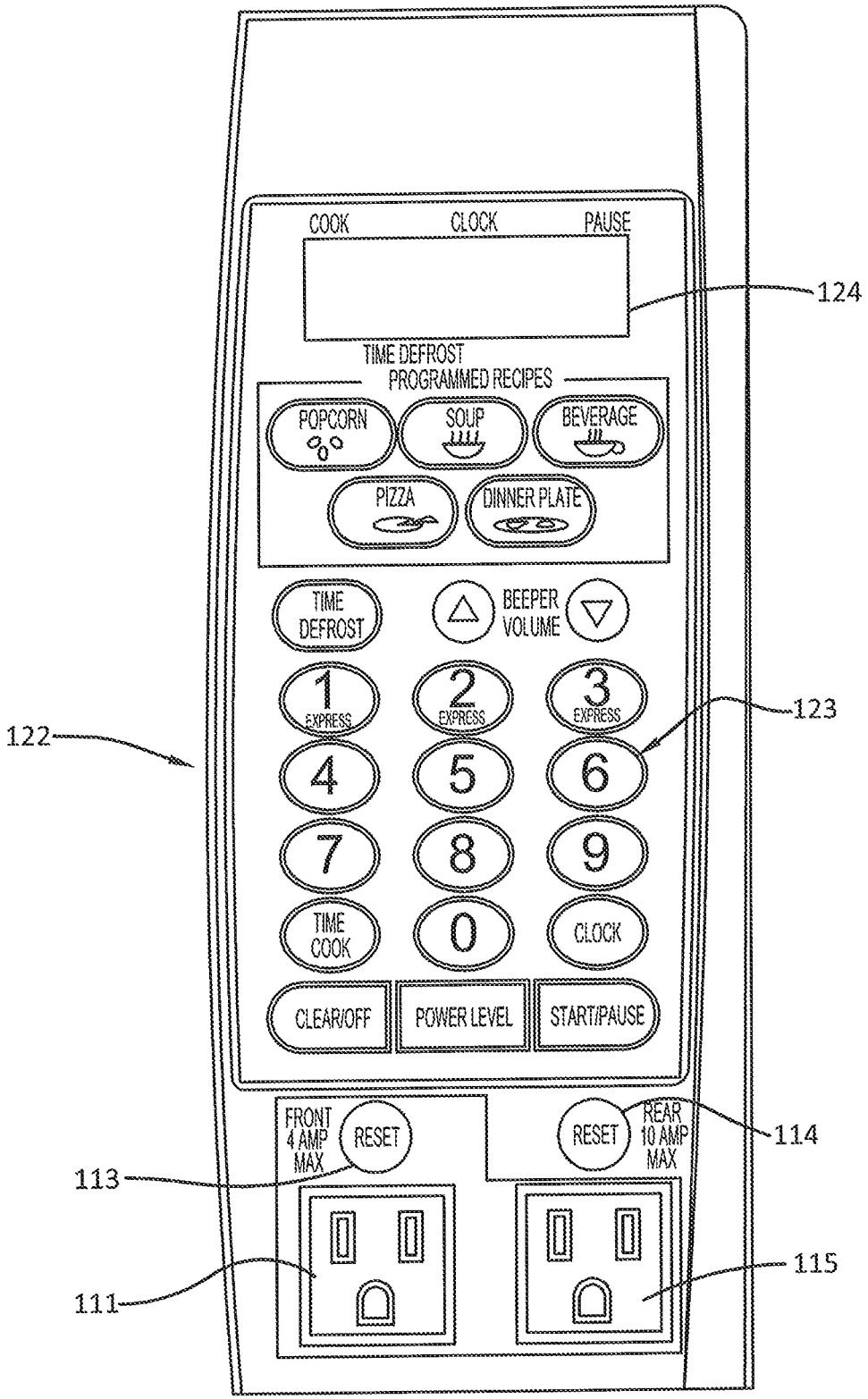
COOK
CLOCK
PAUSE
124
TIME DEFROST
PROGRAMMED RECIPES
POPCORN
SOUP
BEVERAGE
PIZZA
DINNER PLATE
TIME DEFROST
BEEPER VOLUME
1 EXPRESS
2 EXPRESS
3 EXPRESS
123
122
4
5
6
7
8
9
TIME COOK
0
CLOCK
CLEAR/OFF
POWER LEVEL
START/PAUSE
FRONT 4 AMP MAX
RESET
RESET
REAR 10 AMP MAX
114
113
111
115

FIGURE 11

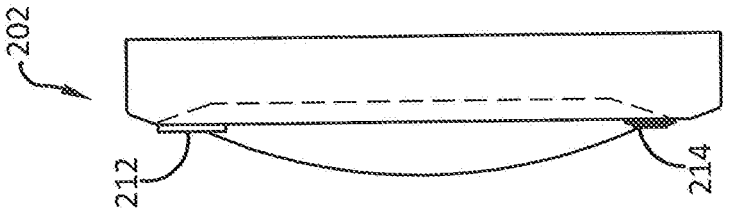

FIGURE 13

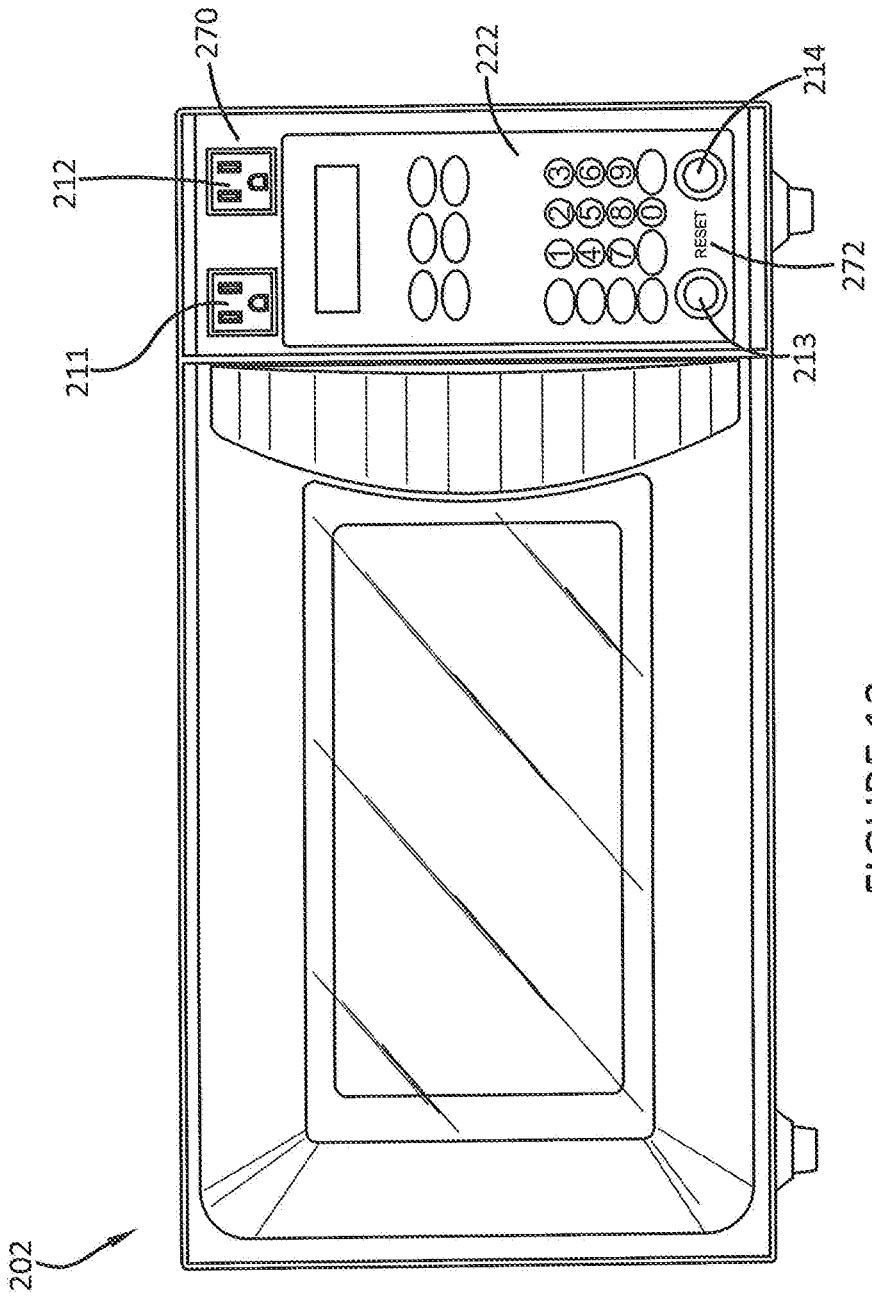

FIGURE 12

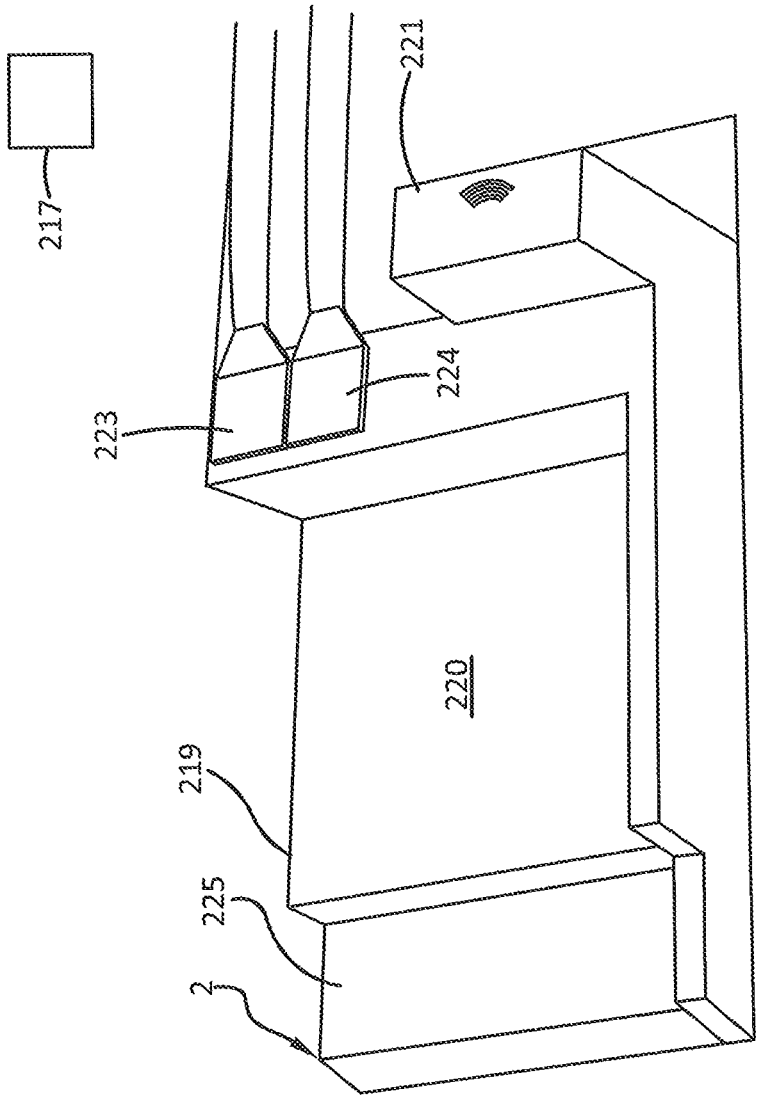

FIGURE 14

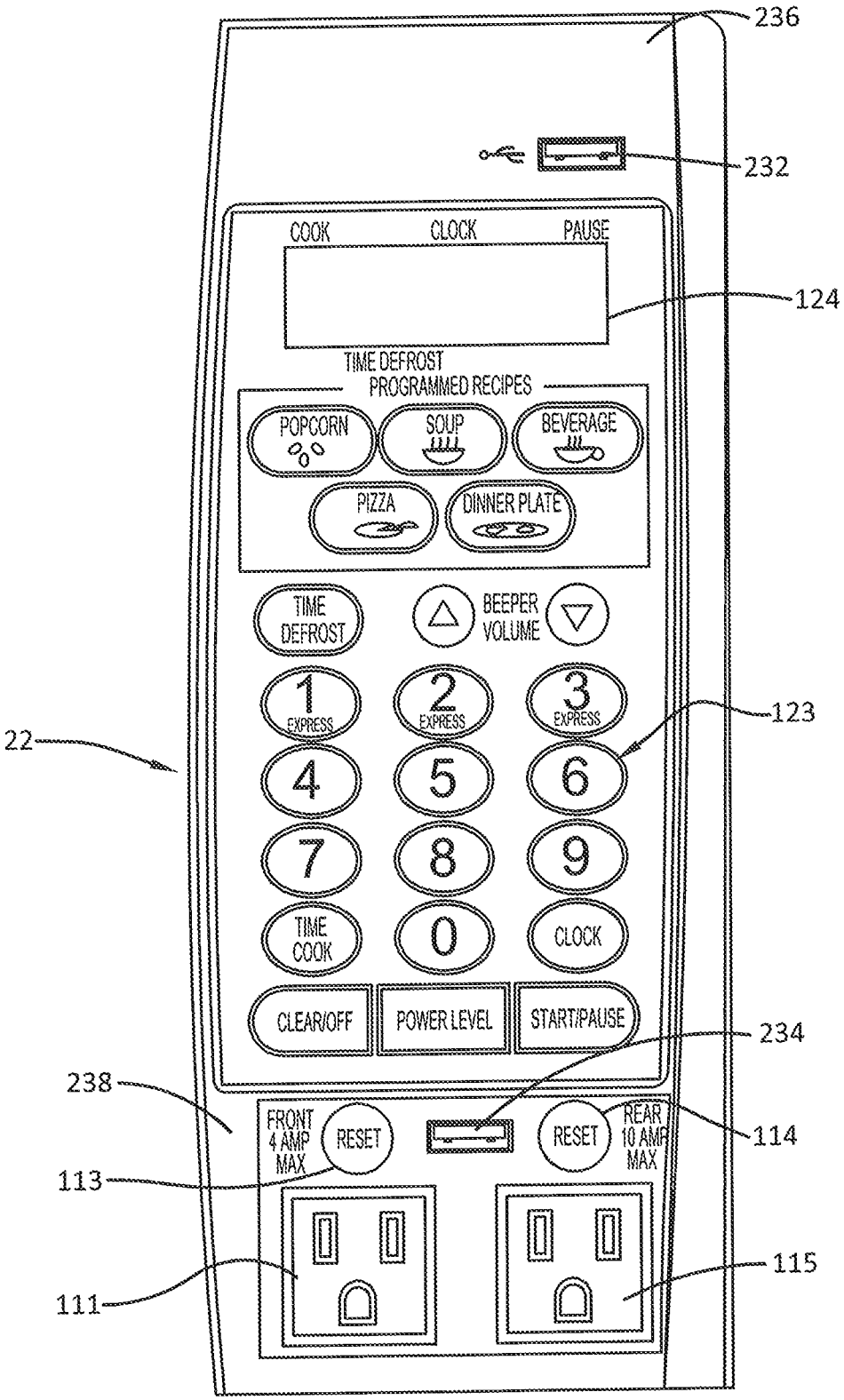
236
232
COOK
CLOCK
PAUSE
124
TIME DEFROST
PROGRAMMED RECIPES
POPCORN
SOUP
BEVERAGE
PIZZA
DINNER PLATE
TIME DEFROST
BEEPER VOLUME
1 EXPRESS
2 EXPRESS
3 EXPRESS
123
22
4
5
6
7
8
9
TIME COOK
0
CLOCK
CLEAR/OFF
POWER LEVEL
START/PAUSE
234
238
FRONT 4 AMP MAX
RESET
RESET
REAR 10 AMP MAX
114
113
115
111

FIGURE 15

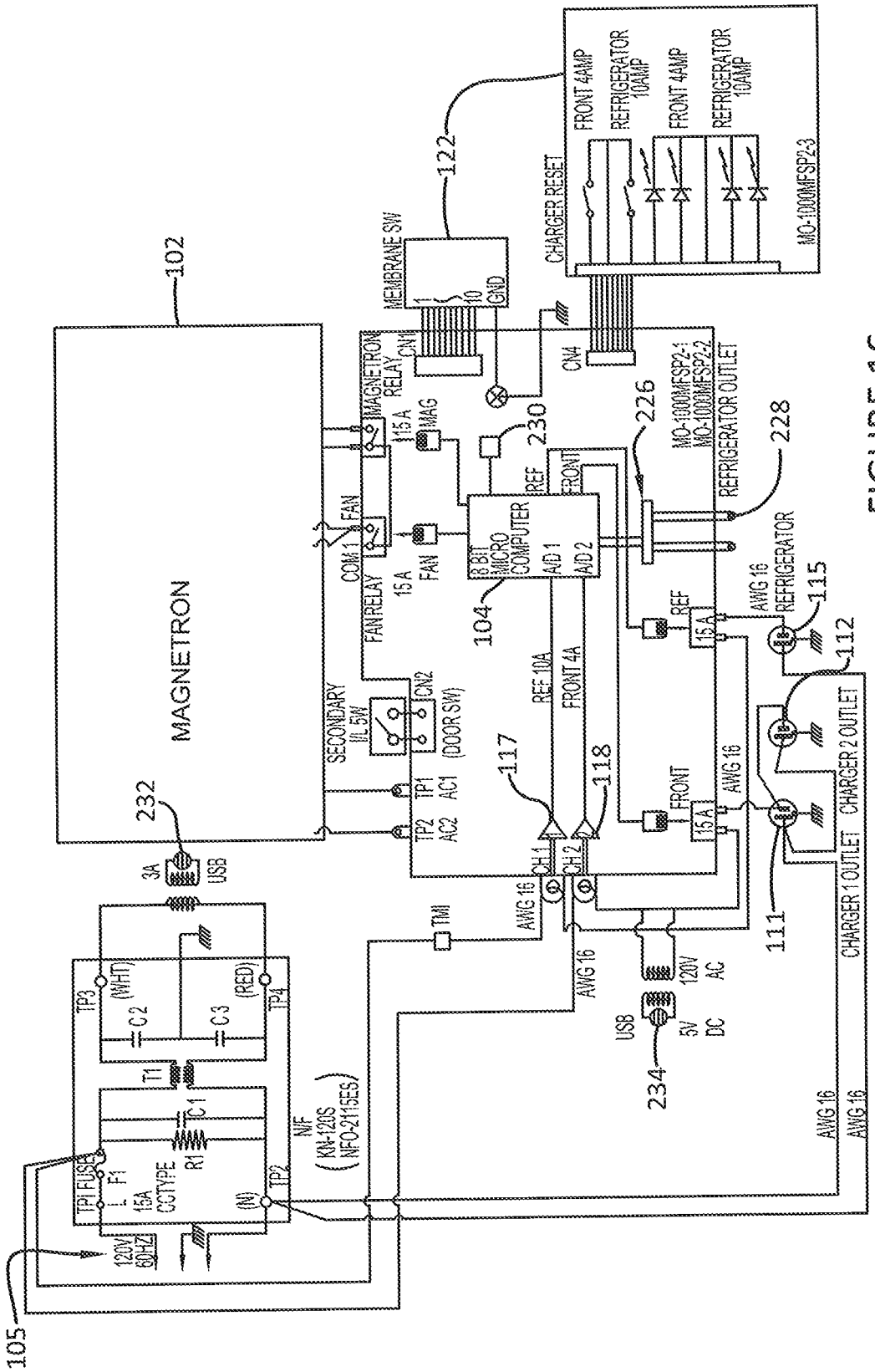
MAGNETRON
102
105
122
104
117
118
111
112
115
226
228
230
232
234
MEMBRANE SW
CHARGER RESET
FRONT 4AMP
REFRIGERATOR 10AMP
MO-1000MFSP2-3
MAGNETRON RELAY
FAN RELAY
COM 1
FAN
MAG
8 BIT MICRO COMPUTER
A/D 1
A/D 2
REF
FRONT
REF 10A
FRONT 4A
SECONDARY I/L SW
CN1
CN2
CN4
(DOOR SW)
TP1 AC1
TP2 AC2
CH 1
CH 2
AWG 16
REFRIGERATOR
REFRIGERATOR OUTLET
MO-1000MFSP2-1
MO-1000MFSP2-2
CHARGER 1 OUTLET
CHARGER 2 OUTLET
120V AC
5V DC
USB
3A
TMI
TP1 FUSE
F1
15A CCTYPE
R1
C1
T1
C2
C3
TP3 (WHT)
TP4 (RED)
N/F (KN-120S NFO-2115ES)
120V 60HZ

FIGURE 16

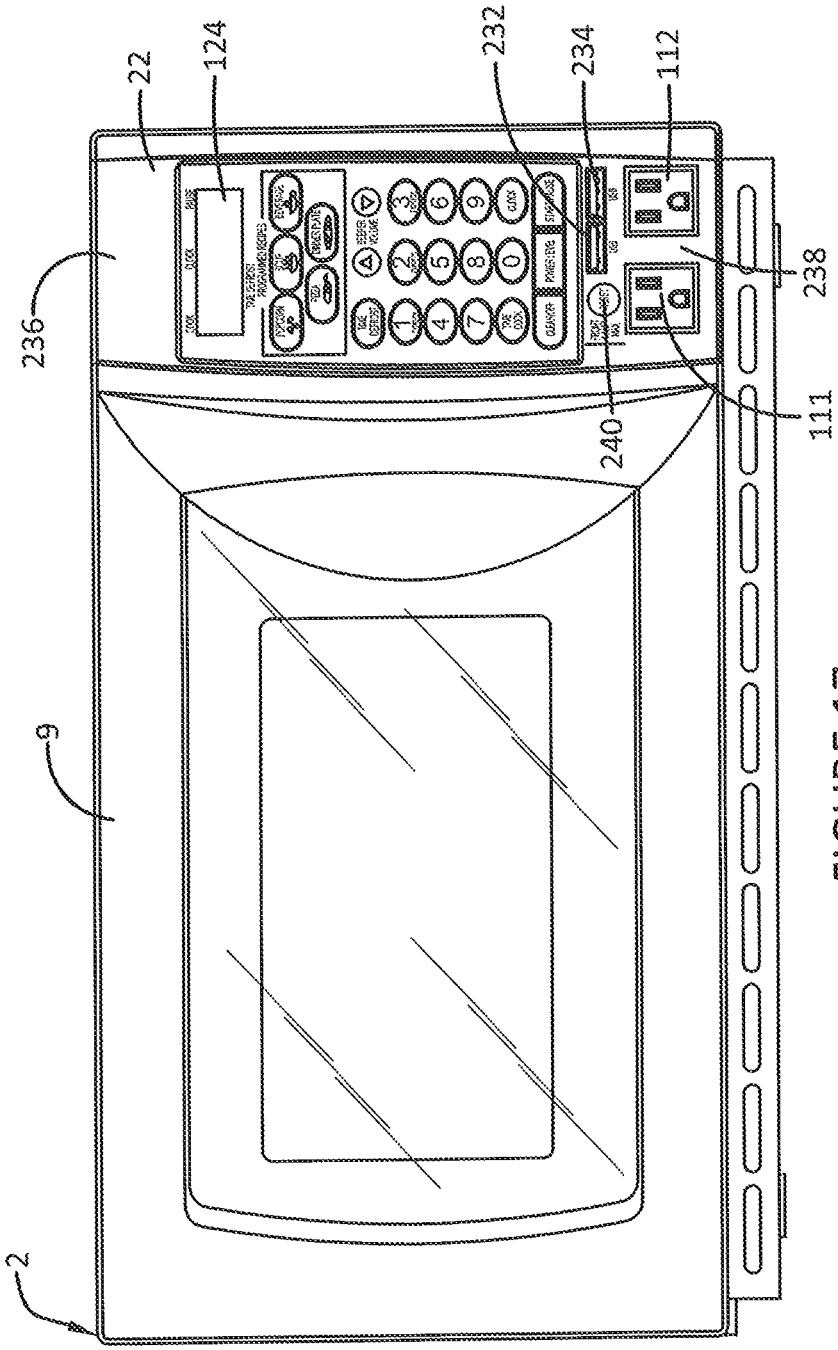

FIGURE 17

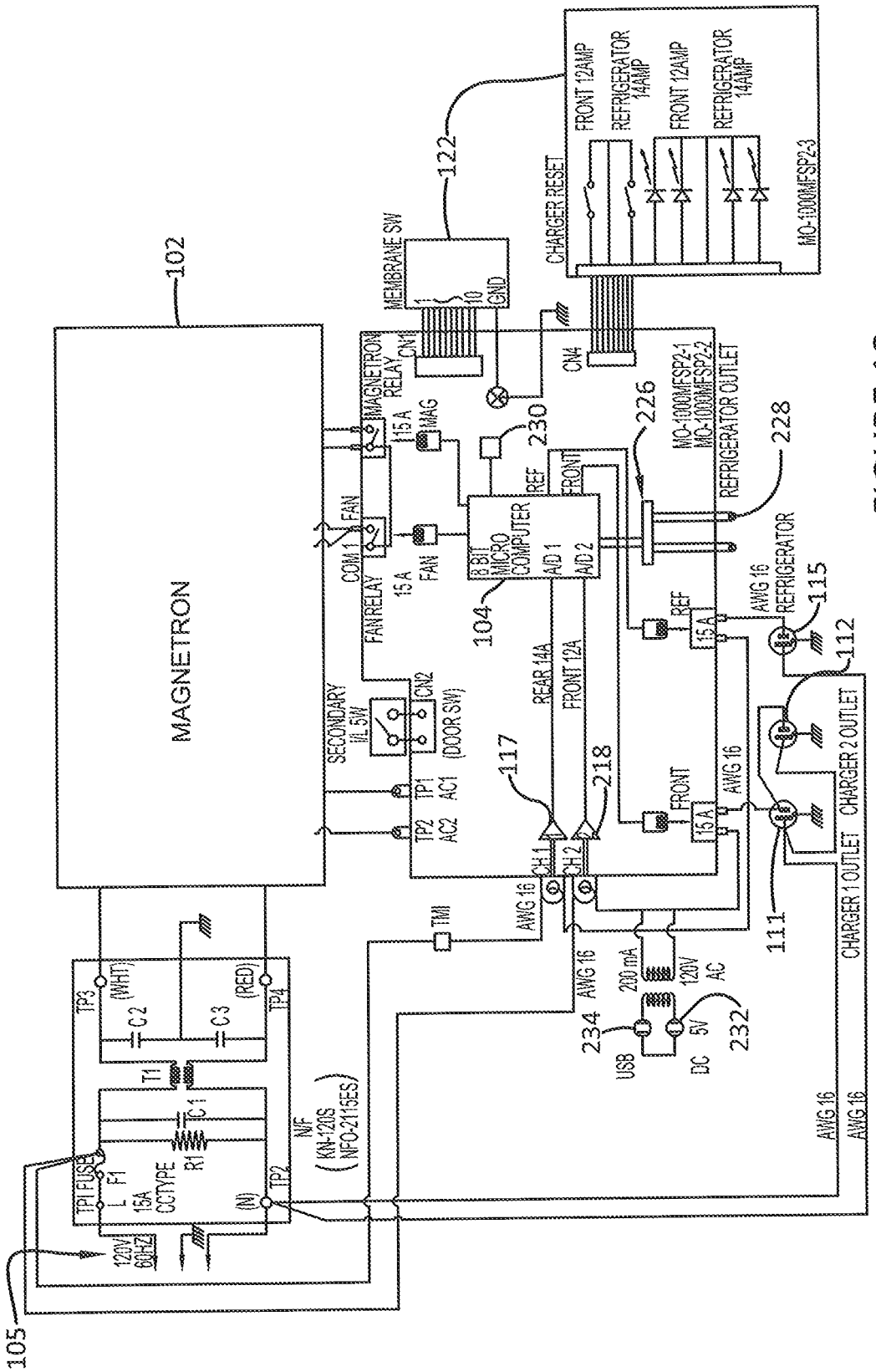
102
MAGNETRON
122
MEMBRANE SW
1
10
GND
CN1
CN4
CHARGER RESET
FRONT 12AMP
REFRIGERATOR 14AMP
FRONT 12AMP
REFRIGERATOR 14AMP
MO-1000MFSP2-3
MAGNETRON RELAY
15 A
MAG
230
226
228
MO-1000MFSP2-1
MO-1000MFSP2-2
REFRIGERATOR OUTLET
REF
FRONT
FAN
COM 1
FAN RELAY
15 A
FAN
8 BIT MICRO COMPUTER
A/D 1
A/D 2
104
REF
15 A
AWG 16
REFRIGERATOR
115
112
SECONDARY I/L SW
CN2
(DOOR SW)
REAR 14A
FRONT 12A
117
218
TP1
AC1
TP2
AC2
FRONT
15 A
AWG 16
CH 1
CH 2
CHARGER 2 OUTLET
111
CHARGER 1 OUTLET
TMI
AWG 16
AWG 16
200 mA
120V AC
234
USB
DC
5V
232
TP3
(WHT)
C 2
C 3
(RED)
TP4
T1
C 1
R1
TP1 FUSE
L
F1
15A
CCTYPE
(N)
TP2
N/F
(KN-120S
NFO-2115ES)
120V
60HZ
105
AWG 16
AWG 16

FIGURE 18

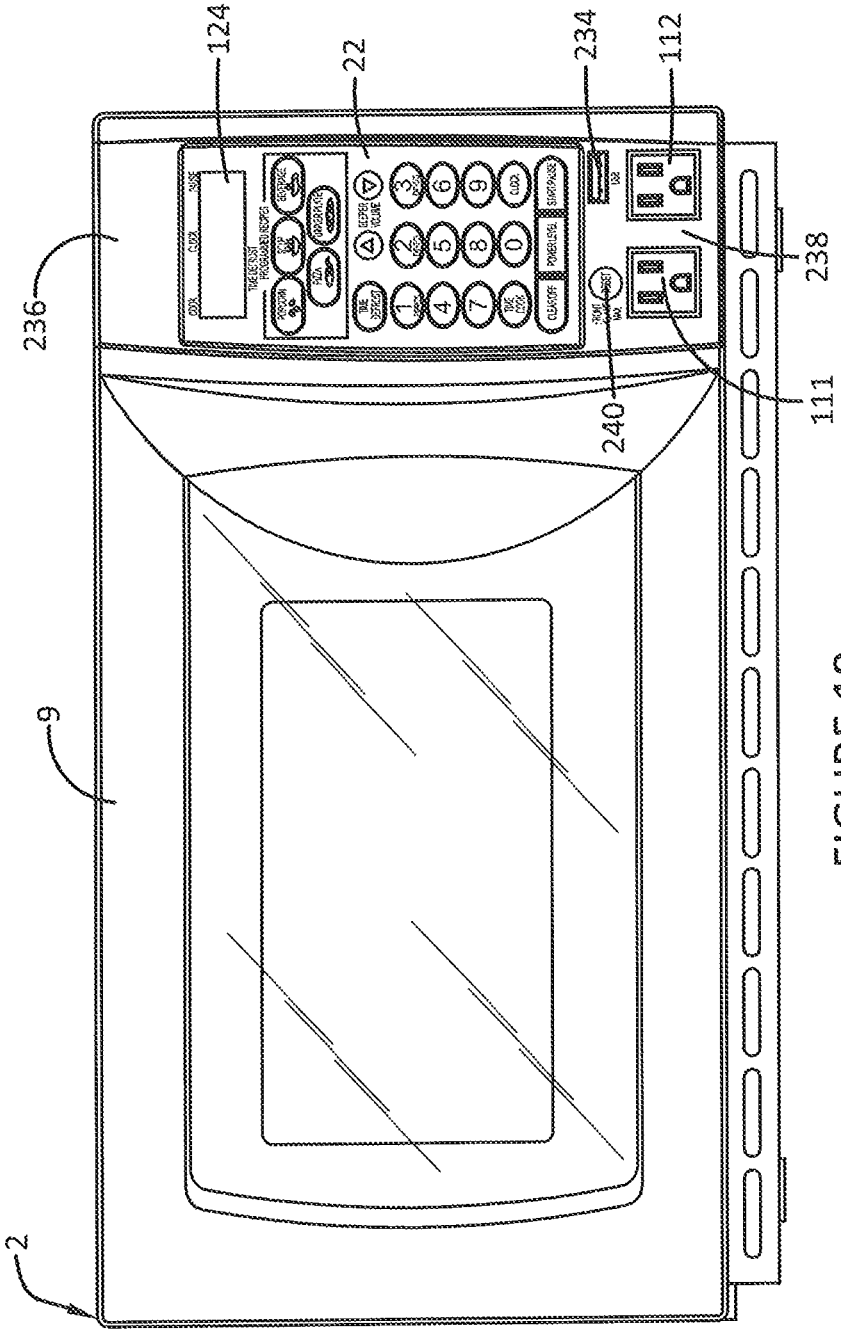

FIGURE 19

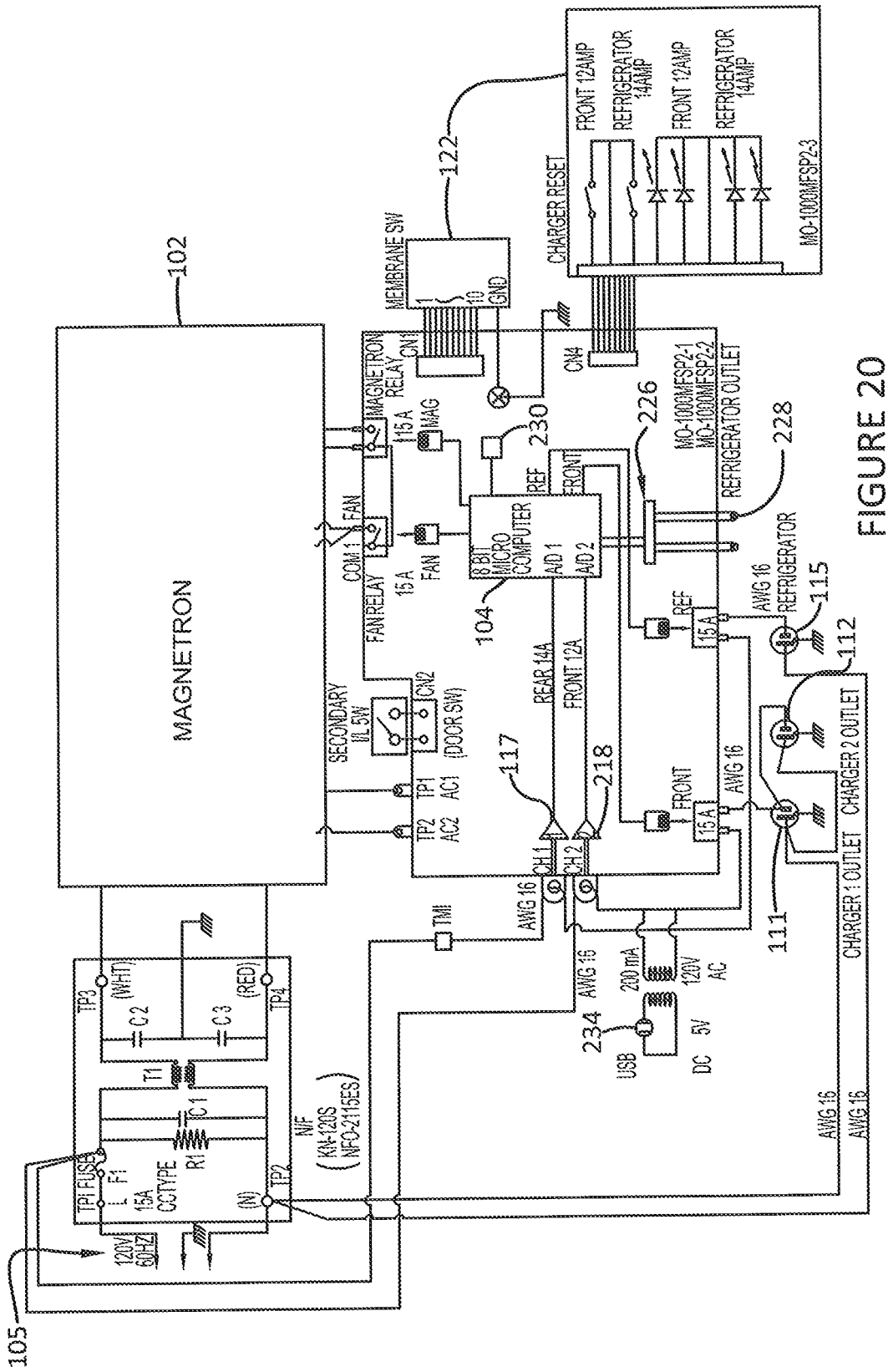
MAGNETRON
102
105
122
MEMBRANE SW
CN1
GND
CHARGER RESET
FRONT 12AMP
REFRIGERATOR 14AMP
MO-1000MFSP2-3
CN4
MAGNETRON RELAY
15 A
MAG
230
226
228
MO-1000MFSP2-1
MO-1000MFSP2-2
REFRIGERATOR OUTLET
FAN
COM 1
FAN RELAY
8 BIT MICRO COMPUTER
A/D 1
A/D 2
REF
FRONT
104
REAR 14A
FRONT 12A
SECONDARY I/L SW
CN2
(DOOR SW)
TP1
AC1
TP2
AC2
117
218
CH 1
CH 2
AWG 16
REFRIGERATOR
115
112
111
CHARGER 2 OUTLET
CHARGER 1 OUTLET
TMI
200 mA
120V AC
234
USB
DC 5V
TP3
(WHT)
C 2
C 3
(RED)
TP4
T1
C 1
R1
TP1 FUSE
F1
15A CCTYPE
(N)
TP2
N/F
(KN-120S NFO-2115ES)
120V 60HZ

FIGURE 20

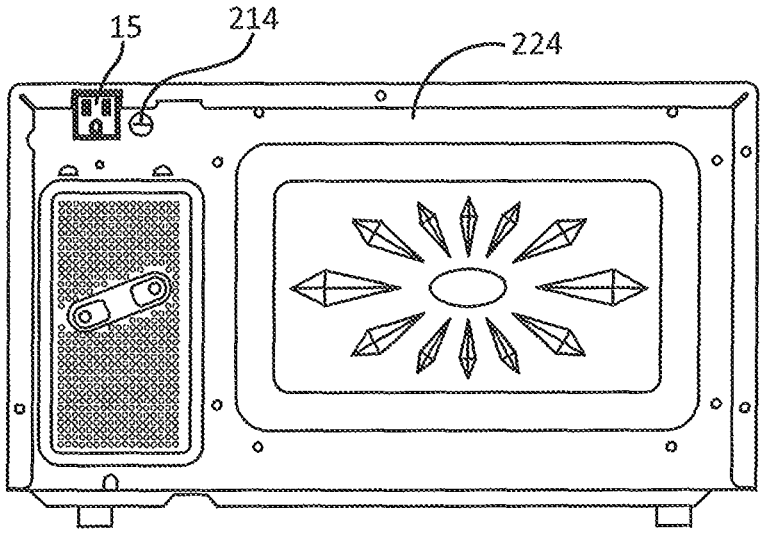

FIGURE 21

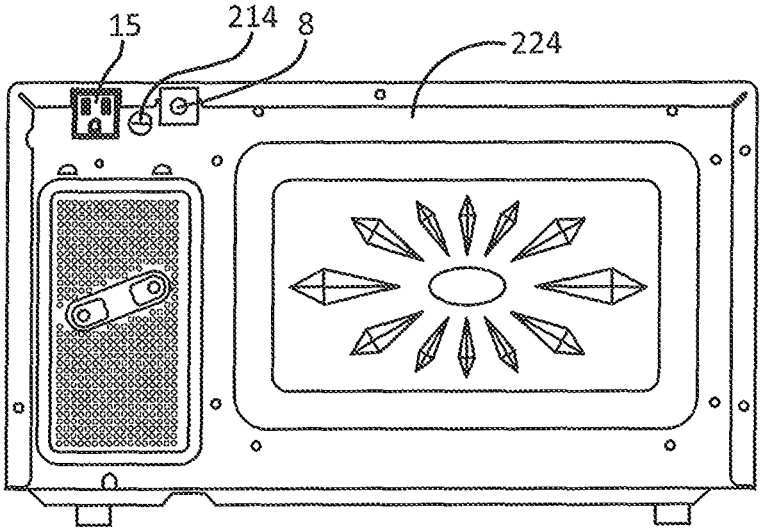

FIGURE 22

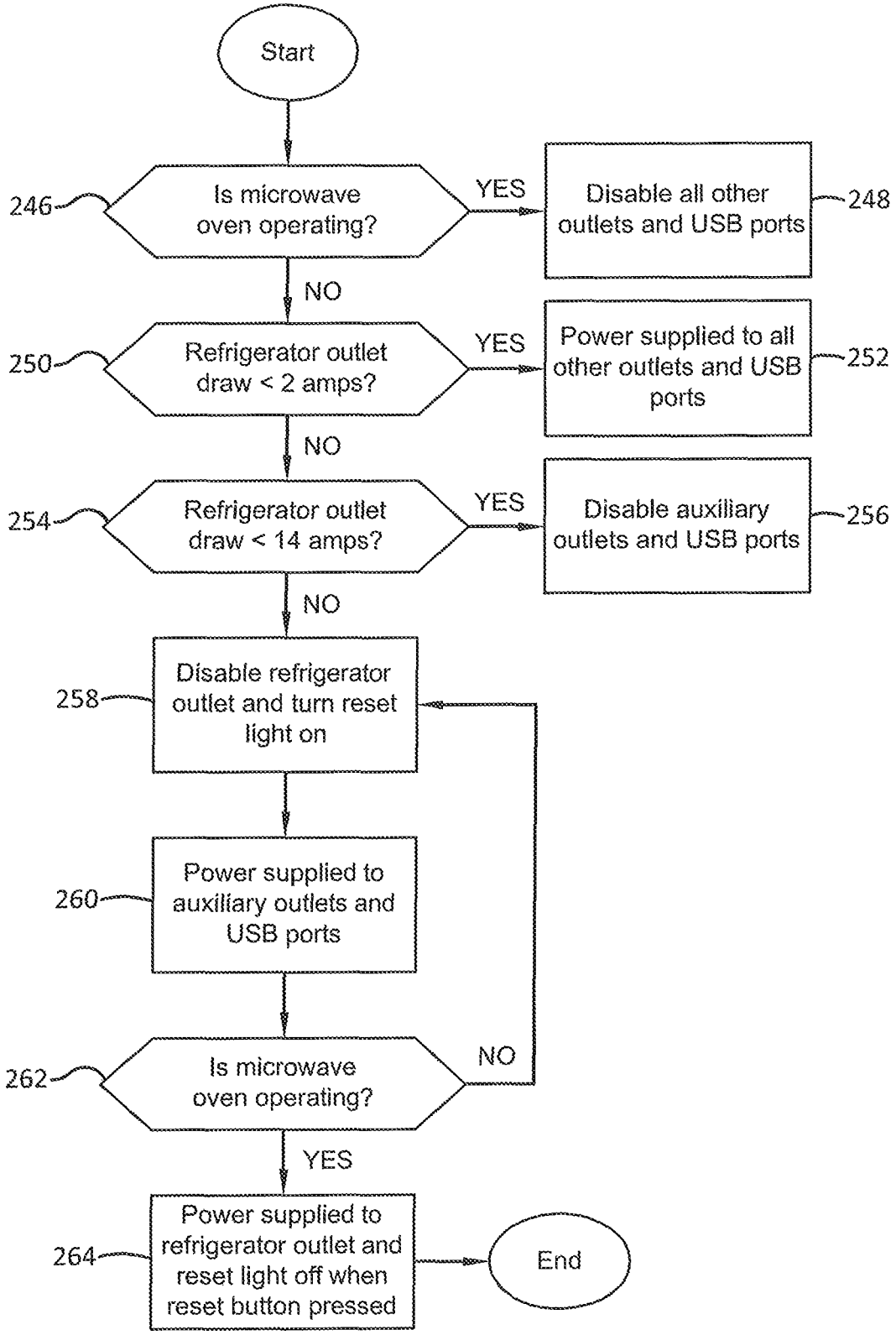
Start
246
Is microwave oven operating?
YES
Disable all other outlets and USB ports
248
NO
250
Refrigerator outlet draw < 2 amps?
YES
Power supplied to all other outlets and USB ports
252
NO
254
Refrigerator outlet draw < 14 amps?
YES
Disable auxiliary outlets and USB ports
256
NO
258
Disable refrigerator outlet and turn reset light on
260
Power supplied to auxiliary outlets and USB ports
262
Is microwave oven operating?
NO
YES
264
Power supplied to refrigerator outlet and reset light off when reset button pressed
End

FIGURE 23

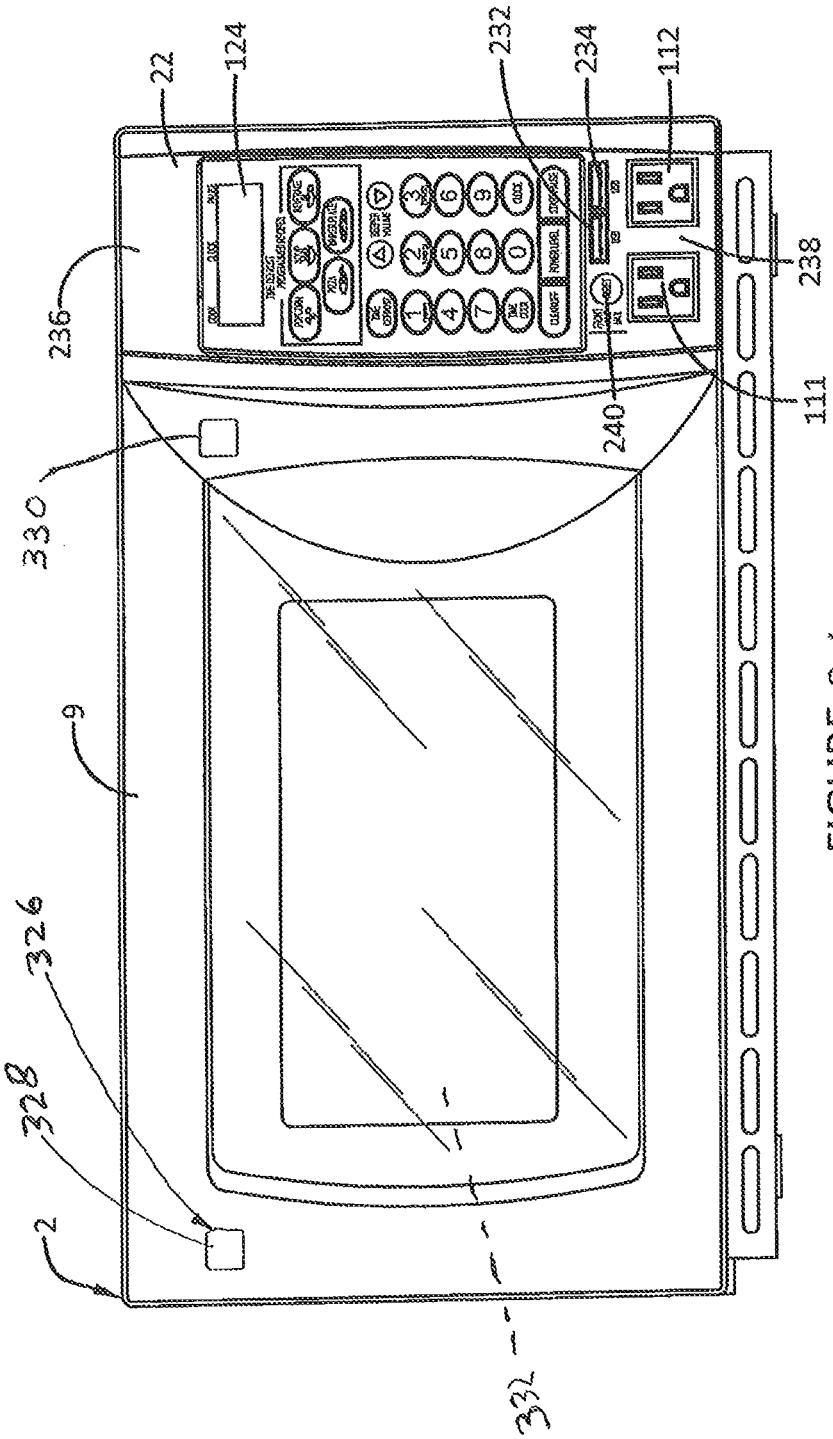

FIGURE 24

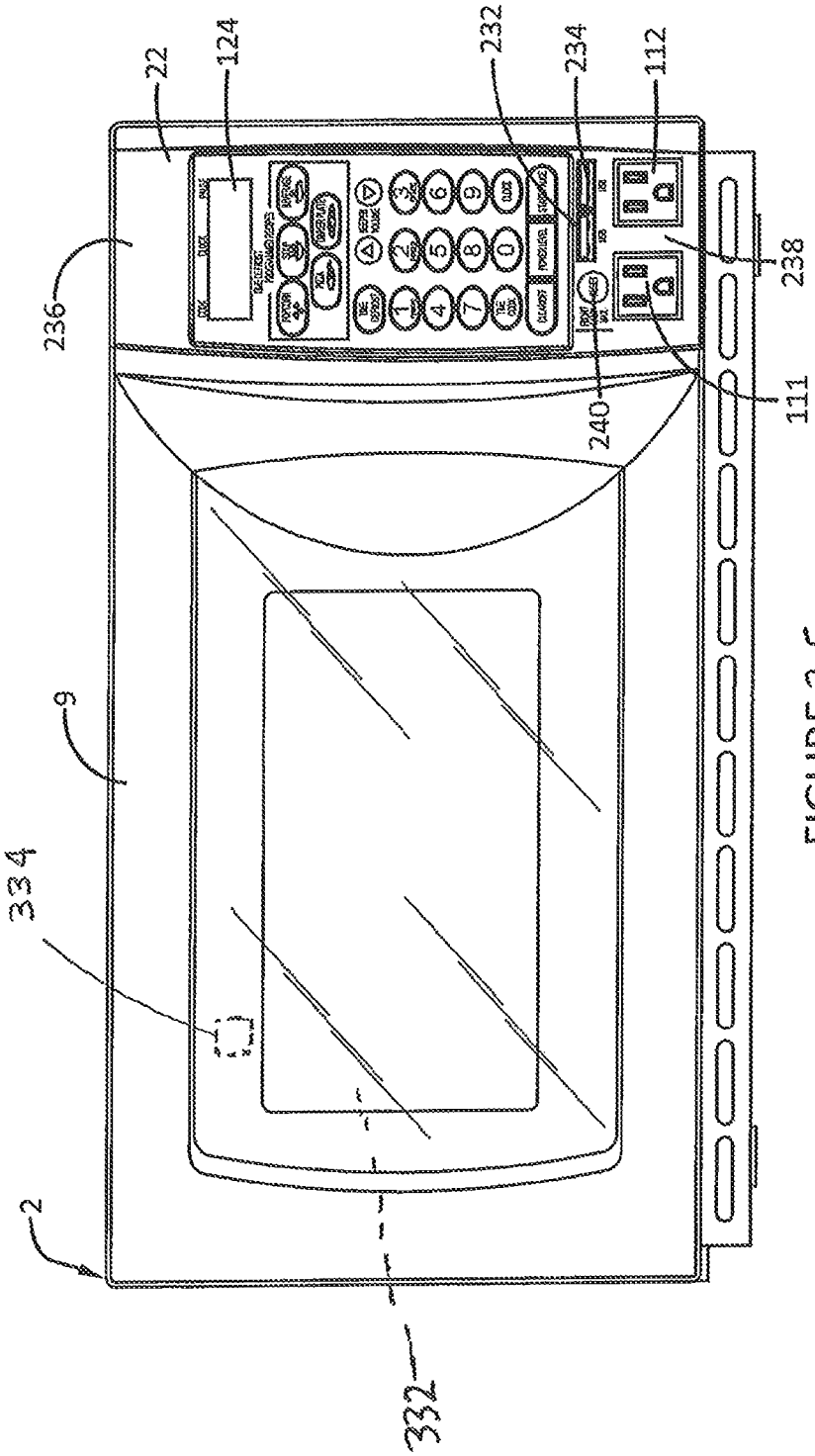

FIGURE 25

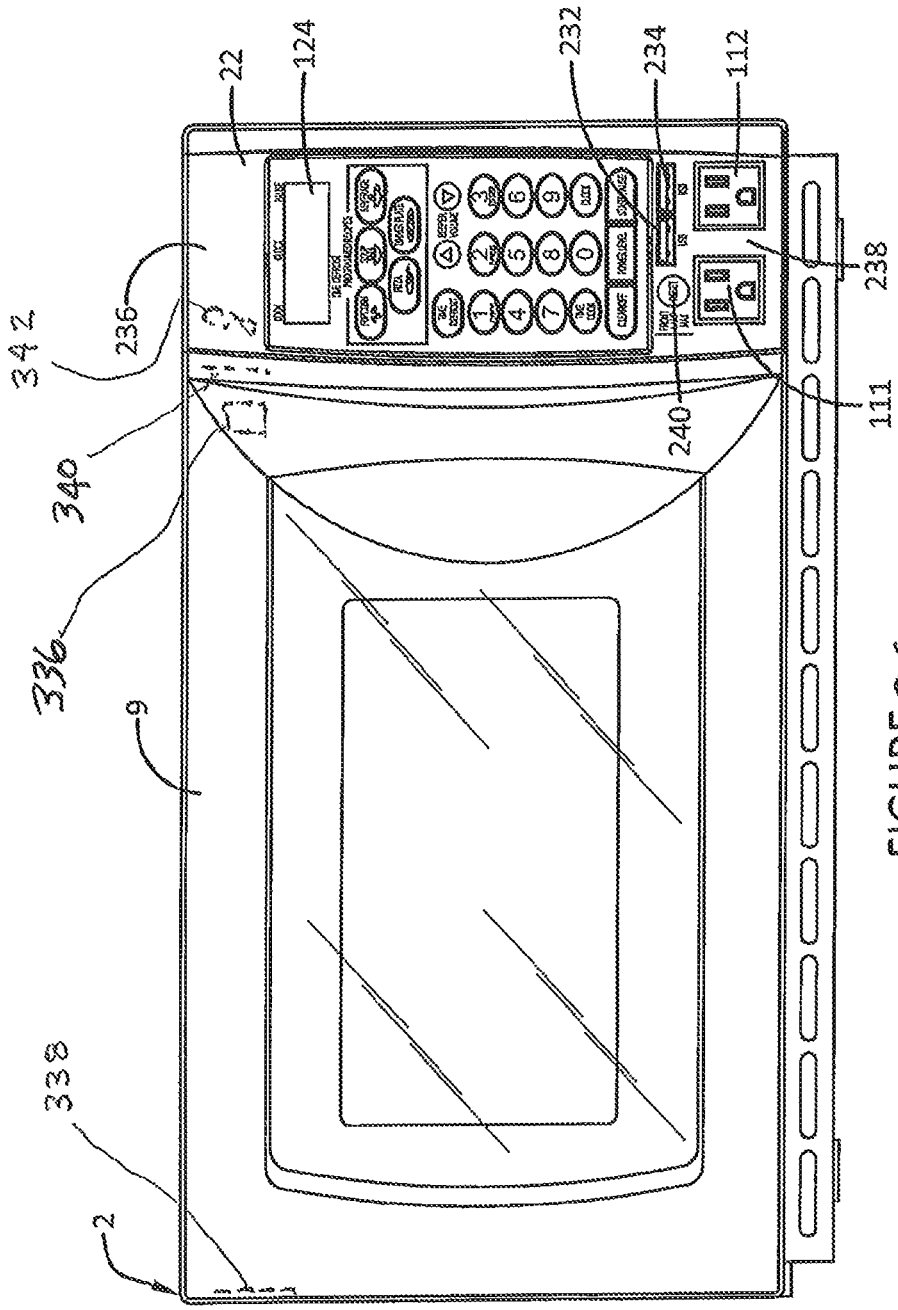

FIGURE 26

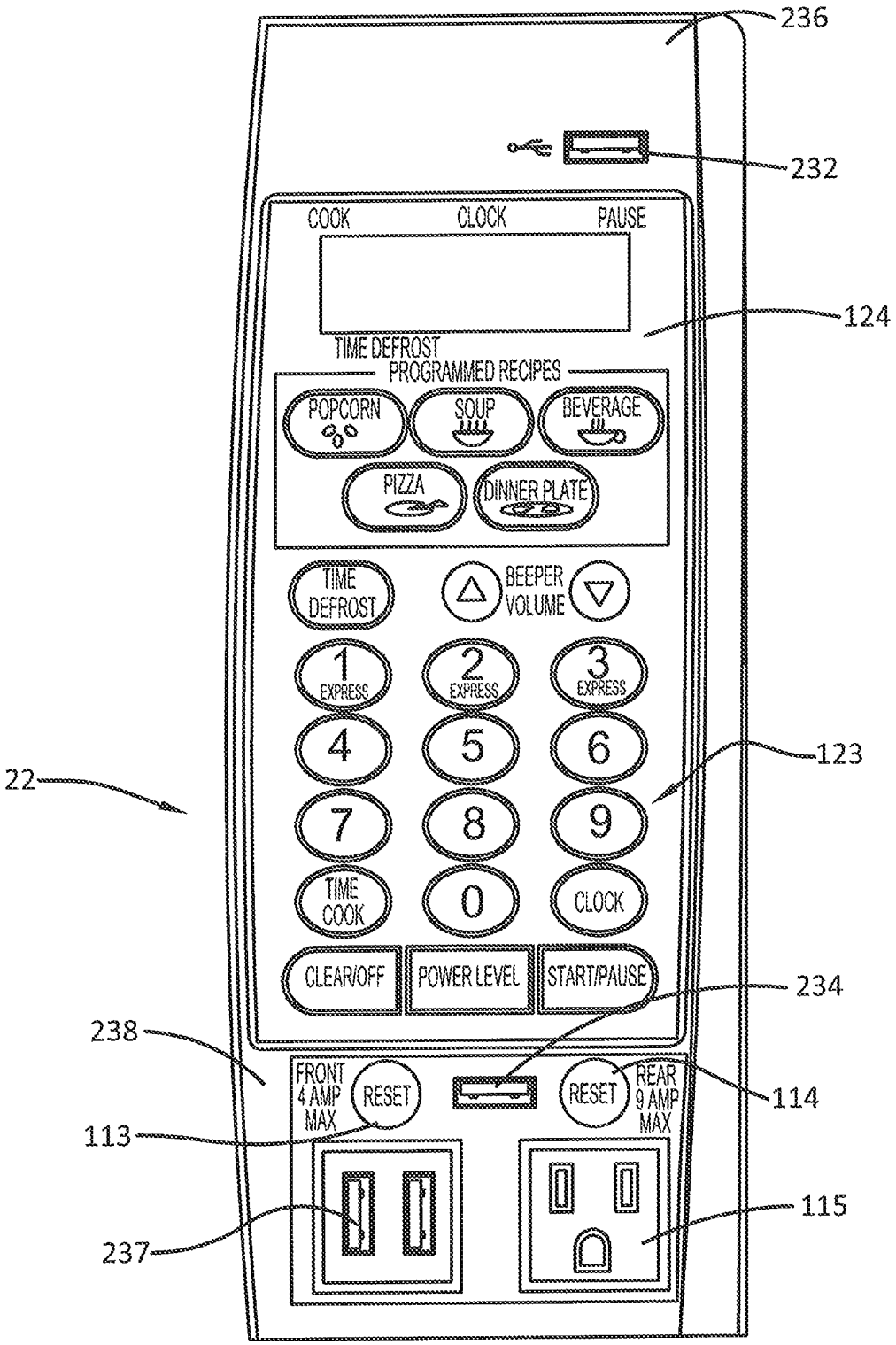
236
232
COOK
CLOCK
PAUSE
124
TIME DEFROST
PROGRAMMED RECIPES
POPCORN
SOUP
BEVERAGE
PIZZA
DINNER PLATE
TIME DEFROST
BEEPER VOLUME
1 EXPRESS
2 EXPRESS
3 EXPRESS
4
5
6
123
22
7
8
9
TIME COOK
0
CLOCK
CLEAR/OFF
POWER LEVEL
START/PAUSE
234
238
FRONT 4 AMP MAX
RESET
RESET
REAR 9 AMP MAX
114
113
115
237

FIGURE 27

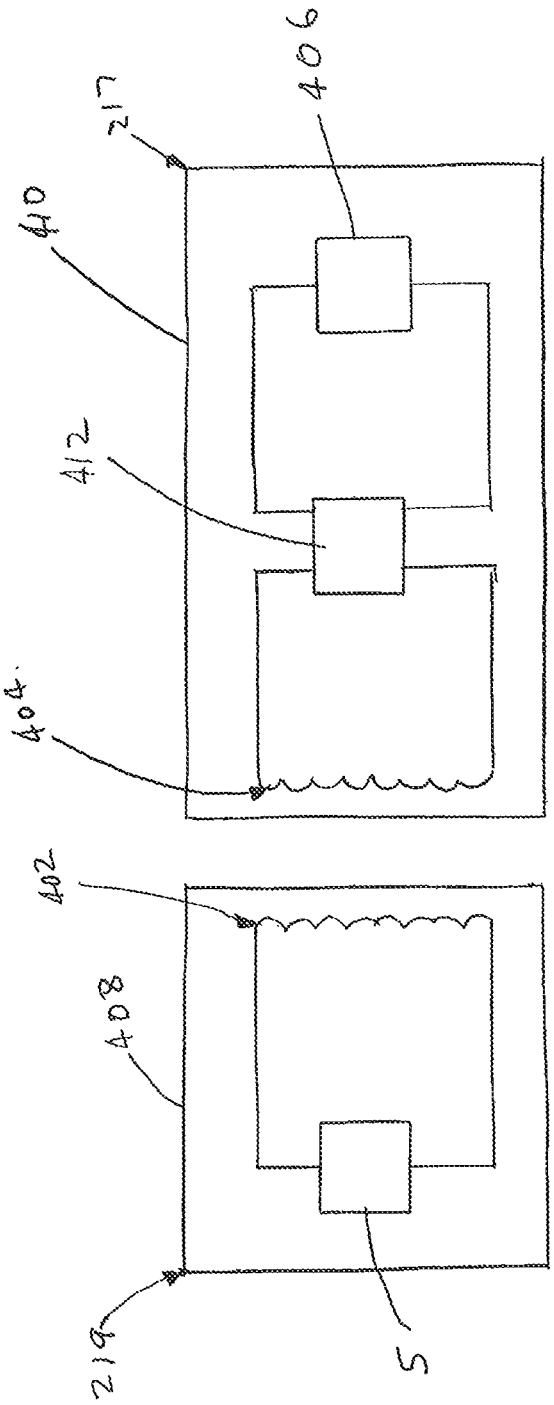

FIGURE 28

MULTIPLE LINKED APPLIANCE WITH AUXILIARY OUTLET

TECHNICAL FIELD

Exemplary embodiments relate to improvements to appliances. Specifically, exemplary embodiments relate to improvements to appliances that include compact refrigerator and microwave oven functionality.

BACKGROUND

Compact refrigerators are used for many different purposes. They are often found in dormitories, hotels, offices and other establishments. Compact refrigerators are also often used in housing units for storage of beverages in bar areas or entertainment areas. Compact refrigerators provide useful storage for refrigerated items without the requirement for the considerable floor space and power draw that is required for a full size refrigerator.

Compact refrigerators and associated appliances may benefit from improvements.

SUMMARY

In one exemplary embodiment, an apparatus is provided that includes a microwave oven. The microwave oven includes a radiation emitting microwave element and a microwave housing. The microwave housing bounds a cooking interior area. The radiation emitting microwave element is operative to irradiate the cooking interior area. The apparatus also includes a refrigerator. The refrigerator includes refrigerator housing. The refrigerator housing bounds a cooled refrigerator interior area. The refrigerator housing is in fixed operative connection with the microwave housing. The refrigerator includes a refrigerant compressor, or other refrigeration technology. The refrigerant compressor is operative to compress a refrigerant material. The refrigerant material is operative to cause cooling of the cooled refrigerator interior area. The apparatus includes at least one power control circuit. The at least one power control circuit is operative to cause electrical power to be selectively delivered to the microwave element and the compressor. One of the microwave element and compressor does not operate when the other of the microwave element and the compressor operates. A charging pad is provided on the microwave oven. The charging pad is configured for receiving an item to be charged by the charging pad. The microwave oven further includes at least one smoke sensor. In exemplary embodiments different types of smoke sensors may be used. An exemplary sensor includes a sensor emitter and at least one sensor receiver configured to receive radiation from the at least one smoke sensor emitter, wherein air of at least a portion of the cooking interior area extends intermediate of the at least one sensor emitter and the at least one sensor receiver. The apparatus also includes at least one safety circuit. The at least one safety circuit is in operative connection with the at least one sensor emitter, the at least one sensor receiver, and the microwave element. The at least one safety circuit is operative to cause the at least one sensor emitter to emit sensor radiation and the at least one sensor receiver to sense sensor radiation from the at least one sensor emitter while the microwave element operates during a cooking session. A determination is made that a transmission amount of sensor radiation from the at least one sensor emitter that reaches the at least one sensor receiver has fallen by at least a threshold amount during the cooking session, due to smoke in the cooking interior area. Responsive at least in part to the determination, the microwave element is no longer supplied with electrical power. Other features may be included in exemplary embodiments.

BRIEF DESCRIPTION OF THE DRAWINGS

The system of the application is explained in more detail below with reference to the accompanying drawings, in which:

FIG. **1** is a front perspective view of an exemplary embodiment of an appliance system of this application.

FIG. **2** is a rear perspective view of the embodiment of FIG. **1** showing an alternative arrangement.

FIG. **3** is a schematic block diagram of an embodiment of the exemplary system.

FIG. **4** is an electrical schematic diagram corresponding to the embodiment of FIG. **3**.

FIG. **5** is a schematic logic flow diagram of an exemplary embodiment.

FIG. **6** is a schematic logic flow diagram of another exemplary embodiment.

FIG. **7** is a schematic logic flow diagram of another embodiment.

FIG. **8** is a graph illustrating the duty cycles of the appliances in the system of FIG. **3**.

FIG. **9** is a block diagram of an alternate embodiment.

FIG. **10** is an electrical schematic diagram of the embodiment of FIG. **9**.

FIG. **11** is an illustration of a control panel of the embodiment of FIG. **9**.

FIG. **12** is a front view of the microwave oven according to another embodiment.

FIG. **13** is a side view of the microwave oven door of FIG. **12**.

FIG. **14** is a top perspective view of a charging pad on the top portion of a microwave oven.

FIG. **15** is an illustration of a control panel of an alternate embodiment.

FIG. **16** is an electrical schematic diagram of the embodiment of FIG. **15**.

FIG. **17** is a front view of the microwave oven according to another embodiment.

FIG. **18** is an electrical schematic diagram of the embodiment of FIG. **17**.

FIG. **19** is a front view of the microwave oven according to another exemplary embodiment.

FIG. **20** is an electrical schematic diagram of the embodiment of FIG. **19**.

FIG. **21** is a rear view of the microwave oven according the embodiments of FIGS. **12-19**.

FIG. **22** is a similar view as that of FIG. **21** except that the AC cord is shown.

FIG. **23** is a schematic logic flow diagram of an exemplary embodiment.

FIG. **24** is a front view of the microwave oven according to another exemplary embodiment.

FIG. **25** is a front view of the microwave oven according to another embodiment.

FIG. **26** is a front view of the microwave oven according to another exemplary embodiment.

FIG. **27** is an illustration of a control panel of an alternate embodiment.

FIG. **28** is a schematic diagram corresponding to the embodiment of FIG. **14** showing the charging pad and a device being charged.

DETAILED DESCRIPTION

A multiple linked appliance system **1**, for example, a combination microwave oven **2** and refrigerator **3** incorporating features described in the present application illustrated in the Figures. Although exemplary embodiments will be described with reference to the features shown in the drawings, it should be understood that other embodiments may have many alternate forms. In addition, any suitable size, shape or type of elements or materials could be used. The computer or controller devices described in this application may be constructed having one or several processors and one or several program product modules stored in one or several memory elements. For illustration, computer or controller components may be described as individual units by function. It should be understood, that in some instances, these functional components may be separated or combined in other components.

In the exemplary embodiments, the circuits described herein may comprise one or more circuits including processors which for purposes hereof corresponds to any electronic device that is configured via circuit executable instructions that can be implemented in either hardware circuits, software, firmware or applications that are operative to enable the circuits to process data and carry out the other actions described herein. For example, the circuits may include circuits that correspond to one or more or a combination of a CPU, FPGA, ASIC or any other integrated circuit or other type or circuit that is capable of processing data. The processors may be included in a computer, server or other type of electronic device. Further, the circuits described herein may include data stores that correspond to one or more of volatile or non-volatile memories such as random access memory, flash memory, magnetic memory, optical memory, solid state memory or other devices that are operative to store computer executable instructions and data. Computer executable instructions may include instructions in any of a plurality of programming languages and formats including, without limitation, routines, subroutines, programs, threads of execution, objects, methodologies and functions which carry out the actions such as those described herein. Structures for the circuits and processors may include, correspond to and utilize the principles described in the textbook entitled Microprocessor Architecture, Programming, and Applications with the 8085 by Ramesh S. Gaonker (Prentiss Hall, 2002), which is incorporated herein by reference in its entirety. Of course it should be understood that these circuit structures are exemplary and in other embodiments, other circuit structures for storing, processing, resolving and outputting information may be used.

In exemplary embodiments the refrigerator may be connected to a power supply that provides a connection that enables the microwave oven to be connected to the same electrical supply. A single plug, therefore, may serve to connect both appliances and the current required for each appliance may be supplied by the same supply cord and circuit. In exemplary embodiments power may be supplied by the 110V AC current outlet.

To make this combination attractive for use in dorm rooms, hotel rooms, recreational vehicles, tractor trailer cabs, and other similar locations, it may be necessary to assure that the peak current draws of both appliances are not demanded from the supply at the same time. Many household circuits are protected from overload conditions by an automatic circuit breaker that is activated when current in the circuit exceeds the breaker rating. This is 15 amps in many circuits.

The duty cycle of an exemplary refrigerator used in these combined systems includes a current spike that occurs during the first few seconds of operation. This is the start up current for the refrigerator compressor. The current draw is considerably reduced as the compressor attains its full operational speed. In typical refrigerator appliances the peak current may be in the range of 7 to 9 amps, while the steady state current may level off at 1.4 amps or less. A microwave oven demands a relatively steady 8 to 13 amps of cooking power during operation of the cooking element. It is apparent that an overload condition may occur when both appliances are placed in operation absent suitable control circuitry.

In an exemplary embodiment, a combination microwave and refrigerator system is constructed having a single electrical plug input supply. The electrical supply in the exemplary embodiment is directly connected to the microwave oven. The microwave oven is adapted to provide power to the refrigerator through a power supply outlet, and to auxiliary receptacles adapted for connection to devices that operate at a low power operation draw. The microwave oven includes circuitry including a processor based controller adapted to monitor operation of the refrigerator compressor and control the power to the microwave magnetron cooking element and other components. The current draws on the low power receptacles are separately monitored for control by the microwave controller. The microwave controller is adapted to balance the duty cycles of the connected appliances in operative connection therewith to avoid overload conditions. A control logic flow is implemented internally within the circuitry of the microwave controller. A receptacle or other power connecting power supply outlet for the refrigerator and the low power auxiliary receptacle may be implemented as part of the microwave control panel on the microwave oven.

In one embodiment, the auxiliary outlets are constructed to provide low power for the purpose of recharging batteries included in cellular mobile phones, personal media devices and digital cameras, in addition to operating lap top computers and other similar low power devices. The current to the auxiliary outlets is sensed by suitable circuitry in operative connection with the microwave controller.

In another embodiment, the power to the auxiliary outlets is disabled through operation of the microwave controller when the microwave magnetron is energized or whenever the current to the auxiliary outlets exceeds a preset value.

In one embodiment, a programmed control model for control logic flow is established and executed by the microwave controller. The model is dependent on the state of operation of the microwave cooking element or elements which are referred to herein as a magnetron. As part of the exemplary control model, the power draw of the compressor is monitored to sense operation of the compressor to compress refrigerant to provide cooling. When cooking power is demanded by the microwave the compressor is disabled by having electrical power thereto withdrawn by the control circuit for a preset minimum period. When power demand to the magnetron ceases, refrigerator compressor power is restored provided that the preset minimum period has expired.

In another exemplary embodiment of the control model, sensing circuits are operative to monitor current draw on the auxiliary outlets. The control model is adapted to cause the controller to disable the power to the auxiliary receptacles, if the microwave magnetron is in operation. In addition the auxiliary receptacles are disabled if a predetermined maximum current draw is sensed. Another control model is based

on operation of the refrigerator and operates to disable the auxiliary receptacles when the compressor is in the start up mode. Of course these approaches are exemplary and in other embodiments, other approaches may be used. Further while in the exemplary embodiment the controller is integrated with the microwave oven, in other embodiments the controller may be integrated with the refrigerator or other device, or may be configured as a separate component.

In one aspect of an exemplary embodiment, a non-transitory processor readable medium having processor executable program instructions embodied therein for operating at least one processor of a control circuit to control a system of multiple linked appliances having a microwave oven, a refrigerator, and an auxiliary power supply outlet is provided. The processor executable program code causes the control circuit to disable the refrigerator and the auxiliary power supply outlet, when the microwave demands high power such as magnetron cooking power, and enable the auxiliary power supply outlet when the microwave is not drawing cooking power.

One exemplary embodiment of a multi-appliance interconnected system **1** is illustrated in FIG. **1**. This embodiment consists of two appliances, a refrigerator **3** and a microwave oven **2**. Refrigerator **3** is electrically connected to microwave oven **2** by power cord **7** to refrigerator receptacle **15**, shown at the rear of the microwave **2** in FIG. **2**. Refrigerator **3** is generally subject to control by the microwave microprocessor controller which is alternatively referred to herein as power control circuit **4** of the microwave oven **2**. The power control circuit may be operative to cause electrical power to be selectively delivered to and/or withheld from the microwave magnetron and the refrigerator compressor. A single cord **8** provides input electrical power to the system **1** from receptacle **5** through microwave **2**. In the case where stand alone appliances are used, as shown in FIGS. **1** and **2**, microwave oven **2** is connected directly to power source **5**. The refrigerator **3**, as the heaviest component, is used as the base with the microwave oven **2** stacked on top. In the selection of the refrigerator **3**, it would be advantageous in some embodiments for the height of the refrigerator to be no more than 48 inches above the floor. This provides a more ergonomic operation of the microwave oven **2** for the user. In addition, in the stacked position of the appliances in an exemplary embodiment, the doors **9** and **10** of the microwave **2** and refrigerator **3**, respectively, are arranged in a common plane.

At least one power control circuit **4** serves as a controller for the operation of the microwave oven **2** and is also adapted to control the other components of system **1**, as shown in FIG. **3**. Power is distributed throughout the system **1** under control of microwave controller **4** and digitally operated switches such as relays **19** and **20** represented in FIG. **3**. It should be understood that in some embodiments the relays may control power delivery via mechanical contacts while in other embodiments, solid state relays may be used. Power is distributed to each of the appliances **2** and **3**, and to auxiliary low power receptacles **11** and **12**. In use lamps **13** and **14** in the form of LEDs or the like may be positioned adjacent to the auxiliary receptacles to indicate power being available from the adjacent receptacle or power to the receptacle being disabled. The low power auxiliary receptacles **11** and **12** are provided to permit convenient access for plugging in a low power device, for example, devices including rechargeable batteries, such as cellular phones, PDAs, or other electronic devices that do not demand high power. As shown in the graph of FIG. **8**, there are instances during which, if more than one of the appliances is in use, the cumulative current would cause an overload condition.

An exemplary control panel **22** of microwave oven **2** may be adapted to provide a display of the particular status of the controlling relays. For example, LEDs **13** and **14** may indicate that power to the outlets **11** and **12** are disabled or available. In one embodiment the lamps will light when power is available at the outlet and flash when disabled. In another embodiment the lamps will light when power is not available at the outlet and not activate when power is available at the outlet as a means to reduce the standby power draw. A button operated touch panel is used in the exemplary embodiment to provide manual control.

As shown in FIG. **4**, in order to control the power to the microwave **2**, refrigerator **3** and receptacles **11** and **12**, sensing circuits, may be coupled to the control circuit to monitor current draw by the appliance components and the auxiliary receptacles. A relay **20** is connected in the power line to the refrigerator and may be actuated by signals from controller **4**. In particular, according to an exemplary embodiment, sensing circuits **16**, as shown in FIG. **4**, have sensors **17** and **18** coupled to the power line of the auxiliary outlets **11** and **12** to monitor the current being drawn by a connected device. Sensors **17** and **18** may include current sensing transformers of the type available from Triad Magnetics of Corona, Calif. The signals generated by sensors **17** and **18** may be used to activate switches or other control components, such as relays **19**. Relays **19** may be actuated by control circuit **4** to enable and disable the delivery of power to the low power auxiliary outlets **11** and **12** in response to signals from sensors **17** and **18**. A maximum current may be set through the program logic associated with the at least one power control circuit **4** to prevent overload of the outlets **11** and **12**. In one embodiment of the system, the maximum current limit is set at 2 amps, and the control circuitry is operated to cease power delivery in situations where the power draw exceeds this amount. Of course this approach is exemplary.

In another embodiment, a clock function **21** included in the at least one control circuit **4** is used to provide timed delays during which, for example, refrigerator **3** would be prevented from undesirably rapid on/off cycles. When the compressor of the refrigerator **3** is disabled during microwave cooking operation, a time delay of 3 minutes is provided during which the compressor of the refrigerator **3** will remain disabled, even if microwave use is only for a short period. Control circuit **4** may be programmed to manage the power delivery to the components of the system to avoid overload conditions, while minimizing disruptions in the use of an individual appliance. A model of operative events and related control operations may be designed into the program instructions executed by at least one control circuit **4** to provide a control methodology as illustrated in FIGS. **5-7**.

In one embodiment, as illustrated in the block diagram of FIG. **3**, at least one control circuit **4**, constructed as part of the controller for microwave **2**, is adapted to receive and process the sensor signals and identify particular events in the system **1** related to a particular appliance or combination of appliance conditions. Circuit **4** controls the power to microwave **2** and refrigerator **3** and also low power receptacles **11** and **12** to avoid overload conditions. The circuit **4** is operative to execute the control methods illustrated and described below. In one exemplary embodiment, the circuit **4** is operative to control operations of microwave oven **2** and is adapted to execute the program instructions described

below. The control circuit is coupled directly to refrigerator outlet **15** and low power outlets **11** and **12**.

In one exemplary embodiment, shown in FIG. **1**, the outlets **11**, and **12**, are included as part of the front control panel of microwave oven **2**. In FIG. **2**, in another embodiment, the auxiliary receptacles **11** and **12** and refrigerator receptacle **15** are accessible at the rear of the microwave oven **2**. In these alternative embodiments, the microwave oven **2** is connected by supply cord **8** directly to power supply receptacle **5**. Refrigerator **3** is connected by power cord **7** to receptacle **15** on microwave oven **2** as shown in FIG. **2**.

In one exemplary embodiment, control models for program logic flows are established as shown in FIGS. **5-7** for execution by the at least one control circuit **4**. These models can be in the form of processor executable instructions stored in a computer readable medium, such as software or firmware associated with the circuit **4**. The models shown are, in the first instance, dependent on the state of operation of microwave oven **2**. The current demands of the microwave **2** when drawing cooking power are generally the most significant contribution to overload, as shown in FIG. **8**. To avoid overload conditions, power to the low power receptacles **11** and **12** and refrigerator receptacle **15** is disabled during microwave magnetron operation. If the refrigerator **3** compressor is drawing power when the microwave **2** is turned on to commence cooking, the power to the refrigerator compressor is turned off and clock function **21** is used to determine a predetermined period during which the compressor of refrigerator **3** cannot be restarted. A time delay, for example, of 3 minutes, may be set through programming of the control circuit and when this delay period is expired, receptacle **15** may again be enabled, providing the control circuit determines in accordance with its programming and sensed parameters that microwave cooking operation has ceased. This prevents a too rapid restart of the compressor that may otherwise result in damage.

In some exemplary arrangements, the control circuitry of the power controller may operate responsive to sensing the power draw of the refrigerator and the cooking element of the microwave oven so as to detect the power draw reaching a threshold which should not be exceeded to prevent an overload condition. In other exemplary arrangements, the control circuitry may operate to detect inputs that may be provided by input devices and which are operative to cause power drawing devices such as the magnetron of the microwave oven or the compressor of the refrigerator to operate. In such arrangements, the control circuitry may operate to detect the signal from a thermostat within the refrigerator which indicates that the thermostat is signaling that the refrigerant compressor should operate to cause the temperature to be lowered within the cooling area of the refrigerator. In such arrangements, the control circuitry may operate to detect the signal from the thermostat and prevent the delivery of power to the compressor in situations where the cooking element of the microwave oven is operating. In such embodiments the control circuitry may delay the supply of power to the compressor until the cooking element of the microwave oven has ceased operation. Likewise an exemplary embodiment of the control circuitry may be operative to detect inputs to the control panel of the microwave which are provided by a user to commence microwave operation. In response to the detection of such inputs, the exemplary control circuitry may be operative to first cause a determination to be made as to whether the refrigerator is drawing the level of power that indicates that the compressor thereof is operating. In response to a determination that the refrigerator is drawing a level of power that is incompatible with operation of the microwave cooking element, the exemplary control circuitry may be operative to cause power to the refrigerator compressor to be withdrawn. Thereafter the control circuitry may be operative to cause power to be supplied to the cooking element of the microwave. Further in exemplary embodiments, the control circuitry may also monitor the power draw of auxiliary outlets or other power delivery points to assure that the level of draw that is currently occurring will not be an impediment to an operation that is being requested by an input device of the apparatus before the apparatus begins to operate in a manner that will cause increased power draw. Thus the exemplary apparatus enables the preventative action of discontinuing operation of a power drawing component before instituting operation of another component that draws a high level of power. Of course it should be understood that this approach is exemplary and in other embodiments, other approaches may be used.

In the embodiment shown in FIG. **5**, if low power is demanded at receptacle **11** or **12** and microwave oven **2** is not in use for cooking, power is supplied to the low power receptacles, provided further, that the current demand at an individual outlet does not exceed a preset limit, for example, 2 amps. Since the auxiliary outlets may be enabled during refrigerator compressor operation, there may be an overload generated at peak compressor operation. In one embodiment the control circuitry acts to disable the auxiliary outlets during compressor startup to prevent accidental overload of the system. Therefore as illustrated in the logic flow diagram of FIG. **5**, control circuitry may be adapted to check the operational status of the refrigerator, as well as the microwave oven, prior to enabling the auxiliary outlets.

FIGS. **9-11** illustrate another embodiment. In this embodiment the sensing components **117** and **118** are configured to reduce the risk of overload by the combined demands of the auxiliary outlets **111** and **112** and the refrigerator outlet **115**. In the exemplary configuration as shown in FIG. **10**, current sensor **117** is configured to monitor the current draw through the refrigerator outlet **115** and the circuitry is operative to limit the refrigerator current draw at the outlet **115** so that it does not exceed 10 amps. Current sensor **118** is connected to monitor the combined current in the auxiliary outlets **111** and **112**. Current sensor **118** and the circuitry is to limit the combined auxiliary outlet current draw to 4 amps. In this manner the risk of overload is minimized. As represented in the block diagram of FIG. **9**, the microwave **102** has at least one control circuit comprising controller **104** that is operatively connected to power supply **105**. Clock function **121** which is shown schematically separately but may be part of the controller provides a timing device to determine a restart delay for power to refrigerator **103**. Sensing circuit/sensor **117** is to monitor the current demanded by refrigerator **103** and sensing circuit/sensor **118** is connected to low power receptacles **111** and **112** is operative to monitor the combined current in receptacle **111** and **112**. In the exemplary embodiment the control circuitry is shown as operative to control the availability of electrical power to some devices as a whole. For example, if the control circuitry operates to cause power not to be available to the refrigerator, all components of the refrigerator, such as the internal lights, air circulation fan, etc., are not supplied with electrical power, in addition to the compressor, which is the component which is most likely to draw power at a level which may be excessive. However in other embodiments, the control circuitry may be configured to deliver and withhold power

selectively to individual refrigerator components or groups of such components. Thus in such embodiments the power control circuitry may be operative to withdraw power to the high power draw components (s) such as the compressor, while still making power available to other low power draw components such as the internal fan and/or lights.

Likewise in exemplary embodiments, the power control circuitry is operative to selectively allow power to be available or withdrawn from components of the microwave. For example, exemplary embodiments control the availability of power to selected components of the microwave such as the magnetron and the auxiliary outlets. The power control circuitry of exemplary arrangements may operate to maintain electrical operation of certain components, even though electrical power to other components is not available. For example, an exemplary controller may operate to maintain power to the clock display output on the control panel at all times. Further some exemplary arrangements may assure that power is maintained to control circuitry with programmed settings so that programmed data is not lost. This may include for example programmed data concerning a future time to turn on the cooking function, the power level and/or how long to cook. This way if the memory of the microwave has been programmed to begin to cook a food item placed inside the microwave oven at a future time so it is cooked by the time a person returns (for example) the programmed instructions to carry out those instructions will not be lost. Alternatively, configuration data that enables the microwave oven controller to communicate in a wireless network or with other devices will be preserved even though the control circuitry operates to cause electrical power not to be available to certain components. Of course these are merely examples.

It should be understood that for purposes hereof when it is stated that power is withdrawn or not made available to a microwave, refrigerator or other assembly of components, the terminology refers to not making such power available to the entire assembly or to only certain selected components that draw high power such as the refrigerant compressor or magnetron. Likewise herein references to the microwave or the refrigerator operating or running refers to operation of the respective high power draw components such as the magnetron or the compressor, for example.

In the exemplary embodiment, as shown in FIG. **11**, a control panel **122** is arranged with a keypad **123** for manual control and a display **124**. Auxiliary outlet **111** is shown as accessible from the front and is associated with a status LED indicator and reset button **113** that may be caused to be operative during use and switch to a flashing mode when the microwave is drawing cooking power. Refrigerator outlet **115** is also accessible on the front panel and is associated with an LED indicator and reset button **114**. Similarly LED indicator **114** is controlled to be on by being illuminated during use of the refrigerator and to switch to a flashing mode when the microwave is drawing cooking power. In another exemplary embodiment, the status LED indicator and reset button **113** may be caused to be off during use and switched on or to a flashing mode when the microwave magnetron is drawing cooking power. Similarly, in this embodiment, the LED indicator **114** is controlled to be off during operation of the refrigerator compressor and switched on or to a flashing mode when the microwave radiation cooking element is operating.

A further embodiment of the logic flow operational model is shown in FIG. **6**. In this model, the refrigerator compressor draws or demands power. This may be triggered by a temperature rise of the refrigerator interior area within the housing of the refrigerator and involve start up of the refrigerator compressor with an associated peak power demand. If the microwave cooking element is sensed by the control circuitry as currently drawing cooking power, the programming of the control circuitry causes power not to be available the refrigerator so that operation of the refrigerator compressor will be delayed. If the microwave cooking element was on and subsequently cycled off, the clock function **21** must be checked by the controller to determine if power availability to the refrigerator to restart can occur. Under some circumstances, it may be necessary to give the refrigerator compressor priority to prevent an undesirable rise in temperature. In the latter instance, the control circuit can be coupled to the refrigerator temperature sensor to execute a programmed sequence during which the microwave cooking element will be disabled by not having power supplied thereto to allow the refrigerator to operate long enough to return to proper operating temperatures.

In the embodiment of FIG. **7**, the exemplary control circuitry operates to give priority to the power demands of the microwave oven, as indicated above. Use of the receptacles **11**, **12**, and **15** are, therefore, caused to be disabled during microwave cooking operation. The operational models which carry out the logic represented in FIGS. **5-7**, may be established by logic flows implemented by instructions that are programmed or imbedded in the control circuitry of controller **4**.

In this manner a system of linked appliances, including a microwave oven, refrigerator, and at least one low power draw device or appliance may all be connected through a common supply cord to a receptacle providing house current or other electrical power level without the risk of inconvenient interruptions or damage during use caused by overloads.

It is also advantageous to provide such a combination microwave/refrigerator system that also provides auxiliary outlets for low power applications, such as for the purpose of recharging batteries in cellular phones, operating lap top computers and other low power devices, while controlling the operation of the appliances to avoid overload conditions.

In another exemplary embodiment as illustrated in FIGS. **12** and **13**, the auxiliary outlets or electrical power receptacles **211**, **212** may be included as part of the front control panel **222** of the microwave oven **202** and located on the upper portion **270** of the front control panel **222**. The auxiliary outlets **211**, **212**, front control panel **222** and microwave oven **202** are similar to auxiliary outlets **11**, **12**, front control panel **22**, and microwave oven **2** except as discussed below. In this exemplary embodiment, the auxiliary outlets **211**, **212** are positioned side by side with respect to each other with each of the auxiliary outlets **211**, **212** being at the same height as the other. The auxiliary outlet **211** of FIG. **12** may be associated with a status LED indicator and reset button **213**, which is located on the lower portion **272** of the front control panel and in vertical alignment with the auxiliary outlet **211**. The status LED indicator and reset button **213** may be caused by the control circuitry of the controller to be on during use and switched to a flashing mode to indicate that power is not available therefrom when the microwave oven **202** is drawing cooking power. The auxiliary outlet **212** of FIG. **12** may be associated with status LED and reset button **214**, which is located on the lower portion of the front control panel and in vertical alignment with the auxiliary outlet **212**. The status LED indicator and reset button **214** may be caused by the controller to be on during use and switched to a flashing mode to indicate that power is not available therefrom when the

microwave oven **202** is drawing cooking power thereto is withdrawn. In another exemplary embodiment, the status LED indicator and reset button **213** may be caused to be off during the time power is available for use and switched on or to a flashing mode when the microwave oven is running and power thereto is withdrawn. Similarly, in another embodiment, the status LED indicator and reset button **214** may be caused to be off during power availability and switched on or to a flashing mode when the microwave oven is running or the refrigerator is running and the controller causes power not to be available. Other elements and operational features may be similar in structure and function as that of the embodiments shown in FIGS. **1-11**. Thus, the same reference numbers will be used in this exemplary embodiment to indicate elements that are similar in the embodiments shown in FIGS. **1-11**.

Smart technology may be integrated in some of the exemplary embodiments. For example, a user may be able to monitor and/or control the refrigerator **3** such as by turning it on and off remotely by a remote device **217**. The remote device **217** may include a hand held device such as a cellular phone. The cell phone may also be a smart phone. In some exemplary embodiments, the refrigerator, the microwave and/or the controller may include circuitry suitable for communication in a wireless network. Such a wireless network may be established in the facility, residence, office or other location where the combined refrigerator and microwave appliance is operated. Such devices may include circuitry that enables transmission of wireless signals to and from such components. Such communications may include communications of operational properties such as operating status, temperature, programmed values or other information that is pertinent to the operational condition of the particular device. In further exemplary arrangements, circuitry may be operative to enable received wireless messages to modify the operational condition and/or the programming of the particular device.

For example in some exemplary arrangements, the user may be able to communicate from a wireless phone via cellular or WiFi connection to determine that the refrigerator is operating, the temperature therein, the operational status of the compressor or other items. Alternatively and/or in addition, the user may be able to remotely control components of the refrigerator. These may include, for example, the ability to remotely turn on the internal light within the refrigerator and to view the food items currently housed within the refrigerator via one or more electronic cameras positioned therein. This may enable a user, for example, to determine that they need to purchase additional groceries or other items for purposes of an upcoming meal or other activities. Alternatively and/or in addition, in some exemplary embodiments, instructions may be utilized to change the temperature within the refrigerator. This may be done, for example, to chill certain grocery items that may need to be cooled or frozen for certain purposes. Of course these approaches are exemplary.

Likewise the microwave may include interface circuitry which enables the remote monitoring of the condition of the microwave components via a remote wireless device. This may include, for example, determining the periods of past operation and current status of the microwave such as whether it is currently being used to cook items. Alternatively and/or in addition, the remote monitoring capabilities may include determining the programmed status of the controller of the microwave such as the controller being programmed to cook an item housed in the microwave at a set future time or for a particular duration at a particular power level. Alternatively and/or in addition, the remote operational capabilities associated with the microwave circuitry may include the ability to turn on an internal light within the cooking chamber of the microwave and to view via a camera whether an item is contained therein. Further such remote capabilities may also include the ability to remotely change the program parameters so as to initiate cooking at a different time or at a different power level. Likewise exemplary arrangements may include having the wireless interface in operative with the power control circuit to provide the ability to monitor the current status of power draw on auxiliary outlets, the occurrence of alarm conditions, or the current status of other connected devices. It should be understood that such capabilities may be implemented in the controller circuitry or in separate circuitry of the microwave and/or the refrigerator. Further the exemplary arrangements may utilize communications interface capabilities included in circuitry of the controller to facilitate monitoring and operational control of the appliance. Of course these capabilities are exemplary and in other embodiments, other approaches may be used.

In an exemplary embodiment a charging pad **219** (FIG. **14**) may be provided on the microwave oven **2** or other suitable location to receive a smart phone or other chargeable device for purposes of charging the device. For example, a wireless charging pad **219** may be positioned on top **225** of the microwave oven **2** for recharging the smart phone or other device. The charging pad **219** may be built into the top **225** of the microwave oven **2** or may be a separate component that is mounted to the top **225** of the microwave oven **2** or other location. The exemplary charging pad **219** includes an inductive charging pad and includes a recessed area **220** for receiving an item to be charged such as the smart phone. The control circuitry may include or be in operative connection with a wireless interface **221** configured for communicating with the remote control device **217** for controlling the microwave or refrigerator and work in conjunction with the control circuitry to perform functions such as removing the supply of electrical power to the microwave oven **2** and/or refrigerator **3**. In an exemplary arrangement, USB ports **223**, **224** may be provided in the area of the charging pad **219**. Alternatively, or in addition, power outlets may be provided in proximity to the charging pad **219**. Alternatively, the charging pad **219** may be provided on the front, side, rear or bottom of the microwave oven **2**, or at another suitable location in connection with the combined appliance structure.

The exemplary charging pad **219** may utilize inductive or wireless charging, which uses an electromagnetic field to transfer energy between the charging pad **219** and the device being charged. In general, the charging pad **219** may include a primary inductive coil **402** (FIG. **28**) in connection with circuitry that is operative to create an alternating electromagnetic field that is received by a secondary inductive coil **404** (FIG. **28**) connected to the circuitry of the device being charged such as device **217**. Power from the electromagnetic field is converted back into electric current to charge a battery **406** (FIG. **28**) in the device. FIG. **28** shows an exemplary arrangement in which the charging pad **219** utilizes inductive charging to charge the device **217**. In this arrangement, the charging pad **219** includes an inductive charging station **408** and the primary inductive coil **402**. The power source **5** provides electrical power to the inductive charging station **408** and the other components of the charging pad **219**.

The inductive charging station **408** is provided for inductively charging the device **217** and may be built into or

otherwise attached to the charging pad **219**. The inductive charging station **408** may include the primary inductive coil **402** that is connected to the power source **5** for the microwave oven **2**. The recessed area **220** may define a cover of the charging pad **219** that covers the primary inductive coil **402** and provide a surface on which the remote device **217** may be placed for charging. The inductive charging station **408** may also include one or more capacitors coupled in series and/or parallel with the primary inductive coil **402** to form an LC circuit. The inductance value of the primary inductive coil **402** and the capacitance value of the capacitor or capacitors may be selected to achieve a desired resonant frequency which corresponds to a frequency of a coil and circuitry in the device being charged, but it should be noted that this exemplary arrangement is not limited to any particular inductance and/or capacitance values and/or any particular power source ratings.

The device **217** or other device to be charged may include the battery **406** that provides electrical power to the components and circuitry of the device. The battery **406** may comprise a rechargeable battery or batteries including lead acid, nickel cadmium (NiCad), nickel metal hydride (NiMHi), lithium ion (Li-ion) or lithium ion polymer (Li-ion polymer) batteries. The device may include any number of batteries, the size and rating of which may vary. The battery **406** may also comprise power conduits, connectors, receptacles, battery connectors, or power cables coupled with batteries.

The device **217** or other device to be charged may include an inductive charger **410** for charging the battery **406** when the device **217** is placed on or in the vicinity of the inductive charging station **408** of the charging pad **219**. The inductive charger **410** may be built into or otherwise attached to the device to be charged. As schematically represented in FIG. **28**, the inductive charger **410** may include the secondary inductive coil **404** and a charging circuit **412** that is connected to the battery **406**. The inductance value of the secondary inductive coil **404** may be selected to correspond or complement the inductance value of the primary inductive coil **402**, but it should be noted that in exemplary arrangements the secondary inductive coil is not limited to any particular inductance value. Likewise, the power rating of the charging circuit **412** may be selected to match or complement the rating of the battery **406**. The two inductive coils **402**, **404** in proximity combine to operate in a manner similar to the principles employed in an electrical transformer. Further in some embodiments greater distances between primary and secondary inductive coils and/or more effective charging can be achieved when the inductive charging system uses resonant inductive coupling. Of course the described approaches are exemplary and in other embodiments other approaches may be used. In some exemplary embodiments the charging pad may be in operative connection with the control circuitry that controls power availability to components of the device. For example, the control circuitry may operate in accordance with its programmed instructions to cause power to not be available to the charging pad when the microwave draws cooking power.

Alternatively or in addition the control circuitry may be operative to cause power not to be available to the charging pad responsive to power draw by the refrigerator compressor, the auxiliary outlets or other items, and/or cumulative power draw of multiple items.

As seen in FIGS. **16**, **18**, and **20**, a safety sensor which is alternatively referred to herein as a safety circuit **226** such as a smoke or gas sensor may be provided in connection with the microwave oven **2**. The smoke sensor **226** operates in connection with exemplary control circuitry to turn off the microwave oven upon sensing smoke or polluted air indicative of a potentially dangerous condition such as excessive smoke generated from overcooked food. The exemplary safety sensor **226** may be powered on or otherwise operational when the microwave oven is in operation. The sensor circuitry may operate responsive to processor executable instructions to determine the optimal activation point. The exemplary smoke sensor may be battery-powered or powered by the house current that powers the combined appliance with an optional battery backup when the power from the house current is out. The smoke sensor may include an ionization smoke sensor that uses a radioisotope, typically Americium-**241**, to ionize air. The ionization smoke sensor circuitry operates to turn off power to the magnetron cooking element of the microwave oven upon sensing a difference due to smoke indicative of a potentially dangerous condition. The smoke sensor alternatively may include a radiation type smoke detector that may contain a source emitter of infrared, visible, or ultraviolet light (typically an incandescent light bulb or light-emitting diode), a lens, and a photoelectric or other type of radiation sensing receiver (typically a photodiode) and suitable control circuitry.

An exemplary sensor **226** may include an alcohol sensor that is coupled with a thermistor **228**. An exemplary alcohol sensor **226** may operate in a set temperature range, such as from 32 to 104 degrees Fahrenheit. When a set level of heating is sensed by the thermistor **228**, the thermistor **228** through suitable control circuitry causes the alcohol sensor **226** to turn on and become operational and check for properties of the gas within the interior area of the microwave.

If the exemplary alcohol sensor **226** is operational due to the sensing of the set level of heating and senses polluted air that is indicative of a dangerous condition, a shutdown signal is outputted by the alcohol sensor to the controller **104**. Upon receiving the shutdown signal, the controller **104** determines that the radiation cooking emitting element of the microwave oven **2** should be shut down and causes the magnetron of the microwave to shut down through the withdrawal of electrical power. If (after the alcohol sensor is caused to be turned on by the thermistor) the alcohol sensor **226** senses air that is not indicative of a dangerous condition such as the air produced by normal cooking of food in the microwave oven **2**, the alcohol sensor circuitry will not send a shutdown signal to the controller **104** and the controller allows the microwave cooking activity to continue.

Alternatively or in addition, a fault indicator **230** may be coupled to the control circuitry of the controller **104** or other circuitry to indicate that there is a dangerous condition upon detection by the alcohol sensor **226**. For example, the fault indicator **230** may be a buzzer that is activated in response to the alcohol sensor **226** sensing polluted air indicative of a dangerous condition. In another example, fault indicator **230** may include the display **124** displaying a fault message such as "E-1" in response to the alcohol sensor **226** detecting polluted air indicative of a dangerous condition. Alternatively the fault indicator may output one or more signals, such as wireless alarm signals that can be detected by a receiver of an alarm system or through a remove device such as a smart phone.

An exemplary embodiment may include a combination of fault indicators. For example, upon the alcohol sensor **226** sensing air that is indicative of a dangerous condition, a shutdown signal is outputted by the alcohol sensor **226** to the controller **104**. Upon receiving the shutdown signal, the controller **104** determines that the microwave oven **2** should

be shut down and causes the radiation emitting cooking element of microwave oven **2** to be shut down. In addition in an exemplary embodiment, a buzzer is activated and the display **124** displays a fault message such as "E-1" in response to the alcohol sensor **226** sensing polluted air indicative of a dangerous condition.

The alcohol sensor **226** may be reset automatically responsive to the alcohol sensor **226** no longer detecting gas indicative of the dangerous condition. Alternatively or in addition, the alcohol sensor **226** may be reset upon sensing by a suitable switch, opening of the microwave door **9** of the microwave oven **2**. The display may display a "bar" or other suitable icon to indicate that the alcohol sensor **226** is turned on. Other types of suitable safety sensors may also be used instead of the alcohol sensor to detect a dangerous condition within the cooking area of the microwave.

In addition to one or more sensors which detect the gases generated from cooked food, the sensor **226** may include a temperature sensing capability such as, for example, using the thermistor **228** and related elements mentioned above.

Referring to FIG. **24**, in another exemplary embodiment, the safety sensor which is alternatively referred to as a safety circuit may comprise an infrared sensor **326**. The infrared sensor **326** may include two oppositely positioned infra-red disposed infrared sensor elements in the form of a sensor emitter **328** and sensor receiver **330** (schematically shown in FIG. **24**) provided on the microwave oven and located in the microwave's cavity **332**. The exemplary infrared sensor **326** operates as follows. The sensor emitter **328** emits radiation and the sensor receiver **330** senses sensor radiation from the sensor emitter **328** while the microwave element operates during a cooking session. When smoke that is indicative of a dangerous condition passes in between the infrared sensor elements **328**, **330**, a determination is made by the safety circuit that a transmission amount of sensor radiation from the sensor emitter reaching the sensor receiver has fallen by at least a programmed threshold amount during the cooking session, due to smoke in the cooking interior area. Responsive to the determination, the cooking element of the microwave oven is caused by the safety circuit to be no longer supplied with electrical power. The exemplary safety circuit may use the smoke point of oil or similar food products as the basis for its threshold amount, so that normal smoke emitted during the cooking or heating of food or beverages will not cause the infrared sensor **326** to deactivate cooking operation. The exemplary infrared sensor **326** would not require interaction from the microwave user. The exemplary safety sensor may be operative to cause an initial transmissivity level of sensor radiation that reaches the sensor receiver from the sensor emitter early in the cooking session to be stored in a data store or other memory associated with the safety circuit. The determination of a level of smoke corresponding to a dangerous condition is made in this embodiment responsive to circuitry operating in accordance with programmed instructions to detect that the transmission amount of sensor radiation reaching the sensor receiver has dropped by the threshold amount from the initial transmissivity level during the cooking session.

Referring to FIG. **25**, in another exemplary embodiment, the safety sensor or safety circuit may comprise a light sensor **334**, which detects the increase smoke density within the microwave's cooking area which is alternatively referred to as a cavity. The light sensor **334** may also include a sensor emitter and sensor receiver. The light sensor **334** may be provided in the microwave cavity **332** and may operate as follows. At the beginning of a cooking cycle, the light generated travels through the clean air to the light sensor **334**. As smoke increases in density, the amount of light that reaches the sensor receiver is reduced. The circuitry of light sensor **334** includes a programmed trip point or threshold that corresponds to the reduced amount of light sensed caused by the amount of smoke, that is indicative of a dangerous condition. When the trip point is reached, the safety circuit causes the electrical power to the radiation emitting cooking element to be withdrawn. A circuit determination would be made based on the amount of smoke that corresponds to the trip point and its corresponding light sensor reading.

Referring to FIG. **26**, in another exemplary embodiment, the safety sensor may include an optical motion sensor **336**. The optical motion sensor **336** may also include a sensor emitter and sensor receiver. The optical motion sensor **336** may be positioned in the microwave cavity **332** adjacent air exhaust vents **338**, **340** of the microwave, which comprises an air passage that connects an area where food is cooked in the microwave oven to the air outside the housing of the microwave oven. The optical motion sensor **336** detects motion which is sensed due to the presence of smoke blown by an exhaust fan **342** of the microwave oven **2** through the air passage. The exhaust fan **342** is operative to cause air to move in the air passage connected to the microwave cavity. In an exemplary arrangement, the sensor emitter and sensor receiver are positioned to be operative to sense the transmission of radiation between the emitter and the receiver in the air passage. The optical motion sensor **336** has a trip point or threshold that corresponds to the presence of smoke of a predetermined density that corresponds to a reduced level of transmission that is indicative of a dangerous condition. When the trip point is reached, the optical motion sensor causes the cooking element of the microwave oven to be turned off. It should be noted that the exemplary optical motion sensor is not be positioned within the microwave cavity and directed toward a turntable therein, since the turntable itself may result in false alarms in some configurations. Of course it should be understood that other types of smoke sensors may be positioned in air passages in other alternative embodiments.

Alternative embodiments may include other types of smoke sensors. For example, some embodiments may include sensors that are operative to detect smoke by determining the level of volatile organic compounds (VOCs) in the air in the microwave oven cooking area. In some exemplary embodiments such VOC sensors may be positioned to sense air in at least a portion of the microwave cooking area. In some cases such VOC sensors may be positioned in an air passage that extends between the microwave cooking area and the air in the atmosphere outside the microwave. Such an arrangement may have an advantage in that positioning the sensor in the air passage may minimize the amount of cooking splatter and other contamination from the food cooked in the microwave oven that reaches the sensor.

Some exemplary arrangements may include a VOC sensor that comprises a tin dioxide semiconductor gas sensor. In some arrangements the semiconductor is formed on an alumina substrate with a thick film heater of ruthenium oxide on the reverse side. Of course this configuration is exemplary and in other embodiments other arrangements and VOC sensor types may be used.

In exemplary microwave oven arrangements VOC sensors may be operated in conjunction with suitable control circuitry to detect conditions which correspond to a dangerous smoke condition. Such a dangerous smoke condition is determined responsive to the level of VOCs, such as carbon

dioxide and/or carbon monoxide in the air in the cooking area of the microwave oven. Such compounds may generally indicate the presence of combustion which is corresponds to a potentially dangerous condition. Responsive to detecting a threshold VOC concentration in the air of the cooking area, the control circuitry in operative connection with the sensor is operative to cause power to be withdrawn from the magnetron of the microwave oven so as to prematurely end a current cooking session before the set and time thereof. In exemplary arrangements, the sensitivity of the VOC sensors is sufficient to detect a developing potentially dangerous condition and cause power to be withdrawn from the microwave cooking element before a fire or other condition causes damage to the microwave oven. This enables the sensor circuitry to reset when the dangerous smoke condition is no longer detected and enable the microwave oven to operate in a subsequent cooking session.

In some exemplary arrangements multiple sensors in operative connection with detection circuitry is utilized to determine the activation point for an alarm condition based on detection of parameters such as humidity, temperature, temperature rate of change, and gas constituents generated during cooking phases. Combinations of absolute and relative values and rates of change thereof may be detected for purposes of evaluating possible alarm conditions. Other types of sensors that may be used in exemplary embodiments include flame sensors. Flame sensors are operative, detect and provide signals indicative of the presence of a flame or fire. Upon the flame sensor detecting the presence of a flame, the flame sensor causes the controller to discontinue electrical power to the microwave oven cooking element. In some arrangements the flame sensor may take the form of an optical flame sensor. The flame sensor may be of the type that utilizes ionization current flame detection. Alternatively, the flame sensor may be of the type that utilizes thermocouple flame detection.

Alternatively or in addition, the fault indicator **230** may be coupled to the controller **104** or other circuitry to indicate that there is a dangerous condition upon detection of a potentially dangerous condition by any of the infrared sensor **326**, light sensor **334**, optical motion sensor **336**, or flame or fire sensor in the embodiments described above. For example, the fault indicator **230** may be a buzzer that is activated in response to the safety sensor **226** sensing polluted air indicative of a dangerous condition. In another example, fault indicator **230** may include the display **124** displaying a fault message such as "E-1" in response to the safety sensor **226** detecting polluted air indicative of a dangerous condition.

Exemplary embodiments may include a combination of fault indicators. For example, upon the trip point or threshold value being reached by any of the detection circuitry of the infrared sensor **326**, light sensor **334**, or optical motion sensor **336**, a shutdown signal is outputted by the sensor **226** to the controller circuitry **104**. Upon receiving the shutdown signal, the controller **104** determines that the microwave oven **2** should be shut down and causes electricity to be withdrawn from the cooking element. In addition, a buzzer is activated and the display **124** displays a fault message such as "E-1" in response to the sensor **226** sensing polluted air indicative of a dangerous condition. In other exemplary embodiments, the controller or other circuitry may be operative to output signals that can be communicated to a remote location, indicative of an alarm condition that is detected through one or more detection circuits of the microwave oven or other connected devices. This may include, for example, the circuitry dispatching messages to a remote device such as a smart phone of a user. The messages caused to be dispatched responsive to operation of the control circuitry may be indicative of an alarm condition that can be output on the display of the user's device to advise that a potentially dangerous condition exists. Alternatively and/or in addition, the control circuitry may be operative to communicate messages to a central controller or alarm panel located in the facility or institution in which the microwave is operated. For example the circuitry may be operative to provide wireless communication to an alarm panel or central monitoring station which receives the information that there is a potentially dangerous condition at the microwave device located in a particular location, dormitory room or other identified area of the building or facility. In still other exemplary arrangements, messages corresponding to alarm conditions that are cause to be sent by the control circuitry of exemplary arrangements may be dispatched to devices or alarm monitoring stations of a security force for an oversight authority within the area in which the microwave is operated. Of course it should be understood that these approaches are exemplary and in other embodiments, other approaches may be used.

The exemplary detection circuitry of the smoke sensor, infrared sensor **326**, light sensor **334**, or optical motion sensor **336**, may be reset automatically upon the sensor not detecting gas or other conditions that are no longer indicative of the dangerous condition. Alternatively or in addition, the sensor may be reset upon circuitry sensing opening of the microwave door **9** of the microwave oven **2**. The display may display a "bar" or other suitable icon to indicate that the sensor is turned on. Other types of suitable safety sensors and circuitry may also be used to detect dangerous conditions. Further in other exemplary embodiments, other circuitry may be in operative connection with the combined appliance or separate components so as to address dangerous conditions. Such items may include, for example, a suitable fire extinguishing system that may be automatically triggered in response to detecting conditions corresponding to fire or smoke within the cooking chamber of the microwave oven. For example in some exemplary arrangements, a compressed supply of carbon dioxide may be included with or be positioned adjacent to the combined appliance. A suitable gas conduit and control valve may be positioned to deliver the carbon dioxide into the cooking chamber of the microwave oven responsive to the detection of flame, excessive temperature or smoke within the microwave cooking chamber. Suitable circuitry in operative connection with the controller or circuitry of the temperature, smoke or flame detection devices may operate to cause the control valve for the delivery of the carbon dioxide or other fire extinguishing material to be opened to cause the delivery thereof responsive to the detection of one or more of the alarm conditions. Further as can be appreciated, in some exemplary arrangements, the control circuitry may operate in accordance with its programmed instructions to require that the alarm condition be detected as existing for a programmed period of time before the control circuitry operates to cause the fire extinguishing material to be delivered into the cooking chamber. Further although exemplary arrangements may include carbon dioxide as the fire extinguishing material, in other embodiments other types of fire extinguishing or fire suppressing materials may be utilized. These may include, for example, chemical fire extinguishing or retarding materials in the form of powders or foams. Alternatively, and/or in addition, fire suppressing materials may include the

delivery of nonflammable gaseous material. Of course these approaches are exemplary and in other embodiments, other approaches may be used.

As shown in FIGS. **15**, **16** and **27**, the exemplary front control panel **22** of the microwave oven **2** may include Universal Serial Bus (USB) ports **232**, **234** for connection, communication, and power supply between the front control panel **22** and electronic devices such as a personal computer, cell phone, Smart Phone, Ipod®, Ipad®, or other suitable device to allow communication and/or charging of the electronic device plugged into the USB ports. In one exemplary embodiment, a first USB port **232** may be provided on the upper portion **236** of the front control panel **22**, and a second USB port **234** may be provided on the lower portion **238** of the front control panel **22** above the auxiliary outlets **111**, **112** and between the reset buttons **113**, **114** as seen in FIG. **15**. The first USB port **232** may be operatively connected to a three ampere fuse and a linear time-variant system (LVT) of 100 mA, 120 volts, and 12 watts. The second USB port **234** may be operatively connected to a linear time-variant system (LVT) of 200 mA, 120 volts, and 24 watts. The second USB port **234** may also be reset. The current sensor **118** may be constructed to limit the second USB port and the two auxiliary outlets to 12 amps. The USB ports **232**, **234** may be in operative connection with respective printed circuit boards. Alternatively, as represented in FIG. **27**, instead of auxiliary outlet **111**, another USB port **237** may be provided on the front panel **22** at the location of the auxiliary outlet **111**. Alternatively or in addition, one or more USB ports may be provided on the rear of the microwave oven, the sides of the microwave oven, and/or the top or bottom of the microwave oven. Alternatively or in addition, one or more auxiliary outlets may be provided on the rear of the microwave oven, the sides of the microwave oven, and/or the top or bottom of the microwave oven. Alternatively, the refrigerator outlet may be provided on the top, bottom, or one of the sides of the microwave oven.

FIGS. **17** and **18** show another exemplary arrangement of a control panel and control circuitry that includes USB ports **232**, **234**. In this arrangement, the first and second USB ports **232**, **234** are located side by side on the lower portion **238** of the front control panel **22** above the auxiliary outlets **111**, **112**. The USB ports **232**, **234** are also located rightwardly (as viewed in FIG. **17**) adjacent a status LED indicator and reset button **240**. In this exemplary arrangement, current sensor **218** is configured to monitor the combined current in the USB ports **232**, **234** and the auxiliary outlets **111** and **112**. The current sensor **218** is constructed to limit the combined current in the USB ports and auxiliary outlets **111** and **112**, to 12 amperes. The LED indicator and reset button **240** may be controlled to illuminate when power to the auxiliary outlets **111**, **112** and the USB ports **232**, **234** is available and flash when disabled. In another embodiment, the LED indicator and reset button **240** may be controlled to be off when power to the auxiliary outlets **111**, **112** and the USB ports **232**, **234** is available and light on illuminate or flash when disabled. In an exemplary arrangement, depressing the LED indicator and reset button **240** enables power delivery from the auxiliary outlets **111**, **112** and the USB ports **232**, **234** so that power may be again supplied from them after a power interruption due to excessive power draw, when the combined current draw falls from above to below the limit. Of course it should also be understood that in exemplary arrangements, the controller or other control circuitry that operates to avoid excessive power draw may also operate to discontinue delivery of power from the receptacles and the USB ports in circumstances where the power draw of the microwave cooking element and/or the refrigerator compressor requires the power delivery from the auxiliary outlets and USB ports be discontinued. In such exemplary arrangements, the control circuitry may operate to automatically resume the delivery of power to such receptacles and ports or in other embodiments, or a manual input may be required to cause the delivery of power to be reinstituted. Of course it should be understood that these approaches are exemplary and in other embodiments other approaches may be used.

FIGS. **19** and **20** show an alternative arrangement in which one USB port **234** is located above the auxiliary outlets **111**, **112** and rightwardly adjacent the status LED indicator and reset button **240**. In this exemplary arrangement, the current sensor **218** is configured to monitor the combined current draw from the USB port **234** and auxiliary outlets **111** and **112**. The current sensor **218** is configured to limit the combined current draw from the USB port **234** and auxiliary outlets **111** and **112**, to 12 amperes. Alternatively, the current sensor **218** may be configured to limit the combined current in the USB port **234** and the auxiliary outlets **111** and **112** to 13 amperes. The LED indicator and reset button **240** may be controlled to illuminate when power to the auxiliary outlets **111**, **112** and the USB port **234** is available, and flash when the control circuitry causes the outlets and ports to be disabled. In another exemplary embodiment, the LED indicator and reset button **240** may be off when power to the auxiliary outlets **111**, **112** and the USB port **234** is available, and illuminate or flash when disabled. In an exemplary arrangement, depressing the LED indicator and reset button **240** enables operation of the auxiliary outlets **111**, **112** and the USB port **234** so that power may be again supplied from them after the controller discontinues the supply of power thereto when the combined current draw falls from above to below the limit. Of course as is the case with the previously described embodiment, the controller and other circuitry may be operative to also discontinue the supply of electrical power to the auxiliary receptacles and/or USB ports when power draw is required for the magnetron of the microwave or the refrigerator compressor is sensed that power delivery to other devices needs to be discontinued to limit excessive power draw. In such circumstances, the discontinuance of power to the auxiliary receptacles and USB ports may be automatically reinstated responsive to operation of the controller. Alternatively, in other arrangements, manual inputs may be required from a user to reinstitute the electrical delivery therefrom. Further in some exemplary arrangements, the controller may be configured so as to require manual inputs to reinstate electrical delivery only under circumstances where excessive power draw above the limits from the one or more auxiliary outlets or USB ports has occurred, thus requiring a manual input to reinstitute the electrical power delivery therefrom. Of course these approaches are exemplary and in other embodiments other approaches may be used. Other elements of the embodiments of FIGS. **17-20** may be similar in structure and function as the embodiments shown in FIGS. **1-11**. Thus, the same reference numbers are used in describing these exemplary embodiments to indicate elements that are similar to elements or components in the embodiments shown in FIGS. **1-11**.

FIG. **21** shows the rear portion **244** of the exemplary microwave oven of the embodiments shown in FIGS. **12-20**. Refrigerator outlet **15** is shown on and accessible from the rear portion **244** of the microwave oven and is associated with the LED indicator and reset button **214**, which is also provided on the rear portion **244** of the microwave oven.

FIG. **22** is a similar view as FIG. **21** except that an AC electrical cord **8** for the microwave oven is shown.

In the embodiments shown in FIGS. **12-22**, control models for control logic may be established for execution of executable instructions by the controller or microprocessor which is also referred to herein as at least one control circuit **4**. These models can be in the form of processor executable instructions stored in a computer readable medium, such as software or firmware within the control circuit **104**. The exemplary models and logic flow are, in the first instance, dependent on the state of operation of the microwave oven **2**. The current demands of the microwave oven **2** are generally the most significant contribution to overload. To avoid overload conditions, in exemplary arrangements power to the low power receptacles or auxiliary outlets, refrigerator receptacle, and/or USB ports is disabled during microwave operation.

FIG. **23** shows a flow chart illustrating several control models for operational scenarios. The control circuit **104** begins by determining whether the microwave oven is turned on or operating (e.g. cooking) in step **246**. When the microwave oven is turned on and operating to perform cooking, the rear refrigerator outlet **15**, the two auxiliary outlets **111**, **112** on the front control panel **22**, and the two USB ports **232**, **234** on the front control panel are all turned off or disabled, so that the total draw of current for the combination microwave and refrigerator is not over 15 amperes as indicated in step **248**.

When the microwave oven is not drawing cooking power and items are plugged into the two USB ports **232**, **234**, two auxiliary outlets **111**, **112**, and rear refrigerator outlet **15**, then the exemplary control circuit **104** determines whether the refrigerator outlet **15** is drawing less than 2 amperes (approximately the average amperes when the refrigerator compressor is running) in step **250**. If the refrigerator outlet **15** is drawing less than 2 amperes, then all the outlets **15**, **111**, **112** and USB ports **232**, **234** are caused to be enabled, so that power may be supplied through them as indicated in step **252**. If the refrigerator outlet **15** not drawing less than 2 amperes, the control circuit **104** determines whether the refrigerator outlet **15** is drawing less than 14 amperes in step **254**. If the refrigerator outlet **15** is drawing less than 14 amperes but not less than or greater than or equal to 2 amperes, then the auxiliary outlets **111**, **112** and USB ports **232**, **234** are disabled or turned off so that no power may be supplied from them as indicated in step **256**. The refrigerator outlet **15** remains enabled. If the refrigerator outlet **15** is not drawing less than 14 amperes or drawing greater than or equal to 14 amperes, then the refrigerator outlet **15** is disabled in step **258**. This may be accomplished by tripping the relay **20** of the reset circuit off. In addition, the red LED light on the LED indicator and reset button **214** is turned on to identify the disabled condition of the refrigerator. Then, in step **260**, the auxiliary outlets **111**, **112** and USB ports **232**, **234** are enabled so that power may be supplied through them.

Then, the exemplary control circuit determines whether the refrigerator outlet **15** is drawing less than 14 amperes in step **262**. If the refrigerator outlet **15** is not drawing less than 14 amperes or drawing greater than or equal to 14 amperes, then the refrigerator outlet **15** remains disabled and the red LED light on the LED indicator and reset button **214** remains turned on to identify the disabled condition of the refrigerator **3**. This condition may occur, for example, if an electrical heater is plugged into what is normally used as the refrigerator electrical supply outlet **15**. When the refrigerator outlet **15** draws less than 14 amperes resulting from the overload condition being eliminated, the refrigerator outlet **15** will be enabled by the control circuit so that power may supplied to the refrigerator outlet **15** upon the LED indicator and reset button **214** being depressed as indicated in step **264**. Depression of the LED indicator and reset button **214** in this condition will also turn off the red LED light. The process then ends. It should be noted that the at least one control circuit **104** can make the determination in steps at the same time or in a different order.

It should be understood that in exemplary embodiments, determination as to the power draw from receptacles that have been disabled, may be determined through a process of again supplying power output through the receptacle. The power draw from the receptacle is monitored continuously after the power is restored and if it is detected that the power draw exceeds a threshold or other determined amount, power is discontinued to the receptacle. In some exemplary arrangements, the power sensing circuitry may operate in conjunction with the controller to calculate the current power draw level. The control circuitry may also operate in accordance with its programming to determine that other connected devices are consuming power which may necessitate not providing power to the receptacle so as to avoid an overload condition. Alternatively or in addition, the control circuitry may be operative to monitor other conditions that may be indicative of a problem when the power is restored to a receptacle, port or other control outlet. For example, responsive to a manual input to reinstitute the supply of power thereto, the control circuitry may operate to recognize conditions that correspond to an electrical short or other malfunction which necessitates an immediate withdrawal of electrical power thereto. This may include, for example, monitoring the rate at which power is drawn and the current flow increases to detect a short or other fault condition. Numerous different types of detection circuitry and control approaches may be implemented in order to help assure that if power output has been discontinued, that excessive power draw or undesirable conditions are not a problem when power is reinstated.

Although exemplary embodiments are described herein as used in conjunction with vapor compression refrigerators, embodiments employing the principles described herein may also be used with other types of refrigerators. Such refrigerators may include refrigerators that use thermoelectric cooling, such as Peltier elements to provide cooling. Other embodiments may include absorption refrigerators to provide cooling. In such embodiments the components of the refrigerator apparatus which draw electrical power, are controlled through operation of at least one control circuit, to prevent, suspend or defer the operation thereof at times when the microwave radiation emitting cooking element of other components that draw electrical power are to be operated, so as to avoid exceeding a maximum threshold for current draw for the combined appliance that is permitted by the at least one control circuit.

It should be understood that the above description is only illustrative of the exemplary embodiments. Various alternatives and modifications can be devised by those skilled in the art without departing from the teachings of exemplary embodiments. Accordingly, the present application is intended to embrace all such alternatives, modifications and variances which fall with the scope of the appended claims.

Thus the exemplary systems, arrangements, and methods of operation that have been described herein achieve desirable capabilities, eliminate difficulties encountered in the use of prior devices and systems and attain the useful results described herein.

In the foregoing description, certain terms have been used in describing exemplary embodiments for purposes of brevity, clarity and understanding. However, no unnecessary limitations are to be implied therefrom because such terms are used for descriptive purposes and are intended to be broadly construed. Moreover, the descriptions and illustrations herein are by way of examples and the inventive features are not limited to the particular features shown and described.

Further it should be understood that elements, features, relationships, devices and other aspects described in connection with one exemplary embodiment may be utilized in connection with other exemplary embodiments such that numerous different arrangements, functions and capabilities may be carried out. Numerous different aspects of described embodiments may be used together or in different combinations to achieve useful results.

Having described the features, discoveries and principles of the exemplary embodiments, the manner in which they are constructed and operated, and the advantages and useful results attained, the new and useful structures, devices, elements, arrangements, parts, combinations, systems, equipment, operations, methods, processes and relationships are set forth in the appended claims.

We claim:

1. Apparatus comprising:

a microwave oven,

wherein the microwave oven includes:

a radiation emitting microwave element,

a microwave housing, wherein the microwave housing bounds a cooking interior area, wherein the radiation emitting microwave element is operative to irradiate the cooking interior area,

wherein an air passage extends between the cooking interior area and an exterior of the housing,

at least one power control circuit, wherein the at least one power control circuit is operative to cause

electrical power to be selectively delivered to the microwave element,

wherein the microwave oven further includes at least one sensor emitter and at least one sensor receiver configured to receive radiation from the at least one sensor emitter, wherein the at least one sensor emitter and the at least one sensor receiver extend in the air passage such that air from at least a portion of the cooking interior area extends intermediate of the at least one sensor emitter and the at least one sensor receiver,

at least one safety circuit, wherein the at least one safety circuit is in operative connection with the at least one sensor emitter, the at least one sensor receiver, and the microwave element,

wherein the at least one safety circuit is operative to cause

the at least one sensor emitter to emit sensor radiation and the at least one sensor receiver to sense sensor radiation from the at least one sensor emitter while the microwave element operates during a current cooking session,

data to be stored in a memory associated with the at least one safety circuit corresponding to an initial transmissivity level of transmitted radiation from the at least one sensor emitter that reaches the at least one sensor receiver early in the current cooking session,

comparison of a current level of transmitted radiation during the current cooking session that reaches the at least one sensor receiver, and the initial transmissivity level,

a determination based on the stored data that the current level of transmitted radiation from the at least one sensor emitter that reaches the at least one sensor receiver has fallen by at least a threshold amount from the initial transmissivity level during the current cooking session, due to smoke in the cooking interior area,

responsive at least in part to the determination, the microwave element to no longer be supplied with electrical power to prematurely end the current cooking session,

wherein the at least one safety circuit is configured to reset after the premature end of the current cooking session responsive to the at least one sensor circuit, so that the at least one sensor circuit is operative to cause the radiation emitting microwave element to be allowed to be supplied with electrical power during a next subsequent cooking session.

2. The apparatus according to claim **1**

wherein the microwave oven housing includes a fan, wherein the fan is operative to cause air from the cooking interior area to move through the air passage.

3. The apparatus according to claim **1** and further including

a power supply outlet, wherein the power supply outlet is provided on the microwave oven,

wherein the power supply outlet is configured to receive an electrical connection to an appliance having lower power requirements than power requirements of the microwave oven,

wherein the at least one power control circuit is operative to cause

electrical power to be selectively delivered to the microwave element and the power supply outlet, wherein the power supply outlet does not operate to supply power therefrom when the microwave element draws cooking power.

4. The apparatus according to claim **1** and further comprising:

a power supply outlet provided on the microwave oven wherein the power supply outlet is in operative connection with the at least one power control circuit,

a refrigerator configured to be connected to the power supply outlet,

wherein the refrigerator includes a refrigerator housing, wherein the refrigerator housing bounds a cooled refrigerator interior area, wherein the refrigerator housing is in a fixed operative connection with the microwave housing, wherein the refrigerator includes a refrigerant compressor, wherein the refrigerant compressor is operative to compress refrigerant material, wherein the refrigerant is operative to cause cooling of the cooled refrigerator interior area,

wherein the at least one power control circuit is configured to:

disable refrigerator operation by not supplying electrical power to the compressor when the microwave element draws cooking power;

enable refrigeration operation by supplying electrical power to the compressor when the microwave element does not draw cooking power.

5. The apparatus according to claim **4**

wherein the microwave oven includes a USB port, wherein the USB port is in operative connection with the at least one power control circuit,

wherein the USB port is not operative when the microwave element draws cooking power.

6. The apparatus according to claim **4**

wherein the microwave oven includes an inductance charging pad, wherein the inductance charging pad is in operative connection with the at least one power control circuit,

wherein the inductance charging pad is not operative when the microwave element draws cooking power.

7. The apparatus according to claim **4** and further including

a wireless interface, wherein the wireless interface is in operative connection with the at least one power control circuit,

wherein the wireless interface is operative to transmit signals indicative of a condition of at least one of the microwave oven and the refrigerator, to a wireless mobile device.

8. The apparatus according to claim **4** and further including

a temperature sensor, wherein the temperature sensor is operative to sense a temperature corresponding to temperature in the cooking interior area,

wherein the temperature sensor is in operative connection with the at least one safety circuit,

wherein the at least one power control circuit is operative to cause the microwave element to no longer be supplied with cooking power to prematurely end the current cooking session responsive at least in part to the determination, and

the temperature being sensed above a temperature level during the current cooking session.

9. Apparatus comprising:

a microwave oven configured to be connected to a source of electrical power and having a control circuit, wherein the control circuit is configured to control operation of the microwave oven;

a smoke sensor, wherein the smoke sensor is positioned in an air passage that extends between a cooking area inside the microwave oven and air outside the microwave oven, wherein the smoke sensor is in operative connection with the control circuit, wherein the smoke sensor is configured to cause cooking power to the microwave oven to be withdrawn prior to a set end time of a current cooking session upon the smoke sensor sensing smoke indicative of a dangerous condition; and

wherein the smoke sensor is configured to be reset after ending the current cooking session prior to the set end time based on sensing the smoke indicative of the dangerous condition, to enable the microwave oven to receive cooking power in a next subsequent cooking session responsive at least in part to the smoke sensor no longer sensing the smoke indicative of the dangerous condition.

10. The apparatus according to claim **9** and further comprising:

a power supply outlet on the microwave oven,

wherein the power supply outlet is in operative connection with the control circuit,

a refrigerator,

wherein the refrigerator is electrically connected with the power supply outlet,

wherein the control circuit is operative to

withdraw electrical power from the refrigerator when the microwave oven draws cooking power,

deliver electrical power to the refrigerator when the microwave oven does not draw cooking power.

11. The apparatus according to claim **10**, wherein the smoke sensor includes at least one of

a photosensor,

a motion sensor,

an ionization sensor,

a VOC sensor,

a sensor including a radiation emitter and a radiation receiver.

12. The apparatus according to claim **10**

wherein the microwave oven includes a USB port, wherein the USB port is in operative connection with the control circuit,

wherein the control circuit causes the USB port not to be operative when the microwave oven draws cooking power.

13. The apparatus according to claim **10**

wherein the microwave oven includes an inductance charging pad,

wherein the inductance charging pad is in operative connection with the control circuit,

wherein the control circuit causes the inductance charging pad not to be operative when the microwave oven draws cooking power.

14. The apparatus according to claim **10**

and further including a wireless interface, wherein the wireless interface is in operative connection with the control circuit,

wherein the wireless interface is operative to transmit signals indicative of a condition of at least one of the microwave oven and the refrigerator to a wireless mobile device.

15. The apparatus according to claim **10** and further including

a temperature sensor, wherein the temperature sensor is operative to sense a temperature corresponding to temperature in the cooking area,

wherein the temperature sensor is in operative connection with the smoke sensor,

wherein the control circuit is operative to cause cooking power to the microwave oven to be withdrawn prior to the set end time of the current cooking session, responsive to the smoke sensor sensing smoke indicative of the dangerous condition and the temperature being sensed above a temperature level during the cooking session.

16. The apparatus according to claim **10**

wherein the smoke sensor includes a sensor emitter and a sensor receiver, wherein the sensor receiver is configured to receive radiation output from the sensor emitter,

a sensor circuit, wherein the sensor circuit is in operative connection with the sensor emitter, the sensor receiver and the control circuit,

wherein the sensor circuit is operative to cause

the sensor emitter to emit radiation and the sensor receiver to sense radiation from the sensor emitter while the microwave oven operates during a current cooking session,

data to be stored in a memory associated with the sensor circuit corresponding to an initial transmissivity level of transmitted radiation from the sensor emitter that reaches the sensor receiver early in the current cooking session,

comparison of a current level of transmitted radiation that reaches the sensor receiver during the current cooking session, and the initial transmissivity level,

a determination based on the stored data, that the current level of transmitted radiation from the sensor emitter that reaches the sensor receiver has fallen by at least a threshold amount from the initial transmissivity level during the current cooking session, wherein the determination corresponds to smoke indicative of the dangerous condition,

wherein cooking power to the microwave oven is withdrawn prior to the set end time of the current cooking session responsive at least in part to the determination.

17. Apparatus comprising:

a microwave oven configured to be connected to a source of electrical power and having a control circuit to control operation of the microwave oven, wherein the microwave oven includes an interior cooking area, wherein the microwave oven includes an air passage that extends between the cooking area and outside the microwave oven,

a smoke sensor, wherein the smoke sensor is positioned in the air passage, wherein the smoke sensor is configured to cause cooking power to be withdrawn from the microwave oven prior to a set end time of a current cooking session responsive at least in part to the smoke sensor sensing at least one change in an amount of smoke sensed by the smoke sensor, which at least one change corresponds to a dangerous condition, and

wherein the control circuit is configured to reset after ending the current cooking session prior to the set end time due to sensing the dangerous condition, to enable cooking power to again be available to the microwave oven in a next subsequent cooking session responsive at least in part to the smoke sensor no longer sensing the dangerous condition.

18. The apparatus according to claim **17** and further comprising:

a power supply outlet on the microwave oven,

a refrigerator configured to be connected to the source of electrical power by connection to the power supply outlet, wherein the refrigerator includes a compressor,

wherein the control circuit is operative to cause

electrical power to be unavailable to the compressor, when the microwave oven demands cooking power,

electrical power to be available to the compressor when the microwave oven does not demand cooking power.

19. The apparatus according to claim **18**, wherein the smoke sensor includes at least one of

a radiation emitter and radiation receiver,

a photosensor,

a motion sensor,

an ionization sensor,

a VOC sensor.

20. The apparatus according claim **18**, wherein the microwave oven further includes at least one output device including at least one of

a USB port,

an inductance charging pad,

an auxiliary electrical outlet,

wherein the at least one output device is in operative connection with the control circuit, and wherein the control circuit is operative to cause the at least one output device to be inoperative when the microwave oven demands cooking power.

* * * * *