US 20140251982A1

(19) United States

(12) Patent Application Publication

Emma

(10) Pub. No.: US 2014/0251982 A1

(43) Pub. Date: Sep. 11, 2014

(54) **MULTIPLE LINKED APPLIANCE WITH AUXILIARY OUTLET**

(71) Applicant: **Intirion Corporation**, Walpole, MA (US)

(72) Inventor: **Phillip Emma**, Topsfield, MA (US)

(73) Assignee: **Intirion Corporation**, Walpole, MA (US)

(21) Appl. No.: **14/262,290**

(22) Filed: **Apr. 25, 2014**

Related U.S. Application Data

(63) Continuation-in-part of application No. 12/317,632, filed on Dec. 23, 2008, now Pat. No. 8,742,304.

(60) Provisional application No. 61/009,419, filed on Dec. 28, 2007.

Publication Classification

(51) **Int. Cl.**

F25B 29/00 (2006.01)

H05B 6/66 (2006.01)

(52) **U.S. Cl.**

CPC ***F25B 29/00*** (2013.01); ***H05B 6/664*** (2013.01)

USPC **219/679**; 219/488

(57) **ABSTRACT**

A combination microwave and refrigerator system is constructed having a single plug input supply. The microwave oven is adapted to provide power to a refrigerator, and to auxiliary receptacles adapted for low power operation. The current to the low power receptacles and the refrigerator is controlled by the controller for the microwave oven according to the duty cycles of the connected appliances to avoid overload conditions.

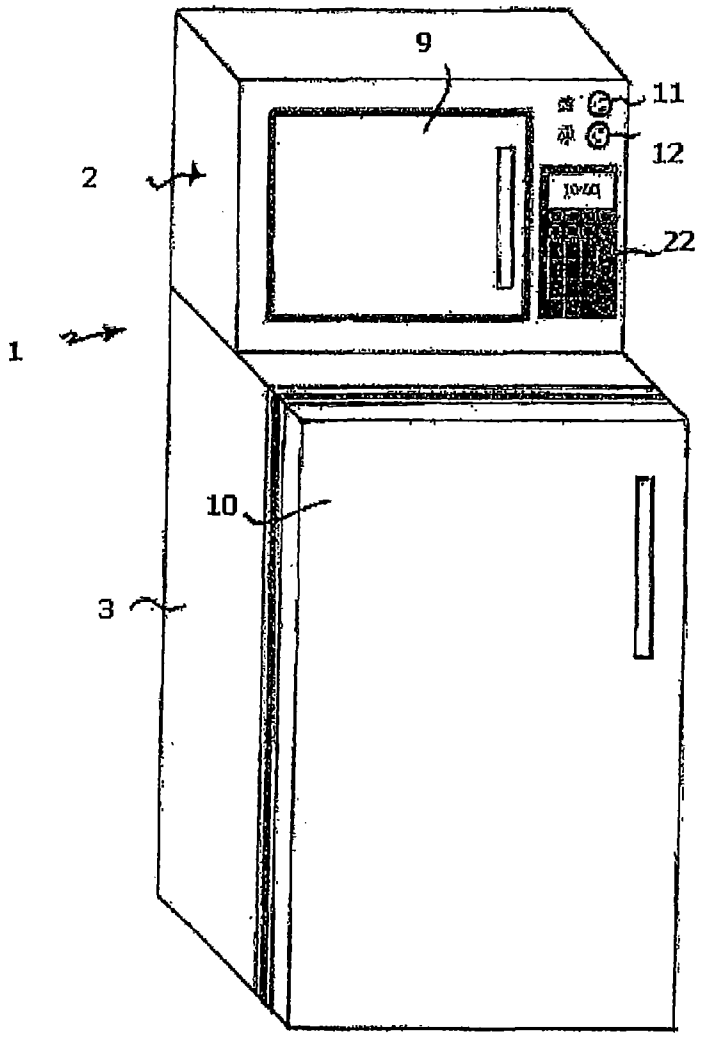

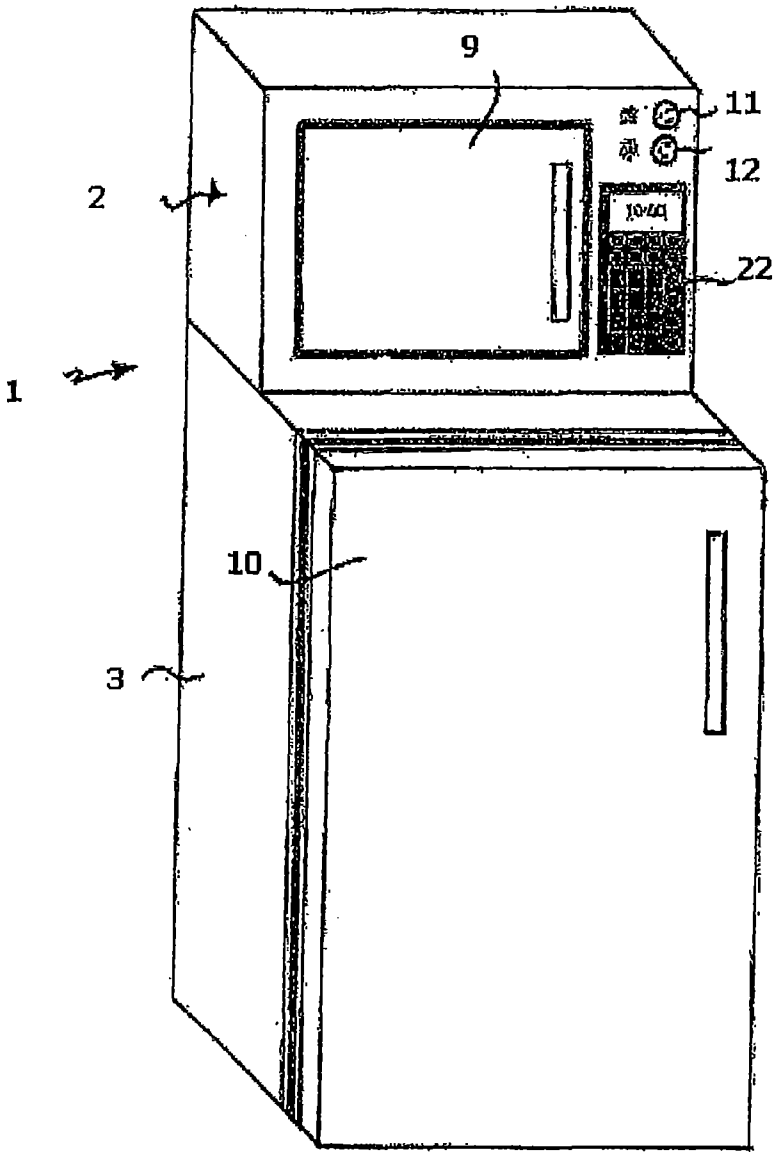

FIGURE 1

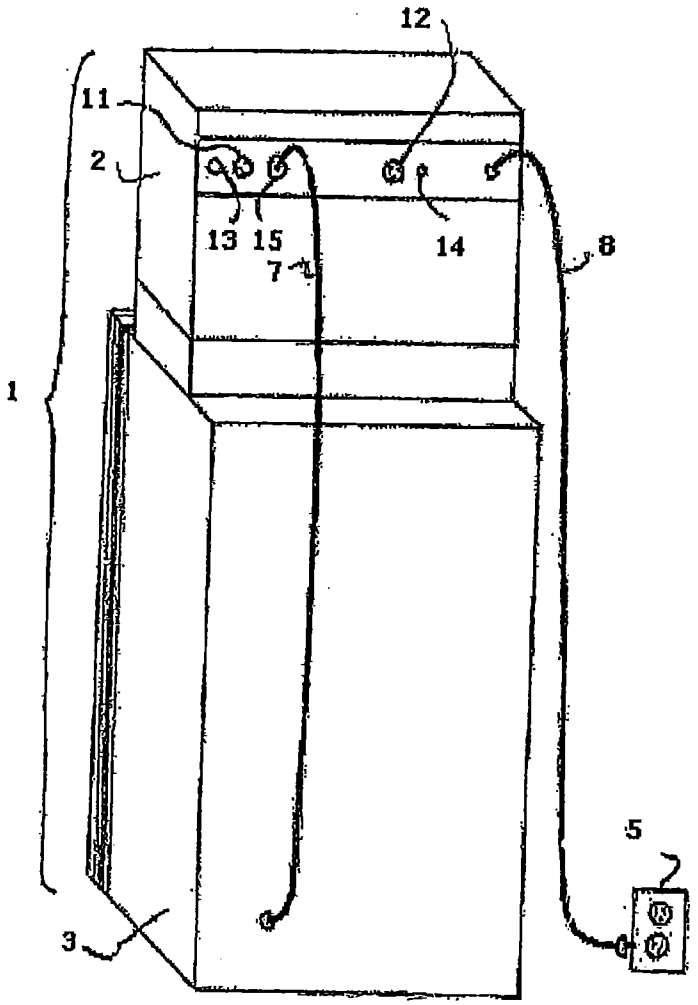

FIGURE 2

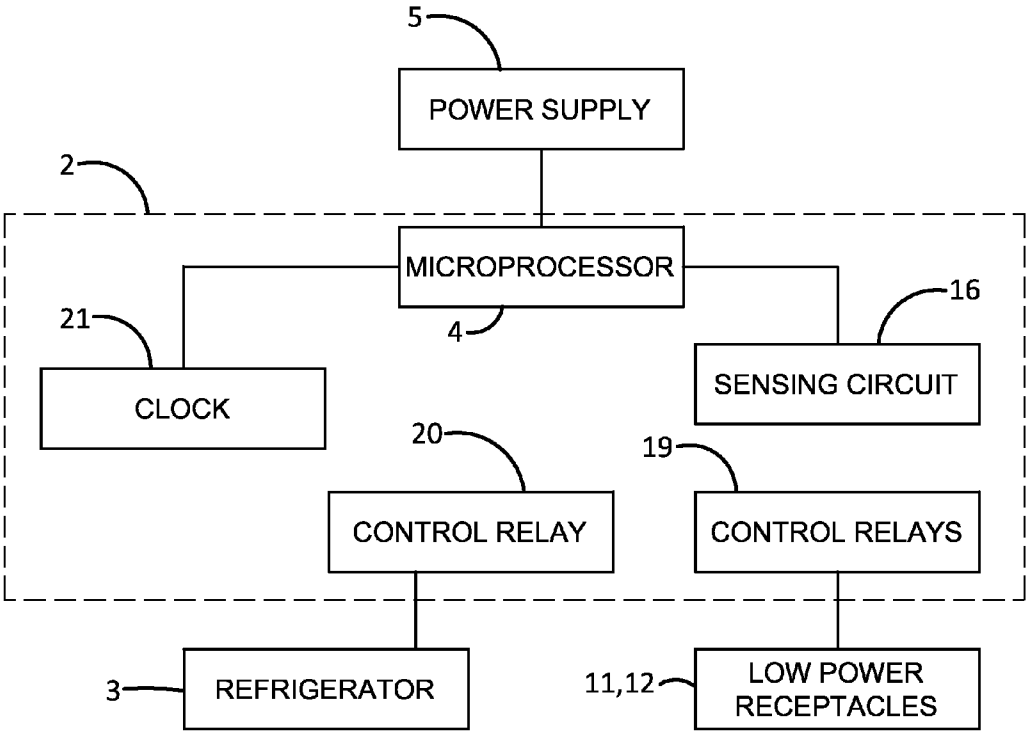
5
POWER SUPPLY
2
MICROPROCESSOR
4
16
21
SENSING CIRCUIT
CLOCK
20
19
CONTROL RELAY
CONTROL RELAYS
3
REFRIGERATOR
11,12
LOW POWER RECEPTACLES

FIGURE 3

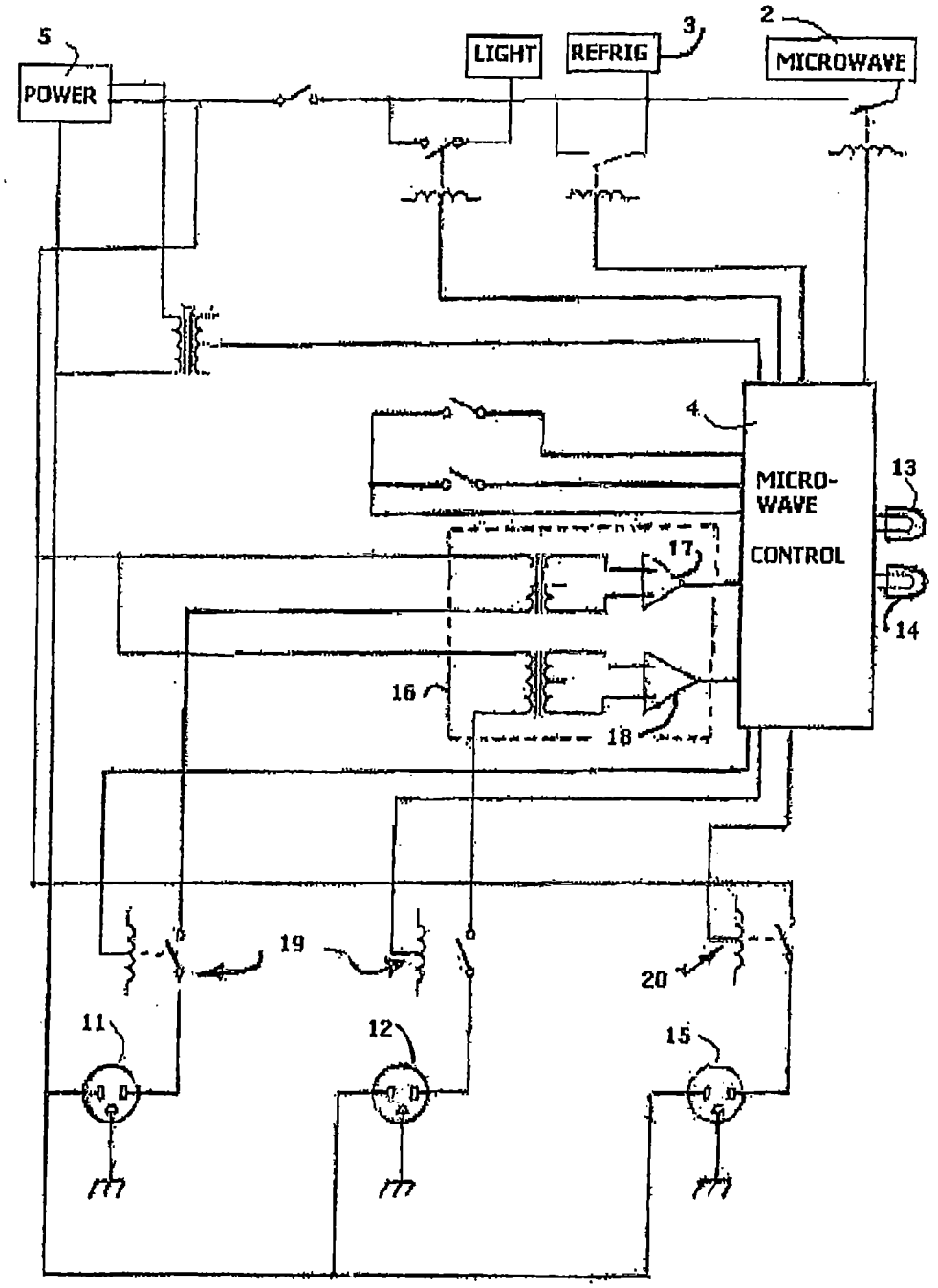
5
POWER
LIGHT
REFRIG
3
2
MICROWAVE
4
MICRO-
WAVE
CONTROL
13
14
17
16
18
19
20
11
12
15

FIGURE 4

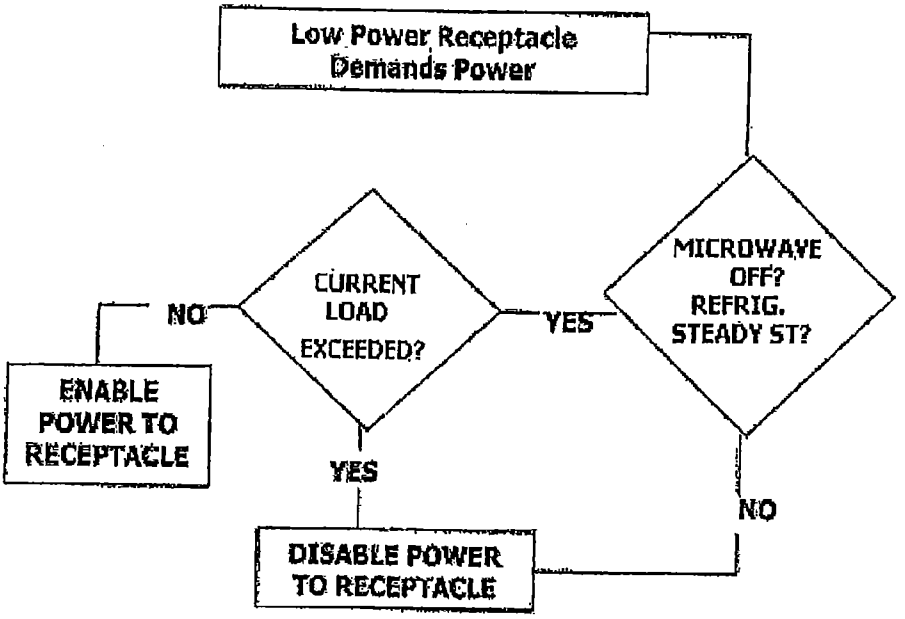

FIGURE 5

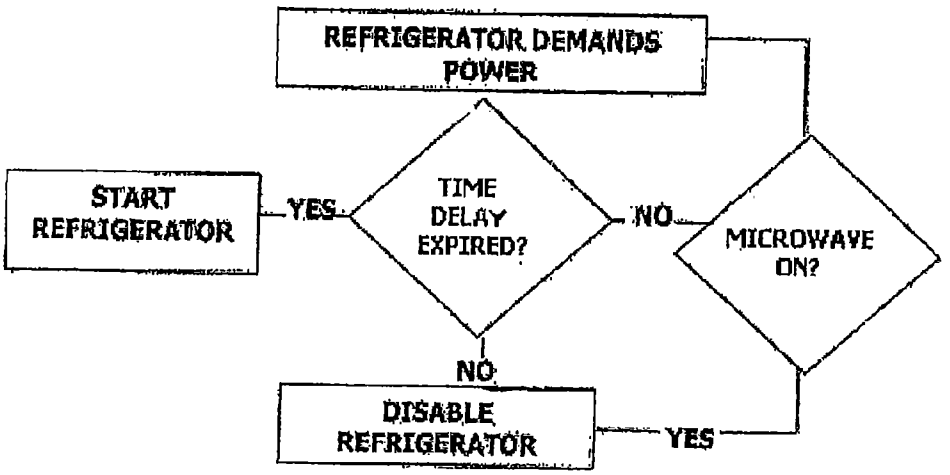

FIGURE 6

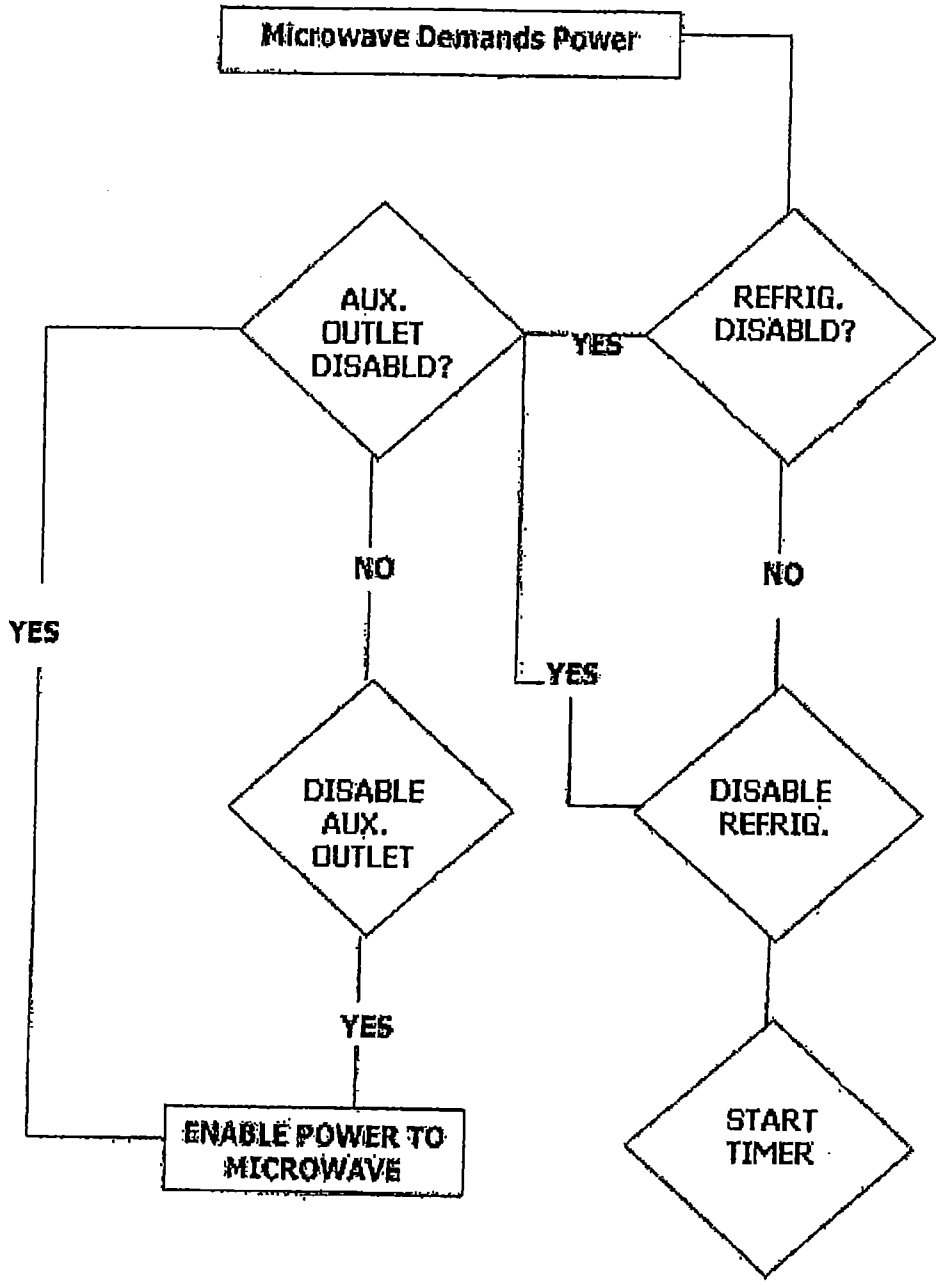
Microwave Demands Power
AUX. OUTLET DISABLD?
YES
REFRIG. DISABLD?
NO
NO
YES
YES
DISABLE AUX. OUTLET
DISABLE REFRIG.
YES
ENABLE POWER TO MICROWAVE
START TIMER

FIGURE 7

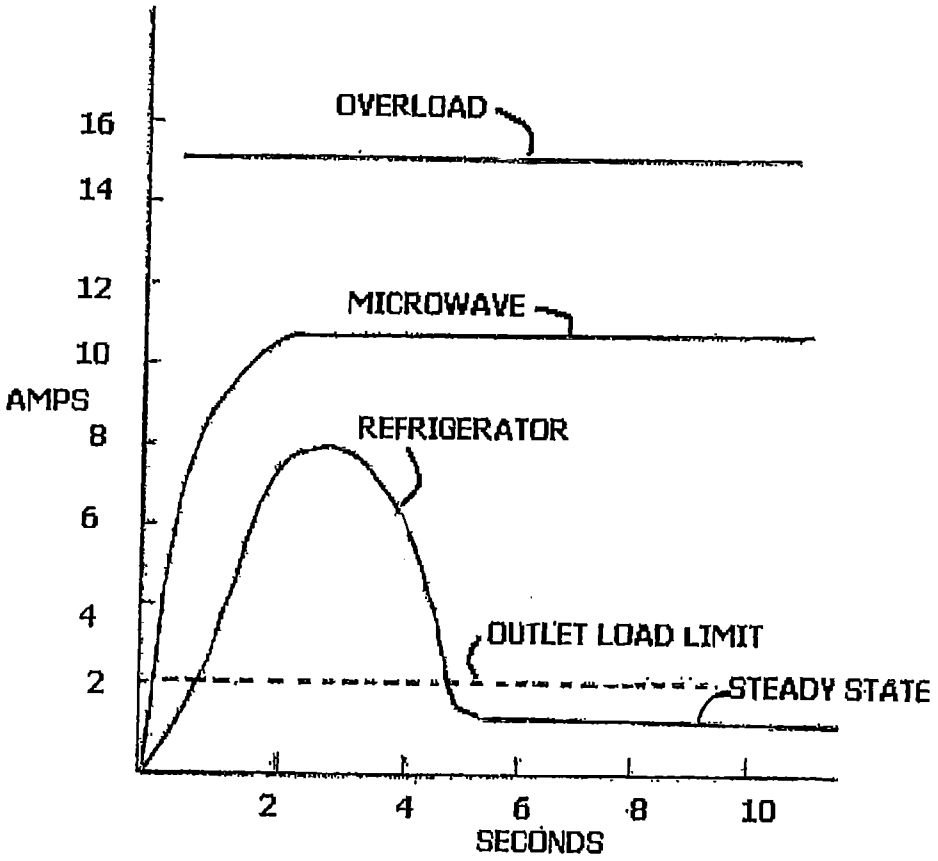
OVERLOAD
MICROWAVE
REFRIGERATOR
OUTLET LOAD LIMIT
STEADY STATE
AMPS
16
14
12
10
8
6
4
2
2
4
6
8
10
SECONDS

FIGURE 8

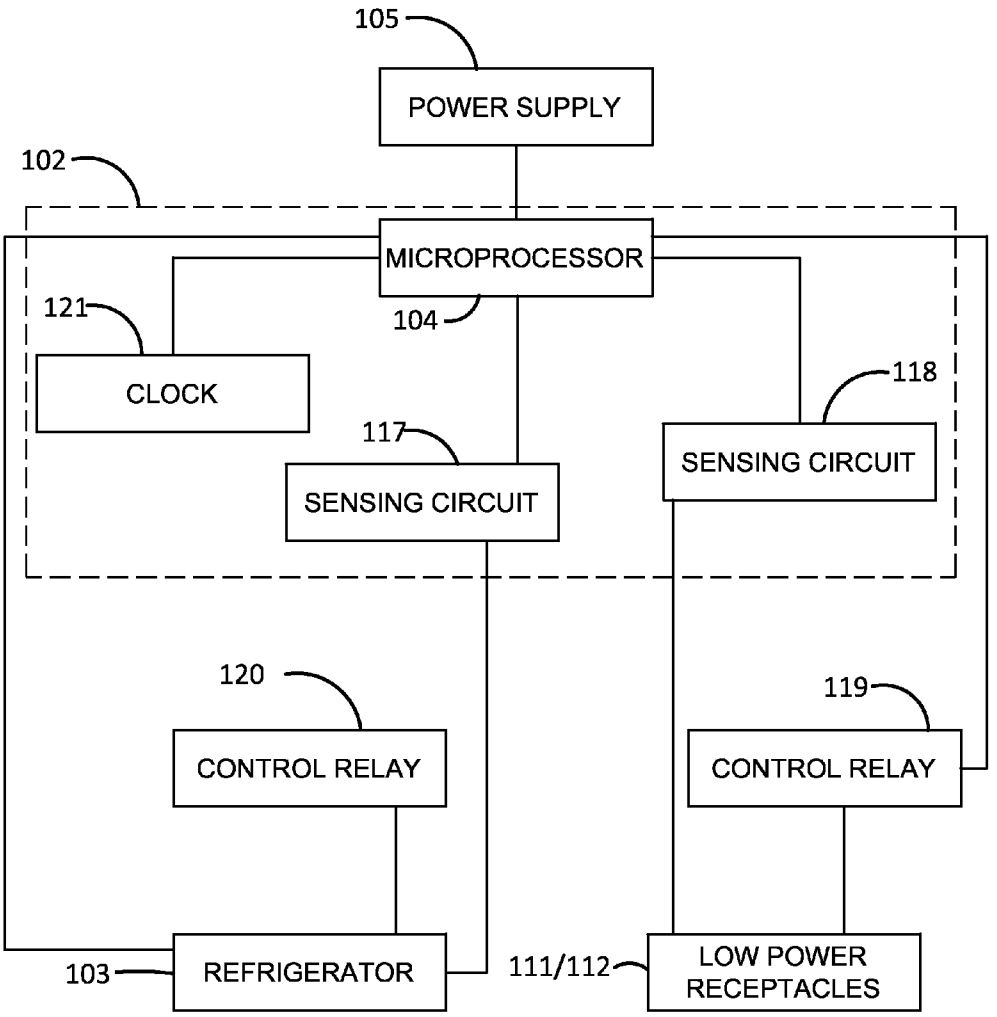
105
POWER SUPPLY
102
MICROPROCESSOR
104
121
CLOCK
118
117
SENSING CIRCUIT
SENSING CIRCUIT
120
119
CONTROL RELAY
CONTROL RELAY
103
REFRIGERATOR
111/112
LOW POWER RECEPTACLES

FIGURE 9

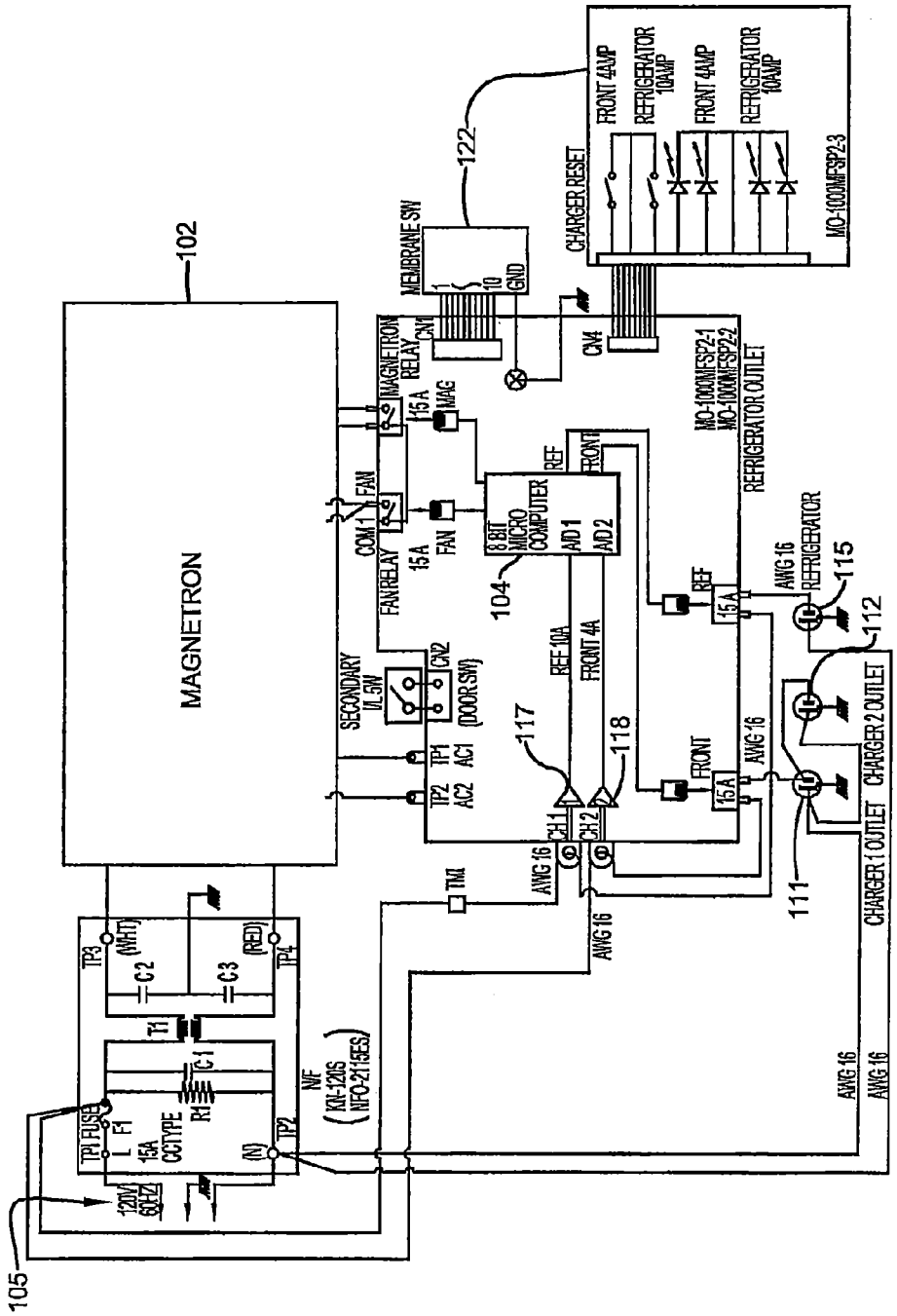
102
MAGNETRON
105
122
MEMBRANE SW
CN1
GND
CHARGER RESET
FRONT 4AMP
REFRIGERATOR 10AMP
MO-1000MFSP2-3
CN4
MAGNETRON RELAY
15A
MAG
FAN
COM1
FAN RELAY
8 BIT MICRO COMPUTER
A/D1
A/D2
REF
FRONT
104
MO-1000MFSP2-1
MO-1000MFSP2-2
REFRIGERATOR OUTLET
REFRIGERATOR
AWG 16
115
112
111
CHARGER 2 OUTLET
CHARGER 1 OUTLET
SECONDARY I/L SW
CN2
(DOOR SW)
TP1
AC1
TP2
AC2
REF 10A
FRONT 4A
117
118
CH1
CH2
TM1
TP3
(WHT)
TP4
(RED)
C2
C3
T1
C1
R1
TP1 FUSE
F1
15A
CCTYPE
(N)
TP2
N/F
(KN-120S
NFO-2115ES)
120V
60HZ

FIG. 10

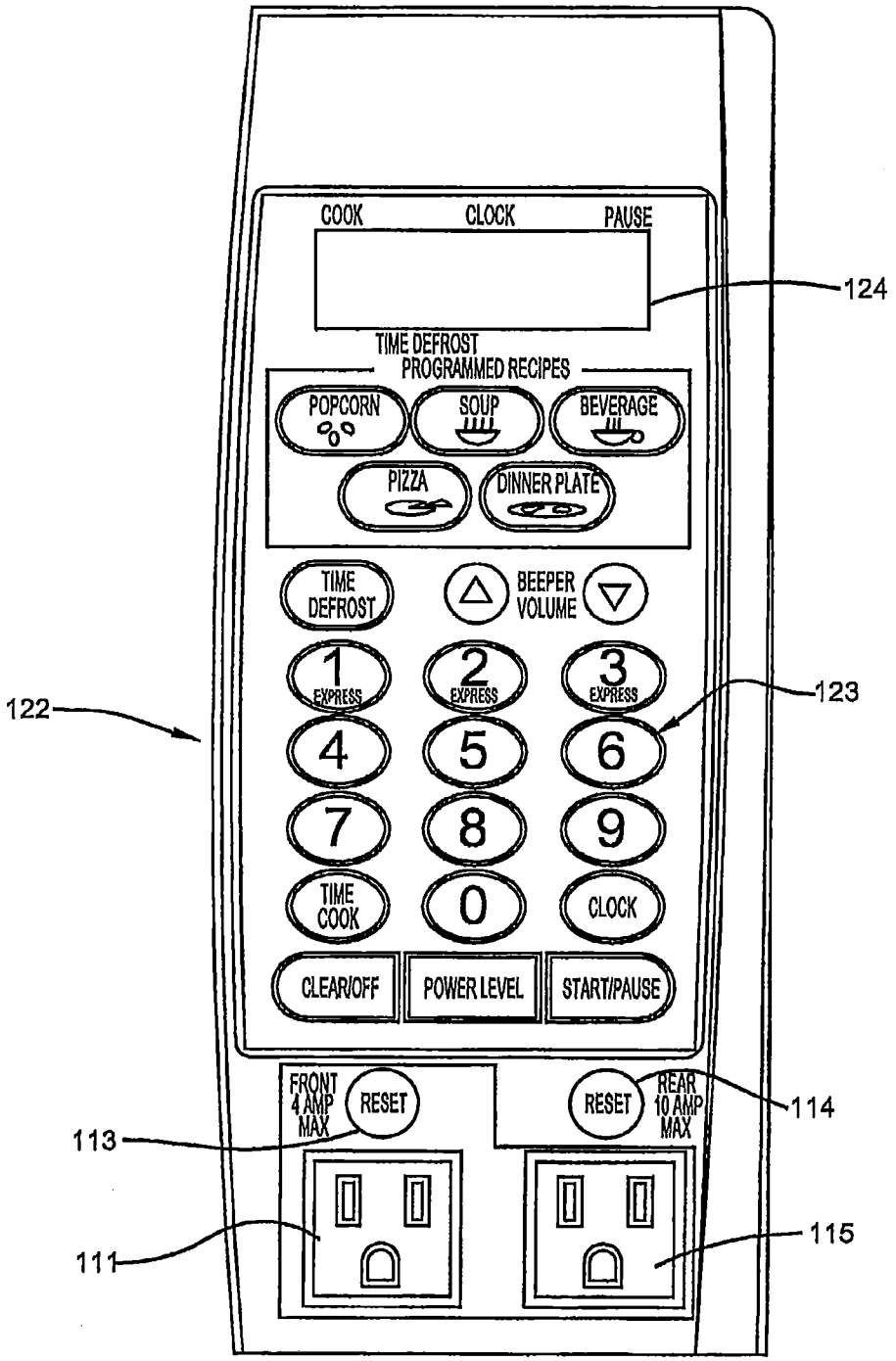
COOK
CLOCK
PAUSE
124
TIME DEFROST
PROGRAMMED RECIPES
POPCORN
SOUP
BEVERAGE
PIZZA
DINNER PLATE
TIME DEFROST
BEEPER VOLUME
1 EXPRESS
2 EXPRESS
3 EXPRESS
122
123
4
5
6
7
8
9
TIME COOK
0
CLOCK
CLEAR/OFF
POWER LEVEL
START/PAUSE
FRONT 4 AMP MAX
RESET
RESET
REAR 10 AMP MAX
114
113
111
115

FIG. 11

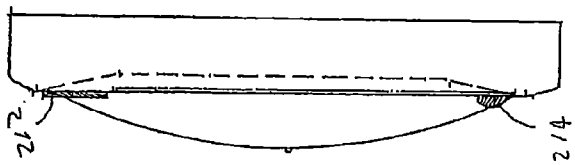

FIG. 13

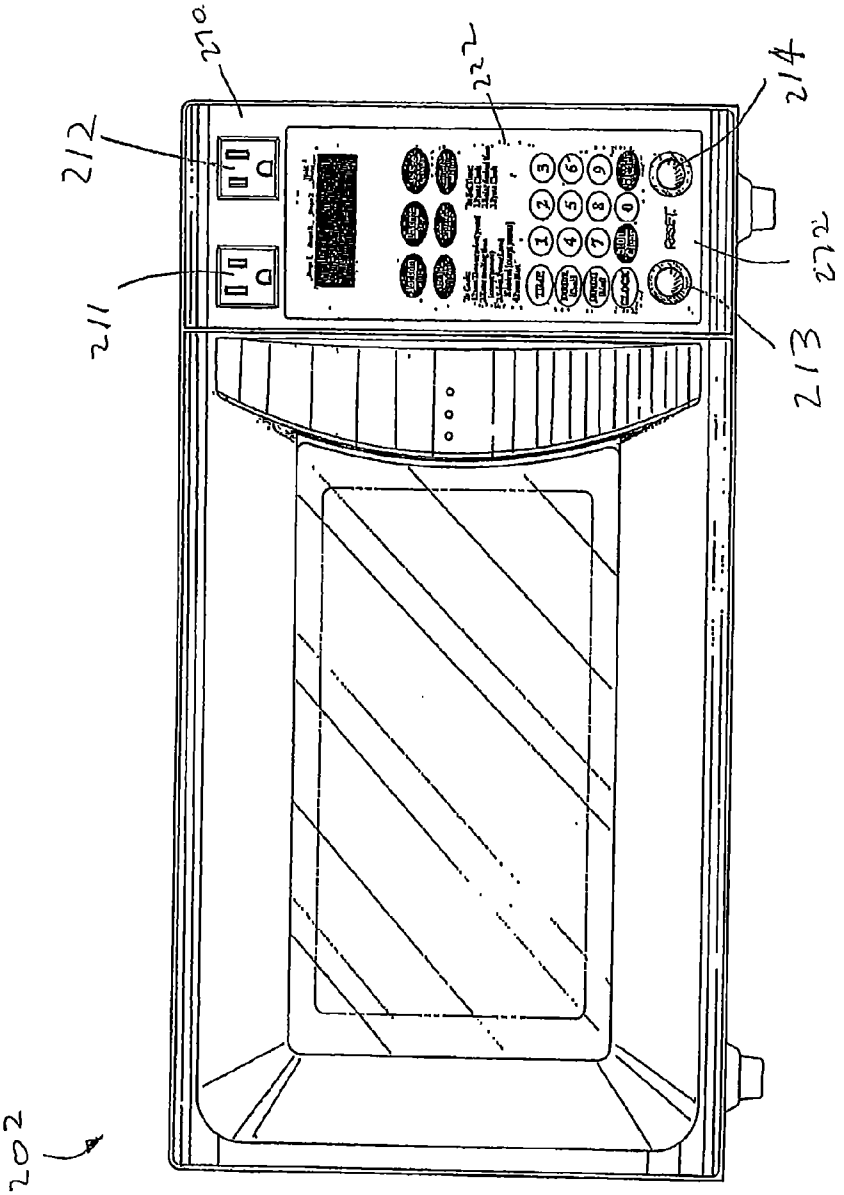

FIG. 12

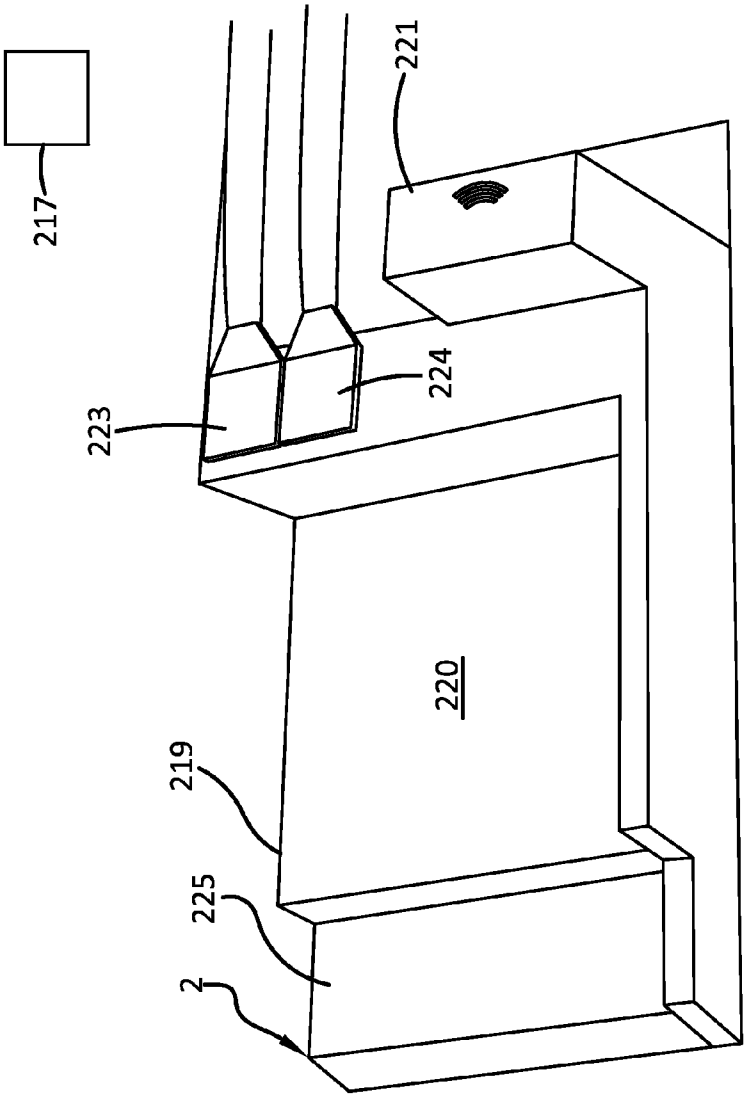

FIGURE 14

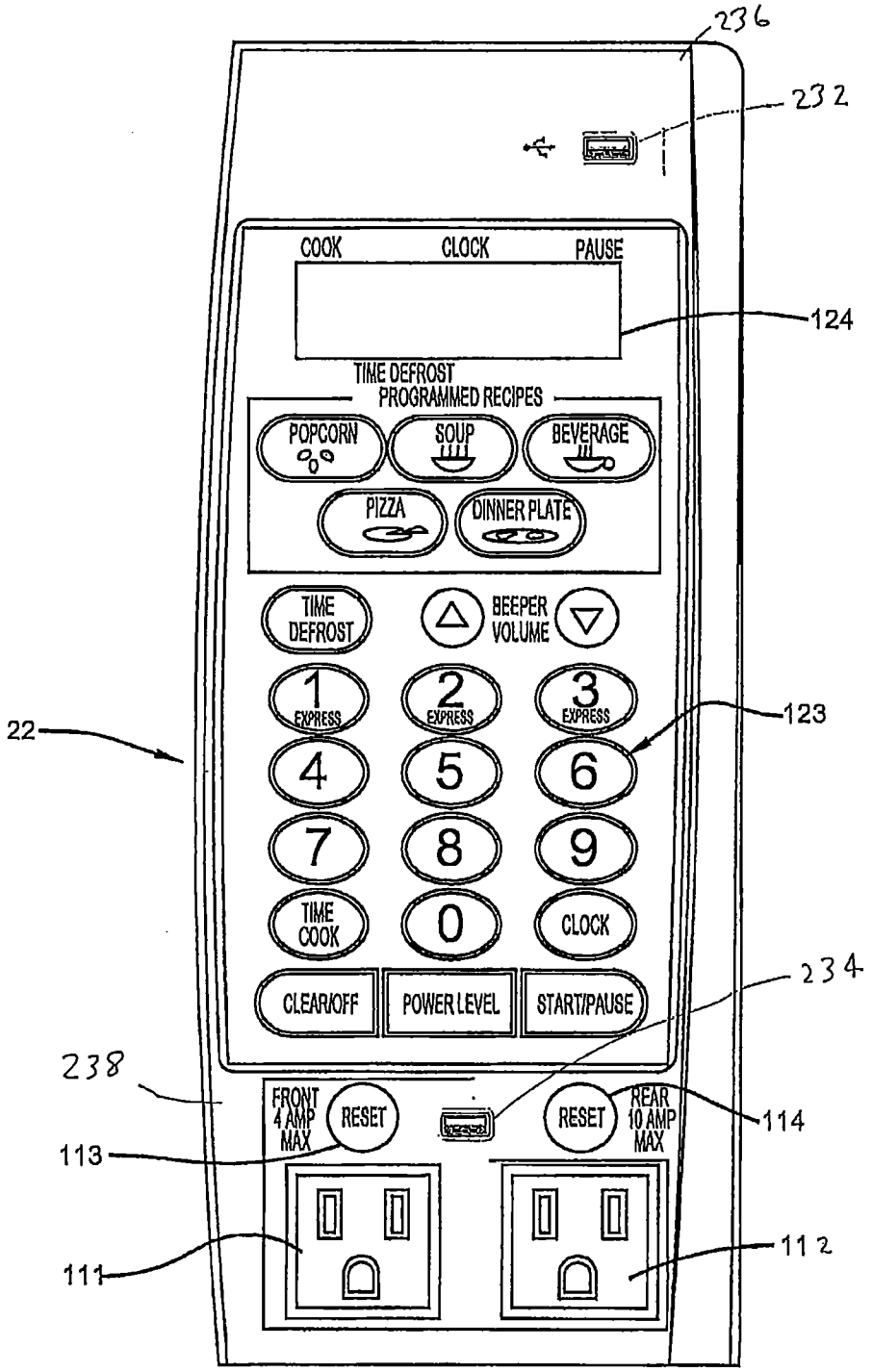
236
232
COOK
CLOCK
PAUSE
124
TIME DEFROST
PROGRAMMED RECIPES
POPCORN
SOUP
BEVERAGE
PIZZA
DINNER PLATE
TIME DEFROST
BEEPER VOLUME
1 EXPRESS
2 EXPRESS
3 EXPRESS
123
22
4
5
6
7
8
9
TIME COOK
0
CLOCK
234
CLEAR/OFF
POWER LEVEL
START/PAUSE
238
FRONT 4 AMP MAX
RESET
RESET
REAR 10 AMP MAX
114
113
111
112

FIG. 15

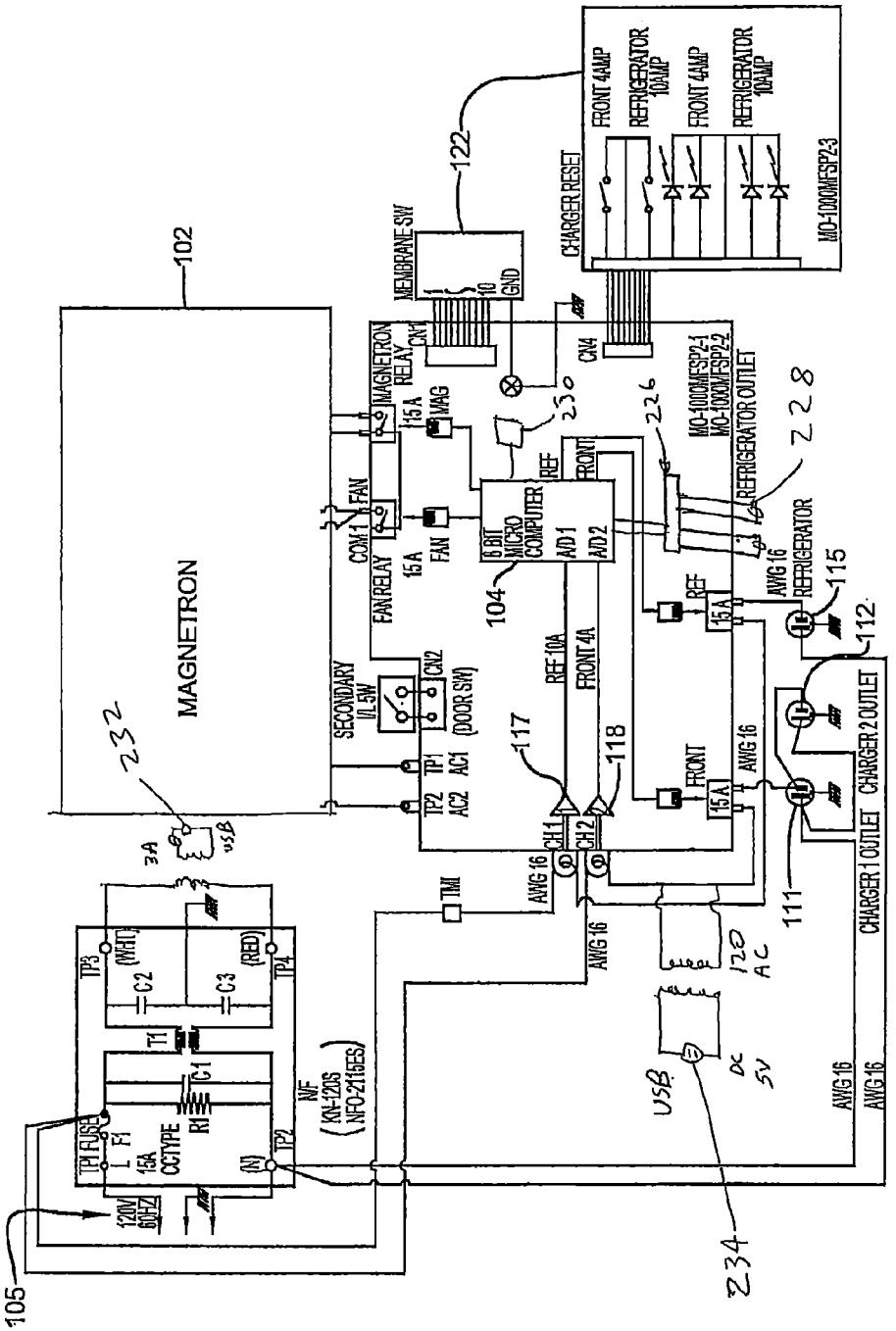
MAGNETRON
102
105
104
122
230
226
228
232
234
111
112
115
117
118
MEMBRANE SW
CHARGER RESET
FRONT 4AMP
REFRIGERATOR 10AMP
MO-1000MFSP2-3
MAGNETRON RELAY
FAN RELAY
SECONDARY I/L SW
(DOOR SW)
8 BIT MICRO COMPUTER
A/D 1
A/D 2
REF
FRONT
REF 10A
FRONT 4A
REFRIGERATOR OUTLET
REFRIGERATOR
CHARGER 2 OUTLET
CHARGER 1 OUTLET
AWG 16
TMI
120 AC
DC 5V
USB
120V 60HZ
TP1 FUSE
15A CCTYPE
N/F (KN-120S NFO-2115ES)
(WHT)
(RED)
3A

FIG. 16

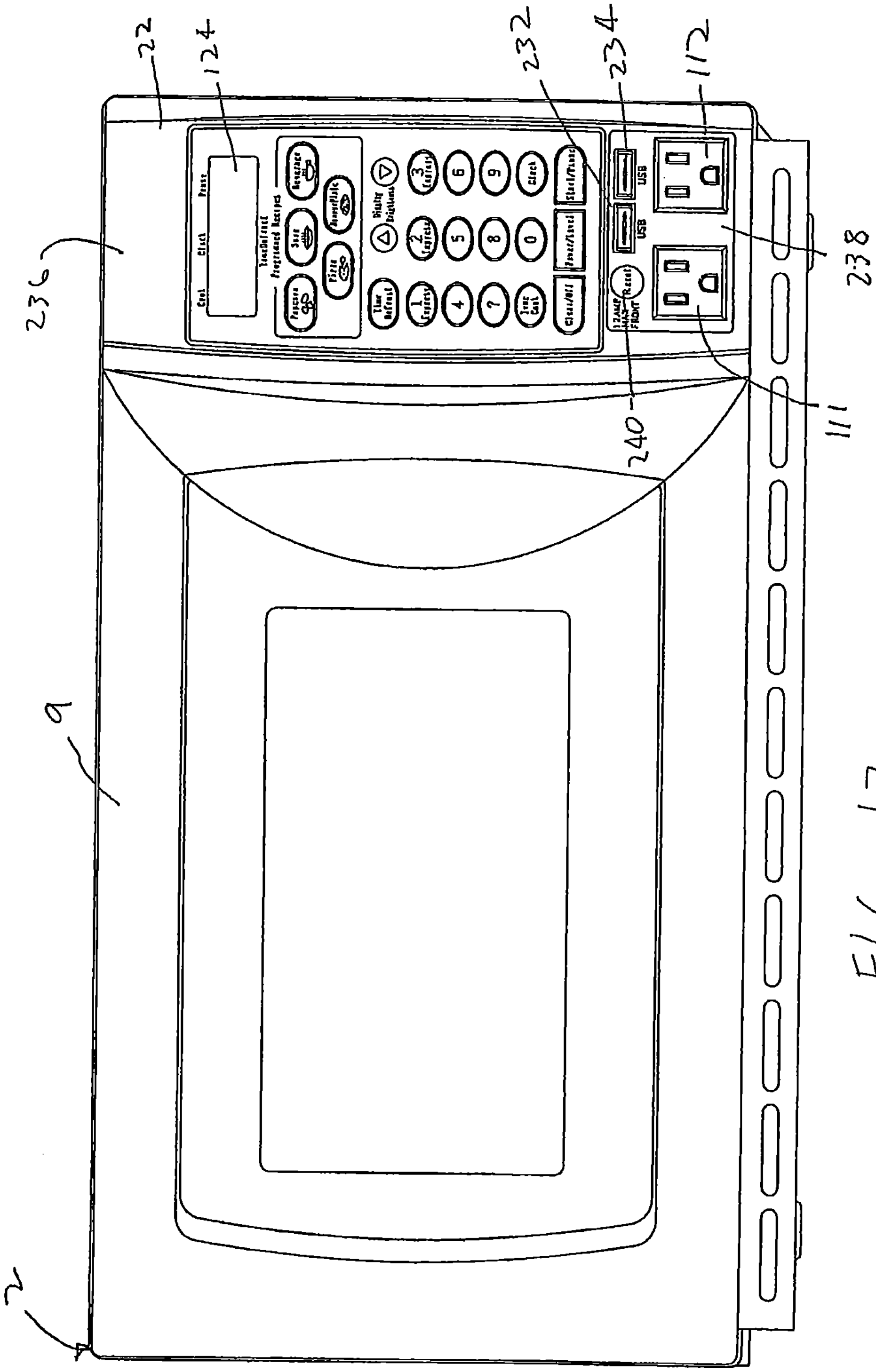

FIG. 17

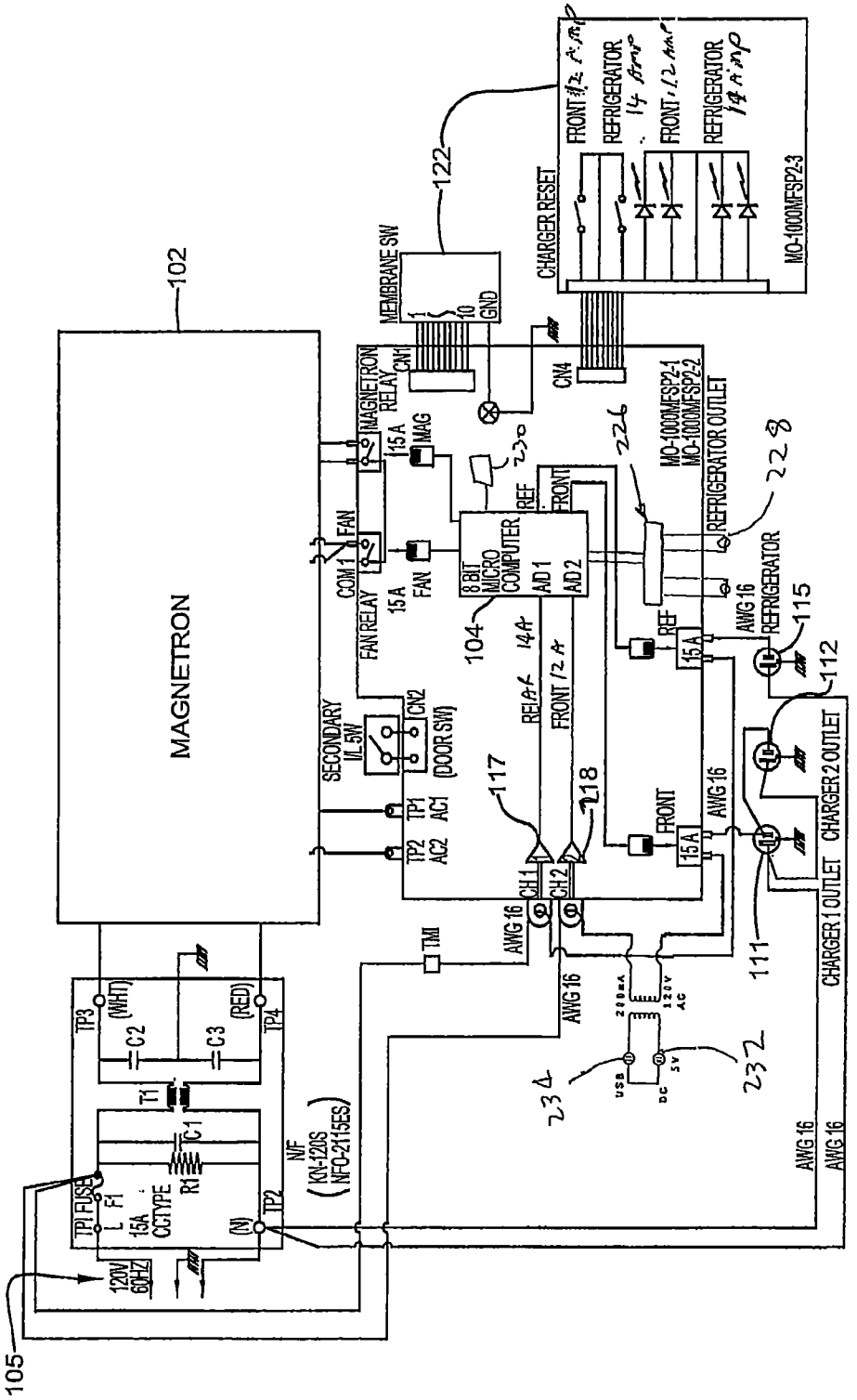
MAGNETRON
102
105
120V 60HZ
TP1 FUSE
F1
15A CCTYPE
R1
C1
T1
C2
C3
TP3 (WHT)
TP4 (RED)
TP2 (N)
N/F (KN-120S NFO-2115ES)
SECONDARY I/L SW
CN2 (DOOR SW)
TP1 AC1
TP2 AC2
MAGNETRON RELAY
15A MAG
COM1 FAN
FAN RELAY
15A FAN
8 BIT MICRO COMPUTER
A/D 1
A/D 2
REF
FRONT
104
MEMBRANE SW
CN1
GND
122
CHARGER RESET
FRONT 12 Amp
REFRIGERATOR 14 Amp
FRONT 12 Amp
REFRIGERATOR 14 Amp
MO-1000MFSP2-3
CN4
MO-1000MFSP2-1
MO-1000MFSP2-2
REFRIGERATOR OUTLET
REFRIGERATOR
AWG 16
REF
15A
FRONT
15A
CH1
CH2
TMI
117
118
111
112
115
CHARGER 1 OUTLET
CHARGER 2 OUTLET
AWG 16
USB
DC 5V
200mA
120V AC
232
234
226
228
230

FIG. 18

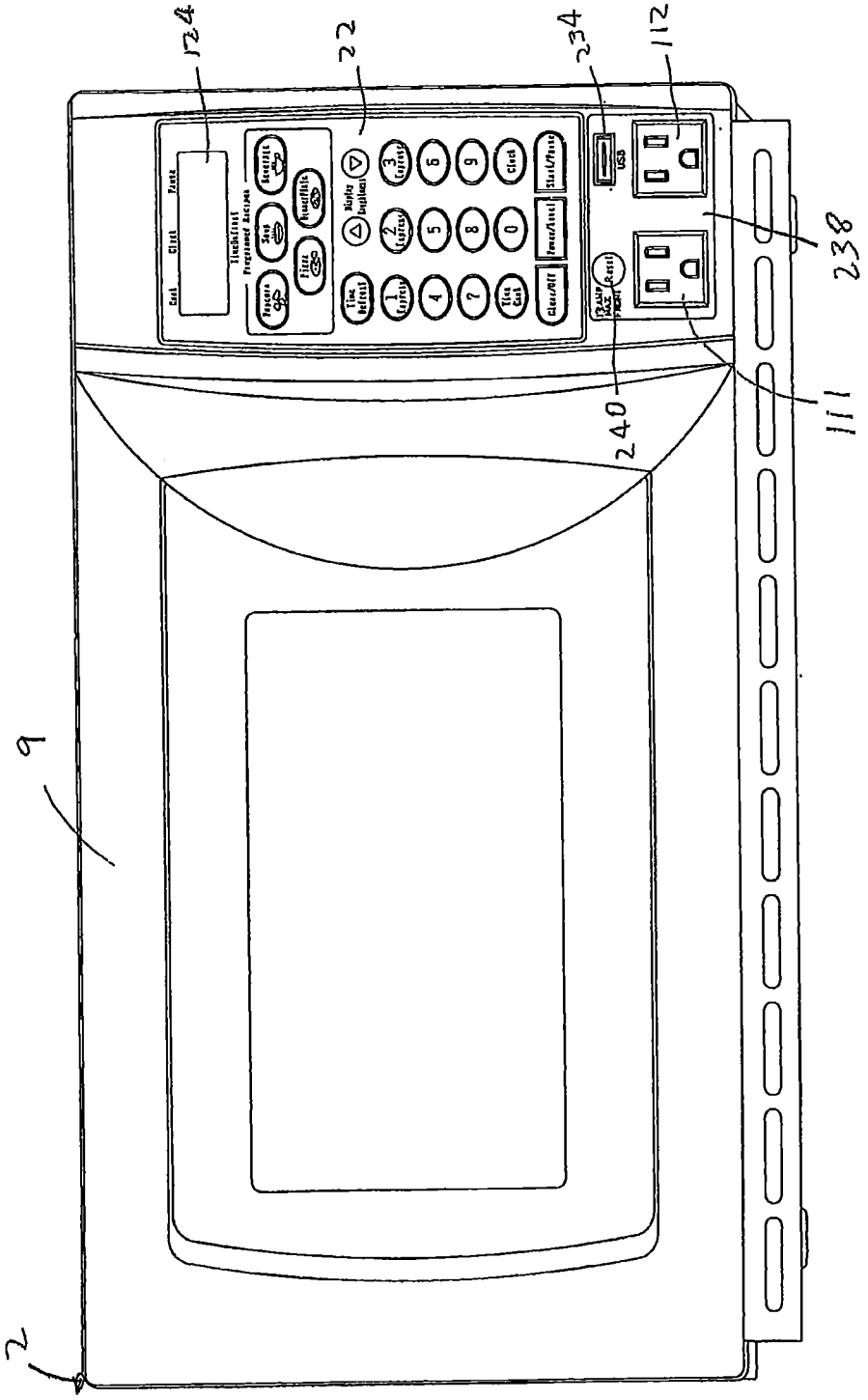

FIG. 19

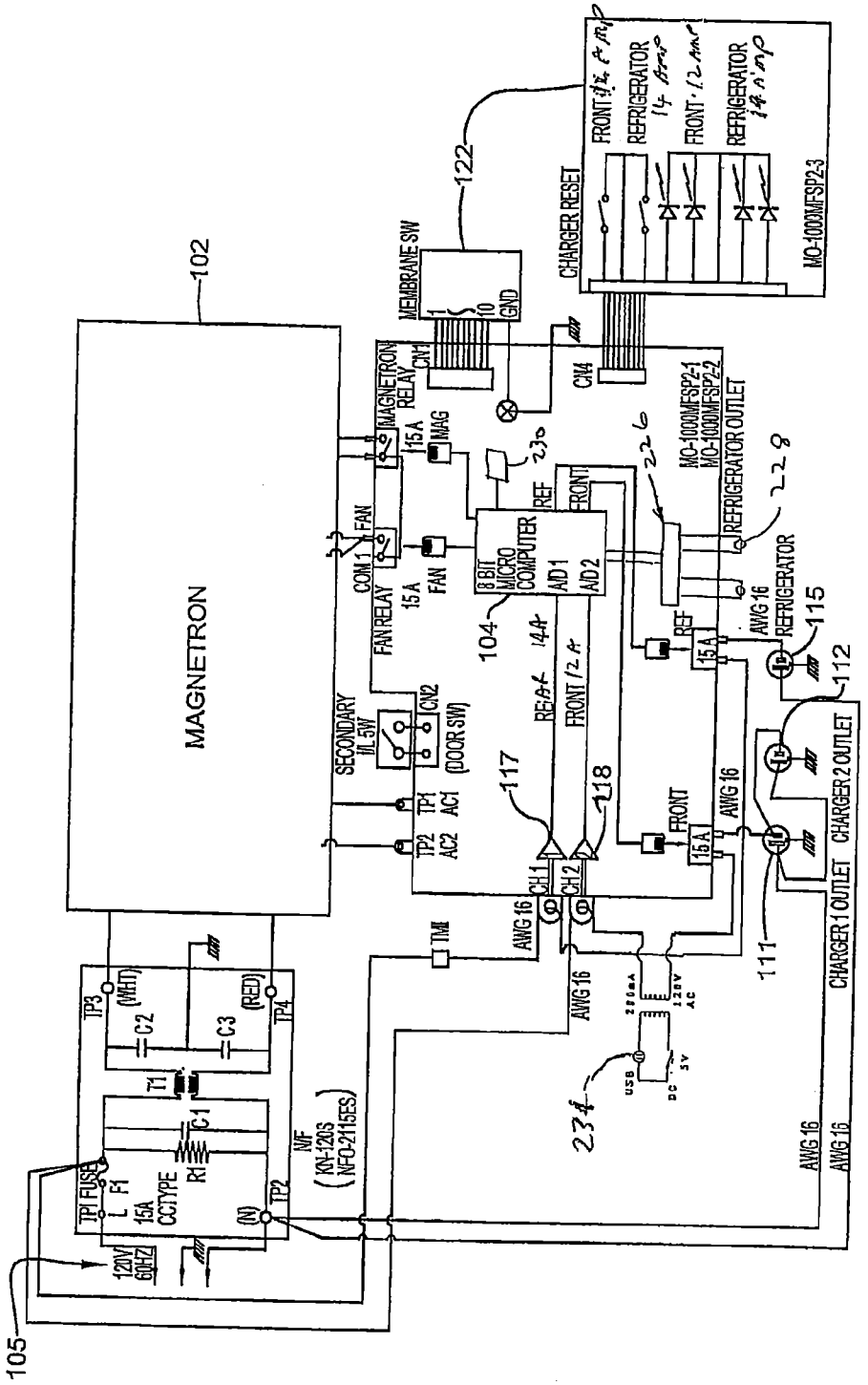
MAGNETRON
102
105
122
104
111
112
115
117
118
234
230
226
228
MEMBRANE SW
CN1
CN4
CHARGER RESET
FRONT
REFRIGERATOR
MO-1000MFSP2-3
MO-1000MFSP2-1
MO-1000MFSP2-2
REFRIGERATOR OUTLET
MAGNETRON RELAY
15A
MAG
FAN
COM 1
FAN RELAY
8 BIT MICRO COMPUTER
A/D 1
A/D 2
REF
FRONT
REFRIGERATOR
AWG 16
SECONDARY I/L SW
CN2
(DOOR SW)
TP1
AC1
TP2
AC2
CH 1
CH 2
TMI
CHARGER 1 OUTLET
CHARGER 2 OUTLET
TP3
(WHT)
C2
C3
(RED)
TP4
T1
C1
R1
TP1 FUSE
L
F1
15A
CCTYPE
(N)
TP2
120V
60HZ
N/F
(KN-120S
NFO-2115ES)
USB
DC
5V
120V
AC

FIG. 20

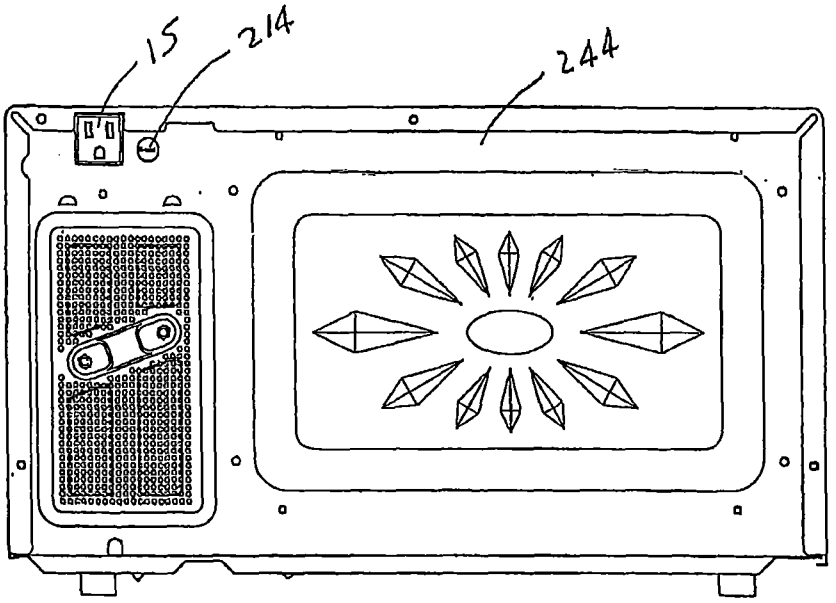

FIG. 21

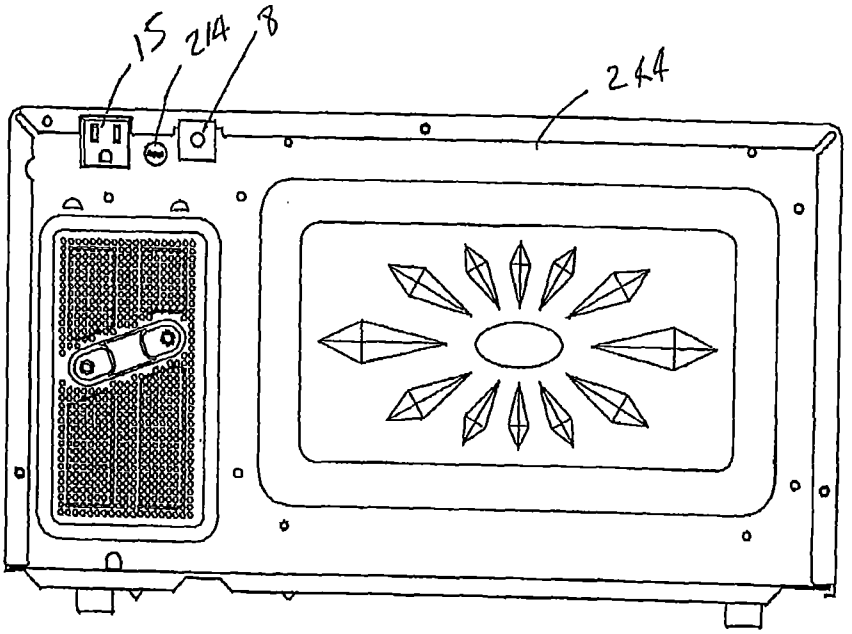

FIG. 22

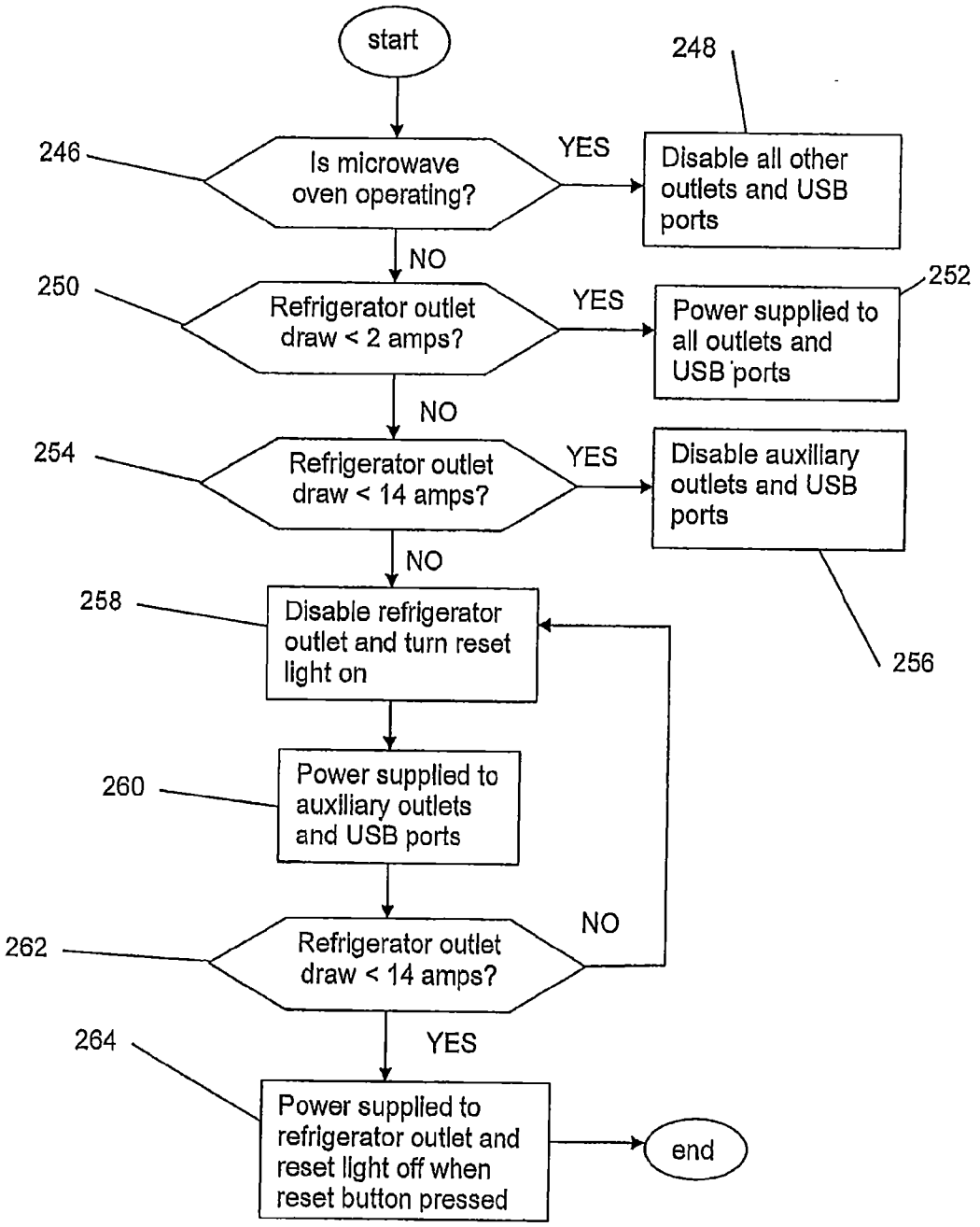
start
248
246
Is microwave oven operating?
YES
Disable all other outlets and USB ports
NO
250
Refrigerator outlet draw < 2 amps?
YES
252
Power supplied to all outlets and USB ports
NO
254
Refrigerator outlet draw < 14 amps?
YES
Disable auxiliary outlets and USB ports
NO
258
Disable refrigerator outlet and turn reset light on
256
260
Power supplied to auxiliary outlets and USB ports
262
Refrigerator outlet draw < 14 amps?
NO
264
YES
Power supplied to refrigerator outlet and reset light off when reset button pressed
end

FIG. 23

MULTIPLE LINKED APPLIANCE WITH AUXILIARY OUTLET

CROSS-REFERENCE TO RELATED APPLICATIONS

[0001] This application is a continuation-in-part of U.S. application Ser. No. 12/317,632 filed on Dec. 23, 2008, which claims benefit under 35 U.S.C. § 119(e) of Provisional Application No. 61/009,419, filed Dec. 28, 2007, the disclosure of which is incorporated herein by reference in its entirety.

FIELD OF THE INVENTION

[0002] This application relates to a system of multiple linked appliances connected to a power supply through a single supply cord. In particular a refrigerator and microwave are connected for single plug operation while providing additional special purpose outlets.

BRIEF DESCRIPTION OF RELATED DEVELOPMENTS

[0003] Combination refrigerator and microwave oven systems are described in U.S. Pat. Nos. 4,880,954 and 4,847,722. In the devices described, the refrigerator is connected to the power supply and provides a connection for the microwave oven to be connected to the same supply. A single plug, therefore, serves to connect both appliances and the current required for each appliance is supplied by the same supply cord and circuit.

[0004] To make this combination attractive for use in dorm rooms, hotel rooms, recreational vehicles, tractor trailer cabs, and other similar locations, it is necessary to provide some means by which the peak currents of both appliances are not demanded from the supply at the same time. Many household circuits are protected from overload conditions by means of an automatic circuit breaker that is activated when current in the circuit exceeds the breaker rating. This is 15 amps in many circuits.

[0005] The duty cycle of a refrigerator used in these combined systems includes a current spike that occurs during the first few seconds of operation. This is the start up current for the refrigerator compressor and is considerably reduced, as the compressor obtains its operational speed. In typical refrigerator appliances the peak current may be in the range of 7 to 9 amps, while the steady state current may level off at 1.4 amps or less. A microwave oven demands a relatively steady 8 to 13 amps. It is apparent that an overload condition will occur frequently, when both appliances are in use, unless some control is exercised.

[0006] In the '954 patent the compressor power is disabled when the microwave is energized. This is accomplished by coupling the timer of the microwave to the compressor power. In addition a door interlock enables the compressor, since the microwave is disabled when the door is open. The '722 patent describes a control circuit for a combination microwave and refrigerator system in which a relay disables the microwave oven for a period of time depending on the rating of the compressor, when the compressor of the refrigerator is energized.

[0007] It would be advantageous to construct a combination microwave/refrigerator system that also provides auxiliary outlets for low power applications, such as for the purpose of recharging cellular phones, operating lap top computers and other low power devices, while controlling the operation of the appliances to avoid overload conditions.

SUMMARY OF THE INVENTION

[0008] In an embodiment of this invention, a combination microwave and refrigerator system is constructed having a single plug input supply. The microwave oven is adapted to provide power to a refrigerator, and to auxiliary receptacles adapted for low power operation. The microwave oven includes a microprocessor controller adapted to monitor operation of the refrigerator compressor and controls the power to the microwave magnetron and other components. The current to the low power receptacles are separately monitored for control by the microwave controller. The microwave controller is adapted to balance the duty cycles of the connected appliances attached to avoid overload conditions. A control algorithm is implemented internally within the microwave controller. A receptacle for the refrigerator and the low power auxiliary receptacle may be implemented as part of the microwave control panel.

[0009] In one embodiment, the auxiliary outlets are constructed to provide low power for the purpose of recharging cellular phones, personal media devices, digital cameras, in addition to operating lap top computers and other low power devices. The current to the auxiliary outlets is sensed and provided to the microwave controller.

[0010] In another embodiment, the power to the auxiliary outlets is disabled by the microwave controller when the microwave magnetron is energized or whenever the current to the auxiliary outlets exceeds a preset value.

[0011] In one embodiment, a control model is established and executed by the microwave controller. The model is dependent on the state of operation of the microwave magnetron. As part of the control model, the power to the compressor is monitored to sense operation of the compressor. When power to the microwave is demanded, the compressor is disabled for a preset minimum period. When microwave demand ceases, refrigerator power is restored provided, that the preset minimum period has expired.

[0012] In another embodiment of the control module, sensing circuits are connected to monitor current to the auxiliary outlets. The control model is adapted to disable the power to the auxiliary receptacles, if the microwave is in operation. In addition the auxiliary receptacles are disabled if a predetermined maximum current is sensed. Another control model is based on operation of the refrigerator and operates to disable the auxiliary receptacles when the compressor is in the start-up mode.

[0013] In one aspect of the invention, a non-transitory processor storage readable medium having processor readable program code embodied therein for operating a control processor to control a system of multiple linked appliances having a microwave oven, a refrigerator, and an auxiliary power supply outlet is provided. The processor readable program code causes the control processor to disable the refrigerator and the auxiliary power supply outlet, when the microwave demands power, and enable the auxiliary power supply outlet when the microwave is off.

BRIEF DESCRIPTION OF THE DRAWINGS

[0014] The system of this invention is explained in more detail below with reference to the accompanying drawing, in which:

[0015] FIG. **1** is a front perspective view of an embodiment of an appliance system of this application;

[0016] FIG. **2** is a rear perspective view of the embodiment of FIG. **1** showing an alternative arrangement;

[0017] FIG. **3** is a block diagram of an embodiment of the system of this application;

[0018] FIG. **4** is a schematic diagram of the embodiment of FIG. **3**;

[0019] FIG. **5** is a flow diagram of an embodiment of this application;

[0020] FIG. **6** is a flow diagram of another embodiment of this application;

[0021] FIG. **7** is a flow diagram of another embodiment of this application;

[0022] FIG. **8** is a graph illustrating the duty cycles of the appliances in the system of FIG. **3**;

[0023] FIG. **9** is a block diagram of an alternate embodiment of this application;

[0024] FIG. **10** is a schematic diagram of the embodiment of FIG. **9**; and

[0025] FIG. **11** is an illustration of a control panel of the embodiment of FIG. **9**.

[0026] FIG. **12** is a front view of the microwave oven according to another embodiment of this application.

[0027] FIG. **13** is a side view of the microwave oven of FIG. **12**

[0028] FIG. **14** is a top perspective view of a charging pad on the top portion of the microwave oven of this application.

[0029] FIG. **15** is an illustration of a control panel of an alternate embodiment of this application.

[0030] FIG. **16** is a schematic diagram of the embodiment of FIG. **15**.

[0031] FIG. **17** is a front view of the microwave oven according to another embodiment of this application.

[0032] FIG. **18** is a schematic diagram of the embodiment of FIG. **17**.

[0033] FIG. **19** is a front view of the microwave oven according to another embodiment of this application.

[0034] FIG. **20** is a schematic diagram of the embodiment of FIG. **19**.

[0035] FIG. **21** is a rear view of the microwave oven according the embodiments of FIGS. **12-19**.

[0036] FIG. **22** is a similar view as that of FIG. **21** except that the AC cord is shown.

[0037] FIG. **23** is a flow diagram of an embodiment of this application.

DESCRIPTION OF THE PREFERRED EMBODIMENT

[0038] A multiple linked appliance system **1**, for example, a combination microwave oven **2**, a refrigerator **3** incorporating features of the present invention is illustrated in the figures. Although the present invention will be described with reference to the embodiments shown in the drawings, it should be understood that the present invention may have many alternate forms. In addition, any suitable size, shape or type of elements or materials could be used. The computer operated devices described in this application may be constructed having one or several processors and one or several program product modules stored in one or several memory elements. For illustration, computer components may be described as individual units by function. It should be understood, that in some instances, these functional components may be combined.

[0039] One embodiment of a multi-appliance interconnected system **1** is illustrated in FIG. **1**. This embodiment consists of two stand alone appliances, a refrigerator **3** and a microwave oven **2**. Refrigerator **3** is connected to microwave oven **2** by power cord **7** to refrigerator receptacle **15**, shown at the rear of the microwave **2** in FIG. **2**. Refrigerator **3** is generally subject to control by the microwave microprocessor controller **4** of the microwave oven **2**. A single cord **8** provides input power to the system **1** from receptacle **5** through microwave **2**. In the case where stand alone appliances are used, as shown in FIGS. **1** and **2**, microwave oven **2** is connected directly to power source **5**. The refrigerator **3**, as the heaviest component, is used as the base with the microwave oven **2** stacked on top. In the selection of the refrigerator **3**, it would be advantageous in one embodiment for the height of the refrigerator to be no more than 48 inches above the floor. This provides a more ergonomic operation of the microwave oven **2** for the user. In addition, in the stacked position of the appliances in an embodiment, the doors **9** and **10** of the microwave **2** and refrigerator **3**, respectively, should be arranged in a common plane. The appliances may be of standard design with features commonly available. The internal components of the appliances are well known and do not need to be described herein.

[0040] Microprocessor **4** is the controller for the operation of the microwave oven **2** and is also adapted to control the other components of system **1**, as shown in FIG. **3**. Power is distributed throughout the system **1** under control of microwave controller **4** and digitally operated switches such as relays **19** and **20** of FIG. **3**. Power is distributed to each of the appliances **2** and **3**, and to auxiliary low power receptacles **11** and **12**. In use lamps **13** and **14** in the form of LED'S or the like may be connected to the auxiliary receptacles to indicate power being available or disabled. The low power auxiliary receptacles **11** and **12** are provided to permit convenient access for plugging in a low power device for example, rechargeable devices, such as cellular phones, PDA's, or other electronic devices that do not demand high power. As shown in the graph of FIG. **8**, there are instances during which, if more than one of the appliances is in use, the cumulative current would cause an overload condition.

[0041] Control panel **22** of microwave oven **2** may be adapted to provide a display of the particular status of the controlling relays, for example, LED's **13** and **14** may indicate that power to the outlets **11**, and **12** are disabled or available. In one embodiment the lamps will light when power is available at the outlet and flash when disabled. In another embodiment the lamps will light when power is disabled at the outlet and not activate when power is available at the outlet as a means to reduce the Standby Power requirements. A button operated touch panel provides manual control.

[0042] As shown in FIG. **4**, in order to control the power to the microwave **2**, refrigerator **3** and receptacles **11** and **12**, sensing circuits, may be coupled to the controller to monitor current to the appliances and the auxiliary receptacles. A relay **20** is connected in the power line to the refrigerator and may be actuated by signals from controller **4**. In particular, according to an embodiment of this application, sensing circuits **16**, as shown in FIG. **4**, have sensors **17** and **18** coupled to the power line of the auxiliary outlets **11** and **12** to monitor the current being used by a connected device. Sensors **17** and **18** may be current sensing transformers of the type available from Triad Magnetics of Corona, Calif. The signals generated

by sensors **17** and **18** may be used to activate switches or other control components, such as relays **19**. Relays **19** may be actuated by controller **4** to enable and disable power to the low power auxiliary outlets **11** and **12** in response to signals from sensors **17** and **18**. A maximum current may be set by controller **4** to prevent overload of the outlets **11** and **12**. In one embodiment of the system of this application, the maximum current limit is set at 2 amps.

[0043] In another embodiment, a clock device **21** could be used to provide timed delays during which, for example, refrigerator **3** would be prevented from undesirably rapid on/off cycles. When refrigerator **3** is disabled during microwave operation, a time delay of 3 minutes is provided during which refrigerator **3** will remain disabled, even if microwave use is only for a short period. Controller **4** may be programmed to manage the power to the components of the system to avoid overload conditions, while minimizing disruptions in the use of an individual appliance. A model of operative events and related control operations may be designed into the program executed by controller **4** to provide a control methodology as illustrated in FIGS. **5-7**.

[0044] In one embodiment, as illustrated in the block diagram of FIG. **3**, microprocessor controller **4**, constructed as part of the controller for microwave **2**, would be adapted to process the sensor signals and identify particular events in the system **1** related to a particular appliance. Microprocessor **4** would control the power to microwave **2** and refrigerator **3** and also low power receptacles **11** and **12** to avoid overload conditions. The microprocessor **4** could be programmed to execute the control methods illustrated and described below. In a preferred embodiment, the controller **4** is the control microprocessor for microwave oven **2** and is adapted to execute the control algorithms described below. Controller **4** is coupled directly to refrigerator outlet **15** and low power outlets **11** and **12**.

[0045] In one embodiment, shown in FIG. **1**, the outlets **11**, and **12**, are installed as part of the front control panel of microwave oven **2**. In FIG. **2**, in another embodiment, the auxiliary receptacles **11** and **12** and refrigerator receptacle **15** are accessible at the rear of the microwave oven **2**. In these alternative embodiments, the microwave oven **2** is connected by supply cord **8** directly to power supply receptacle **5**. Refrigerator **3** is connected by power cord **7** to receptacle **15** in microwave oven **2** as shown in FIG. **2**.

[0046] In one embodiment, control models are established as shown in FIGS. **5-7** for execution by the controller **4**. These models can be in the form of algorithms stored in a computer readable medium, such as software or firmware within microprocessor **4**. The models shown are, in the first instance, dependent on the state of operation of microwave oven **2**. The current demands of the microwave **2** are generally the most significant contribution to overload, as shown in FIG. **8**. To avoid overload conditions, power to the low power receptacles **11** and **12** and refrigerator receptacle **15** is disabled during microwave operation. If the refrigerator **3** is under power when the microwave **2** is turned on, the power, to the refrigerator is turned off and clock **21** begins to count for a predetermined period during which the compressor of refrigerator **3** cannot be restarted. A time delay, for example, of 3 minutes, may be set and when this delay period is expired, receptacle **15** may again be enabled, providing microwave operation has ceased. This prevents a too rapid restart of the compressor that may otherwise result in damage.

[0047] In the embodiment shown in FIG. **5**, if low power is demanded at receptacle **11** or **12** and microwave oven **2** is not in use, power is supplied to the low power receptacles, providing further, that the current demand in an individual outlet does not exceed a preset limit, for example, 2 amps. Since the auxiliary outlets may be enabled during refrigerator operation, there may be an overload generated at peak compressor operation. In one embodiment the microwave controller acts to disable the auxiliary outlets during compressor startup to prevent accidental overload of the system. Therefore as illustrated in the flow diagram of FIG. **5**, controller may be adapted to check the operational status of the refrigerator, as well as the microwave oven, prior to enabling the auxiliary outlets.

[0048] FIGS. **9-11** illustrate another embodiment. In this embodiment the sensing components **117** and **118** are connected to reduce the risk of overload by the combined demands of the auxiliary outlets **111** and **112** and the refrigerator outlet **115**. In the configuration, as shown in FIG. **10**, current sensor **117** is connected to monitor the current in the refrigerator outlet **115** and is constructed to limit the refrigerator current component so that it does not exceed 10 amps. Current sensor **118** is connected to monitor the combined current in the auxiliary outlets **111** and **112**. Current sensor **118** is constructed to limit the combined auxiliary outlet current to 4 amps. In this manner the risk of overload is minimized In the block diagram of FIG. **9**, the microwave **102** having controller **104** is connected to power supply **105**. Clock **121** provides a timing device to generate a restart delay for refrigerator **103**. Sensing circuit/sensor **117** is connected to monitor the current demanded by refrigerator **103** and sensing circuit/sensor **118** is connected to low power receptacles **111** and **112** to monitor the combined current in receptacle **111** and **112**.

[0049] In this embodiment, as shown in FIG. **11**, a control panel **122** is arranged with a keypad **123** for manual control and a display **124**. Auxiliary outlet **111** is shown as accessible from the front and is associated with a status LED indicator and reset button **113** that may be caused to be on during use and switch to a flashing mode when the microwave is running Refrigerator outlet **115** is also shown to be accessible from the front panel and is associated with an LED indicator and reset button **114**. Similarly LED indicator **114** is controlled to be on during use of the refrigerator and to switch to a flashing mode when the microwave is operating. In another embodiment, the status LED indicator and reset button **113** may be caused to be off during use and switched on or to a flashing mode when the microwave is running Similarly, in this another embodiment, the LED indicator **114** is controlled to be off during use of the refrigerator and switched on or to a flashing mode when the microwave is operating.

[0050] A further embodiment of the processor operational model is shown in FIG. **6**. In this model, the refrigerator demands power. This may be triggered by a temperature drop in the refrigerator and involve start up of the refrigerator compressor with an associated peak power demand. If the microwave is on, the recycling of the refrigerator will be delayed. If the microwave was on and subsequently cycled off, the clock **21** must be checked to determine if the restart can occur. Under some circumstances, it may be necessary to give the refrigerator priority to prevent an undesirable drop in temperature. In the latter instance, microcontroller can be coupled to the refrigerator temperature sensor to execute a

time sequence during which the microwave will be disabled to allow the refrigerator to return to proper operating temperatures.

[0051] In the embodiment of FIG. **7**, priority is given to the power demands of the microwave oven, as indicated above. Use of the receptacles **11**, **12**, and **15** are, therefore, disabled during microwave operation. The operational models, illustrated in FIGS. **5-7**, may be established by algorithms that are programmed or imbedded in controller **4**.

[0052] In this manner a system of linked appliances, including a microwave oven, refrigerator, and a low power appliance may all be connected through a common supply cord without the risk of inconvenient interruptions in use caused by overloads.

[0053] In another exemplary embodiment as illustrated in FIGS. **12** and **13**, the auxiliary outlets or receptacles **211**, **212** may be installed as part of the front control panel **222** of the microwave oven **202** and located on the upper portion **270** of the front control panel **222**. The auxiliary outlets **211**, **212**, front control panel **222** and microwave oven **202** are similar to auxiliary outlets **11**, **12**, front control panel **22**, and microwave oven **2** except for that discussed below. In this exemplary embodiment, the auxiliary outlets **211**, **212** are positioned side by side with respect to each other with each of the auxiliary outlets **211**, **212** being at the same height as the other. The auxiliary outlet **211** of FIG. **12** may be associated with a status LED indicator and reset button **213**, which is located on the lower portion **272** of the front control panel and in vertical alignment with the auxiliary outlet **211**. The status LED indicator and reset button **213** may be caused to be on during use and switched to a flashing mode when the microwave oven **202** is running. The auxiliary outlet **212** of FIG. **12** may be associated with status LED and reset button **214**, which is located on the lower portion of the front control panel and in vertical alignment with the auxiliary outlet **212**. The status LED indicator and reset button **214** may be caused to be on during use and switched to a flashing mode when the microwave oven **202** is running. In another embodiment, the status LED indicator and reset button **213** may be caused to be off during use and switched on or to a flashing mode when the microwave oven is running Similarly, in this another embodiment, the status LED indicator and reset button **214** may be caused to be off during use and switched on or to a flashing mode when the microwave oven is running All other elements are similar in structure and function as that of the embodiments shown in FIGS. **1-11**. Thus, the same reference numbers will be used in this exemplary embodiment to indicate elements that are similar in the embodiments shown in FIGS. **1-11**.

[0054] Smart technology may be included in each of the exemplary embodiments. For example, a user may be able to regulate the refrigerator **3** such as by turning it on and off remotely by a remote device **217**. The remote device **217** may be a hand held device such as a cellular phone. The cell phone may also be a smart phone. A charging pad **219** (FIG. **14**) may be provided on the microwave oven **2** or other suitable place to receive the smart phone for charging the smart phone. For example, a wireless charging pad **219** may be placed on top **225** of the microwave oven **2** for recharging the smart phone. The charging pad **219** may be built into the top **225** of the microwave oven **2** or be a separate piece that is mounted to the top **225** of the microwave oven **2**. The charging pad **219** includes a recessed area **220** for receiving an item to be charge such as the smart phone. The charging pad **219** may include a wireless connection **221** for the remote control device **217** for controlling the microwave or refrigerator such as turning off or on the microwave oven **2** and/or refrigerator **3**. USB ports **223**, **224** may be provided in the charging pad **219**. Alternatively, or in addition, power outlets may be provided in the charging pad **219**. Alternatively, the charging pad **219** may be provided on the front, side, rear or bottom of the microwave oven **2**.

[0055] As seen in FIGS. **16**, **18**, and **20**, a safety sensor **226** such as a smoke or gas sensor may be provided in the microwave oven **2**. The smoke sensor **226** operates to turn off the microwave oven upon sensing smoke or polluted air indicative of a dangerous condition such as the microwave being on fire. The safety sensor **226** may be powered on when the microwave oven is in operation. The sensor **226** may be an alcohol sensor that is coupled with a thermistor **228**. The alcohol sensor **226** may operate in the temperature range of 32 to 104 degrees Fahrenheit. When abnormal heating is sensed by the thermistor **228**, the thermistor **228** causes the alcohol sensor **226** to turn on and check the gas.

[0056] If the alcohol sensor **226** senses polluted air that is indicative of a dangerous condition, a shutdown signal is outputted by the alcohol sensor to the microcontroller **104**. Upon receiving the shutdown signal, the microcontroller **104** determines that the microwave oven **2** should be shut down and causes the microwave to shutdown. If (after the alcohol sensor is caused to be turned on by the thermistor) the alcohol sensor **226** senses air that is not indicative of a dangerous condition such as the air produced by normal cooking of food in the microwave oven **2**, the alcohol sensor will not send a shutdown signal to the microcontroller **104**.

[0057] Alternatively or in addition, a fault indicator **230** may be coupled to the microcontroller **104** or other circuitry to indicate that there is a dangerous condition upon detection by the alcohol sensor **226**. For example, the fault indicator **230** may be a buzzer that is activated in response to the alcohol sensor **226** sensing polluted air indicative of a dangerous condition. In another example, fault indicator **230** may include the display **124** displaying a fault message such as "E-1" in response to the alcohol sensor **226** detecting polluted air indicative of a dangerous condition.

[0058] The embodiment may include a combination of fault indicators. For example, upon the alcohol sensor **226** sensing air that is indicative of a dangerous condition, a shutdown signal is outputted by the alcohol sensor **226** to the microcontroller **104**. Upon receiving the shutdown signal, the microcontroller **104** determines that the microwave oven **2** should be shut down and causes the microwave oven **2** to shutdown. In addition, a buzzer is activated and the display **124** displays a fault message such as "E-1" in response to the alcohol sensor **226** sensing polluted air indicative of a dangerous condition.

[0059] The alcohol **226** sensor may be reset automatically upon the alcohol sensor **226** not detecting gas indicative of the dangerous condition. Alternatively or in addition, the alcohol sensor **226** may be reset upon opening of the microwave door **9** of the microwave oven **2**. The display may display a "bar" or other suitable icon to indicate that the alcohol sensor **226** is turned on. Other types of suitable safety sensors may also be used instead of the alcohol sensor to detect a dangerous condition.

[0060] As seen in FIGS. **15** and **16**, the front control panel **22** of the microwave oven **2** may include Universal Serial Bus (USB) ports **232**, **234** for connection, communication, and

power supply between the front control panel **22** and electronic devices such as a personal computer, cell phone, iPod®, iPad®, or other suitable device to allow communication and/or charging of the electronic device plugged into the USB ports. In one exemplary embodiment, a first USB port **232** may be provided on the upper portion **236** of the front control panel **22**, and a second USB port **234** may be provided on the lower portion **238** of the front control panel **22** above the auxiliary outlets **111**, **112** and between the reset buttons **113**, **114** as seen in FIG. **15**. The first USB port **232** may include a three ampere fuse and a linear time-variant system (LVT) of 100 mA, 120 volts, and 12 watts. The second USB port **234** may include a linear time-variant system (LVT) of 200 mA, 120 volts, and 24 watts. The second USB port **234** may also be reset. The current sensor **118** may be constructed to limit the second USB port and the two auxiliary outlets to 12 amps. The USB ports **232**, **234** may be in operative connection with respective printed circuit boards. Alternatively or in addition, one or more USB ports may be provided on the rear of the microwave oven, the sides of the microwave oven, and/or the top or bottom of the microwave oven. Alternatively or in addition, one or more auxiliary outlets may be provided on the rear of the microwave oven, the sides of the microwave oven, and/or the top or bottom of the microwave oven. Alternatively, the refrigerator outlet may be provided on the top, bottom, or one of the sides of the microwave oven.

[0061] FIGS. **17** and **18** show another exemplary arrangement of the USB ports **232**, **234**. In this arrangement, the first and second USB ports **232**, **234** are located side by side on the lower portion **238** of the front control panel **22** above the auxiliary outlets **111**, **112**. The USB ports **232**, **234** are also located rightwardly (as viewed in FIG. **17**) adjacent a status LED indicator and reset button **240**. In this exemplary arrangement, current sensor **218** is connected to monitor the combined current in the USB ports **232**, **234** and the auxiliary outlets **111** and **112**. The current sensor **218** is constructed to limit the combined current in the USB ports and auxiliary outlets **111** and **112** to 12 amperes. The LED indicator and reset button **240** may light on when power to the auxiliary outlets **111**, **112** and the USB ports **232**, **234** is available and flash when disabled. In another embodiment, the LED indicator and reset button **240** may be off when power to the auxiliary outlets **111**, **112** and the USB ports **232**, **234** is available and light on or flash when disabled. Depressing the LED indicator and reset button **240** enables the auxiliary outlets **111**, **112** and the USB ports **232**, **234** so that power may be supplied to them when the combined current in them falls from above to below the limit.

[0062] FIGS. **19** and **20** show an alternative arrangement in which one USB port **234** is located above the auxiliary outlets **111**, **112** and rightwardly adjacent the status LED indicator and reset button **240**. In this exemplary arrangement, the current sensor **218** is connected to monitor the combined current in the USB port **234** and auxiliary outlets **111** and **112**. The current sensor **218** is constructed to limit the combined current in the USB port **234** and auxiliary outlets **111** and **112** to 12 amperes. Alternatively, the current sensor **218** may be constructed to limit the combined current in the USB port **234** and the auxiliary outlets **111** and **112** to 13 amperes. The LED indicator and reset button **240** may light on when power to the auxiliary outlets **111**, **112** and the USB port **234** is available and flash when disabled. In another embodiment, the LED indicator and reset button **240** may be off when power to the auxiliary outlets **111**, **112** and the USB port **234** is available and light on or flash when disabled. Depressing the LED indicator and reset button **240** enables the auxiliary outlets **111**, **112** and the USB port **234** so that power may be supplied to them when the combined current in them falls from above to below the limit. All other elements of the embodiments of FIGS. **17-20** are similar in structure and function as the embodiment shown in FIGS. **1-11**. Thus, the same reference numbers will be used in this exemplary embodiment to indicate elements that are similar in the embodiments shown in FIGS. **1-11**.

[0063] FIG. **21** shows the rear portion **244** of the microwave oven for the embodiments shown in FIGS. **12-20**. Refrigerator outlet **15** is shown to be provided on and accessible from the rear portion **244** of the microwave oven and is associated with the LED indicator and reset button **214**, which is also provided on the rear portion **244** of the microwave oven. FIG. **22** is a similar view as FIG. **21** except that AC cord **8** for the microwave oven is shown.

[0064] In the embodiments shown in FIGS. **12-22**, control models may be established for execution by the controller or microprocessor **4**. These models can be in the form of algorithms stored in a computer readable medium, such as software or firmware within the microprocessor **104**. The models or scenarios are, in the first instance, dependent on the state of operation of the microwave oven **2**. The current demands of the microwave oven **2** are generally the most significant contribution to overload. To avoid overload conditions, power to the low power receptacles or auxiliary outlets, refrigerator receptacle, and/or USB ports is disabled during microwave operation.

[0065] FIG. **23** shows a flow chart illustrating several control models or scenarios. The microprocessor **104** begins by determining whether the microwave oven is turned on or operating in step **246**. When the microwave oven is turned on or operating, the rear refrigerator outlet **15**, the two auxiliary outlets **111**, **112** on the front control panel **22**, and the two USB ports **232**, **234** on the front control panel are all turned off or disabled, so that the total draw of current for the combination microwave and refrigerator is not over 15 amperes as indicated in step **248**.

[0066] When the microwave oven is not operating and items are plugged into the two USB ports **232**, **234**, two auxiliary outlets **111**, **112**, and rear refrigerator outlet **15**, then the microprocessor **104** determines whether the refrigerator outlet **15** is drawing less than 2 amperes (approximately the average amperes when the refrigerator is running) in step **250**. If the refrigerator outlet **15** is drawing less than 2 amperes, then all the outlets **15**, **111**, **112** and USB ports **232**, **234** are enabled, so that power may be supplied to them as indicated in step **252**. If the refrigerator outlet **15** not drawing less than 2 amperes, the microprocessor **104** determines whether the refrigerator outlet **15** is drawing less than 14 amperes in step **254**. If the refrigerator outlet **15** is drawing less than 14 amperes but not less than or greater than or equal to 2 amperes, then the auxiliary outlets **111**, **112** and USB ports **232**, **234** are disabled or turned off so that no power may be supplied to them as indicated in step **256**. The refrigerator outlet **15** remains enable. If the refrigerator outlet **15** is not drawing less than 14 amperes or drawing greater than or equal to 14 amperes, then the refrigerator outlet **15** is disabled in step **258**. This may be accomplished by tripping the relay **20** of the reset circuit off. In addition, the red LED light on the LED indicator and reset button **214** is turned on to identify the disablement condition of the refrigerator. Then, in step **260**,

the auxiliary outlets **111**, **112** and USB ports **232**, **234** are enabled so that power may be supplied to them.

[0067] Then, the microprocessor determines whether the refrigerator outlet **15** is drawing less than 14 amperes in step **262**. If the refrigerator outlet **15** is not drawing less than 14 amperes or drawing greater than or equal to 14 amperes, then the refrigerator outlet **15** remains disabled and the red LED light on the LED indicator and reset button **214** remains turned on to identify the disablement condition of the refrigerator **3**. This condition may occur, for example, if an electrical heater is plugged into the refrigerator outlet **15**. When the refrigerator outlet **15** draws less than 14 amperes resulting from the overload condition being eliminated, the refrigerator outlet **15** will be enabled so that power may supplied to the refrigerator outlet **15** upon the LED indicator and reset button **214** being depressed as indicated in step **264**. Depression of the LED indicator and reset button **214** in this condition will also turn off the red LED light. The process then ends. It should be noted that the microprocessor **104** can make the determination in steps at the same time or in a different order.

[0068] It should be understood that the above description is only illustrative of the invention. Various alternatives and modifications can be devised by those skilled in the art without departing from the invention. Accordingly, the present invention is intended to embrace all such alternatives, modifications and variances which fall with the scope of the appended claims.

What is claimed is:

1. A system of linked appliances comprising:

a microwave oven connected to a source of power and having a control processor for controlling the operation of the microwave oven;

a first power supply outlet provided on the microwave oven;

a refrigerator connected to the source of power by connection to the first power supply outlet;

a second power supply outlet connected to the source of power through the control processor, the second power supply outlet adapted to receive an appliance having lower power requirements than power requirements of the refrigerator;

sensing components connected to sense current demanded at the second power supply outlet, and generating signals indicative thereof;

wherein the control processor is configured to enable or disable power to the microwave oven, the first power supply outlet and the second power supply outlet, according to an algorithm in the control processor, and wherein the algorithm causes the control processor to:

disable the refrigerator and the second power supply outlet, when the microwave oven demands power; and

enable the second power supply outlet when the microwave oven is off; and

wherein the microwave oven includes a front portion, wherein the front portion includes a door and a front control panel, wherein the front control panel includes the second power supply outlet.

2. The system according to claim **1** wherein the control processor further disables the second power supply outlet when the sensing components signals indicate current in excess of a predetermined limit.

3. The system according to claim **2**, wherein the predetermined current limit is two amps.

4. The system according to claim **1**, wherein the control processor starts a clock when the refrigerator is disabled and prevents the subsequent enabling of the refrigerator before the expiration of a predetermined time limit

5. The system according to claim **1**, wherein the second power supply outlet further comprises at least two auxiliary outlets to provide power to charge battery operated electronic devices and the sensing components are connected to sense the current demanded at each of the auxiliary outlets.

6. The system according to claim **4**, wherein the predetermined time period is three minutes.

7. The system according to claim **1**, wherein the sensing components further comprise a first current sensor connected to monitor the current in the first power supply outlet and a second current sensor to monitor the current in the second power supply outlet and wherein the control processor, in response to the first and second current sensors is configured to limit the combined current in the first and second power supply outlets to a predetermined value.

8. The system according to claim **7** wherein the predetermined value is less than 15 amps.

9. The system according to claim **1**, wherein the second power supply outlet further comprises at least two auxiliary outlets to provide power to charge battery operated electronic devices; and wherein the sensing components further comprise a first current sensor connected to monitor the current in the first power supply outlet and a second current sensor to monitor the combined circuit current in the at least two auxiliary outlets and wherein the control processor, in response to the first and second current sensors is configured to limit the combined current in the first and second power supply outlets to a predetermined value.

10. The system according to claim **9** wherein the predetermined value is less than 15 amps.

11. A system of linked appliances comprising:

a microwave oven connected to a source of power and having a control processor for controlling the operation of the microwave oven;

a first power supply outlet provided on the microwave oven;

a refrigerator connected to the source of power by connection to the first power supply outlet;

a second power supply outlet connected to the source of power through the control processor, the second power supply outlet adapted to receive an appliance having lower power requirements than power requirements of the refrigerator;

sensing components connected to sense current demanded at the second power supply outlet, and generating signals indicative thereof;

wherein the control processor is configured to enable or disable power to the microwave oven, the first power supply outlet and the second power supply outlet, according to an algorithm in the control processor, and wherein the algorithm causes the control processor to:

disable the refrigerator and the second power supply outlet, when the microwave oven demands power; and

enable the second power supply outlet when the microwave oven is off; and

wherein the microwave oven includes a rear portion, wherein the rear portion includes the second power supply outlet.

12. The system according to claim **11** wherein the control processor further disables the second power supply outlet

when the sensing components signals indicate current in excess of a predetermined limit.

13. The system according to claim **11**, wherein the control processor starts a clock when the refrigerator is disabled and prevents the subsequent enabling of the refrigerator before the expiration of a predetermined time limit.

14. The system according to claim **11**, wherein the second power supply outlet further comprises at least two auxiliary outlets to provide power to charge battery operated electronic devices and the sensing components are connected to sense the current demanded at each of the auxiliary outlets.

15. The system according to claim **11**, wherein the sensing components further comprise a first current sensor connected to monitor the current in the first power supply outlet and a second current sensor to monitor the current in the second power supply outlet and wherein the control processor, in response to the first and second current sensors is configured to limit the combined current in the first and second power supply outlets to a predetermined value.

16. The system according to claim **11**, wherein the second power supply outlet further comprises at least two auxiliary outlets to provide power to charge battery operated electronic devices; and wherein the sensing components further comprise a first current sensor connected to monitor the current in the first power supply outlet and a second current sensor to monitor the combined circuit current in the at least two auxiliary outlets and wherein the control processor, in response to the first and second current sensors is configured to limit the combined current in the first and second power supply outlets to a predetermined value.

17. A system of linked appliances comprising:

a microwave oven connected to a source of power and having a control processor for controlling the operation of the microwave oven;

a first power supply outlet;

a refrigerator connected to the source of power by connection to the first power supply outlet;

a second power supply outlet connected to the source of power through the control processor;

sensing components connected to sense current demanded at the second power supply outlet, and generating signals indicative thereof;

wherein the control processor is configured to enable or disable power to the microwave oven, the first power supply outlet and the second power supply outlet, according to an algorithm in the control processor, and wherein the algorithm causes the control processor to:

disable the refrigerator and the second power supply outlet, when the microwave oven demands power; and

wherein the control processor is configured to disable the second power supply outlet when the refrigerator is operated during compressor startup.

18. The system according to claim **17**, wherein the first power supply outlet is provided on the microwave oven.

19. The system according to claim **17**, wherein the second power supply outlet is adapted to receive an appliance having lower power requirements than power requirements of the refrigerator.

20. The system according to claim **17**, wherein the algorithm causes the control processor to enable the second power supply outlet when the microwave oven is off.

* * * * *