UNITED STATES PATENT AND TRADEMARK OFFICE

_____

BEFORE THE PATENT TRIAL AND APPEAL BOARD

_____

COLLEGE PRODUCTS, INC.
Petitioner,

v.

INTIRION CORPORATION
Patent Owner

_____

Case IPR2023-01042
Patent No. 11,274,876

_____

PETITION FOR INTER PARTES REVIEW

Table of Contents

I. MANDATORY NOTICES (37 C.F.R. §42.8) 1
A. Real Parties-in-Interest (37 C.F.R. §42.8(b)(1)) 1
B. Related Matters (37 C.F.R. §42.8(b)(2)) 1
C. Lead and Backup Counsel (37 C.F.R. §42.8(b)(3)) 2
D. Service Information (37 C.F.R. §42.8(b)(4)) 2
E. Payment of Fees (37 C.F.R. §42.103) 2
II. COMPLIANCE WITH REQUIREMENTS FOR INTER PARTES PETITION PURSUANT TO 37 C.F.R. §§42.101 & 42.104(A) 3
III. SUMMARY OF THE ARGUMENT 7
IV. U.S. PATENT NO. 11,274,876 8
A. Effective Filing Date is my No Earlier than April 25, 2014 8
B. Specification 10
C. Prosecution History 13
D. The Claims 14
V. CHALLENGE AND RELIEF REQUESTED (37 C.F.R. §42.104(B)) 14
A. Challenged Claims, Specific Art, and Statutory Grounds (§42.104(b)(1), (b)(2)) 14
B. Claim Construction 15
1. "Level / Amount" 15
C. Unpatentability (§42.104(b)(4)) 16
D. Supporting Evidence (§42.104(b)(5)) 16
VI. THE CHALLENGED CLAIMS ARE UNPATENTABLE 16
A. The Level of Ordinary Skill in the Art 16
B. The Scope and Content of the Prior Art 17
1. The Prior Art is Analogous 17
2. The Prior Art References 18
C. Differences Between the Claimed Subject Matter and the Prior Art 26
1. The Prior Art References Teach All Elements of the Challenged Claims. 26

1. Explanation of Asserted Grounds and Rationales Supporting a Conclusion of Obviousness 55

A. Objective Indicia of Nonobviousness do not weigh in favor of Patentability 67

VII. CONCLUSION 68

EXHIBIT LIST

Exhibit No.	Description
1001	U.S. Patent No. 11,274,876
1002	Expert Declaration
1003	Prosecution File History, U.S. Patent No. 11,274,876
1004	Original Intirion Complaint Filed on June 8, 2022.
1005	College Products Motion to Dismiss for Improper Venue filed on September 27, 2022.
1006	Order Transferring case to Iowa filed on April 10, 2023.
1007	Email Admitting that Petitioner possess Compulsory Counter claims dated May 3, 2022.
1008	U.S. Application No. 14/262,290 ("the '290 Application"), published as U.S. Publication 2014/0251982.
1009	Exemplary embodiment Claim chart 1 sent by Intirion
1010	Email where Patent Owner construes certain terms
1011	U.S. Application No. 12/317,632 ("the '632 Application") published as U.S Publication U.S. Pub. 2009/0188911 ("Emma")
1012	"ISDU: Integrated Smoke detector Unit for Commercial Microwave Ovens", Cory Lloyd *et. al*, Northeastern University (2007). ("ISDU")
1013	RESERVED
1014	U.S. Patent No. 4,496,817 to Smith ("Smith")
1015	U.S. Patent No. 8,446,048 to Butt ("Butt")

Exhibit No.	Description
1016	Redline Comparison between 290 and Emma
1017	Iowa DJ Complaint
1018	Consolidation Order
1019	Summons return of service, dated June 8, 2022

College Products, Inc. ("College Products" or "Petitioner") respectfully requests *Inter Partes* Review of claims 1, 21, 26 and 28 ("Challenged Claims") of U.S. Patent No. 11,274,876 ("the '876 Patent") pursuant to 35 U.S.C. §311 and 37 C.F.R. §42.100.

I. MANDATORY NOTICES (37 C.F.R. §42.8)

A. Real Parties-in-Interest (37 C.F.R. §42.8(b)(1))

College Products is the real party-in-interest for this proceeding.

B. Related Matters (37 C.F.R. §42.8(b)(2))

Petitioner is aware of the following judicial or administrative matters that would affect, or be affected by, a decision pending in this proceeding:

- *College Products, Inc. v. Intirion Corporation*, 5:23-cv-04002-KEM (N.D. Iowa) ("Iowa DJ Case");
- *Intirion Corporation v. College Products, Inc.*, 5:23-cv-04023-KEM (N.D. Iowa) ("Iowa Transfer Case").

Concurrently with this Petition, Petitioner has also filed petitions for IPR for U.S. Patent 9,791,206 (IPR2023-01041) and U.S. Patent 10,495,374, which are related to the '876 Patent. For efficiency, Petitioner requests the three related IPR petitions be consolidated into one proceeding. [1]

---

[1] A single expert declaration is provided for all three petitions because of the substantial overlap.

C. Lead and Backup Counsel (37 C.F.R. §42.8(b)(3))

Lead Counsel	Domingo M. LLagostera (Reg. No. 70,684) BLANK ROME LLP 717 Texas Avenue, Suite 1400 Houston, TX 77002 Tel.:(713) 632-8682 / Fax:(713) 228-6605 domingo.llagostera@blankrome.com
Backup Counsel	Russell T. Wong (Reg. No. 32,322) BLANK ROME LLP 717 Texas Ave, Suite 1400 Houston, TX 77002 Tel.:(713) 632-8634 / Fax:(713) 228-6605 russell.wong@blankrome.com
Backup Counsel	Megan R. Wood (Reg. No. 72,367) BLANK ROME LLP 1825 Eye Street NW Washington D.C. 20006 Tel.:(202) 420-2753 / Fax:(202) 420-2201 megan.wood@blankrome.com
Backup Counsel	Alexander S. Perry (Reg. No. 68,030) BLANK ROME LLP 1825 Eye Street NW Washington D.C. 20006 Tel.:(202) 420-3115 / Fax:(202) 420-2201 alex.perry@blankrome.com

D. Service Information (37 C.F.R. §42.8(b)(4))

Please direct all correspondence to lead counsel and backup counsel at the addresses shown above. Petitioner consents to electronic service by e-mail, provided that all counsel for Petitioner are copied at the foregoing email addresses.

E. Payment of Fees (37 C.F.R. §42.103)

The undersigned authorizes the Commissioner to charge the fee specified by

37 C.F.R. §42.15(a) to Blank Rome LLP Deposit Account No. 23-2185, referencing attorney docket number 163456-00106. In addition, the undersigned representative authorizes the Commissioner to charge any additional fees which may be required, or credit any overpayment, to that deposit account.

II. COMPLIANCE WITH REQUIREMENTS FOR INTER PARTES PETITION PURSUANT TO 37 C.F.R. §§42.101 & 42.104(A)

Petitioner certifies that the '876 Patent is available for *inter partes* review; and (2) Petitioner is not barred or estopped from requesting *inter partes* review of any of the challenged claims on the grounds identified herein.

Under 35 U.S.C. §315(a)(1) an IPR may not be instituted if petitioner filed a "civil action challenging the validity of a claim of the patent." However, "[a] ***counterclaim*** challenging the validity of a claim of a patent does not constitute a civil action challenging the validity of a claim." 35 U.S.C. §315(a)(3) (emphasis added).

Petitioner filed the Iowa DJ Case, seeking declaratory judgment that the '876 Patent is invalid. For the reasons explained in detail below, Petitioner contends the statutory bar under §315(a)(1) does not apply to the Iowa DJ Case because the invalidity counts in that action are counterclaims of invalidity under 35 U.S.C. 315(a)(3).

On May 6, 2022, Patent Owner sued for patent infringement *Intirion Corporation v. College Products, Inc.*, No. 6:22-cv-00459-ADA (W.D. Tex.) ("the

Texas Affirmative Case"), alleging that Petitioner infringes the '876 Patent and U.S. Patent Nos. 9,657,974, 9,791,206, and 10,495,374 (collectively, "the Asserted Patents"). Ex. 1004. Patent Owner served the complaint on Petitioner on June 8, 2022. Ex. 1019 at 3. As recognized by Patent Owner, Petitioner had compulsory counterclaims of non-infringement and invalidity in that case. Ex. 1007 at 3. Petitioner did not file those counterclaims in the Texas Affirmative Case because that venue was improper under the patent venue statute, 28 U.S.C. §1400(b). Under that statute, a Federal District is a proper venue for a patent case only if the alleged infringer is incorporated in the District or has a ***physical*** place of business in that District. *In re Cray Inc.*, 871 F.3d 1355, 1360–63 (Fed. Cir. 2017). College Products is incorporated in Iowa. It is a small business in Sioux City, Iowa, with less than 10 employees. College Products has never had a physical place of business, employees, or equipment stored in the Western District of Texas. As the Western District of Texas was clearly an improper venue for Patent Owner's lawsuit, Petitioner filed a Motion to Dismiss for Improper Venue. Ex. 1005.

Petitioner filed its compulsory counterclaims of non-infringement and invalidity in the Iowa DJ Case to preserve its right in a proper venue to adjudicate its counterclaims responsive to Patent owner's patent infringement claims. That was the only proper venue for Intirion's patent claims against Petitioner. The complaint in the Iowa DJ Case states that Patent Owner's Texas Affirmative Case was filed in

an improper venue and identifies its declaratory judgment requests as responsive to Patent Owner's allegations in the Texas Affirmative Case. Ex. 1016. Indeed, Petitioner only filed counterclaims of invalidity against patents Intirion already asserted against it in the Texas Affirmative Case. Ex. 1007.

Subsequently, on April 10, 2023, the Honorable Judge Alan Albright heard Petitioner's Motion to Dismiss for Improper Venue, held venue was improper, and found all of Patent Owner's reasons for filing in that court irrelevant, unpersuasive, and unconvincing. *See generally* Ex. 1006. At Patent Owner's request, Judge Albright transferred the Texas Affirmative Action to the Northern District of Iowa, resulting in the Iowa Transfer Case. ("Iowa Transfer Case"). *Id.*

On May 3, 2023, Patent Owner moved the Iowa court to consolidate the Iowa DJ Action into the Iowa Transfer Case so the parties could be aligned as they were in the Texas Affirmative Case, with Patent Owner being plaintiff. Patent Owner justified consolidation as follows:

- "[Patent Owner] filed its action first, in the Western District of Texas"
- "The primary purpose of this litigation is [Patent Owner's] claims of patent infringement, and *[Petitioner's] claims are properly characterized as defenses and counterclaims.*"
- "[Patent Owner] has asserted that [Petitioner] infringes [Patent Owner's] patents—[Petitioner'] claims (which are not adequately pled)

can only be determined by resolving the issue of infringement."

- "Consolidation into *[Patent Owner's] affirmative case*, Case No. 23-CV-04023, would ensure *proper alignment of the parties and is consistent with the primary purpose of this litigation*."
- "[Petitioner] did not file its Declaratory Judgment Action until eight months after [Patent Owner] had filed its Affirmative Infringement Action. Pursuant to the first-to-file rule, Intirion's affirmative case should continue."
- "Proceeding in [Patent Owner's] affirmative infringement case, Case No. 23-CV-04023, will streamline the issues and allow the case to move forward in the 'traditional' manner, *i.e.*, with the party bearing the burden on infringement as the plaintiff, and the party defending infringement as the defendant."

Ex. 1007 (emphasis added).

College Products agreed to consolidate the Iowa DJ Action into the Iowa Transfer Case. On June 7, 2023, the Court granted the parties' motion to consolidate and consolidated the Iowa DJ Action into the Iowa Transfer Case, with Patent Owner being plaintiff, on June 7, 2023. Ex. 1018.

Both Petitioner and Patent Owner understood and acknowledged that Petitioner's claims in the Iowa DJ Case were "properly characterized

as…counterclaims" of invalidity and infringement. If Patent Owner tries to argue otherwise, it should be precluded from taking an inconsistent position before the Patent Office. Namely, Patent Owner should be precluded from arguing in this IPR that Petitioner's claims are not counterclaims, when it argued to the Iowa court that the claims are "properly characterized as…counterclaims" to have the Iowa DJ Case consolidated into the Iowa Transfer Case. Ex. 1007. That is appropriate because after consolidation, the parties are aligned as they were in the Texas Affirmative Case. Petitioner's defenses are properly characterized as counterclaims to Patent Owner's claims. Accordingly, those counterclaims fall within the exception under 35 U.S.C. §315(a)(3).

Further, this Petition is being filed within one year of service of a complaint against Petitioner in the Texas Affirmative Case. *See* Ex. 1019 at 3.

For the foregoing reasons, Petitioner is not barred or estopped from requesting *inter partes* review of any of the challenged claims on the grounds identified herein.

Concurrently, Petitioner is filing a Power of Attorney pursuant to 37 C.F.R. §42.10(b). Proof of Service of this petition pursuant to §§42.6(e) and 42.105(a) is provided in the attached certificate of service.

III. SUMMARY OF THE ARGUMENT

The most critical prior art reference to the '876 Patent is its parent application, Emma. The Examiner did not consider Emma during prosecution, perhaps because

it did not appreciate that although Emma is the parent, it is prior art. Emma discloses all the features of the microwave-refrigerator appliance recited in the Challenged Claims, with the exception of a smoke sensor and its functionality.

Smoke sensors were used in microwaves decades before the '876 Patent's priority date. Multiple prior art references discussed herein that were not considered by the Examiner disclose smoke sensors in microwaves, including re-enabling the microwave after a smoke sensor shutdown. That includes ISDU and Smith. Had the Examiner considered Emma as prior art and considered microwave smoke sensing references like ISDU and Smith, the Challenged Claims would likely not have been allowed. As discussed below, all challenged claims of the '876 Patent are unpatentable in view of Emma, a combined microwave-refrigerator, combined with ISDU, Smith, or Butt, which describe resettable smoke sensor shutdown of microwaves.

IV. U.S. PATENT NO. 11,274,876

The technology of the '876 patent relates, generally to a microwave oven and refrigerator combination that includes a smoke sensor. Ex. 1002 ¶[53], ¶[64].

A. Effective Filing Date is my No Earlier than April 25, 2014

The '876 Patent, entitled "Multiple Linked Appliance with Auxiliary Outlet," was filed as application no. 16/671,383 on November 1, 2019. Ex. 1001 at (21), (22), (54). The '876 Patent claims priority as a continuation-in-part ("CIP") to U.S.

Application No. 14/262,290 ("the '290 Application"), which was filed on April 25, 2014, and published as U.S. Pub. 2014/0251982. *Id.* at (63); Ex. 1008. The '290 Application claims priority as a CIP to U.S. Application No. 12/317,632 ("the '632 Application"), which was filed on December 23, 2008, and published as U.S. Pub. 2009/0188911 ("Emma"). Ex. 1008 at (63); Ex. 1011 at (10), (21), (22). As explained below, none of the Challenged Claims are entitled to claim priority to the Emma filing date.

As shown in Section VI.C.1 below, each of the Challenged Claims contain at least the following basic elements: Microwave Oven, Refrigerator, Control Circuit, and, Smoke Sensor, where the smoke sensor is configured to (i) supply a Shutdown Function to the microwave oven and (ii) provide a Reset Enable Function so that the microwave oven may be turned back on[2]. As shown in the attached redline comparison of Emma and the '290 Application, a smoke sensor was first mentioned in the '290 Application. *See* Ex. 1016, Ex. 1011 ¶[0055]. As that element and others were not disclosed in Emma, the Challenged Claims cannot claim priority to Emma. The earliest possible priority date for the Challenged Claims is the filing date of the '290 Application, or April 25, 2014.

---

[2] Capitalized terms refer to elements of the Challenged Claims as shown in the Listing of the Challenged Claims, attached as Petition Appendix A.

For purposes of this petition, Petitioner assumes that April 25, 2014 is the earliest priority date of the ’876 Patent. However, Petitioner is not conceding the Challenged Claims are entitled to that priority date. Petitioner reserves the right to contest in the parallel litigation proceedings that the Challenged Claims are not enabled by the ’290 Application.

B. Specification

The ’876 Patent is directed to a microwave oven and refrigerator combination that includes a smoke sensor. As discussed below in Section VI.C.1.b, Emma, the parent patent and prior art to the ’876 Patent, discloses a microwave oven and refrigerator combination, as shown in Figures 1 and 2 below, with auxiliary power receptacles and an electrical control scheme to prevent the combination from overloading. Ex. 1011 at Figs. 1-2; Ex. 1002 ¶[64].

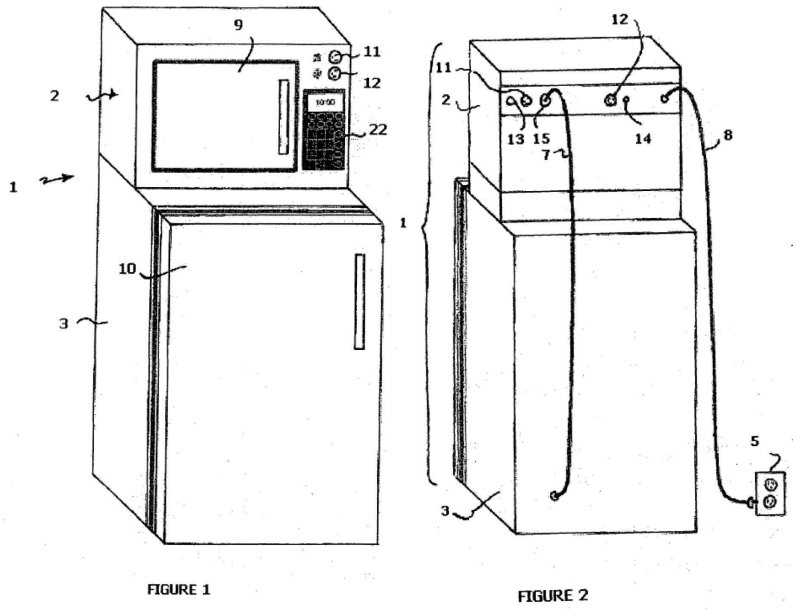

Emma generally describes a system where power to the refrigerator and auxiliary receptacle is cut off when the microwave is turned on. When the microwave is turned off, power is restored to those components. Emma states: "a combination microwave and refrigerator System is constructed having a single plug input supply. Ex. 1011 at Abstract. "The microwave oven is adapted to provide power to a refrigerator, and to auxiliary receptacles … a microprocessor controller adapted to monitor operation of the refrigerator compressor and controls the power to the microwave magnetron and other components." *Id.*, ¶[0008]. Moreover, as part of the device's electrical control scheme, power to both the refrigerator and the auxiliary power receptacles are disabled when the microwave demands cooking power. Emma states: "When power to the microwave is demanded, the compressor is disabled for a preset minimum period. When microwave demand ceases, refrigerator power is restored…The control model is adapted to disable the power to the auxiliary receptacles, if the microwave is in operation." *Id.*, ¶[0011-12]; Ex. 1002 ¶[65].

Emma Figure 4 (below) shows a control circuit with the microwave controller 4 electrically controlling relays 19 and 20 for cycling power to refrigerator receptacle 15 and the auxiliary outlets 11 and 12:

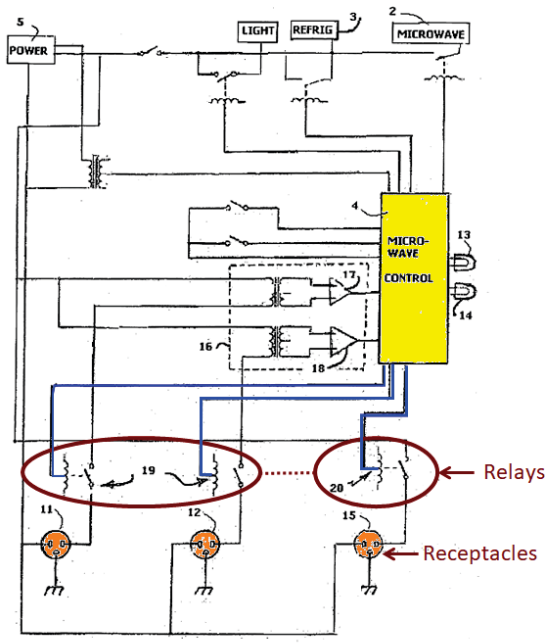

FIGURE 4

Id. at Fig. 4 (annotated); Ex. 1002 ¶[66].

The ’876 Patent includes the same microwave-refrigerator combination as Emma but adds a smoke sensor that can send a signal to shut down the microwave oven if smoke is detected and where the microwave is enabled to receive cooking power following the shutdown. Ex. 1001. “[A] safety sensor… such as a smoke or gas sensor may be provided in the microwave oven 2. The smoke sensor 226 operates . . . to turn off the microwave oven upon sensing smoke or polluted air indicative of a potentially dangerous condition…” *Id.* at 14:12-18. “The alcohol/[smoke] sensor 226 may be reset automatically responsive to the alcohol sensor 226 no longer detecting gas indicative of the dangerous condition. Alternatively, or in addition, the alcohol sensor 226 may be reset upon a sensor sensing opening of the door 9 of the microwave oven 2.” *Id.* at 15:23-28; Ex. 1002

¶[67].

C. Prosecution History

The application for the'876 Patent was filed on November 1, 2019. Ex. 1003. It included 28 claims. *Id.* In the following discussion, the as-filed claim numbers are referenced first, followed by their as-issued claim numbers in brackets (if applicable).

The Examiner issued a non-final rejection on July 7, 2021. Ex. 1003. The Examiner rejected original independent claims 1and 21 as being unpatentable over U.S. Patent No. 5,521,359 to Bone in view of Japanese Patent No. 5-240447 to Ando, because Bone discloses a microwave-refrigerator combination where power is selectively delivered to the microwave and refrigerator, and Ando discloses using sensors in a microwave to sense smoke and disable the microwave if the smoke has reached a threshold level. *Id.* at 135-137.

The applicant filed a response to the rejection on July 28, 2021. The applicant argued the originally filed claims should be allowed because Ando does not teach "at least one control circuit is operative to reset and enable the microwave oven to receive cooking power in a next subsequent cooking session...The fact that Ando detects the inside of his microwave has caught fire which may have damaged the device, makes clear that Ando has no reason to reset the safety circuit so that the microwave can be operated again. This is particularly true as a fire may have caused

damage to the microwave oven which could result in the release of radiation or other undesirable and potentially harmful conditions." *Id.* at 303.

The Examiner issued a notice of allowability on November 9, 2021. *Id.* at 238. The Examiner stated in his reasons for allowance that he found the arguments over the prior art as persuasive. *Id.* at 244.

D. The Claims

The '876 Patent has 28 claims, with claims 1, 12, and 21 being independent. Ex. 1001 at claims 1-28. Only independent claims 1 and 21 (the "Independent Claims") are part of the Challenged Claims. The Challenged Claims can be found in the listing of the claims attached as Petition Appendix A. In the listing of the claims, Petitioner provides descriptors for the claim elements, which are used throughout this petition.

V. CHALLENGE AND RELIEF REQUESTED (37 C.F.R. §42.104(B))

A. Challenged Claims, Specific Art, and Statutory Grounds (§42.104(b)(1), (b)(2))

Petitioner requests institution of trial and cancellation of the Challenged Claims (i.e., claims 1, 21, 26 and 28) of the '876 Patent. The specific grounds for each Challenged Claim are summarized as follows:

Ground 1: Claims 1, 21, 26 and 28 are obvious under 35 U.S.C. §103 in view of Emma combined with ISDU;

Ground 2: Claims 1, 21, 26 and 28 are obvious under 35 U.S.C. §103 in view

of Emma combined with Smith;

Grounds 3 and 4: Claims 1, 21, 26 and 28 are obvious under 35 U.S.C. §103 in view of Emma combined with Butt and/or alternatively obvious under 35 U.S.C. §103 in view of Emma combined with Butt and Smith;

B. Claim Construction

Petitioner does not believe any claim term requires a construction to find the Challenged Claims invalid for the reasons provided in this Petition.[3] Ex. 1002 ¶[116]. However, as explained below, Petitioner applies Patent Owner's interpretations of one claim term to avoid unnecessary arguments regarding claim construction. The Challenged Claims are invalid even using Patent Owner's constructions. *Id.*, ¶[125]

1. "Level / Amount"

As shown above in Section IV.D, claims 1 and [21] recite: "responsive at least in part to a level [an amount] of smoke sensed by the smoke sensor." Ex. 1001 at claims 1, 21. In its infringement contentions, Patent Owner interprets "level of smoke" and "amount of smoke" as merely detecting smoke. Ex. 1009 at 6. Petitioner applies what it understands Patent Owner contends is the meaning of this

[3] Petitioner reserves all rights to raise claim construction and other arguments, including challenges under 35 U.S.C. §§101 or 112, in district court as relevant to those proceedings. *See, e.g., Target Corp. v. Proxicom Wireless, LLC*, IPR2020-00904, Paper 11 at 11-13 (P.T.A.B. Nov. 10, 2020).

term in this Petition and shows below the claims are invalid under Patent Owner's construction. However, Petitioner does not adopt Patent Owner's construction and reserves all rights to contest Patent Owner's construction in the related litigation proceedings, including that this term is indefinite. Ex. 1002 ¶[126].

C. Unpatentability (§42.104(b)(4))

The Challenged Claims are unpatentable as detailed in Sections VI.

D. Supporting Evidence (§42.104(b)(5))

Petitioner's exhibits are filed herewith. The relevance of the evidence, including identification of specific evidence that support this challenge is found in Sections VI.A–VI.C. Petitioner submits the declaration of Mark N. Horenstein (Ex. 1002) in support of this Petition pursuant to 37 C.F.R. §1.68.

VI. THE CHALLENGED CLAIMS ARE UNPATENTABLE

A. The Level of Ordinary Skill in the Art

In this case, a POSITA would have had at least a bachelor's degree in electrical engineering or computer engineering. Ex. 1002 ¶[50]. Alternatively, a POSITA could have had a bachelor's degree in mechanical engineering, industrial engineering, physics, or a related engineering or discipline, plus at least two years of experience working with control circuits, sensors, kitchen appliances, or similar fields. *Id.*

B. The Scope and Content of the Prior Art

1. The Prior Art is Analogous

A POSITA would understand the field of the invention to be electrical kitchen appliances including refrigeration and cooking appliances, including the control circuit to enable functions. *Id.*, ¶[48]. For example, the '876 Patent describes the field as "improvements to appliances that include compact refrigerators and microwave oven functionality" Ex. 1001 at 1:8-9. The Technical Field section of the '876 Patent states: "Exemplary embodiments relate to improvements to appliances … that include compact refrigerator and microwave oven functionality." *Id.* at 1:6-9. Similarly, the Background and Summary sections: "Compact refrigerators and associated appliances may benefit from improvements," and "In one exemplary embodiment, an appliance apparatus is provided that includes a microwave oven," respectively. *Id.* at 1:21-22, 1:26-27.

As shown below, all of the references relied on herein are from this exact same field i.e., electrical kitchen appliances, qualifying them as analogous prior art. Ex. 1002, ¶[95]. Moreover, all of the references are directed to the same type of subject matter as in the '876 Patent. *Id.* Each reference relates to using logic circuitry in a microwave-refrigerator combination to shut power to the microwave when the refrigerator is in use (e.g., Emma) or relates to smoke or gas sensing in an electrical cooking appliance to shut down the appliance to prevent over cooking and/or

prevent a fire from accelerating (e.g., ISDU, Smith, and Butt). *Id.*

2. The Prior Art References

Emma, which the '876 Patent claims priority from, is a critical prior art reference to the Challenged Claims but was not referenced or cited by the Examiner as prior art. Emma is prior art because the Challenged Claims claim new matter not disclosed in Emma. *Supra* at §IV.A. The Examiner may not have appreciated Emma is prior art because it is the parent patent.

Prior art references ISDU, Smith, and Butt were not of record in the prosecution of the '876 Patent.

a. *Emma*

U.S. Patent Publication No. 2009/01889117 ("Emma") (Ex. 1011), entitled "Multiple Linked appliances with Auxiliary Outlet," published on July 30, 2009. Ex. 1011 at (43), (54). Emma is prior art pursuant to at least 35 U.S.C. §102(a)(1). As discussed above, Emma is a parent application to the '876 Patent and is prior art. *Supra* at §IV.A.

Emma is directed to a combination microwave refrigerator in which the refrigerator is plugged into an auxiliary outlet that is controlled by a control circuit adapted to open and close one or more power relays. Ex. 1011 at Abstract. The control circuit controls relays to supply or withdraw power to the refrigerator and/or other loads while the microwave is actively operating for the purpose of preventing

an overload condition on the supply circuit. *See id.*, ¶¶[0025-0027]; Ex. 1002, ¶[64].

As shown in Figure 2 (reproduced below), Emma discloses a microwave oven refrigerator combination in which the refrigerator connects to a receptacle 15 power supply outlet on the microwave oven with both appliances being powered by a single cord 8. Ex. 1011 ¶[0008]; Ex. 1002 ¶[111].

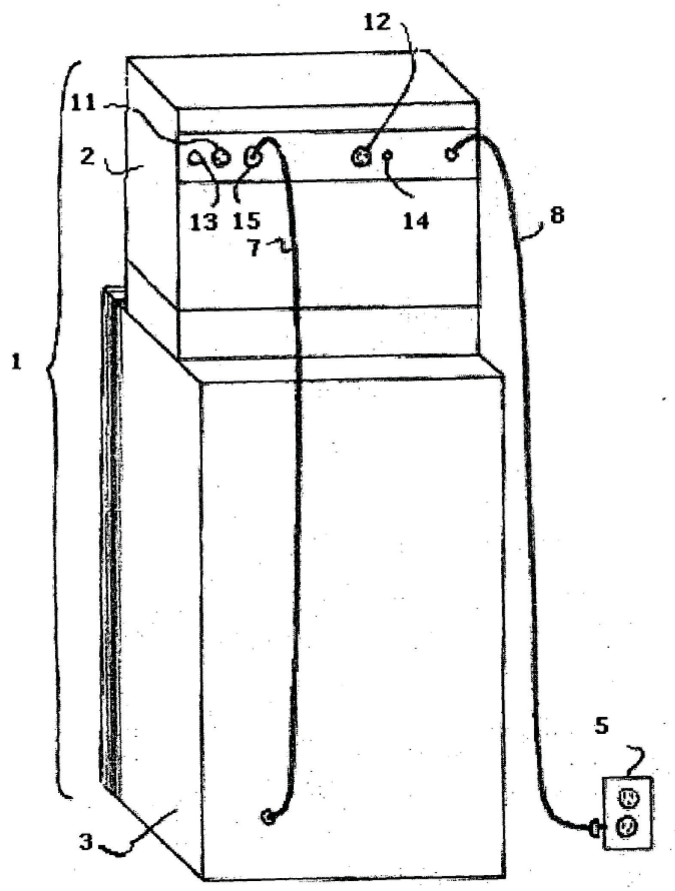

FIGURE 2

Ex. 1011 at Fig. 2.

Furthermore, the "microwave oven includes a microprocessor controller

adapted to monitor operation of the refrigerator compressor and controls the power to the microwave magnetron and other components." *Id.* at ¶[0026]; Ex. 1002 ¶[112].

As shown in the below diagram of the control circuit (Figure 4), Emma discloses a control circuit providing for digitally operating relays 19, 20 for controlling the receptacles 11, 12, and 15; Ex. 1002 ¶[113].

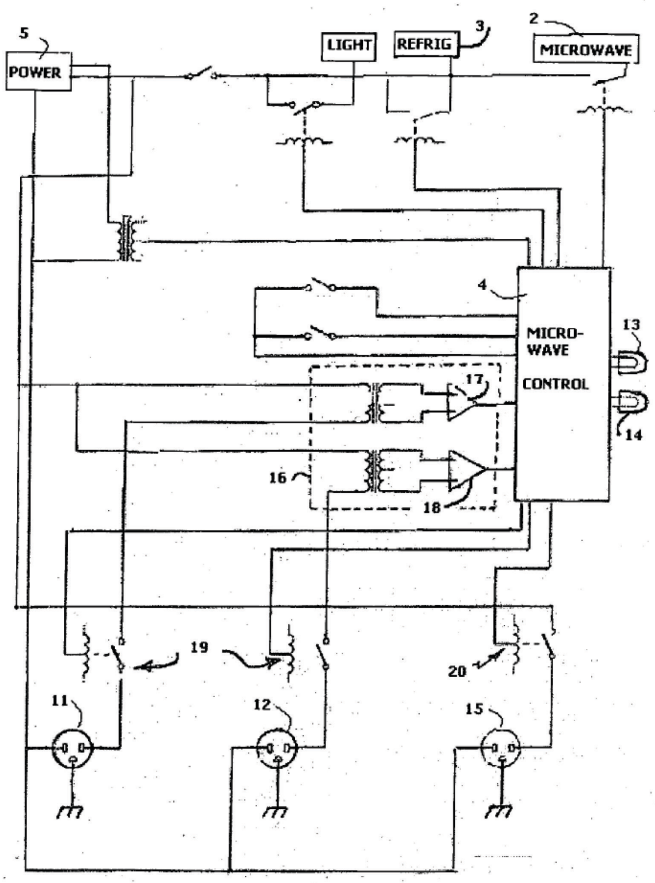

FIGURE 4

Ex. 1011 at Fig. 4.

Emma discloses "[t]he current demands of the microwave 2 are generally the

most significant contribution to overload….” *Id.*, ¶[0033]. As shown in Figure 6 (below), to avoid overload conditions, Emma discloses several control methods to disable and/or limit power to the refrigerator during microwave operation. *Id.*, ¶[0037]; Ex. 1002 ¶¶[114-15].

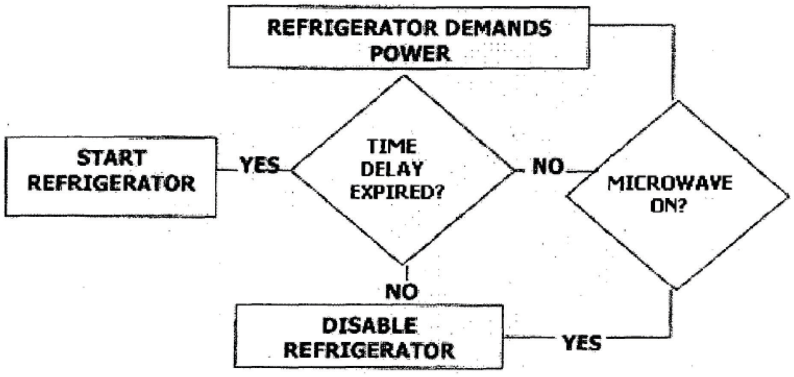

FIGURE 6

Ex. 1011 at Fig. 6. For example, when the refrigerator demands power, it will first check to see if the microwave is on. *Id.* If it is, it will not start. *Id.* If the microwave oven is not on and the time delay has expired (a method used in Emma to “prevent undesirabl[e] rapid on/off cycles”), the refrigerator may receive power. *Id.* at ¶[0030].

b. *ISDU*

ISDU: Integrated Smoke detector Unit for Commercial Microwave Ovens, Cory Lloyd *et. al*, Northeastern University (“ISDU”) published on April 17, 2007, on “IRis”. Ex. 1012. IRis was a “digital archive,” indexed on Google and readily

accessible worldwide, that allowed Northeastern University researchers, starting in 2006, to publish their work to "promote and preserve their intellectual output" and was a precursor to Northeastern University's more current Digital Repository Service. Ex. 1002, ¶[96-98]. Per IRis's publishing practices, ISDU was published and publicly available in Northeastern University's digital archive in 2007. *Id*. ISDU is prior art pursuant to at least 35 U.S.C. §102(a)(1). *See Id.,* ¶[98].

ISDU discloses, among other things: that "smoke detection devices be integrated into range ovens and microwaves … when smoke is detected during microwave operation, the device will temporarily disable microwave operation and let the user know that the food has begun to smoke or even burn." Ex 1012 at 1. Reproduced below is a diagram of ISDU's smoke detector circuit interface:

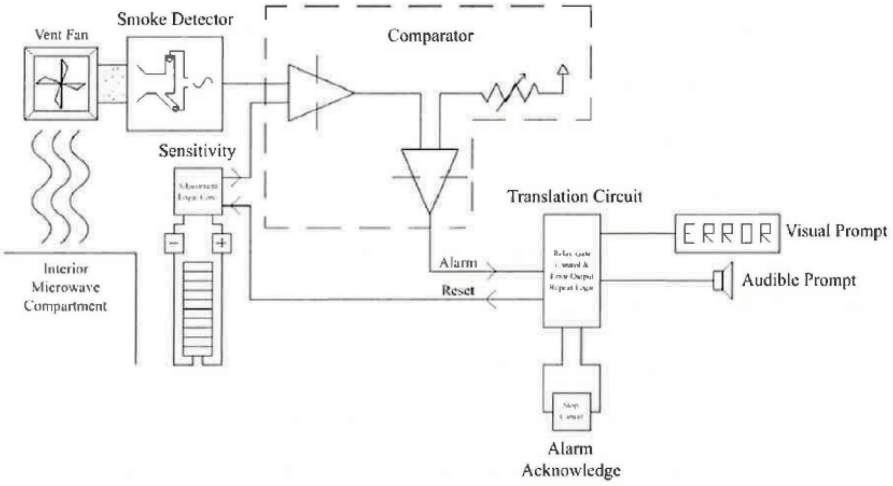

Figure 4

Id. at Fig. 4; Ex. 1002 ¶[99].

The microwave in the above diagram includes a vent fan, where air will flow

through to the smoke detector. If the detector reaches its predetermined condition, then a signal is sent to the translation circuit to shut down the microwave oven and emit an audible alarm, a visual prompt and waits for the user's acknowledgement:

> [O]nce smoke is detected, we will send a signal that lets a circuit interrupt the power to the microwave through the use of a 'soft' power-off function already in use by the microwave logic. This will stop the microwave while simultaneously sounding an alarm. After the alert, the user will be able to reset the microwave, change its sensitivity, or stop microwaving.

Id. at 6. "Acknowledgement of the alarm state will reinstate all normal microwave functions and reset the smoke detector circuit for further use." *Id.* at 8; Ex. 1002 ¶[100].

c. *Smith*

U.S. Patent No. 4,496,817 ("Smith") (Ex. 1014), entitled "Automatic Fire Detection for Microwave Oven," issued January 29, 1985. Ex. 1014 at [45], [54]. Smith is prior art pursuant to at least 35 U.S.C. §102(a)(1).

Smith discloses "a method and apparatus for anticipating the occurrence of a fire in the cooking cavity of a microwave oven." *Id.* at 1:55-57. Smith discloses that "before actually reaching the ignition point, the food begins to char, smoke or smolder" resulting in a period of "rapidly increasing gas concentration in the circulating air…." *Id.* at 3:51-56. As shown in Figure 2 (reproduced below), the oven

[10] in Smith has "a blower for continuously circulating air and a sensor [52] responsive to the concentration of gases in the circulating air." *Id.* at Abstract.

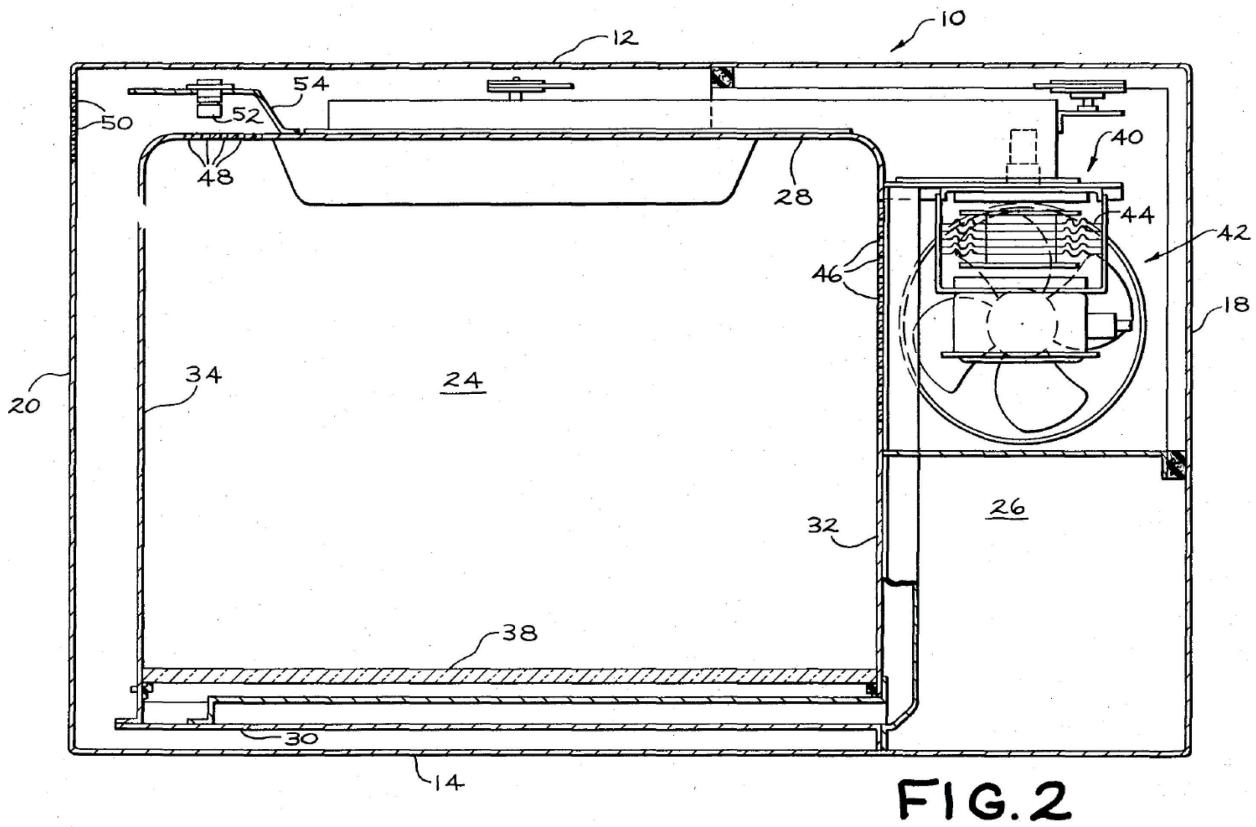

Id. at Fig. 2. Smith further discloses that "upon the detection of a characteristic rate of change indicative of the load being heated closely approaching its combustion point, power to the oven is turned off and indication is provided to the user that a combustion condition in the oven cavity is imminent." *Id.* at 1:57- 2:4; Ex. 1002 ¶[104].

d. *Butt*

U.S. Patent No. 8,446,048 ("Butt") (Ex. 1015), entitled "Controller for a safety shut-off system," issued May 21, 2013, based on application no. 12/733,212

filed on 04/29/2010, which was a national stage entry of PCT/CA2008/001462 filed on August 18, 2008. Ex. 1015 at (21), (22), (45), (54), (86). Butt is prior art pursuant to at least 35 U.S.C. §102(a)(1).

Butt discloses a safety shutoff for electrical kitchen appliances. *Id.* at 3:64-66. In particular, "a controller for interrupting a supply of electricity to an appliance upon detection of a trigger, such as Smoke." *Id.* at 1:16-18. Specifically, "[t]he trigger may be, for example, a signal from a hazard detector such as a smoke detector." *Id.* at 2:33-34. And the signal can be "transmitted… either wirelessly or using a wired connection." *Id.* at 2:51-52; Ex. 1002 ¶[106].

Figure 1B

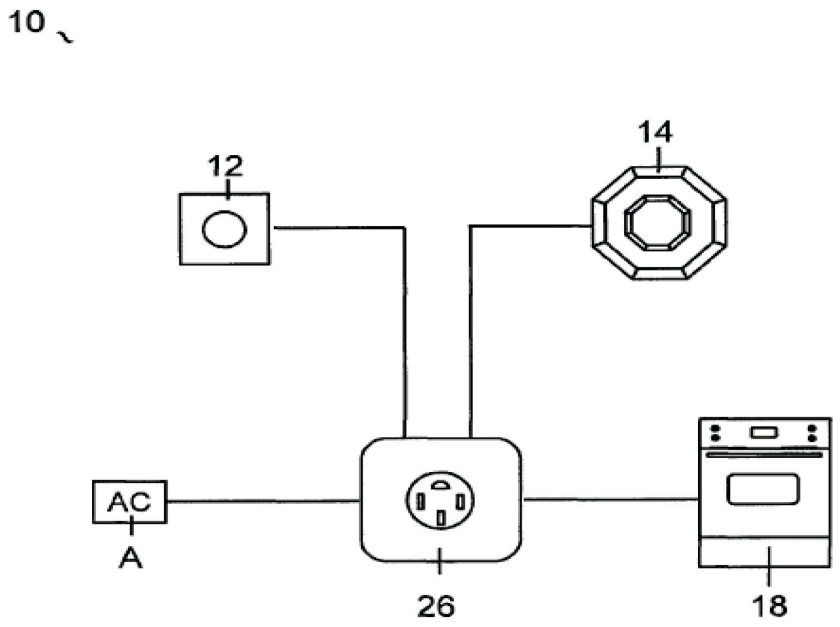

Ex. 1015 at Fig. 1B.

For example, as shown in Figure 1B (reproduced above), Butt discloses the system 10 may include a smoke detector 14 connected to a circuit box 26 housing a controller 20. "If the detector 14 detects the presence of smoke, then … signal 15 is transmitted and is received by the controller 20. Upon receiving the signal, the controller interrupts the AC power supply to the appliance 18 and consequently shuts the appliance 18 off." *Id.* at 4:53-58. As a result, "the energy that would otherwise act as an accelerant for the fire is eliminated, and the progress of the fire is slowed." *Id.* at 4:58-60; Ex. 1002 ¶[107].

Butt discloses a reset button 12 that re-enables the system for further use by checking for a smoke alarm system signal and then closing a relay to reconnect the electrical appliance to AC power. *See* Ex. 1015at 6:53-7:20; Ex. 1002 ¶[108].

C. Differences Between the Claimed Subject Matter and the Prior Art

1. <u>The Prior Art References Teach All Elements of the Challenged Claims.</u>

The teachings of the prior art references are mapped to each element of the Challenged Claims below. Due to the similarity of the claims, the analysis is organized by reference to the basic claim elements common to each of the Challenged Claims. However, where an element differs from the basic common element, that claim element is specifically analyzed.

a. ***The Independent Claims (Claim 1 and 21)***

i. *Microwave Oven*

(A) Emma

Emma discloses a microwave oven with an interior cooking area: "A system of linked appliances comprising: a microwave oven connected to a source of power." *See, e.g.*, Ex. 1011 at Claim 1. As shown below in Figure 2, the microwave oven 2 is connected to power source 5. *Id.*, ¶[0026]; Ex. 1002 ¶¶[138-39, 285].

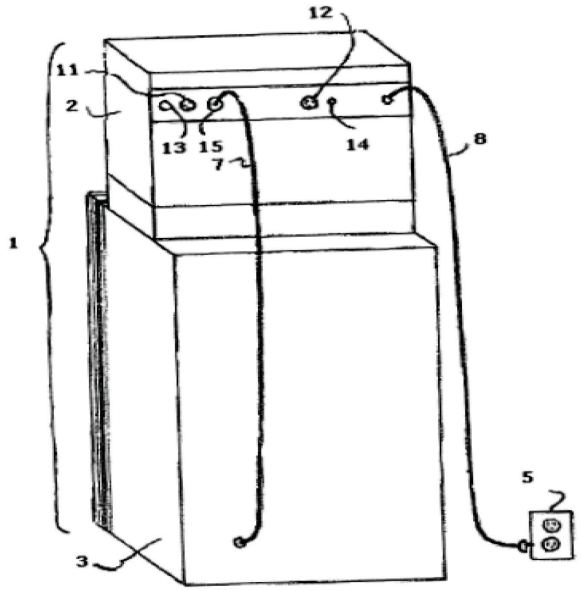

FIGURE 2

Additionally, Emma states: "The appliances (microwave and refrigerator) may be of standard design with features commonly available. The internal components of the appliances are well known and do not need to be described herein." Ex. 1011 ¶[0026]. It is inherent that the microwave oven contains an interior

cooking area for it to be a microwave oven. Ex. 1002 ¶[285].

ii. *Refrigerator*

(A) Emma

Emma discloses a refrigerator connected to the refrigerator receptacle, which is on the microwave oven and in operative electrical connection with a control circuit (i.e., "at least one electrical power control circuit"). It states: "a microwave oven…having a control processor for controlling the operation of the microwave oven; a first power supply outlet provided on the microwave oven; a refrigerator connected to the source of power by connection to the first power supply outlet...." Ex. 1011 at claim 1. As shown below in Figure 2, the "[r]efrigerator 3 is connected to microwave oven 2 by power cord 7 to refrigerator receptacle 15, shown at the rear of the microwave 2 in FIG. 2." *Id.* at ¶[0026]; Ex. 1002 ¶¶[138-39, 285, 287].

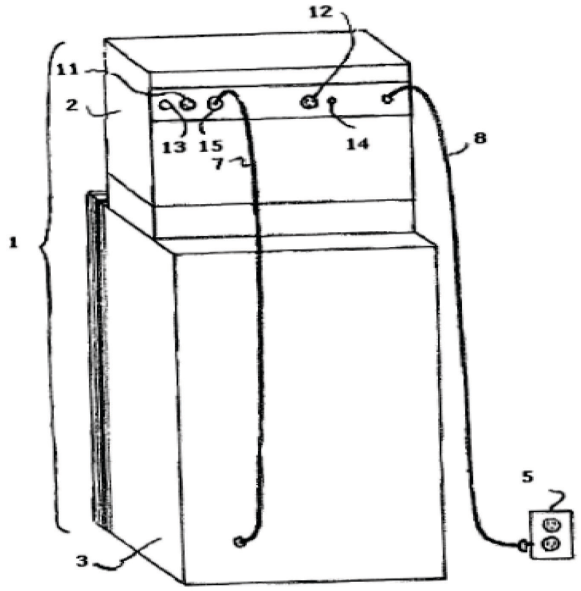

FIGURE 2

Additionally, when discussing the different components of the refrigerator (i.e., plurality of components), Emma states "[t]he appliances (microwave and refrigerator) may be of standard design with features commonly available. The internal components of the appliances are well known and do not need to be described herein." Ex. 1011¶[0026]. It would have been inherent that a refrigerator of this design would contain a plurality of electrically powered components based on this teaching, for example, at least an electrical compressor and a compressor fan. Ex. 1002 ¶[288]. Emma also discloses an electrical compressor: "When power to the microwave is demanded, the compressor is disabled for a preset minimum period." Ex. 1011 ¶[0011]. Emma further discloses a refrigerator temperature sensor

that may be used to monitor its status:

> Under some circumstances, it may be necessary to give the refrigerator priority to prevent an undesirable drop in temperature. In the latter instance, microcontroller can be coupled to the refrigerator temperature sensor to execute a time sequence during which the microwave will be disabled to allow the refrigerator to return to proper operating temperatures.

Id., ¶[0037]; Ex. 1002 ¶[288].

Emma Figure 10 (reproduced below) is a schematic diagram of a current sensor to monitor the current of the microwave refrigerator combination that shows an electrically powered light emitting diode "LED" labeled "Refrigerator" at control panel 122. Ex. 1011 ¶¶[0035-0036]. Emma Figure 11 (reproduced below) is a control panel 122 on the microwave oven to program the microwave oven's operation. *Id.*; Ex. 1002 ¶[288].

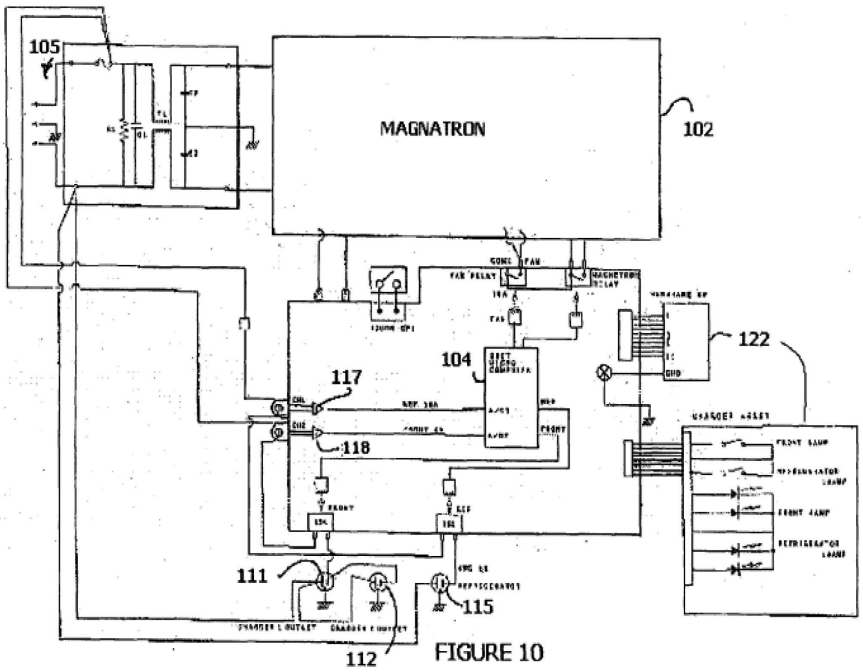

FIGURE 10

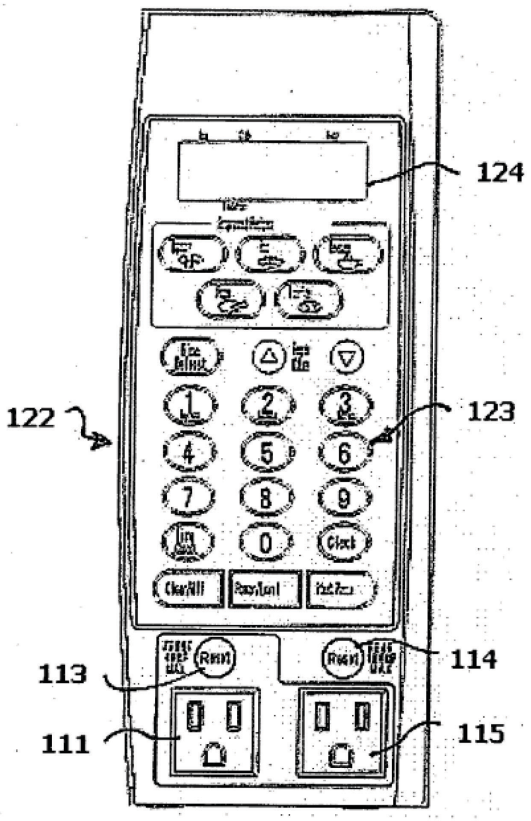

FIGURE 11

Ex. 1011 at Figs. 10-11. The refrigerator may use a LED indicator light to let the user know the status of its operation:

> Refrigerator outlet 115 is also shown to be accessible from the front panel [Figure 11 (above)] and is associated with an LED indicator and reset button 114. Similarly LED indicator 114 is controlled to be on during use of the refrigerator and to switch to a flashing mode when the microwave is operating.

Id., ¶[0036].

iii. *Control Circuit*

(A) Emma

As shown in Figure 2 (reproduced below), Emma discloses a microwave oven refrigerator combination with both appliances being powered by a single cord 8 being releasably connectable to a power outlet 5: a "single cord 8, provides input power to the system 1 from receptacle 5 through microwave 2." Ex. 1011 ¶[0008], ¶[0026].

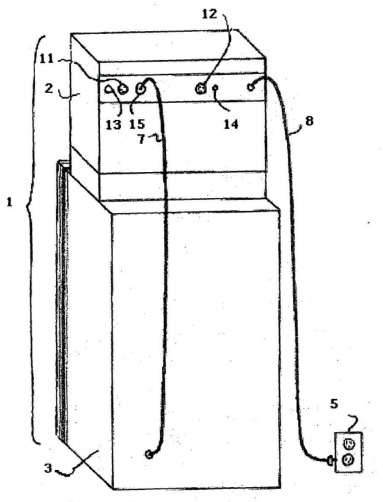

FIGURE 2

Emma further discloses a microprocessor-based control circuit (i.e., "at least one power control circuit") installed in the microwave oven that is in operative connection with the microwave oven and refrigerator and powered through a single power cord (i.e., "wherein the at least one power control circuit is supplied with electrical power only through the single power cord"). Specifically, Emma states in claim 1: "wherein the control processor is configured to enable or disable power to

the microwave oven, the first power supply outlet (the refrigerator's connection to the microwave oven) and the second power supply outlet, according to an algorithm in the control processor…." *Id.* at claim 1. Additionally, Figure 3 (reproduced below) contains a hierarchical block diagram of the system, specifically, the microprocessor and its distribution of power to the device made possible by power from the power supply (i.e., "single power cord"). Ex. 1002 ¶¶[149, 285]

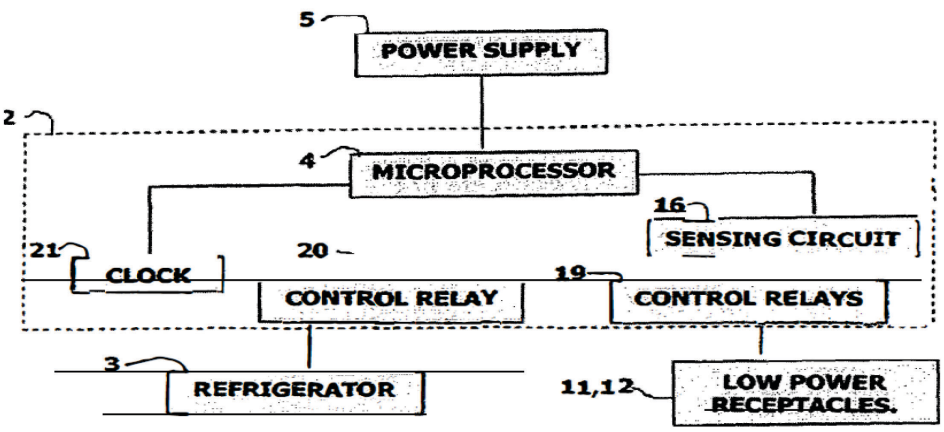

FIGURE 3

iv. *Smoke Sensor*

(A) ISDU

ISDU discloses a smoke sensor positioned in operative connection with the cooking area inside the microwave oven. As shown in FIG 4 (below), the smoke detector is inside the cooking area and in operative connection with the microwave oven through a vent fan. Ex. 1002 ¶¶[289-90].

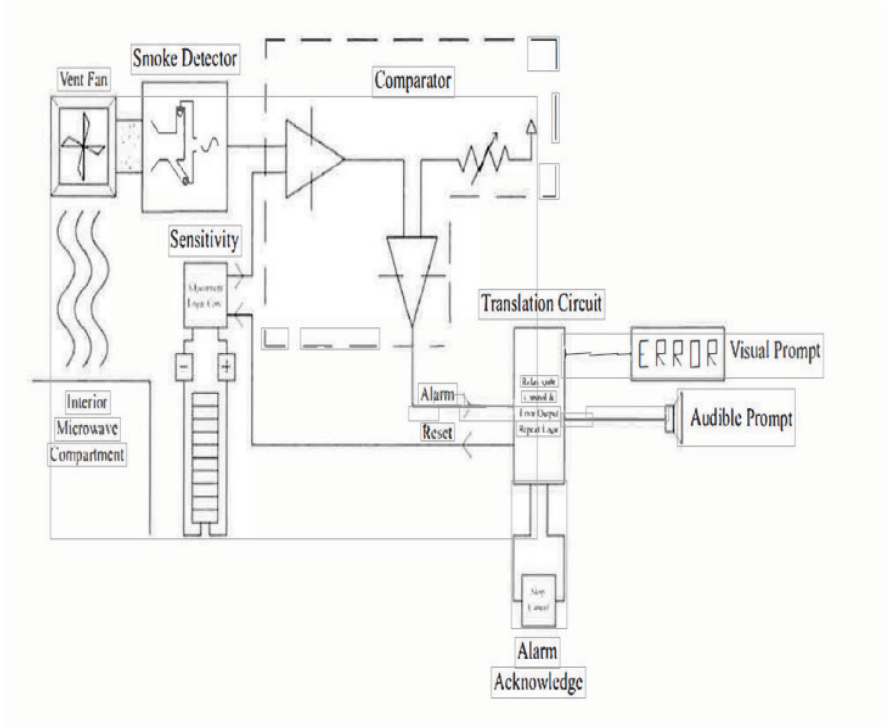

Figure 4

The smoke detection unit is also in operative connection with the circuit (i.e., "at least one power control circuit"). As explained by ISDU, the integrated smoke detection unit interfaces with the microwave logic to control shutting down the microwave and alert the user: "Once smoke is detected, we will send a signal that lets a circuit interrupt the power to the microwave through the use of a 'soft' power-off function already in use by the microwave logic. This will stop the microwave while simultaneously sounding an alarm." Ex. 1012 at 6; Ex. 1002 ¶¶[99-100, 289].

(B) Smith

Smith discloses a gas sensor (i.e., "smoke sensor") positioned in operative connection with a cooking area inside a microwave oven. Smith describes the need to detect smoke and increasing gas concentration prior to combustion: "However, before actually reaching the ignition point, the food begins to char, smoke or smolder, resulting in a second period of relatively rapidly increasing gas concentration in the circulating air, comparable to that rate of increase which characterizes the normal cooking period." *Id.* at 3:51-54. Referring to Figures 1 and 2 below, which are different angles of the microwave oven, Smith discloses a gas sensor 52 (i.e., "smoke sensor") positioned in operative connection with a cooking area inside the microwave oven:

> Means for sensing the concentration level of such gases in the air leaving the cavity is provided in the form of a gas sensor 52 disposed in the air flow path between perforations 48 in cavity wall 28 and vent openings 50 in cabinet wall 20 Sensor 52 is supported proximate perforations 48 by mounting bracket 54 which is suitably secured to cavity wall 28. Sensor 52 in the illustrative embodiment of FIG. 2 is a gas sensor readily commercially available from Figaro Engineering, Inc., identifiable as Model TGS No. [816][4].

Id. at 3:6-16; Ex. 1002 ¶¶[289-90].

---

[4] Ex. 1002 ¶¶[167-169] (discussing typographical error).

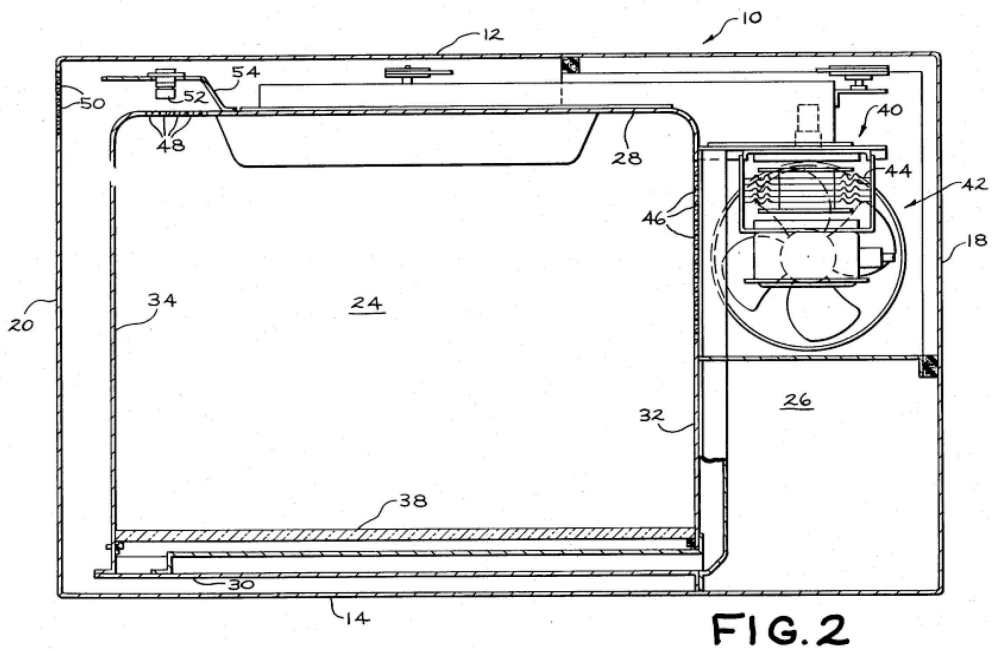

FIG. 2

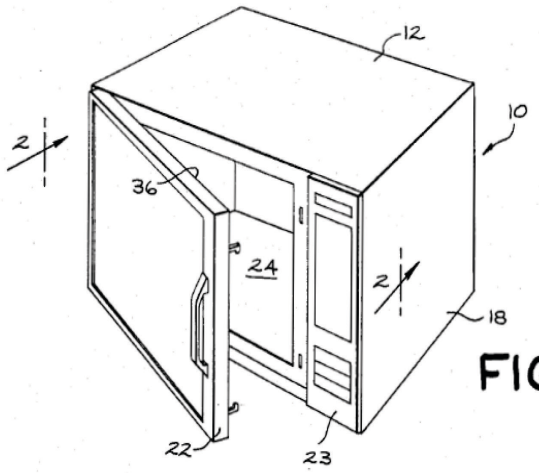

FIG. 1

The Model TGS No. 816 sensor from Figaro Engineering Inc. is a smoke sensor. Ex. 1002 ¶¶[167-69]. Additionally, referring to FIG. 4 (below), Smith discloses the gas sensor is in operative connection with the microwave microprocessor (i.e., "control circuit"):

> gas sensor 52 is incorporated in a microprocessor-based control arrangement . . . . The circuit of FIG. 4 includes a gas sensing circuit 60 for sensing the concentration level of gases in the circulating air as it exits cooking cavity 24 and generating a voltage signal having a magnitude representative of the sensed gas concentration level.

Ex. 1014 at 4:61-5:3; Ex. 1002 ¶¶[170, 289].

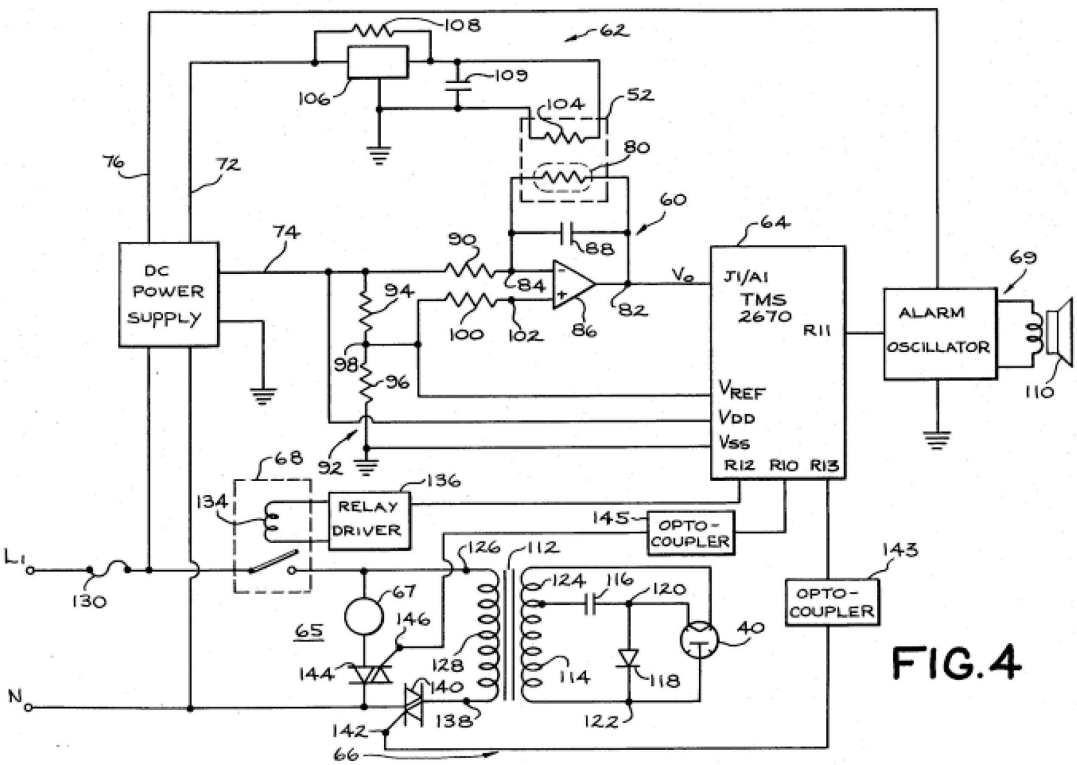

(C) Butt

Butt addresses the problem of fires caused by kitchen appliances: "[t]he National Fire Protection Association reports that between the years 1999-2002, for example, there were 114,000 reported home fires associated with cooking alone." Ex. 1015 at 1:22-25. As shown in Figure 1A (reproduced below), the system taught by Butt controls power to an electrical kitchen appliance 18 coupled to a controller

20, where the Butt system includes a smoke detector 14, panic/reset button 12 and a wireless transmitter. *Id.* at 4:29-34; Ex. 1002 ¶¶[171, 289].

Figure 1A

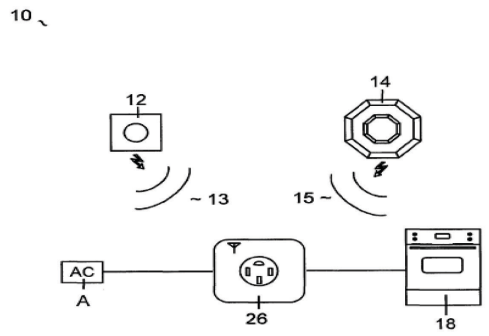

Id. at Fig. 1A. The system taught by Butt includes a smoke sensor in operative connection with the cooking area of a cooking range. Ex. 1015 at 2:22-25.

Butt further teaches a smoke detector is in operative connection to the controller (i.e., "at least one power control circuit"). If the detector detects smoke, then a signal is sent to the controller to interrupt power to the kitchen appliance:

> If the detector 14 detects the presence of smoke, then in the wireless embodiment illustrated in FIG. 1 an RF signal 15 is transmitted and is received by the controller 20.

Id. at 4:53-63; Ex. 1002 ¶¶[107, 172, 289].

"Further, in the embodiment shown in FIG. 1B [reproduced below], the controller 20, detector 14, and panic/reset button 12 are all wired together." *Id.* at 5:3-4. "The wiring takes the place of the RF signals 13, 15 illustrated in FIG. 1A."

Ex. 1015 at 5:3-4; Ex. 1002 ¶¶[173, 289].

Figure 1B

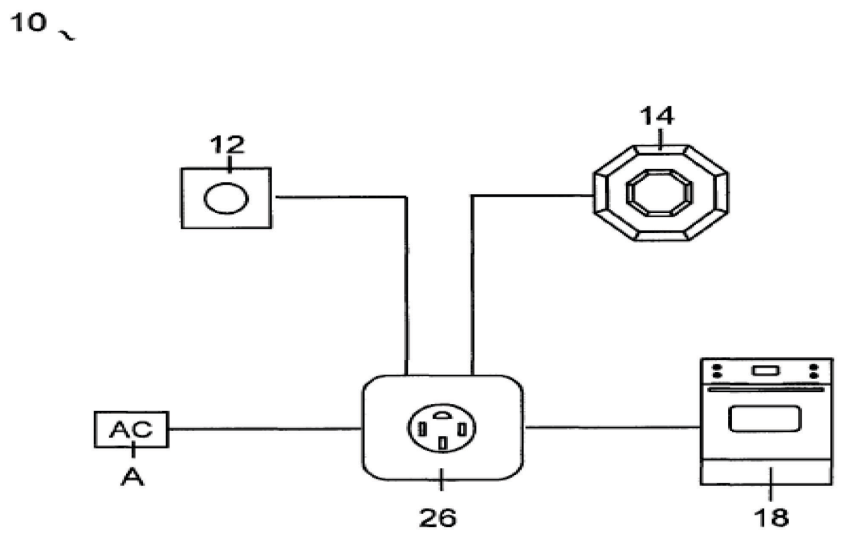

v. *Shut-Down Function*

(A) ISDU

ISDU discloses that when smoke is detected, the microwave oven operation is disabled, and the user is alerted to the smoke:

> [W]hen smoke is detected during microwave operation, the device will temporarily disable microwave operation and let the user know that the food has begun to smoke or even burn… The product, Integrated Smoke Detection Unit (ISDU) for commercial microwave ovens, will work in the following way. The presence of particulate during cooking will trigger our device thus sounding an alarm and halting microwave operations.

Ex. 1012 at 1; Ex. 1002 ¶¶[174-75, 289].

(B) Smith

Smith discloses a gas sensor in operative connection with a microprocessor (i.e., "at least one electrical power control circuit") that can cause power to be withdrawn prior to the gas sensor sensing at least one change in an amount of smoke sensed by the smoke sensor. Figure 5 (reproduced below) shows the control algorithm the microprocessor implements for smoke detection. Ex. 1002 ¶¶[180-81, 289]. Smith states:

> Upon detection of a rate of change greater than reference AL, (Yes to In-quiry 180) a signal is provided at output port R12 causing power control relay 68 to open, thereby deenergizing magnetron 40 and the blower motor 67 (Block 182). …The deenergizing of both the magnetron and the blower motor using either technique in effect turns off power to the oven. …. By detecting the occurrence of a rapid increase in the rate of change of concentration level by the hereinbefore described method, magnetron 40 is deenergized 35 prior to the load being heated in the oven reaching its actual combustion temperature, thereby anticipating a potential fire condition and preventing the load from reaching its combustion point.

Ex. 1014 at 9:17-39

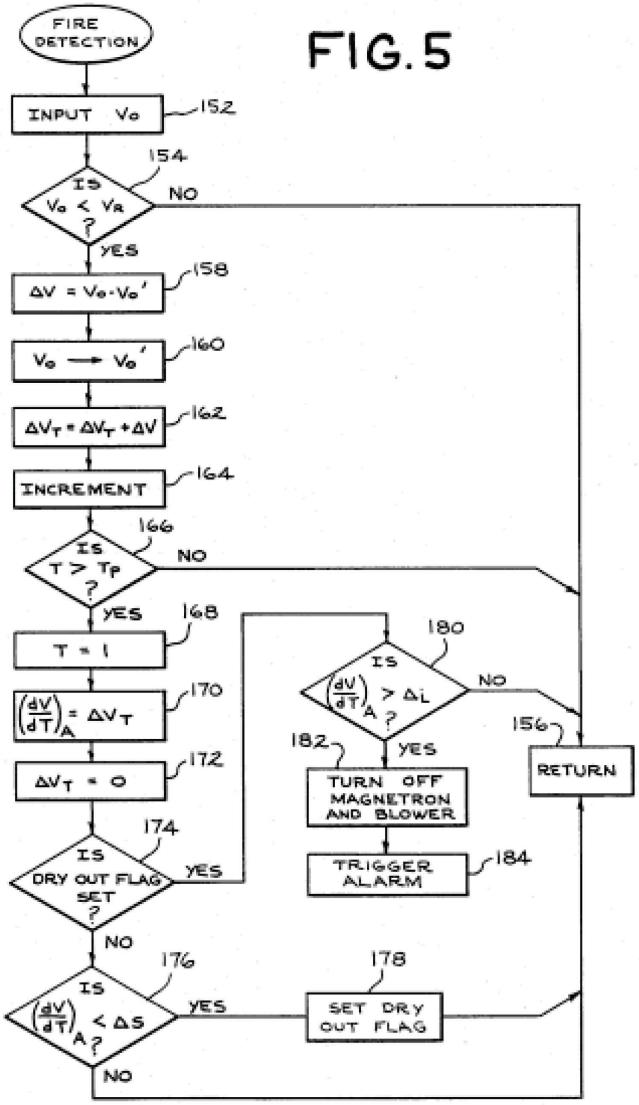

Id. at Fig. 5.

(C) Butt

As shown in FIG 1A (reproduced below), Butt teaches a detector (i.e., "smoke sensor") interrupting power to the appliance prior to the set end time of the cooking session upon the detector sensing smoke. For example, Butt teaches sending a control signal to a relay to prevent the flow of electricity to the electrical cooking

appliance:

> If the detector 14 detects the presence of smoke, then in the wireless embodiment illustrated in FIG. 1[A] [shown below] an RF signal 15 is transmitted and is received by the controller 20. Upon receiving the signal, ***the controller interrupts the AC power supply to the appliance 18 and consequently shuts the appliance 18 off***.

Id. at 4:53-67 (emphasis added); Ex. 1002 ¶¶[182, 184, 289].

Figure 1A

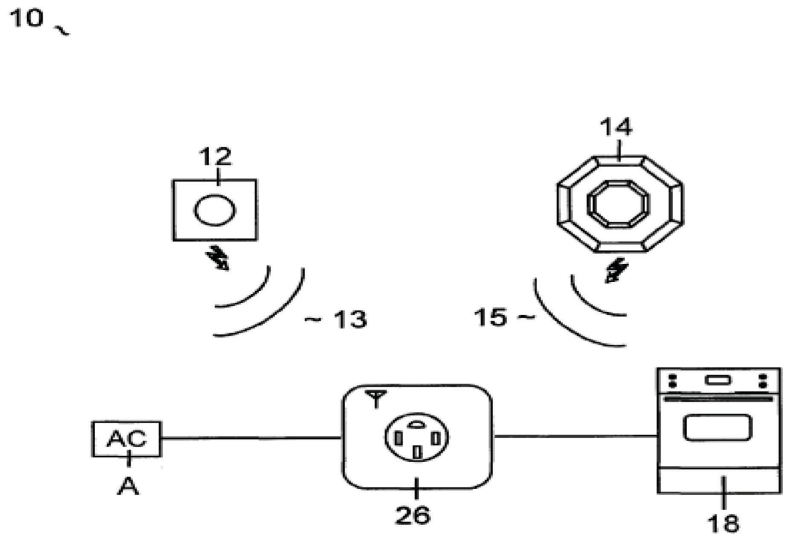

Butt further described that it was previously known to have a safety shut-off system to switch off an electrical appliance upon detecting a signal indicative of a fire: "a detector for detecting a signal indicative of fire, such as smoke; a switch that connects an appliance, such as an electric range, to an AC power supply; and a controller that opens the switch upon receiving a signal from the detector." Ex 1015

at 1:34-36; Ex. 1002 ¶¶[183, 185, 289].

vi. *Reset Enable Function*

Claim 21 recites:

> wherein the at least on electrical power control circuit is configured such that after ending the current cooking session prior to the set end time due to sensing the amount of smoke, to enable cooking power to again be available to the microwave oven in a next subsequent cooking session.

Ex. 1001 at claim 21.

(A) ISDU

ISDU discloses a smoke detection device ("i.e., smoke sensor") control circuit configured to reset and re-enable the microwave and smoke detection device after ending the cooking session due to the Shut Down Function:

> Triggering the smoke detector will output a number of alarm conditions to alert the user. The alarm state will consist of a suspension of normal microwave functions including the cessation of magnetron operation, a visual alert to be displayed on the integrated microwave LCD, and an audible alert. . . . ***Acknowledgement of the alarm state will reinstate all normal microwave functions and reset the smoke detector circuit for further use***.

Ex. 1012 at 8-9 (emphasis added). As shown above, ISDU discloses the microwave oven resetting to enable further cooking at least in part to the

smoke sensor no longer sensing the smoke. *Id.*; Ex. 1002 ¶¶[186-87, 283, 289].

(B) Butt

Butt teaches that a user may press the panic/reset button to enable the controller to restore power to the appliance: "when the danger posed by the fire has passed, a user can press the panic/reset button 12, which will transmit an RF signal 13 to the controller 20, and the controller 20 will restore the AC power supply to the appliance 18." Ex. 1015 at 3:63-67; Ex. 1002 ¶¶[192, 289].

The system of Butt will reset at least in part to the smoke sensor no longer sensing the smoke by checking to determine if the smoke alarm is still present following reset:

> Following the user's pressing the panic/reset button 12, the microcontroller 36 checks to see whether the smoke alarm 14 is active (block 62). If not, the microcontroller 36 sends a signal to the relay driver 42 to close the relay 44 (block 64), and enters a loop during which time it simply waits for either the signal 15 indicating that the smoke alarm 14 has detected Smoke or the signal 13 indicating that the panic/reset button 12 has been pressed (blocks 66 and 68).

Ex. 1015 at 6:53-60; Ex. 1002 ¶¶[193-94, 289].

As shown in FIG 7 (reproduced below), when the panic/reset button is pushed, the device enters a loop during which the smoke detection circuit is re-enabled to check for smoke:

> The relay 44 remains open until the panic/reset button 12 is pressed (block 74), following which the microcontroller 36 closes the relay 44 and again enters the loop during which it waits for the smoke detector 14 to detect smoke, for the panic/reset button 12 to be pressed, for the low-battery signal, or for the system to enter a lockout state, as described below (blocks 66, 68, 69 and 80).

Ex. 1015 at 7:15-21; Ex. 1002 ¶¶[195, 289].

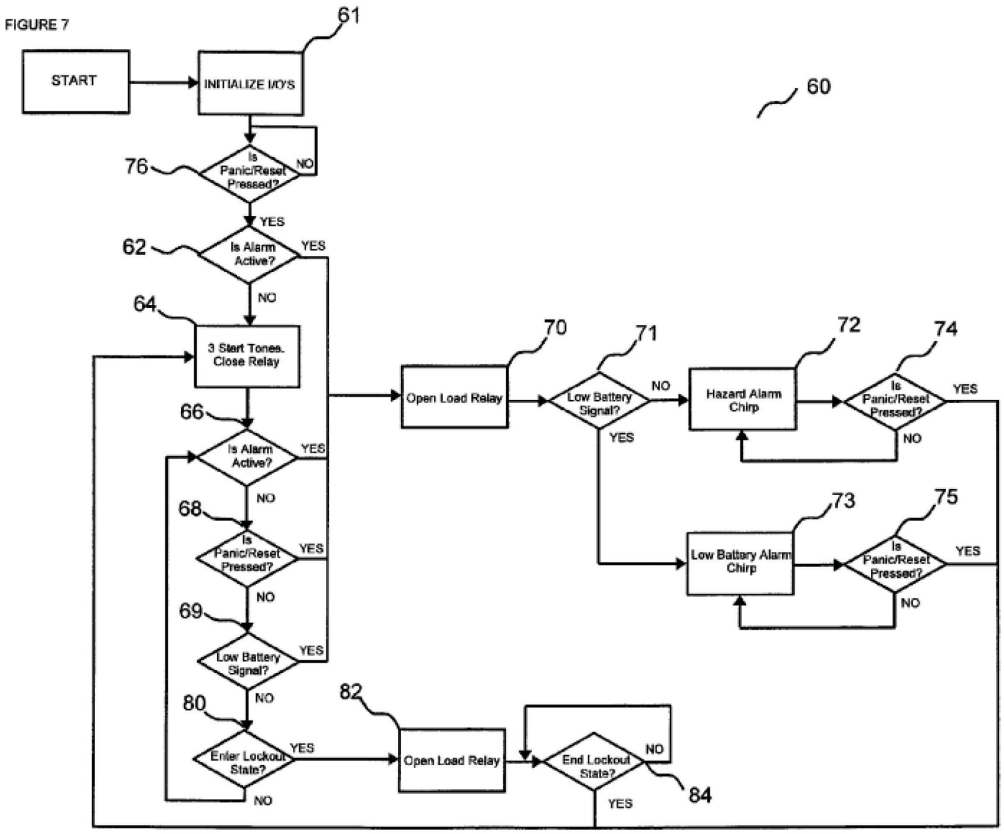

(C) Smith

Smith discloses an electrical circuit ("at least one electrical power control circuit") as shown in FIG 4 (annotated below), which is configured to allow the

microprocessor 64 to cycle power to the microwave magnetron. For example, this can be done by sending digital signals to a control the position of a relay in line with the magnetron power supply:

> Upon detection of a rate of change greater than reference ΔL, (Yes to Inquiry 180) ***a signal is provided at output port R12 causing power control relay 68*** to open, thereby de-energizing magnetron 40 and the blower motor 67 (Block 182). . . . The de-energizing of both the magnetron and the blower motor using either technique in effect turns off power to the oven.

Ex. 1014 at 9:17-28 (emphasis added); Ex. 1002 ¶¶[196-97, 289].

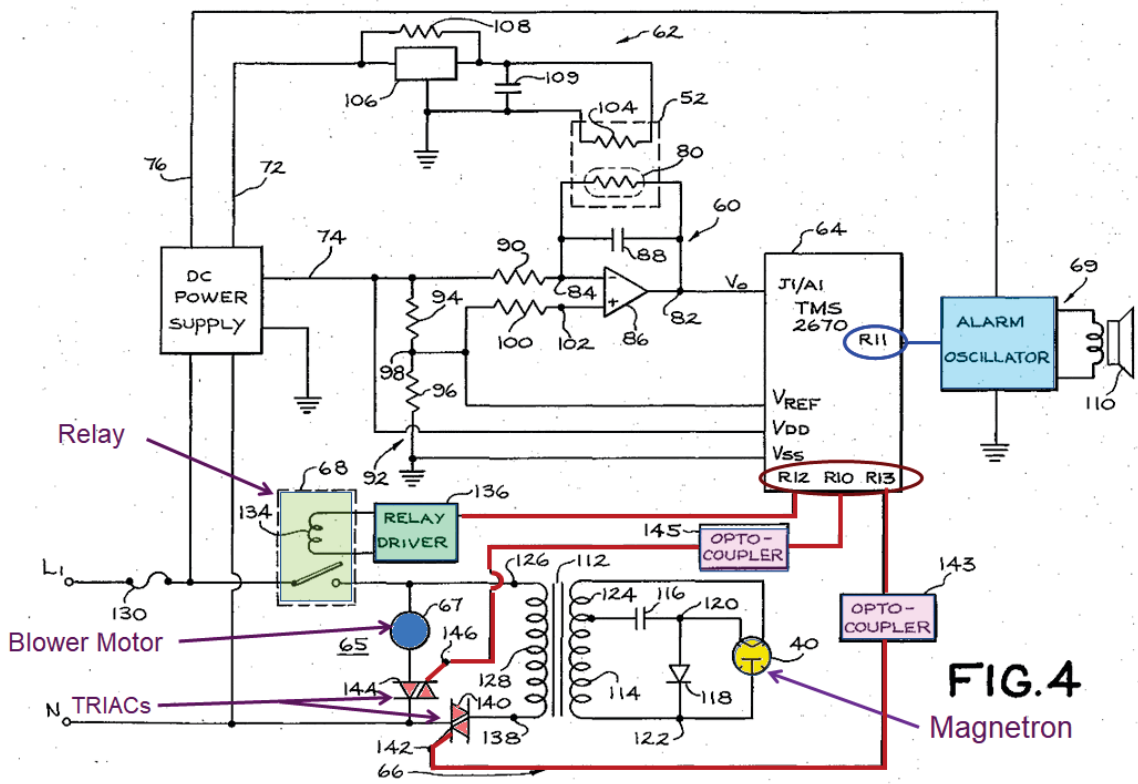

The disclosed power control relays are electronically controlled to open or shut by microcontroller 64. Ex 1002 ¶¶[196-97, 283, 289].

vii. *Withdraw and Deliver Electrical Power*

(A) Emma

Emma discloses a microprocessor ("at least one electrical power control circuit") that is operative to withdraw power to the refrigerator when the microwave is in use. For example, Emma recites "wherein the algorithm causes the control processor to disable the refrigerator and the second power supply outlet, when the microwave demands power." Ex. 1011 at claim 1. Emma further recites: "[r]efrigerator 3 is generally subject to control by the microwave microprocessor controller 4 of the microwave oven 2." *Id.*, ¶[0026]. "Controller 4 may be programmed to manage the power to the components of the system to avoid overload conditions, while minimizing disruptions in the use of an individual appliance." *Id.*, ¶[0030]; Ex. 1002 ¶¶[203, 205, 289].

As shown in the below diagram of the control circuit (Figure 4), Emma discloses a control circuit providing for digitally operating relays 19, 20 for controlling the low power auxiliary outlets 11, 12, and refrigerator receptacle 15.

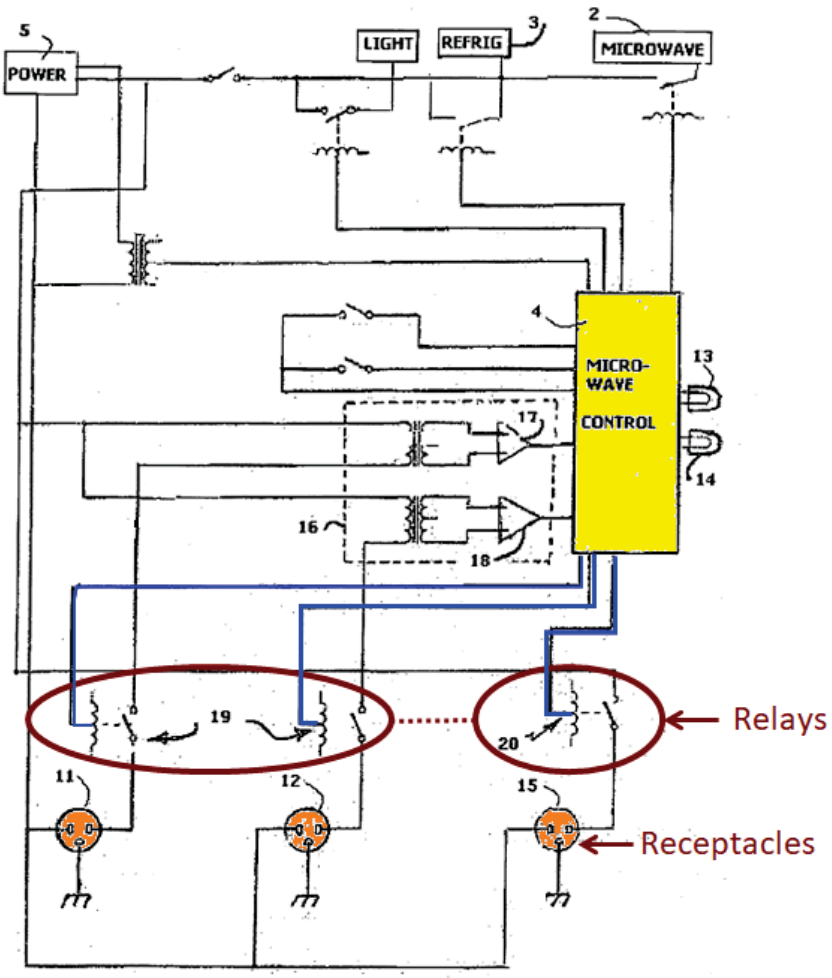

FIGURE 4

For example, as shown in the below Figure 7, when the Microwave demands cooking power it will first disable power to the Refrigerator and the auxiliary outlets to provide it necessary power. This is because "priority is given to the power demands of the microwave oven." Ex. 1011 ¶[0038]. "Use of the [auxiliary] receptacles 11, 12, and [refrigerator receptacle] 15 are, therefore, disabled during

microwave operation."[5] *Id.*; Ex. 1002 ¶¶[203, 289].

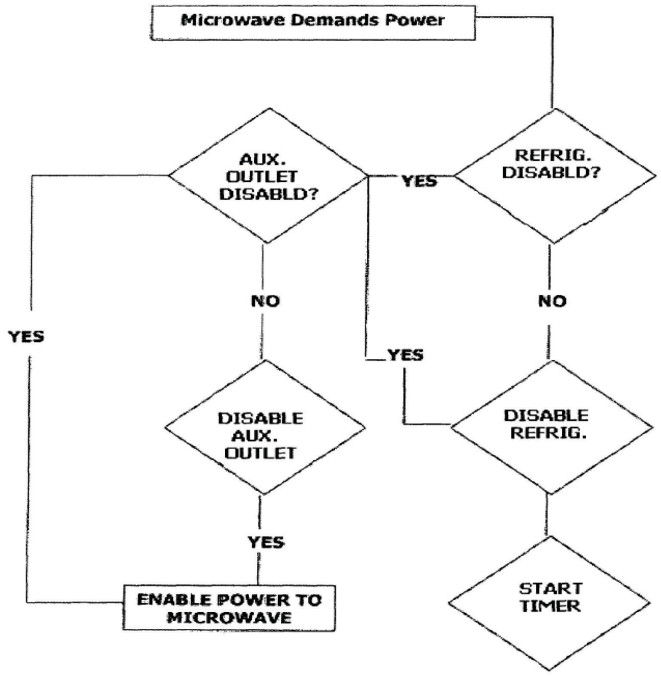

FIGURE 7

As another example, Figure 6 (reproduced below) is a processor operation model that shows what happens when the refrigerator demands power:

[5] For additional reference, *see* Figure 2 in VI.C.*1.b.* ii. (1).

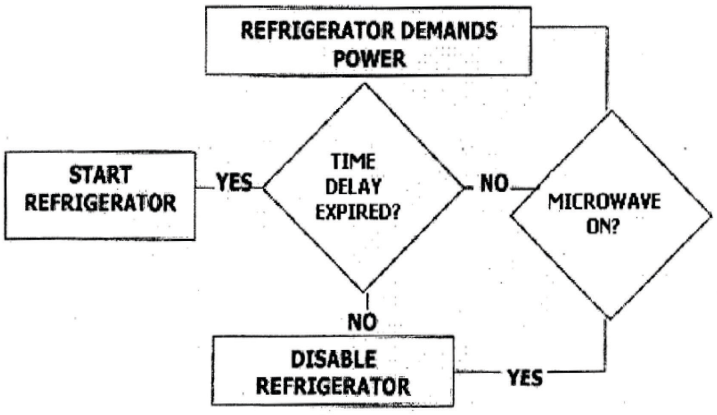

FIGURE 6

Ex. 1011 at Fig. 6; Ex. 1002 ¶¶[206, 289].

As shown above, "[i]f the microwave is on [when the refrigerator demands power], "the recycling of the refrigerator will be delayed. If the microwave was on and subsequently cycled off, the clock 21 must be checked to determine if the restart can occur." Ex. 1011¶[0037].

Because priority is given to the power demands of the microwave, Emma further discloses the microprocessor ceases electrical power to the compressor based on those demands: Specifically, "[i]f the refrigerator 3 is under power when the microwave 2 is turned on, the power, to the refrigerator is turned off and clock 21 begins to count for a predetermined period during which the compressor of refrigerator 3 cannot be restarted." *Id.*, ¶[0033]. Conversely, Emma discloses the microprocessor may enable power to the compressor and refrigerator when the microwave is not in use. Ex. 1002 ¶¶[203-06, 289].

b. ***Claim 26 - Auxiliary Output Device***

(A) Emma

Emma discloses a microwave oven that includes at least one auxiliary low power receptacle (i.e., "an auxiliary electrical outlet") which is in operative connection with the control circuit, and wherein the microcontroller is operative to cause the auxiliary low power receptacle to be inoperative when the microwave oven demands cooking power. Ex. 1011 at ¶[0038]. Emma describes enabling and disabling power to the microwave oven and its first and second power supply outlets based on the control algorithm in the processor:

> wherein the control processor is configured to enable or disable power to the microwave oven, ***the first power Supply outlet and the second power Supply outlet***, according to an algorithm in the control processor, and wherein the algorithm causes the control processor to: disable the refrigerator and the second power Supply outlet, when the microwave demands power; and enable the second power supply outlet when the microwave is off.

Id. at claim 1 (emphasis added); Ex. 1002 ¶[292].

As shown in Figure 4 (annotated below), Emma discloses a control circuit for digitally operating relays 19, 20 for controlling the low power auxiliary outlets 11, 12, and refrigerator receptacle 15:

> As shown in FIG. 4, in order to control the power to the microwave 2, refrigerator 3 and receptacles 11 and 12, sensing circuits, may be coupled to the controller to monitor current to the appliances and the

> auxiliary receptacles. A relay 20 is connected in the power line to the refrigerator and may be actuated by signals from controller 4. In particular, according to an embodiment of this application, sensing circuits 16, as shown in FIG. 4, have sensors 17 and 18 coupled to the power line of the auxiliary outlets 11 and 12 to monitor the current being used by a connected device.

Ex. 1011 ¶[0029]; Ex. 1002 ¶[293].

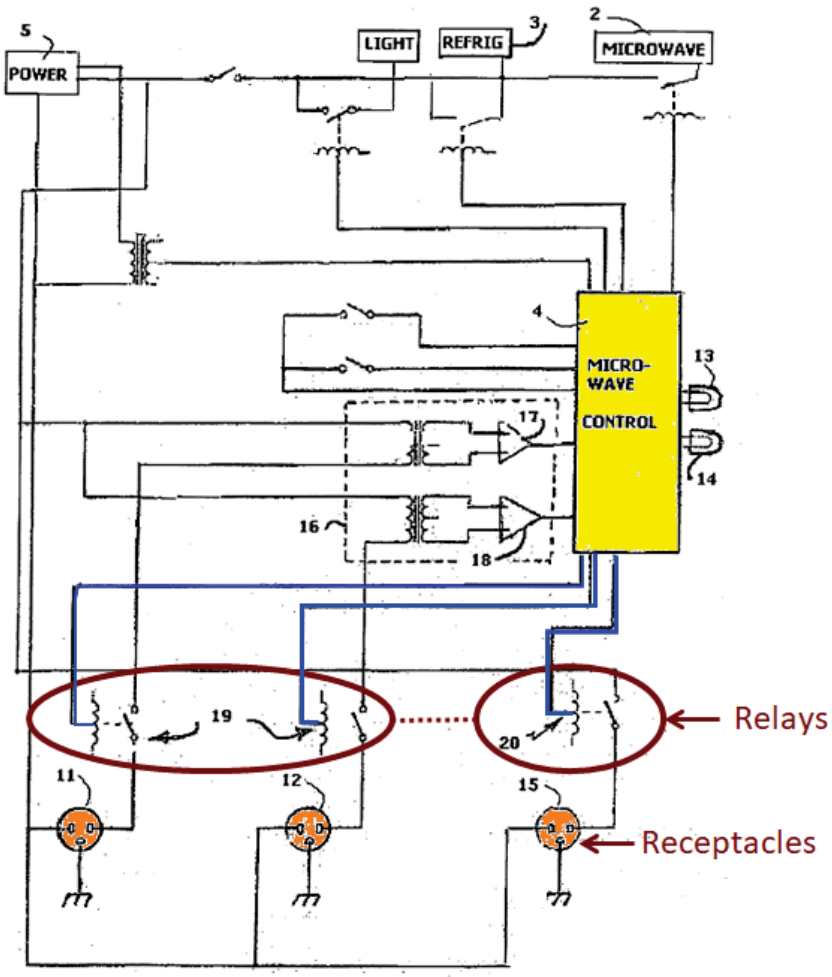

FIGURE 4

Ex. 1011at Fig. 4 (annotated).

As shown in Figure 7 (reproduced below), Emma further teaches, priority is given to the power demands of the microwave oven. Ex. 1002 ¶[294]

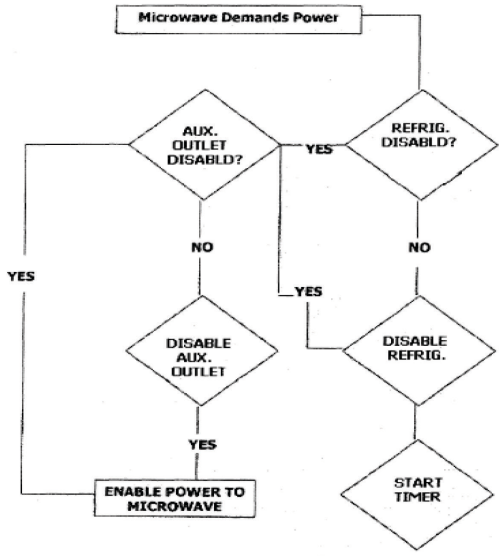

FIGURE 7

Ex. 1011 at Fig. 7. As shown above, "[u]se of the receptacles 11, 12, and 15 are, therefore, disabled during microwave operation. The operational models…may be established by algorithms that are programmed or imbedded in controller 4." *Id.* at ¶[0038]; Ex. 1002 ¶[294].

c. ***Claim 28 – VOC Sensor***

(A) ISDU

ISDU discloses both "ionization and photoelectric smoke detectors." Ex. 1012 at 9; Ex. 1002 ¶[295].

(B) Smith

As discussed above, Smith discloses a microwave oven which includes a

smoke /gas sensor. *Supra* at §VI.C.1.a.iv. (B). The Smith gas sensor is adapted to detect VOC and is thus, a VOC sensor Ex 1002 ¶[296].

(C) Butt

Butt's exemplary smoke detectors include: "ADEMCO 5806 detector, the SecureLinc (73942) detector, and the Wisdom 433 Mhz Wireless Smoke Detector." Ex. 1015 at 4:49-52. The Ademco 5806 is a photoelectric smoke detector. Ex 1002 ¶[297].

1. Explanation of Asserted Grounds and Rationales Supporting a Conclusion of Obviousness

a. ***Ground 1: Obvious in view of Emma combined with ISDU***

Ground 1 is all of the Challenged Claims are obvious because it would have been obvious to combine the microwave-refrigerator appliance of Emma with the ISDU smoke sensor. *Id.*, ¶[298]. There are numerous reasons that a POSITA would make a combination of the microwave refrigerator combination of Emma with the smoke sensor of ISDU. *Id.*, ¶¶[298, 303]. First, all the claimed elements were known in the prior art and a POSITA would have combined the elements as claimed by known methods, with no change in their respective functions. *Id.*, ¶[303]. The combination would have yielded nothing more than predictable results to one of ordinary skill in the art. *Id.* While Emma fails to recite a smoke sensor, Emma does disclose adding functionality to appliances by cycling power to a refrigerator and auxiliary electrical outlets for the purpose of improving the safety of the Emma

appliance (preventing overload conditions). *Id.* Emma's teaching would motivate a POSITA to look to further microwave functionalities, including those in ISDU. *Id.*.

Both Emma and ISDU disclose shutdown conditions while using electrical cooking appliances that provide added functionality. *Id.,* ¶[304]. Additionally, ISDU, explicitly relates to added features of microwave ovens. *Id.*; *supra* at §VI.B.2.b. It would have been obvious to a POSITA to combine the additional microwave oven safety features of ISDU into the Emma microwave/refrigerator combination appliance to provide the added microwave features discussed in ISDU. Ex 1002 ¶[304]. Specifically, to enable the Emma microwave to shut down upon the detection of smoke and reenable the Emma microwave for a further cooking session when the smoke has cleared. *Id.* Further, it would have also been obvious to a POSITA to modify ISDU with the features of the microwave/refrigerator combination of Emma for the purpose and convenience of having an "all-in-one appliance" in addition to the safety feature of managing total power draw as taught by Emma. *Id.*

Finally, the claims recite that "the smoke sensor is positioned in operative connection with a cooking area inside the microwave oven." Petitioner contends ISDU meets this limitation as shown in Section VI.C.1.a.iv.(A), because it operates in response to conditions in the microwave. Ex. 1002 ¶[299]. However, to the extent the Board determines there is a positioning requirement and ISDU's smoke sensor

is not in "operative connection with the cooking area inside the microwave oven" it would have been obvious to do so. *Id.* Based on the teaching and suggestion provided in ISDU, it would have been obvious to a POSITA to place the smoke sensor with sufficient position to the cooking area for it to operate with respect to the source of smoke (initiating at the food being heated). *Id.* This is consistent with the express teaching of ISDU that it is integrated with the microwave oven. *Id.* Additionally, ISDU specifically teaches this. *Id.* When referring to prior art, it states: "[w]ith the introduction of a smoke detection circuit *inside* the microwave the consumer will be alerted, by a louder more intense alarm, that they have overcooked their food or that there is another cause of smoke *inside* the microwave." *Id.*; Ex. 1012 at 4.

Based on ISDU's teaching and/or the motivation to have the smoke sensor be optimally positioned in a location to detect generated smoke close to its source, a POSITA would have placed, or at least tried to place, the smoke detection sensor in operative connection with the cooking area of the microwave oven; otherwise, it would not function as intended. Ex 1002 ¶[300]. The POSITA would have had a reasonable expectation of success in detecting smoke more quickly compared to attempting to detect smoke using a smoke detector positioned further away from the cooking area. *Id.*

Additionally, it would have been "obvious to try" placing the sensor in

operative connection with the cooking area of the microwave as opposed to outside/around the microwave oven, as there are only a finite number of identified, predictable solutions (i.e., just two feasible: inside or outside), with a reasonable expectation for success. *Id.*, ¶[301]. ISDU emphasized that at the time there was a market need to prevent fires but only a finite number of solutions for integrating smoke sensors into microwave ovens. *Id.* Further, it would have been obvious to integrate any smoke sensor inside a microwave oven to create a commercially integrated package for sale and shipping. *Id*. A POSITA would have pursued trying to place the smoke detection sensor inside the microwave oven with a reasonable expectation of success which would have been grounded on the disclosures of the prior art. *Id.*

Should the Board decide that "operative connection" means close proximity, ISDU teaches this as well. *Id.,* ¶[302]. It would have been well understood from the art how a microwave oven and a smoke detection sensor work (the smoke detector should be in proximity to the cooking operation to detect the smoke), and a POSITA would have substituted the placement of the smoke sensor inside as opposed to outside/around the microwave oven and obtained predictable results. *Id.*

b. ***Ground 2: Obvious in view of Emma combined with Smith***

Ground 2 is that it would have been obvious to combine the microwave refrigerator combination of Emma with the smoke sensor discussed in Smith. As

discussed above, Emma discloses a microwave refrigerator combination. Smith teaches a microwave oven that is designed to shut down the microwave based on a smoke sensor positioned inside the microwave oven and in operative connection with the cooking area detecting the food being cooked, almost reaching its combustion point. *Supra* at §VI.B.2.c; Ex. 1002 ¶[305].

There are numerous reasons why a POSITA would have combined the microwave refrigerator combination taught in Emma, with the Smoke Sensor operatively placed inside the microwave oven as in Smith. Ex 1002 ¶[307].

First, Emma and Smith each relate to optimizing electric cooking appliances, including specifically microwaves. *Id.*, ¶[308]. Second, all the claimed elements of the Challenged Claims were known in the prior art, and a POSITA would have combined the elements as disclosed by known methods for the purposes of providing Emma's microwave refrigerator combination with Smith's smoke sensor operatively connected with the cooking area. *Id.* Such a combination would have yielded nothing more than predictable results to one of ordinary skill in the art. *Id.* While Emma fails to recite a smoke sensor, Emma does disclose adding functionality to appliances by cycling power to a refrigerator and auxiliary electrical outlets for the purpose of improving the safety of the Emma appliance (preventing overload conditions). *Id.* Emma's teaching would motivate a POSITA to look to further microwave functionalities, including those in Smith. *Id.*

Any inclusion of Smith's smoke senor operatively connected with the cooking area with Emma, would result in such elements merely performing the same function as they do separately, i.e., smoke sensing to withdraw electrical power from an electrical cooking appliance and then enabling resetting of the electrical cooking appliance. *Id.*, ¶[309]. A POSITA would have recognized that the results of said combination were predictable because Emma and Smith function to digitally control power control circuitry for an electrical appliance based on a sensor input. *Id.*

Third, a POSITA would have been motivated to combine Emma and Smith based on the teachings of each reference. *Id.*, ¶[310]. Emma, and Smith are both directed towards shutting down a component of the device in response to a sensor output indicative of an unwanted condition. *Id.* Emma teaches withholding power based on the power demands of the microwave oven. *Id.* Smith inherently teaches a power control relay designed to be power cycled by the controller. *Id.* It would have been obvious to a POSITA to modify Emma with Smith to include the smoke sensor in operative connection with the microwave oven following the elimination of the unwanted condition detected and re-check for smoke condition for the added benefit of re-using the microwave oven. *Id*. A POSITA would have been able to pursue any of these known potential solutions with a reasonable expectation of success grounded in the disclosures of the prior art. *Id.*

Fourth, it would have also been obvious to a POSITA to modify Smith with

the features of the microwave/refrigerator combination of Emma for the purpose and convenience of having an "all-in-one appliance" in addition to the safety feature of managing total power draw as taught by Emma. Ex 1002 ¶[237].

Fifth, a POSITA would also have found the asserted combinations of Emma and Smith "obvious to try." *Id.*, ¶[311]. As shown in Emma and Smith, at the time of the invention, there was a recognized need in the art to optimize microwave ovens. Ex. 1011 ¶[0007]; Ex. 1014 at 1:6-40. Therefore, it would have been obvious to a POSITA to try this combination. Ex 1002 ¶[311].

Finally, Petitioner contends Smith discloses the Reset Enable Function as shown in Section VI.C.1.a.vi.(C). Should the Board disagree, it would have been obvious to modify Smith and/or the Smith/Emma combination to reset the microwave oven following the smoke sensor no longer sensing smoke Ex 1002 ¶[305]. First, based on a teaching suggestion or motivation in Smith, a POSITA would modify Smith and/or the Smith/Emma combination to contain the Reset Enable Function. *Id.*

The shutdown function of Smith is configured to be reversible by the control of the Smith and/or the Smith/Emma combination microcontroller through the use of an electronically controlled relay. *Id.*, ¶[306] Further, Smith teaches that a goal of the Smith smoke sensor is to anticipate fires before they occur. Ex. 1014 at 1:6-9. Resetting the microwave – undamaged upon early detection of a fire in its early

stages – would re-enable the microwave for use again in a subsequent cooking session and would prevent replacing a costly appliance or service call when such replacement or service would not be necessary. Ex 1002 ¶[306]. Moreover, a POSITA would have understood that modifying Smith and/or the Smith/Emma combination to return to a reset state following a shutdown condition and resetting the smoke detection circuitry would yield a reasonable expectation of success and allow for successive detection of smoke events. *Id*. A POSITA would have understood, for example, that a microwave is a commercially sold cooking appliance. *Id.* It would be problematic to offer for sale a microwave oven that had to be serviced or replaced after just one trip of its smoke detection circuit. *Id.*

Lastly, it would have been "obvious to try" to add a Reset Enable Function as discussed previously, because all of the microwave components disclosed in Smith and/or the Smith/Emma combination are non-destructive, as discussed above, and designed to be power cycled. *Id.*, ¶¶[306, 311]. Thus, there would only be a finite number of potential solutions and conditions for restarting the microwave after the shutdown. A POSITA would have included such a feature with a reasonable expectation of success. *Id.*, ¶[306]

c. ***Grounds 3 and 4: Obvious in view of Emma combined with Butt alternatively, with Butt and Smith***

Ground 3 is that it would have been obvious to combine the microwave refrigerator combination of Emma with the smoke sensor taught in Butt. There are

numerous reasons that a POSITA would make a combination of the microwave refrigerator combination of Emma with the smoke sensor of Butt. *Id.*, ¶[314]. First, all the claimed elements were known in the prior art and a POSITA would have combined the elements as claimed by known methods, with no change in their respective functions. *Id.* The combination would have yielded nothing more than predictable results to one of ordinary skill in the art. *Id.* While Emma fails to recite a smoke sensor, Emma does disclose adding functionality to appliances by cycling power to a refrigerator and auxiliary electrical outlets for the purpose of improving the safety of the Emma appliance (preventing overload conditions). *Id.* Emma's teaching would motivate a POSITA to look to further microwave functionalities, including those in Butt. *Id.*

Both Emma and Butt disclose shutdown conditions while using electrical cooking appliances that provide added functionality. *Id.*, ¶[315]. Additionally, Butt, explicitly relates to added features of kitchen appliances. *Id.*; *supra* at §VI.C.2.d. It would have been obvious to a POSITA to combine the additional kitchen appliance safety features of Butt into the Emma microwave/refrigerator combination namely to enable the Emma microwave to shut down upon the detection of smoke and reenable the Emma microwave for a further cooking session when the smoke has cleared. Ex 1002 ¶[315]. Further, it would have also been obvious to a POSITA to modify Butt with the features of the microwave/refrigerator combination of Emma

for the purpose and convenience of having an "all-in-one appliance" in addition to the safety feature of managing total power draw as taught by Emma. *Id.*

To the extent the Board determines that the combination of Emma and Butt do not render obvious the Challenged Claims, Ground 4 is it would be obvious to a POSITA to combine Emma with Butt and Smith. *Id.*, ¶[316].

First, Emma, Butt and Smith each relate to optimizing electric cooking appliances. *Id.*, ¶[317]. Second, all the claimed elements of the Challenged Claims were known in the prior art, and a POSITA would have combined the elements as disclosed by known methods for the purposes of modifying Emma's microwave refrigerator combination to include Smith's smoke sensor to be operatively connected with its cooking area and to include Butt's smoke sensor and reset functionality. *Id.* Such a combination would have yielded nothing more than predictable results to one of ordinary skill in the art. *Id.* Any inclusion of Butt's reset functionality with Smith's smoke senor operatively connected with the cooking area into Emma, would result in such elements merely performing the same function as they do separately, i.e., smoke sensing to withdraw electrical power from an electrical cooking appliance and then re-enabling the electrical cooking appliance. *Id.* A POSITA would have recognized that the results of said combination were predictable because Emma, Butt and Smith function to digitally control power control circuitry for an electrical appliance based on a sensor input. *Id.*

Third, a POSITA would have been motivated to combine Emma Butt and Smith based on the teachings of each reference. *Id.*, ¶[318]. Specifically, Emma, Butt and Smith are each directed towards shutting down a component of the device in response to a sensor output indicative of an unwanted condition. *Id.* Emma teaches withholding of power based on the power demands of the microwave oven. *Id.* Butt discloses shutting down electrical cooking appliances in response to a smoke sensor, and also discloses resetting the electrical power supply to the cooking appliance after a smoke-triggered shutdown condition. *Id.*; *supra* at §VI.C.1.a.v.(C), §VI.C.1.a.vi(B). Similarly, Smith inherently teaches a power control relay for the microwave magnetron designed to be power cycled by the controller. *Supra* at §-VI.C.1.a.iii.(C); Ex. 1002 ¶[318]. It would have been obvious to a POSITA to modify Emma with Butt and Smith to include the smoke sensor in operative connection with the microwave oven with the reset functionality disclosed by Butt for the added benefit of re-using the microwave oven. Ex 1002 ¶[318]. A POSITA would have been able to pursue any of these known potential solutions with a reasonable expectation of success grounded in the disclosures of the prior art. *Id.*

Fourth, a POSITA would also have found the asserted combinations of Emma Butt with Smith "obvious to try." *Id.*, ¶[319]. As shown in Emma, Butt and Smith, at the time of the invention, there was a recognized need in the art to optimize microwave ovens. *Id.*; Ex. 1011 ¶[0007]; Ex. 1015 at 1:22-44; Ex. 1014 at 1:6-40. Therefore, it

would have been obvious to a POSITA to try this combination.

Finally, Petitioner contends Butt discloses "wherein the smoke sensor is positioned in operative connection with a cooking area inside the microwave oven" because there is no positioning requirement. However, should the Board disagree, it would have been obvious to a person of ordinary skill in the art to modify the Emma/Butt combination to teach a smoke sensor in operative connection with a cooking area inside a kitchen appliance, in this case a microwave oven. Ex 1002 ¶[312]. Butt teaches a user enabled reset device which can be initiated following the smoke detector unit detecting smoke and ceasing the supply of power to the appliance. *Id.*; *supra* at §VI.C.1.a.v.(C), §VI.C.1.a.vi.(B). Butt's reset function reinitializes the system for further use by checking for a smoke alarm system signal and closing a relay to reconnect the electrical appliance to AC power if no such signal is detected. Ex 1002 ¶[312]. There are numerous reasons that a POSITA would make a modification in the Emma/Butt combination to position the smoke detection sensor in operative connection with the inside of the microwave oven. *Id.* First, based on the teaching and suggestion provided in Emma/Butt combination, it would have been obvious to a POSITA to place the smoke sensor to be in operative connection with the cooking area inside the microwave oven because that would place it in closer proximity to the source of smoke (initiating at the food being heated) and the smoke detector must be in operative connection for it to function as

a smoke detector. *Id.* This is consistent with the express teaching of Butt that it is integrated with the kitchen appliance. *Id.*

Based on Butt's teaching and/or the motivation to have the smoke sensor be positioned in a location to detect generated smoke close to its source, a POSITA would have placed, or at least tried to place, the smoke detection sensor in operative connection with the cooking area of any kitchen appliance in this case, a microwave oven. *Id.*, ¶[313]. The POSITA would have had a reasonable expectation of success in detecting smoke more quickly compared to attempting to detect smoke using a smoke detector positioned further away from the cooking area. *Id.*

Lastly, if it is determined that Butt fails to teach the VOC Sensor claim element, it would have been obvious to a POSITA to use either a photoelectric or ionization smoke sensor as the Butt smoke sensor, because photoelectric and ionization smoke sensors are common smoke detector designs that would have been known to a POSITA. *Id.*, ¶[320].

A. Objective Indicia of Nonobviousness do not weigh in favor of Patentability

Petitioner is currently unaware of any objective indicia that could overcome the strong showing of obviousness set forth above. Should Patent Owner identify any objective indicia, Petitioner requests an opportunity to rebut any such evidence. *Amneal Pharms. v. Supernus Pharms.*, IPR2013-00368, Paper 8, at 12-13 (PTAB Dec. 17, 2013).

VII. CONCLUSION

For the foregoing reasons, Petitioner respectfully requests that trial be instituted and that all Challenged Claims of the ’876 Patent be cancelled.

Dated: June 8, 2023

Respectfully submitted,

/Domingo M. LLagostera/
Domingo M. LLagostera
Reg. No. 70,684
Counsel for Petitioner

CERTIFICATE OF WORD COUNT

I hereby certify that the foregoing Petition complies with the type-volume limitation of 37 C.F.R. §42.24 and contains 11,108 words based on the word count indicated by the word processing system used to prepare this Petition, excluding those portions exempted by §42.24(a)(1). I also certify that the foregoing Petition complies with the general format requirements of 37 C.F.R. §42.6(c) and has been prepared using Microsoft® Word in 14-point, Times New Roman font.

/Domingo M. LLagostera/
Domingo M. LLagostera
Reg. No. 70,684
Counsel for Petitioner

CERTIFICATE OF SERVICE

I hereby certify that on this 8th day of June, 2023, a copy of this Petition for Inter Partes Review, Petition Appendix A, and Petitioner's Exhibits 1001–1019 were served by Federal Express on the following correspondence address of record for patent owner, pursuant to 37 C.F.R. §42.105(a):

WALKER & JOCKE CO., LPA
231 South Broadway Street
Medina, OH 44256

Courtesy copies of these documents were also sent via electronic mail to Patent Owner's litigation counsel listed below:

R. Scott Johnson
Thomas M. Patton
Cara S. Donels
FREDRIKSON & BYRON, P.A.
111 East Grand Avenue, Suite 301
Des Moines, IA 50309-1977
Telephone: (515) 242-8900
Facsimile: (515) 242-8950
rsjohnson@fredlaw.com
tpatton@fredlaw.com
cdonels@fredlaw.com

/Domingo M. LLagostera/

Domingo M. LLagostera
Reg. No. 70,684
Counsel for Petitioner

Petition Appendix A

Listing of Challenged Claims for U.S. Patent No. 11,274,876

Descriptor	Claim 1	Claim 21[1]	Claim 26	Claim 28
	Apparatus comprising: an appliance including	Apparatus comprising: an appliance including	The apparatus according claim 21,	The apparatus according to claim 21,
"**Microwave Oven**"	a microwave oven	a microwave oven, wherein the microwave oven is in operative electrical connection with the at least one electrical power control circuit, wherein the microwave oven includes an interior cooking area,		
"**Refrigerator**"	a refrigerator, wherein the refrigerator is in fixed operative mechanical connection with the microwave oven,	a refrigerator, wherein the refrigerator is in operative electrical connection with the at least one electrical power control circuit, wherein the refrigerator includes a plurality of electrically powered refrigerator components,		

[1] Certain claim elements of this claim have been reordered in this chart to align like claim elements with the same descriptors.

Descriptor	Claim 1	Claim 21[1]	Claim 26	Claim 28
"**Control Circuit**"	at least one power control circuit, wherein the at least one power control circuit is in operative electrical connection with the microwave oven and the refrigerator, a single power cord, wherein the single power cord is configured to be releasably connected to a source of electrical power, wherein the at least one power control circuit is supplied with electrical power only through the single power cord,	at least one electrical power control circuit,		
"**Smoke Sensor**"	wherein the microwave oven includes a smoke sensor, wherein the smoke sensor is positioned in operative connection with a cooking area inside the microwave oven, is in operative connection with the at least one power control circuit,	a smoke sensor, wherein the smoke sensor is positioned in operative connection with the cooking area,		

Descriptor	Claim 1	Claim 21[1]	Claim 26	Claim 28
"**Shutdown Function**"	wherein responsive at least in part to a level of smoke sensed by the smoke sensor, the at least one power control circuit is operative to cause cooking power to the microwave oven to be withdrawn to end a cooking session prior to a set end time of the current cooking session,	wherein the smoke sensor is in operative connection with the at least one electrical power control circuit and is configured to cause cooking power to be withdrawn from the microwave oven prior to a set end time of a current cooking session responsive at least in part to the smoke sensor sensing an amount of smoke,		
"**Reset Enable Function**"	wherein after the end of the current cooking session prior to the set end time based on the sensed level of smoke, the at least one control circuit is operative thereafter to enable the microwave oven to receive cooking power in a next subsequent cooking session,	wherein the at least one electrical power control circuit is configured such that after ending the current cooking session prior to the set end time due to sensing the amount of smoke, to enable cooking power to again be available to the microwave oven in a next subsequent cooking session,		

Descriptor	Claim 1	Claim 21[1]	Claim 26	Claim 28
"Withdraw and Deliver Electrical Power"	wherein the at least one power control circuit is operative to withhold electrical power from at least one component of the refrigerator when the microwave oven draws cooking power, and deliver electrical power to the refrigerator when the microwave oven does not draw cooking power.	wherein the at least one electrical power control circuit is operative to cause electrical power to be unavailable to at least one electrically powered refrigerator component when the microwave oven is operative to draw cooking power, and electrical power to be available to the at least one electrically powered refrigerator component when the microwave oven does not draw cooking power.		

Descriptor	Claim 1	Claim 21[1]	Claim 26	Claim 28
"Auxiliary Output Device"			wherein the microwave oven further includes at least one output device including at least one of a USB port, an inductance charging pad, and an auxiliary electrical outlet, wherein the at least one output device is in operative connection with the at least one electrical control circuit, and wherein the at least one electrical control circuit is operative to cause the at least one output device to be inoperative when the microwave oven draws cooking power.	

Descriptor	Claim 1	Claim 21[1]	Claim 26	Claim 28
"VOC Sensor"				wherein the smoke sensor includes at least one of a radiation emitter and radiation receiver, a photosensor, a motion sensor, an ionization sensor, and a VOC sensor.