US 20130249302A1

(19) United States

(12) Patent Application Publication

AN et al.

(10) Pub. No.: US 2013/0249302 A1

(43) Pub. Date: Sep. 26, 2013

(54) **WIRELESS POWER RECEIVER AND METHOD OF MANUFACTURING THE SAME**

(71) Applicant: **LG INNOTEK CO., LTD.**, Seoul (KR)

(72) Inventors: **Jeong Wook AN**, Seoul (KR); **Jung Oh LEE**, Seoul (KR); **Sung Hyun LEEM**, Seoul (KR); **Yang Hyun KIM**, Seoul (KR)

(73) Assignee: **LG INNOTEK CO., LTD.**, Seoul (KR)

(21) Appl. No.: **13/663,012**

(22) Filed: **Oct. 29, 2012**

(30) **Foreign Application Priority Data**

Mar. 23, 2012 (KR) 10-2012-0029987
Jul. 19, 2012 (KR) 10-2012-0079004

Publication Classification

(51) **Int. Cl.**
H04B 5/00 (2006.01)
H01F 41/14 (2006.01)

(52) **U.S. Cl.**
CPC ***H04B 5/0037*** (2013.01); ***H04B 5/0081*** (2013.01); ***H01F 41/14*** (2013.01)
USPC **307/104**; 29/602.1

(57) **ABSTRACT**

A wireless power receiver according to one embodiment includes a magnetic substrate and a coil configured to wirelessly receive power, wherein the coil is formed as a conductive layer on the magnetic substrate.

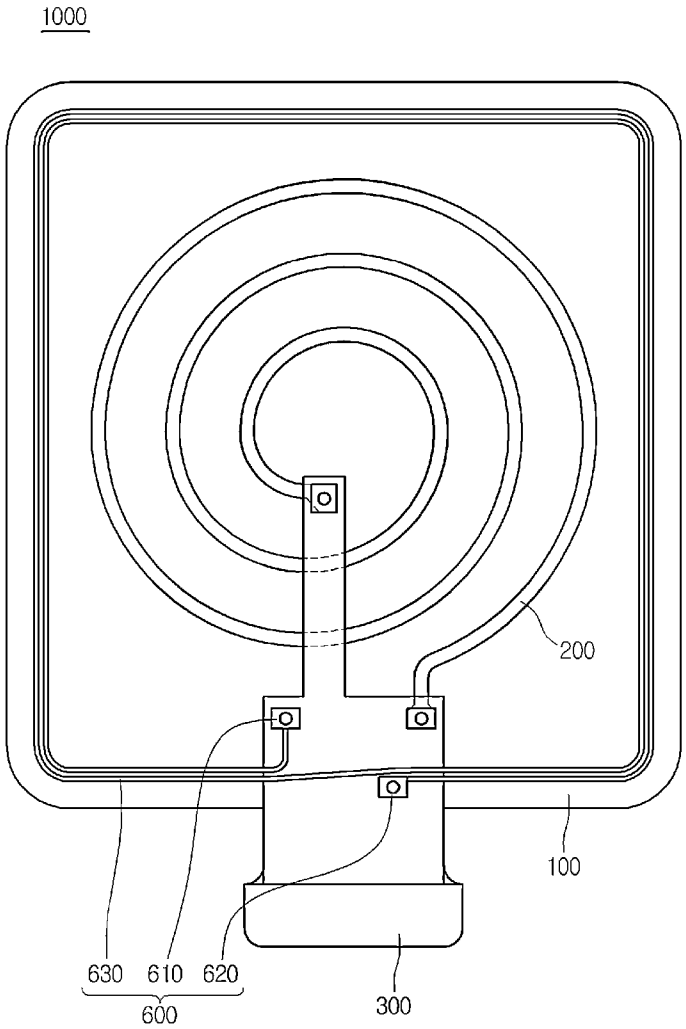

BMW EXHIBIT 1019

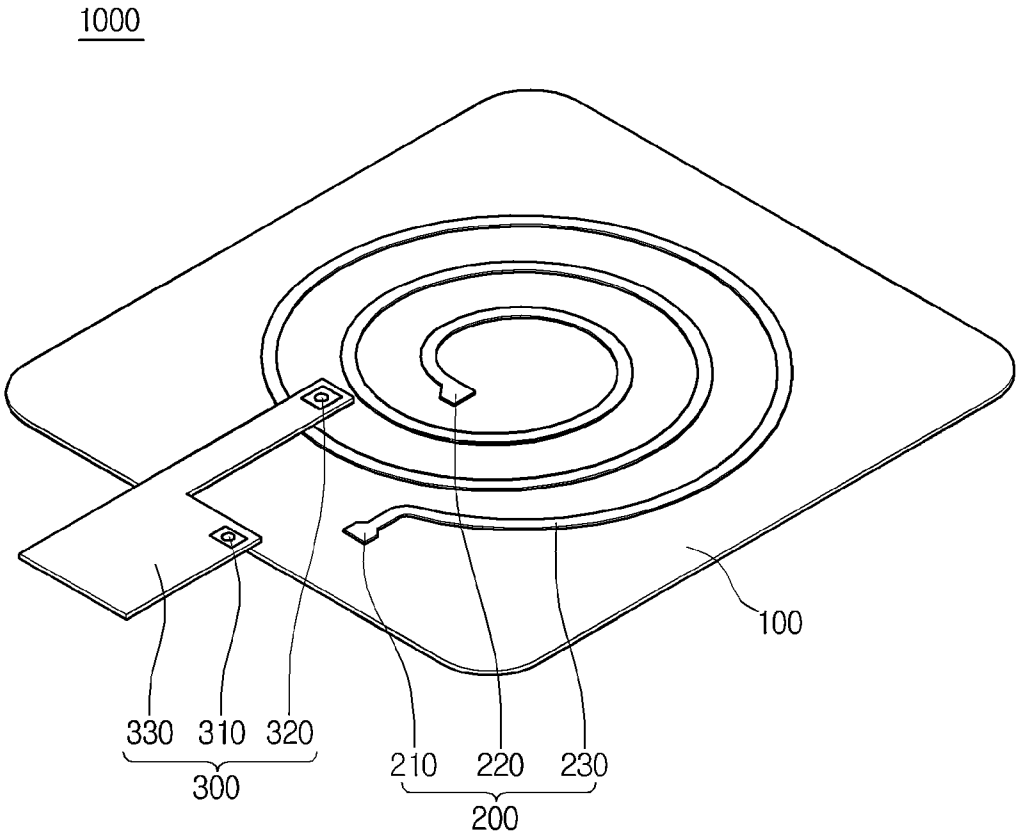

FIG. 1

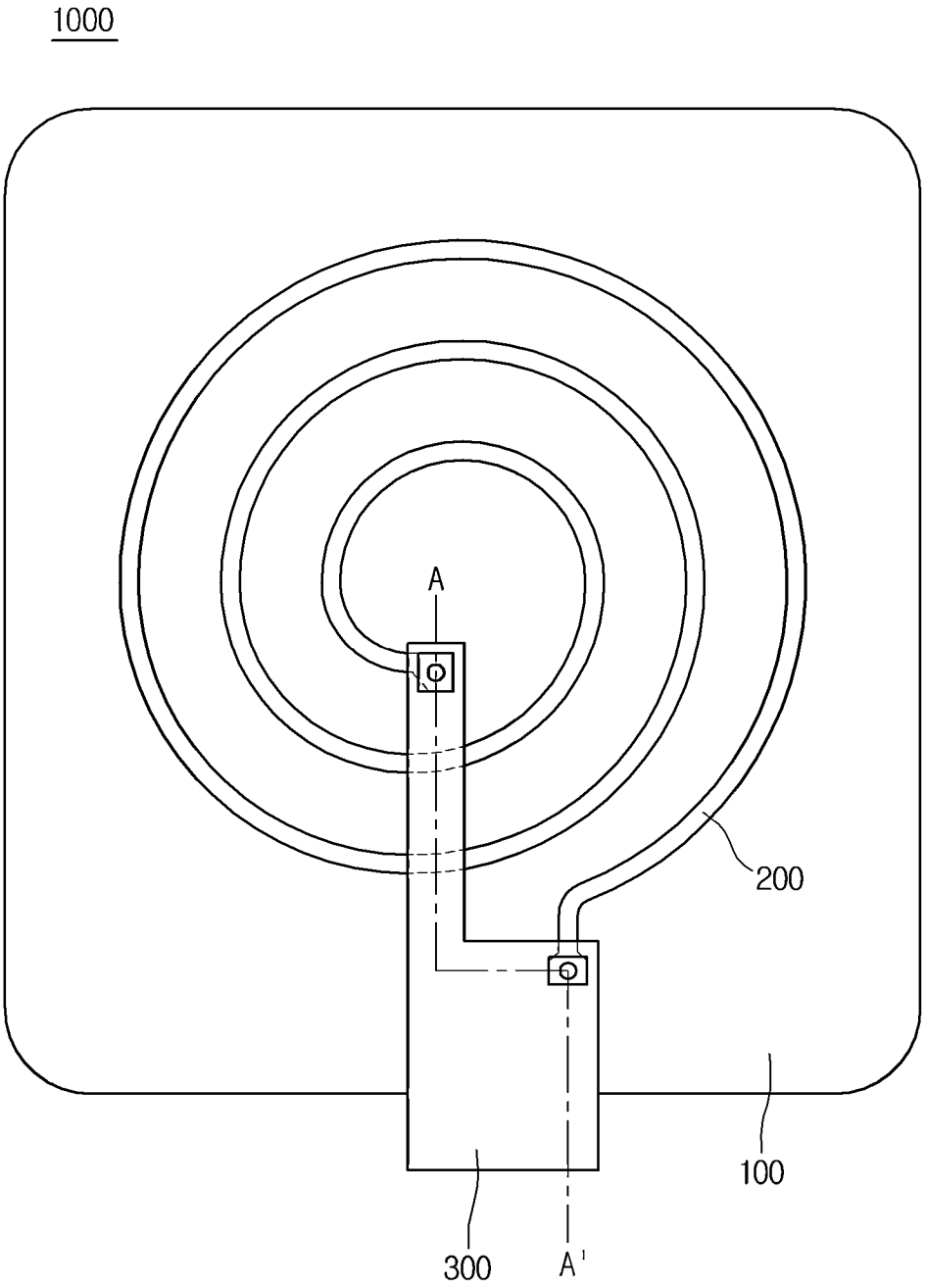

FIG. 2

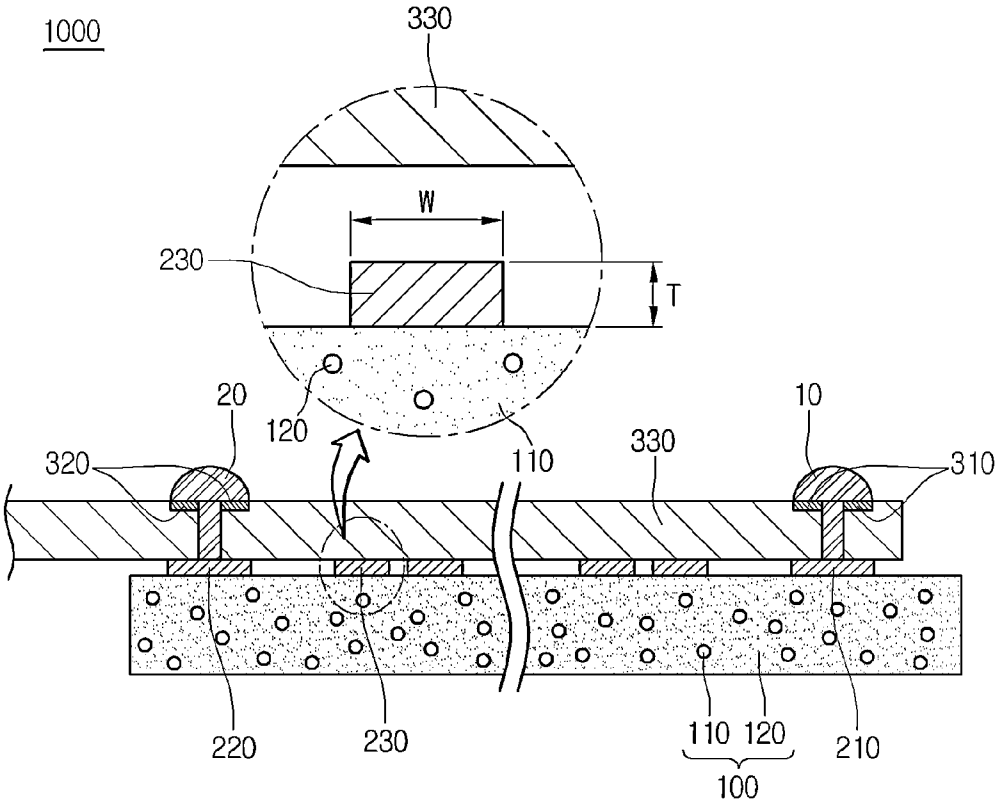
1000
330
W
230
T
20
120
110
330
10
320
310
220
230
110 120
210
100

FIG. 3

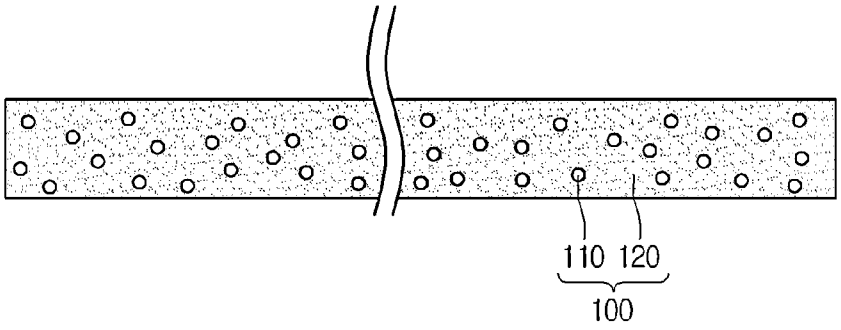
110 120
100

FIG. 4

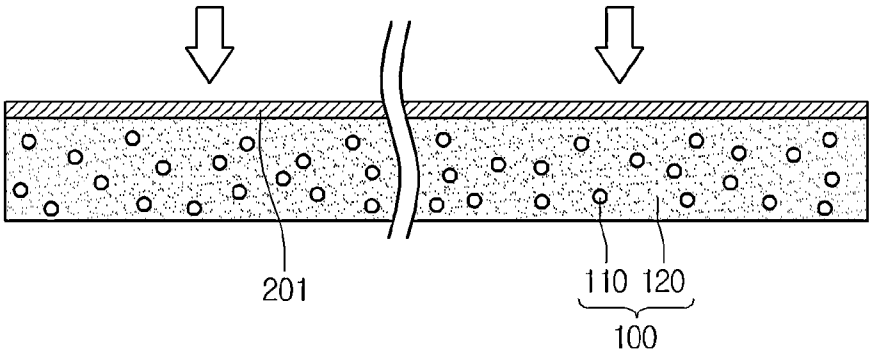

FIG. 5

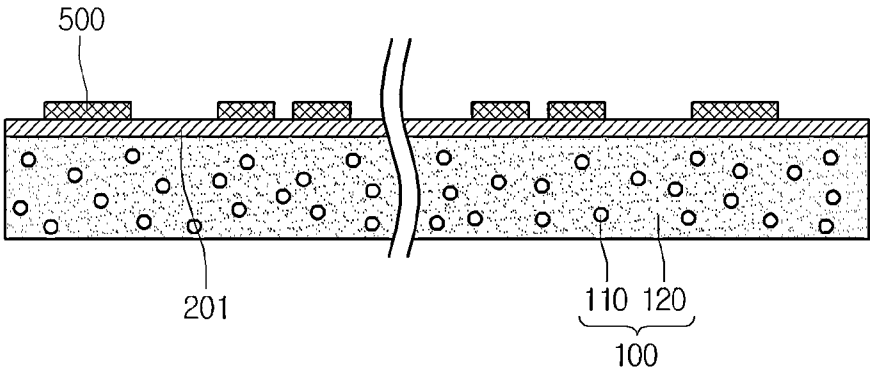

FIG. 6

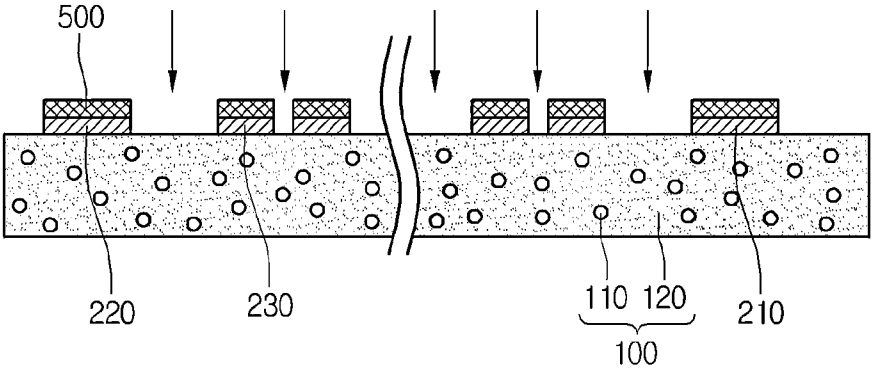

FIG. 7

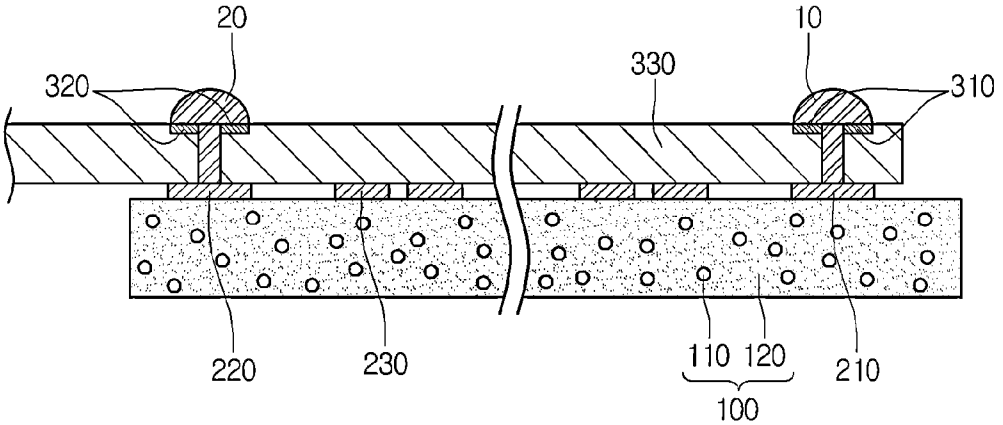
20
10
330
320
310
220
230
110 120
210
100

FIG. 8

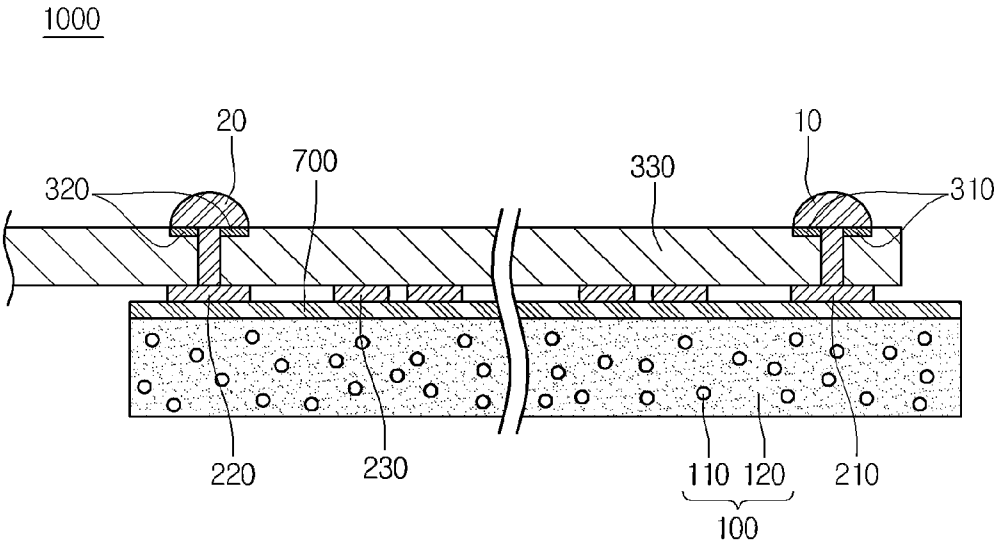
1000
20
10
700
330
320
310
220
230
110 120
210
100

FIG. 9

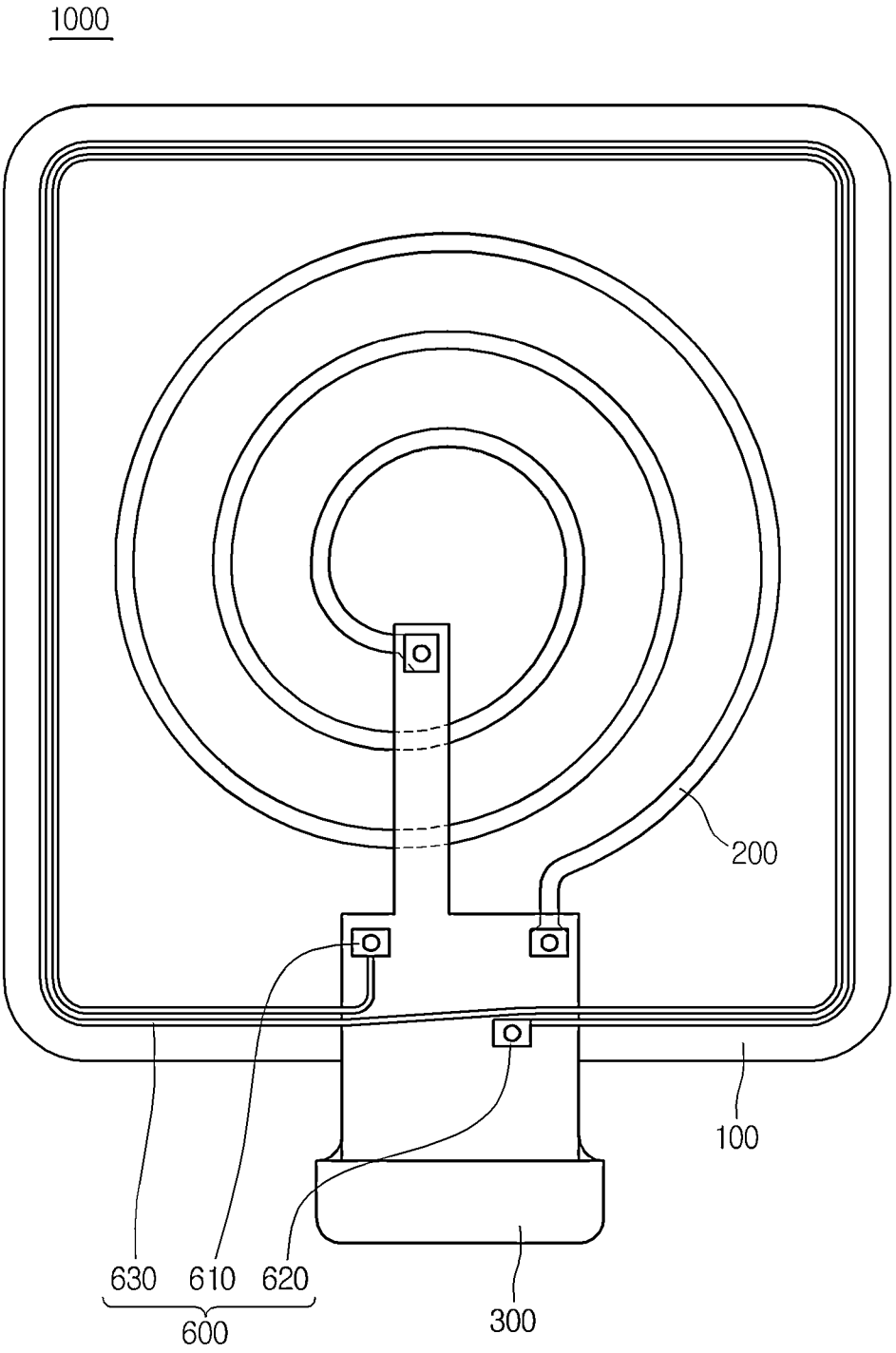

FIG. 10

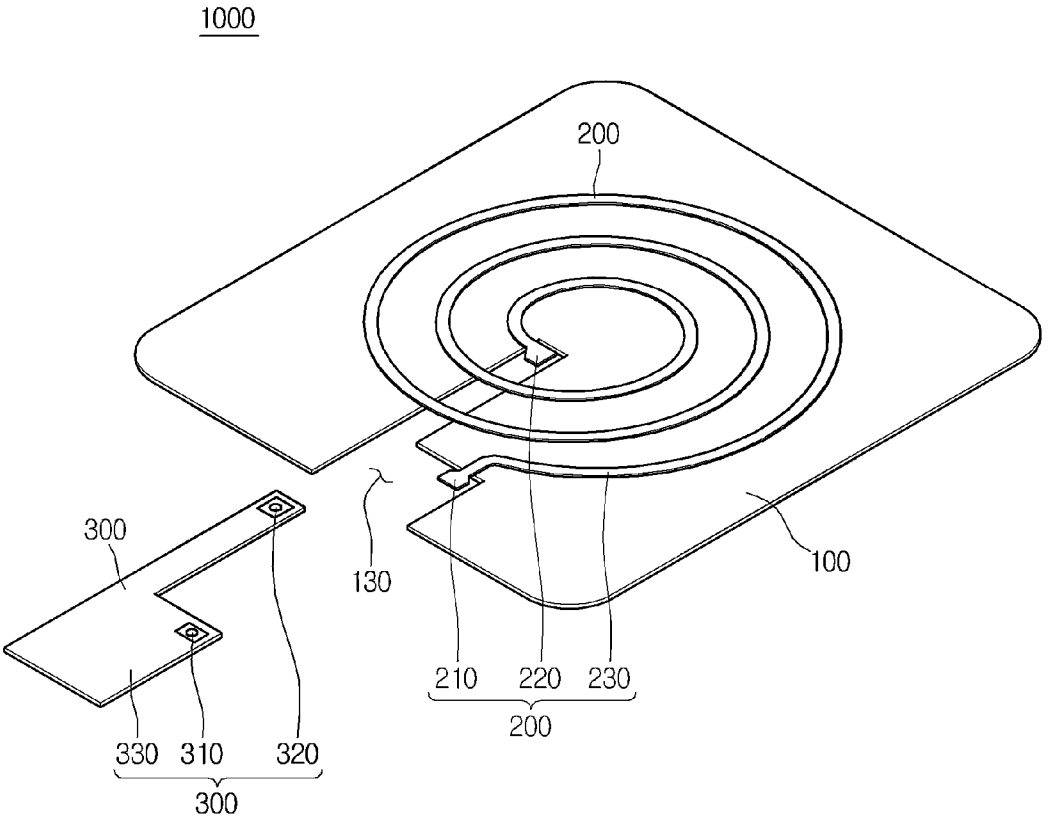

FIG. 11

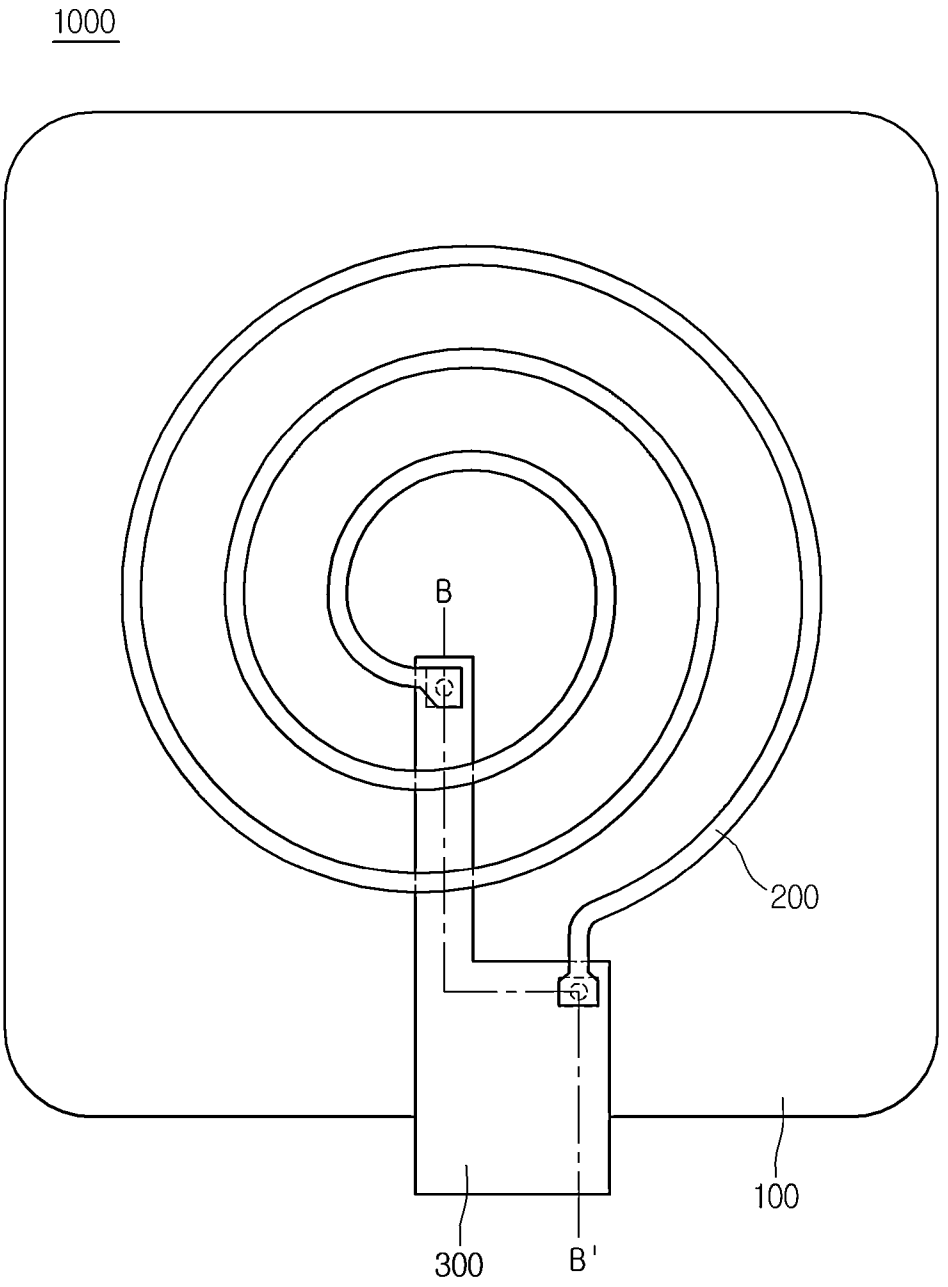

FIG. 12

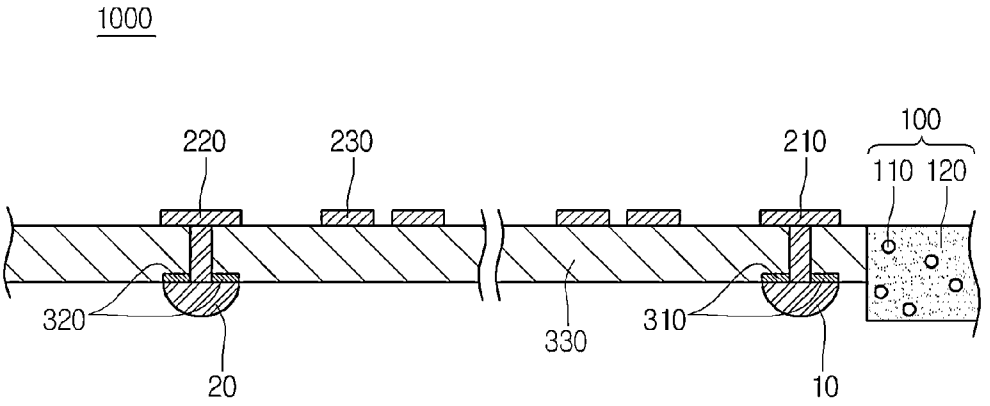
1000
220
230
210
100
110
120
320
330
310
20
10

FIG. 13

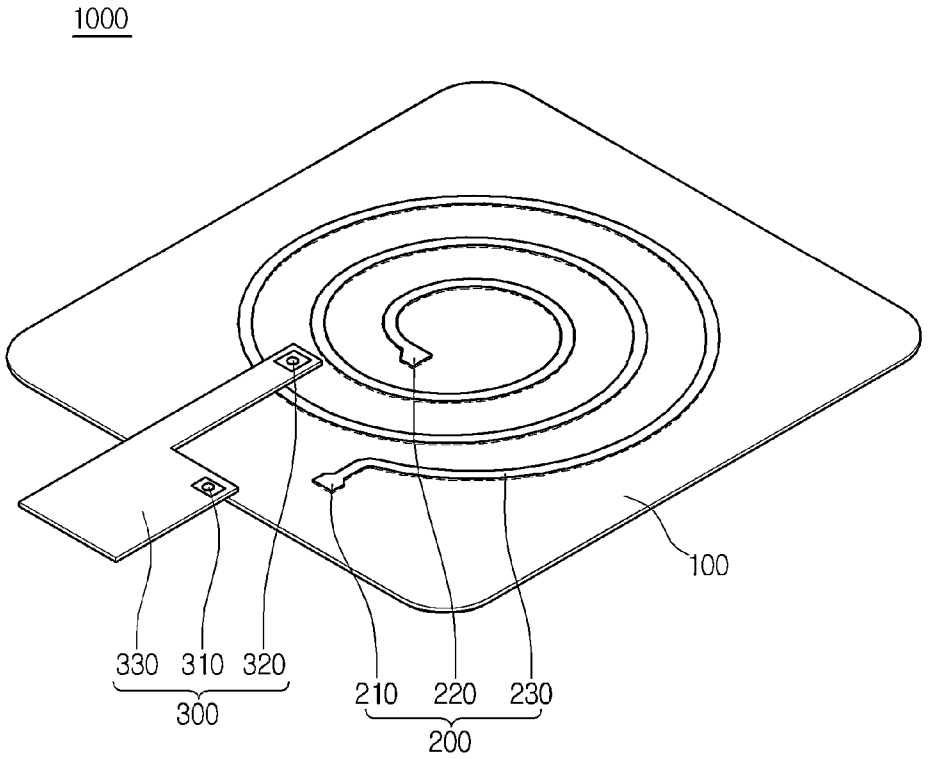
1000
100
330
310
320
300
210
220
230
200

FIG. 14

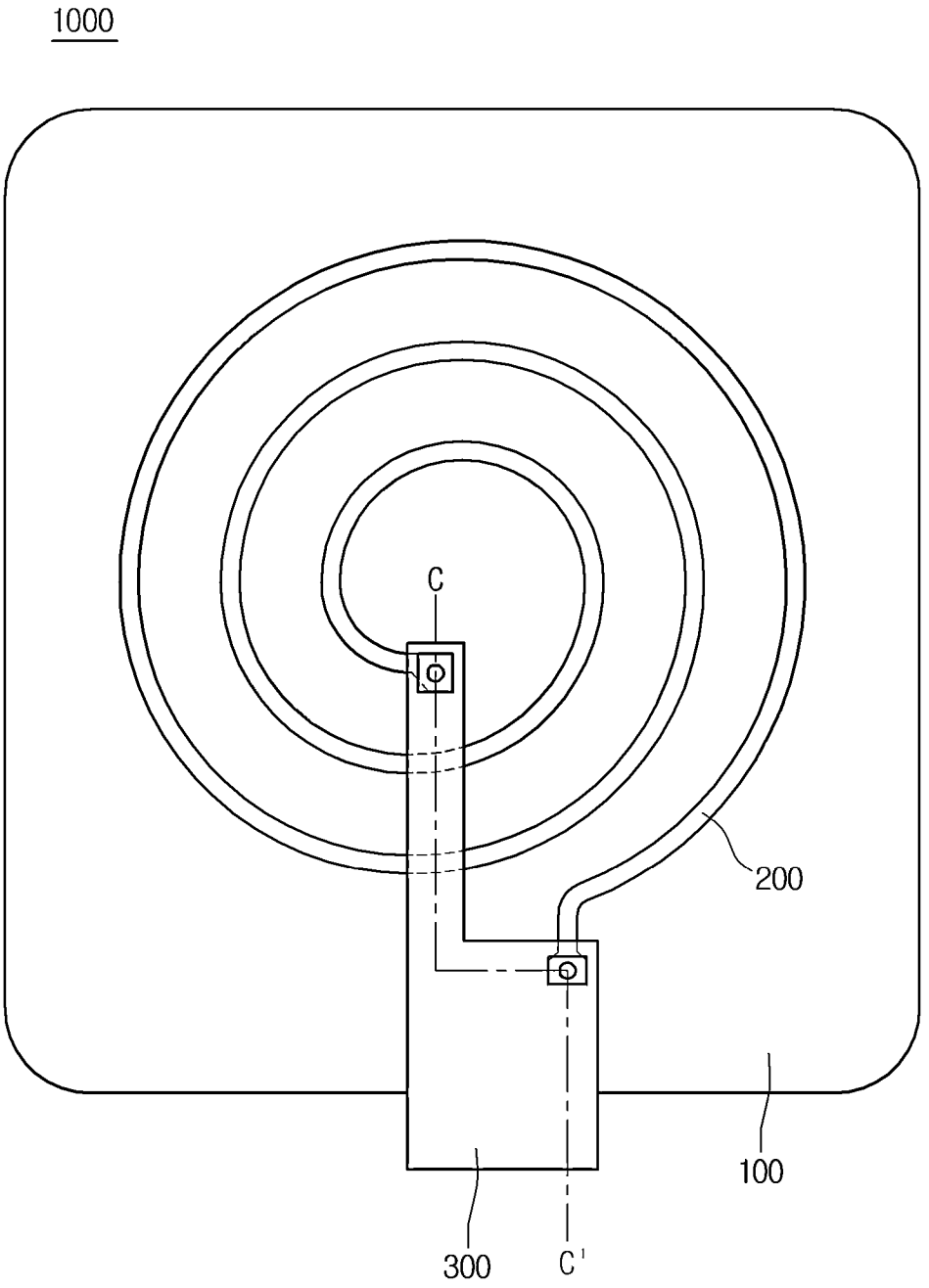

FIG. 15

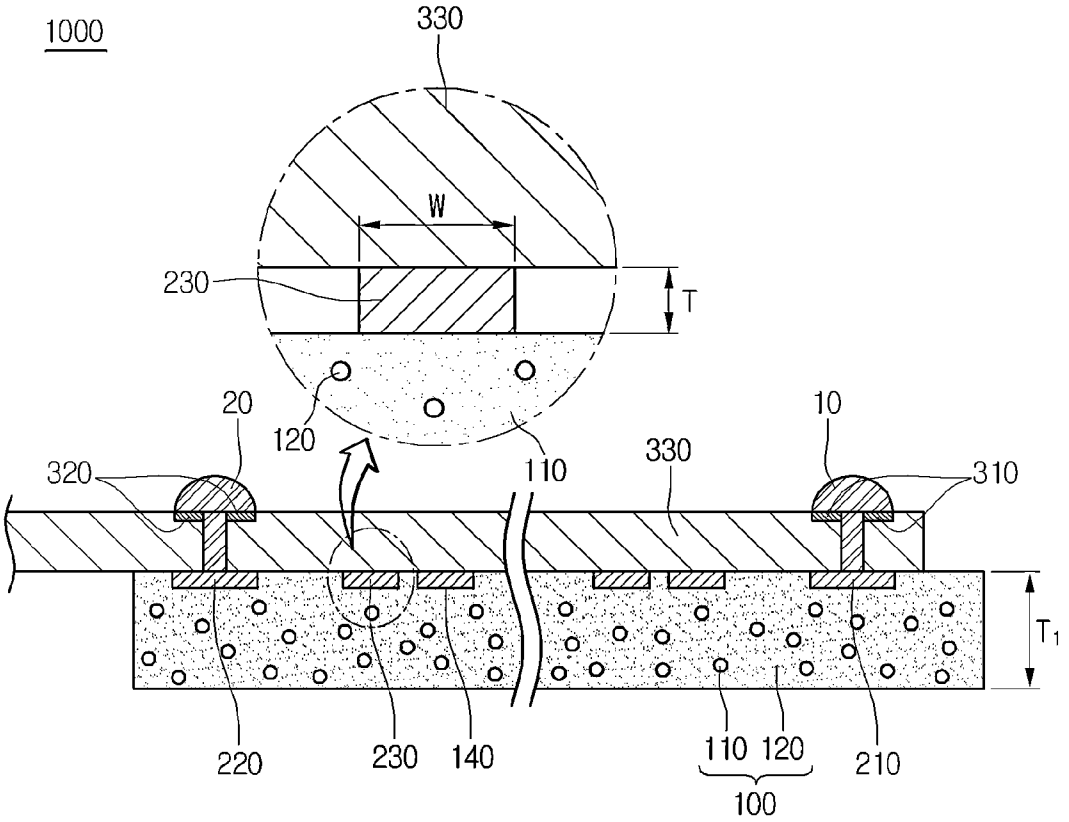
1000
330
W
230
T
20
120
110
330
10
320
310
T1
220
230
140
110 120
210
100

FIG. 16

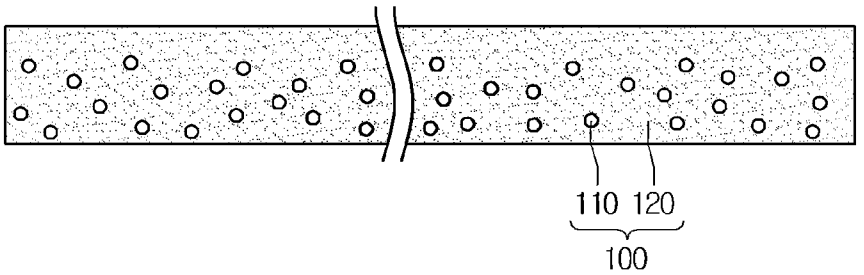
110 120
100

FIG. 17

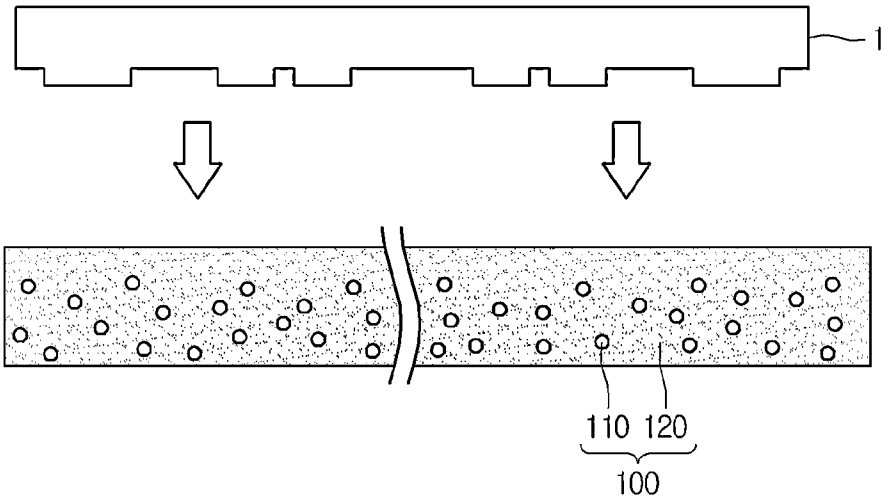

FIG. 18

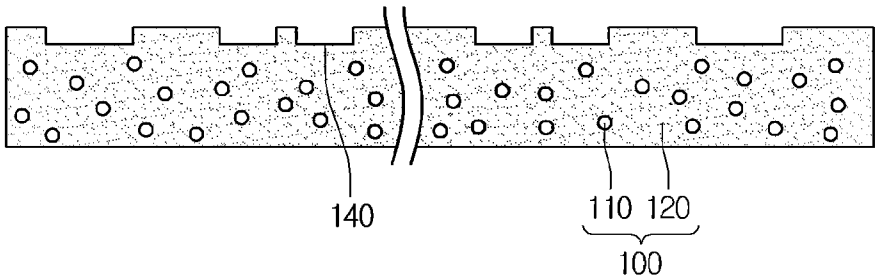

FIG. 19

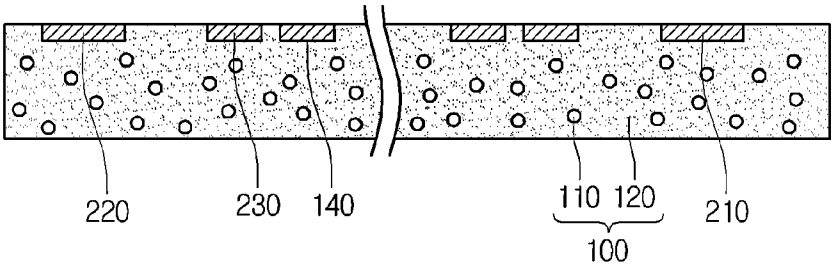
220
230
140
110
120
100
210

FIG. 20

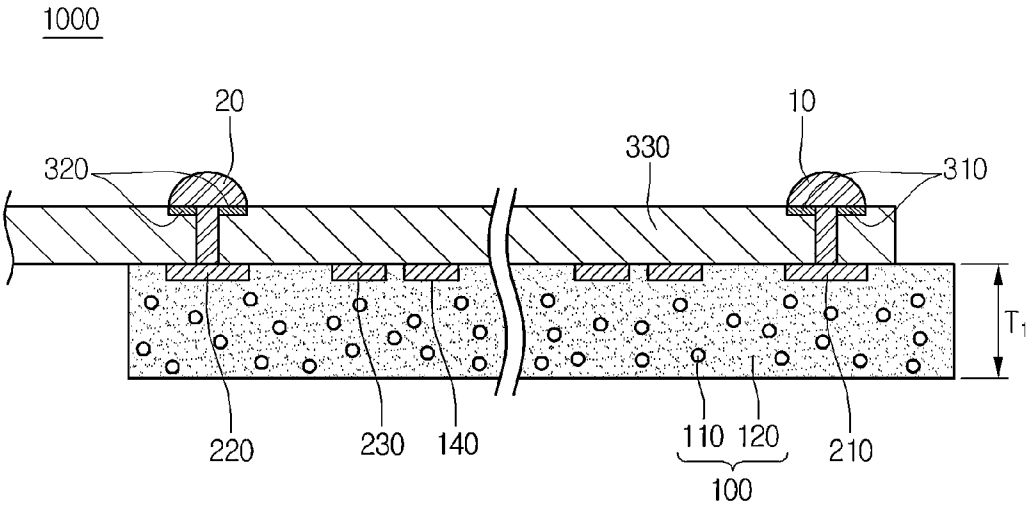
1000
20
10
320
330
310
T1
220
230
140
110
120
100
210

FIG. 21

Freq[kHz]	Inductance Setup1 : Sweep	Resistance Setup1 : Sweep	Q Setup1 : Sweep
130.000000	10023.448082	0.809633	10.012480
131.000000	10021.543951	0.814464	10.028048
132.000000	10019.649417	0.819320	10.043115
133.000000	10017.764376	0.824199	10.057691
134.000000	10015.888496	0.829101	10.071784
135.000000	10014.021426	0.834027	10.085405
136.000000	10012.163025	0.838976	10.098561
137.000000	10010.312867	0.843948	10.111262
138.000000	10008.470902	0.848942	10.123517
139.000000	10006.636764	0.853960	10.135333
140.000000	10004.810399	0.859000	10.146721
141.000000	10002.991358	0.864062	10.157687
142.000000	10001.179585	0.869147	10.168241
143.000000	9999.374809	0.874254	10.178391
144.000000	9997.577015	0.879383	10.188142
145.000000	9995.785687	0.884534	10.197506
146.000000	9994.000944	0.889706	10.206488
147.000000	9992.222542	0.894900	10.215097
148.000000	9990.450319	0.900116	10.223339
149.000000	9988.684063	0.905352	10.231223
150.000000	9986.923648	0.910610	10.238756
151.000000	9985.169040	0.915889	10.245944
152.000000	9983.419964	0.921189	10.252794
153.000000	9981.676290	0.926509	10.259313
154.000000	9979.937950	0.931850	10.265510
155.000000	9978.204783	0.937212	10.271388
156.000000	9976.476722	0.942594	10.276956
157.000000	9974.753596	0.947996	10.282220
158.000000	9973.035485	0.953418	10.287185
159.000000	9971.321833	0.958860	10.291859
160.000000	9969.613051	0.964321	10.296247

FIG. 22

Freq[kHz]	Inductance Setup1 : Sweep	Resistance Setup1 : Sweep	Q Setup1 : Sweep
130.000000	10375.469101	0.760491	11.053420
131.000000	10373.611592	0.764922	11.072242
132.000000	10371.760893	0.769376	11.090493
133.000000	10369.916781	0.773853	11.108182
134.000000	10368.078898	0.778351	11.125322
135.000000	10366.247102	0.782872	11.141920
136.000000	10364.421100	0.787415	11.157989
137.000000	10362.600644	0.791979	11.173537
138.000000	10360.785303	0.796565	11.188574
139.000000	10358.975165	0.801173	11.203109
140.000000	10357.169752	0.805802	11.217153
141.000000	10355.369156	0.810452	11.230713
142.000000	10353.572957	0.815124	11.243801
143.000000	10351.780892	0.819816	11.256422
144.000000	10349.993078	0.824529	11.268591
145.000000	10348.209063	0.829263	11.280309
146.000000	10346.428853	0.834018	11.291589
147.000000	10344.652133	0.838792	11.302441
148.000000	10342.878918	0.843587	11.312871
149.000000	10341.108850	0.848402	11.322886
150.000000	10339.342085	0.853237	11.332499
151.000000	10337.578231	0.858092	11.341712
152.000000	10335.817245	0.862967	11.350536
153.000000	10334.058946	0.867867	11.358980
154.000000	10332.303299	0.872774	11.367050
155.000000	10330.550019	0.877706	11.374754
156.000000	10328.799305	0.882658	11.382099
157.000000	10327.050748	0.887629	11.389091
158.000000	10325.304351	0.892618	11.395741
159.000000	10323.560143	0.897626	11.402053
160.000000	10321.817935	0.902653	11.408035

FIG. 23

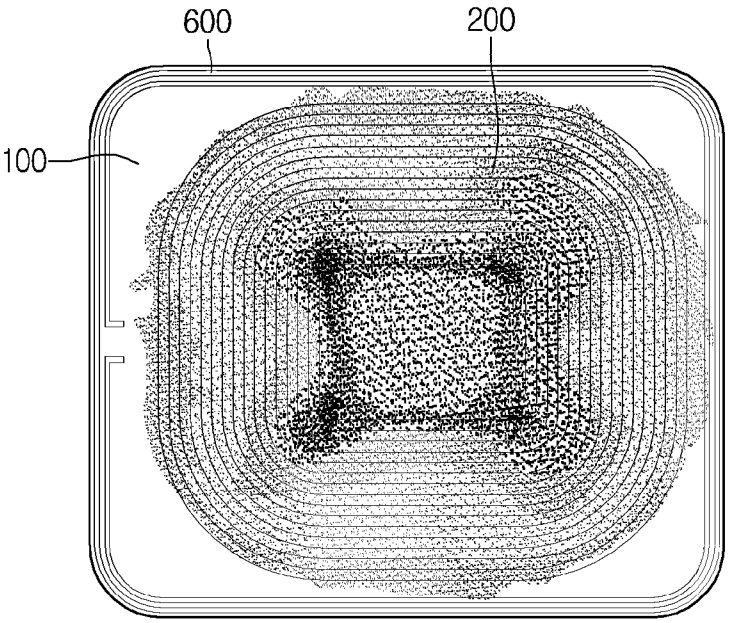

FIG. 24

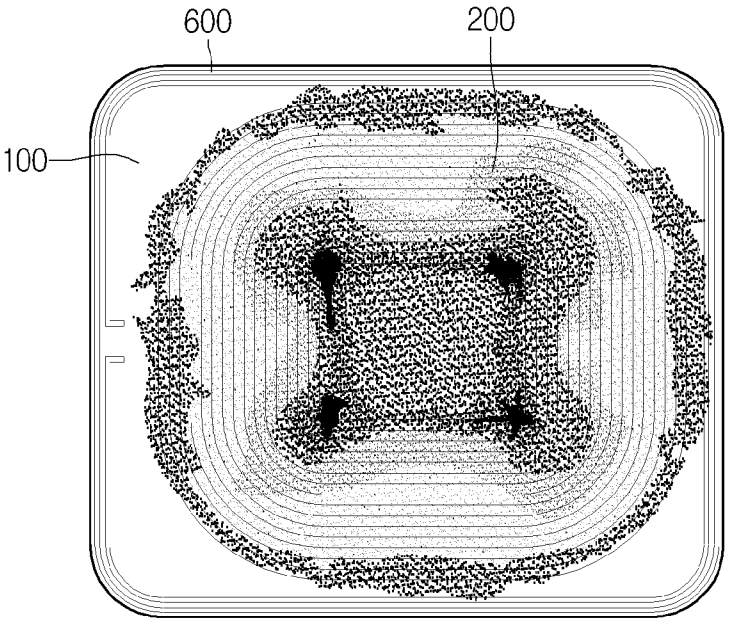

FIG. 25

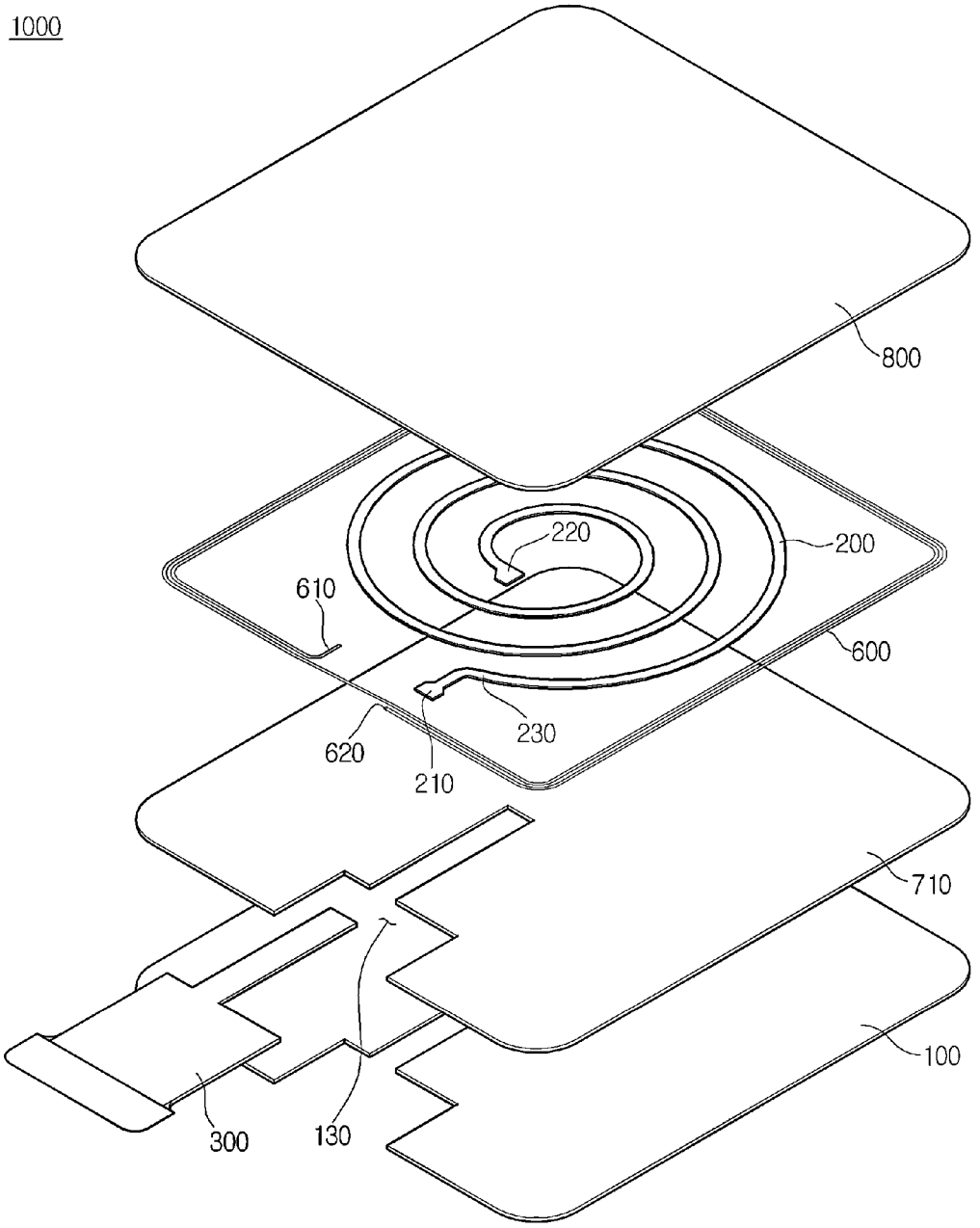

FIG. 26

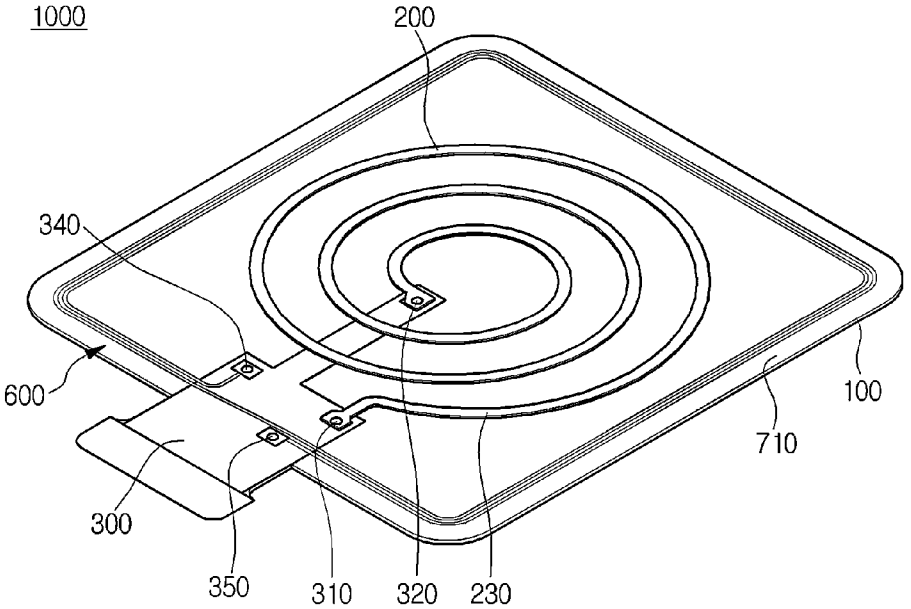
1000
200
340
600
100
710
300
350
310
320
230

FIG. 27

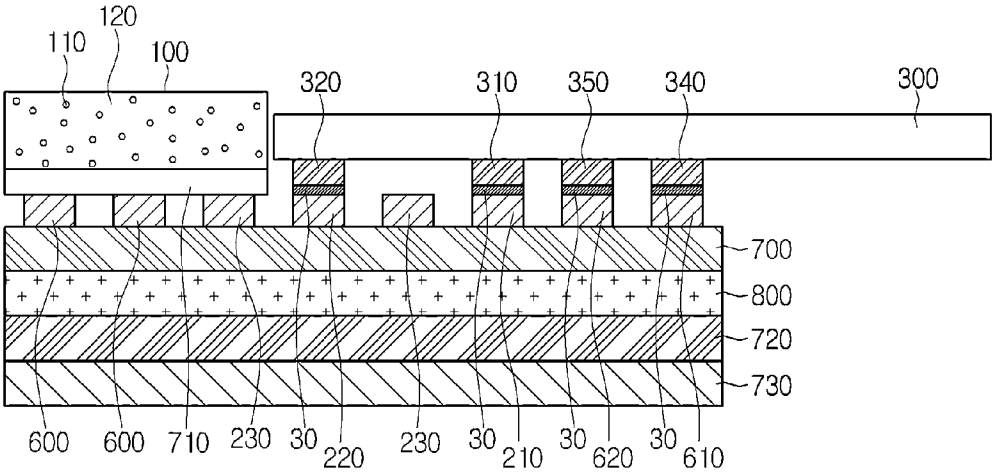
120
110
100
320
310
350
340
300
700
800
720
730
600
600
710
230
30
220
230
30
210
30
620
30
610

FIG. 28

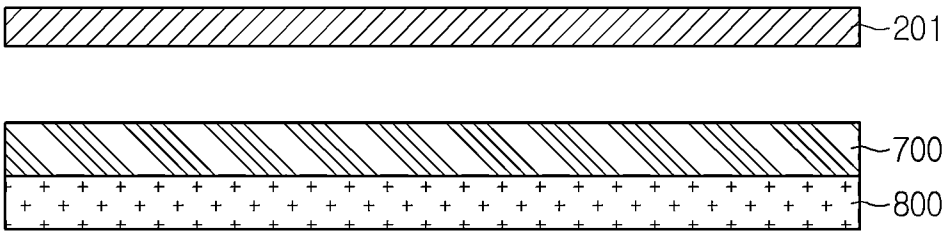

FIG. 29

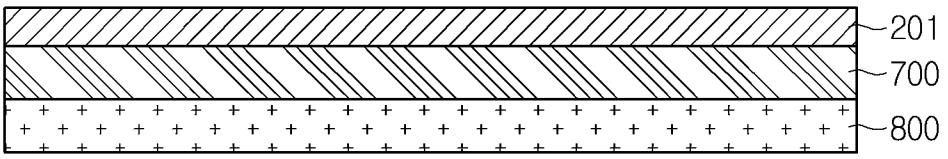

FIG. 30

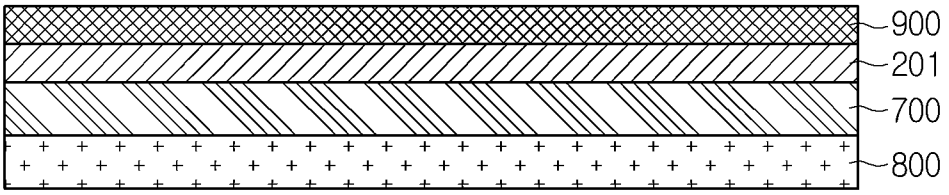

FIG. 31

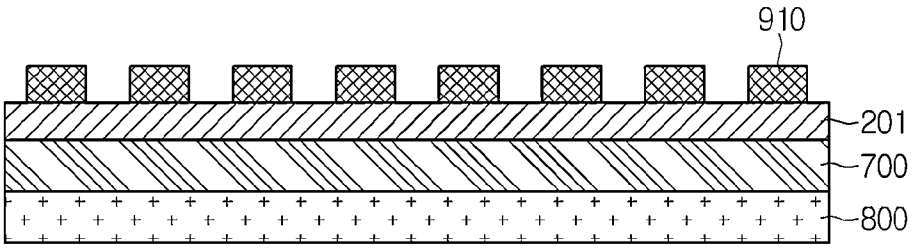

FIG. 32

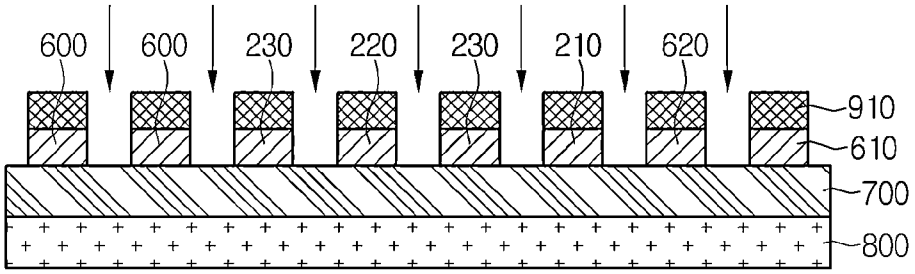

FIG. 33

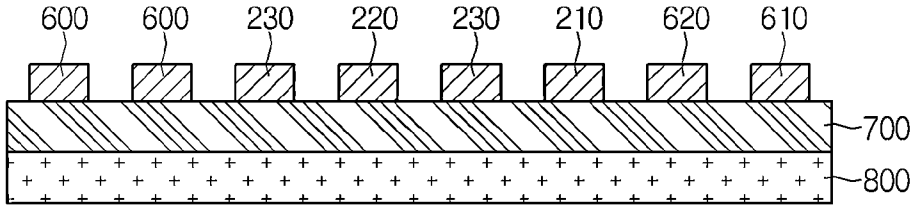

FIG. 34

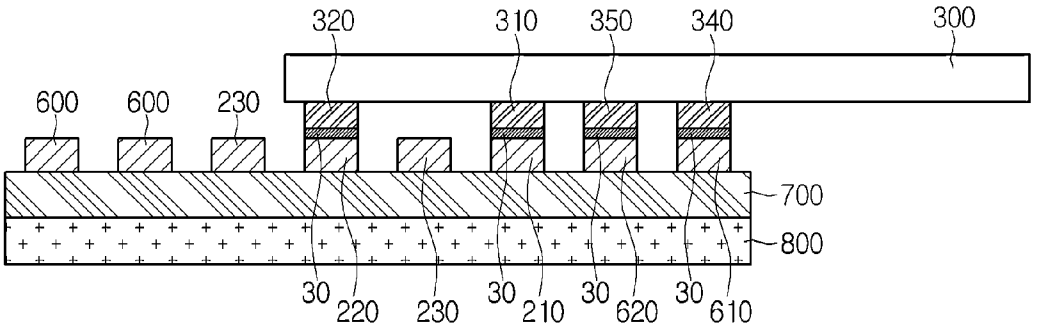
320
310
350
340
300
600
600
230
700
800
30
220
230
30
210
30
620
30
610

FIG. 35

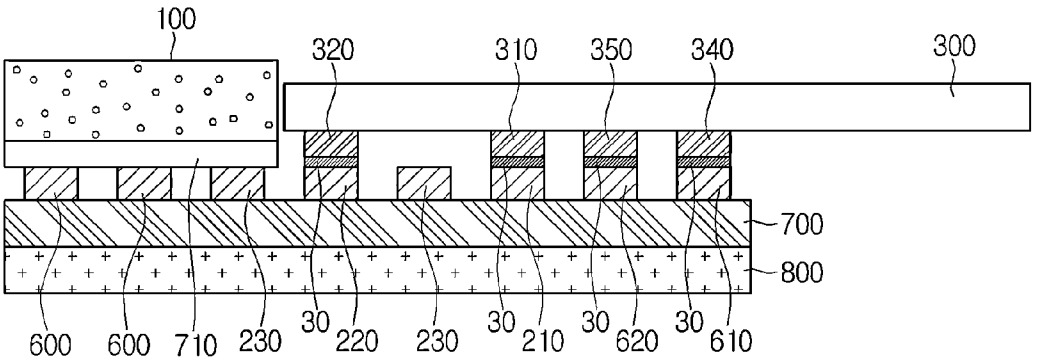
100
320
310
350
340
300
700
800
600
600
710
230
30
220
230
30
210
30
620
30
610

FIG. 36

WIRELESS POWER RECEIVER AND METHOD OF MANUFACTURING THE SAME

CROSS-REFERENCE TO RELATED APPLICATIONS

[0001] This application claims the benefit under 35 U.S.C §119 of Korean Patent Application Nos. 10-2012-0029987, filed Mar. 23, 2012, and 10-2012-0079004, filed Jul. 19, 2012, which are hereby incorporated by reference in their entirety.

BACKGROUND

[0002] The embodiment relates to a wireless power receiver and a method of manufacturing the same. In more particular, the embodiment relates to a wireless power receiver used for wireless power transmission or an antenna to reduce a thickness of the wireless power receiver and to simplify the manufacturing process thereof and a method of manufacturing the same.

[0003] A wireless power transmission or a wireless energy transfer refers to a technology of wirelessly transferring electric energy to desired devices. In the 1800's, an electric motor or a transformer employing the principle of electromagnetic induction has been extensively used and then a method of transmitting electrical energy by irradiating electromagnetic waves, such as radio waves or lasers, has been suggested. Actually, electrical toothbrushes or electrical razors, which are frequently used in daily life, are charged based on the principle of electromagnetic induction. The electromagnetic induction refers to the generation of an electric current through induction of a voltage when a magnetic field is changed around a conductor. The electromagnetic induction scheme has been successfully commercialized for electronic appliances having small sizes, but represents a problem in that the transmission distance of power is too short.

[0004] Besides the electromagnetic induction scheme, the long-distance transmission using the resonance and the short-wavelength radio frequency has been suggested as the wireless energy transfer scheme.

[0005] However, in general, a wireless power receiver disposed in a terminal has a thick thickness and the manufacturing process thereof is complicated.

BRIEF SUMMARY

[0006] An embodiment provides a method capable of remarkably reducing a thickness of a wireless power receiver by directly disposing a coil unit on a top surface of a magnetic substrate.

[0007] An embodiment provides a method capable of ensuring high power transmission efficiency and enabling communication with external devices by directly disposing a coil unit and a near field communication antenna on a top surface of a magnetic substrate.

[0008] An embodiment provides a method capable of simplifying the manufacturing process for a wireless power receiver by directly disposing a coil unit on a magnetic substrate.

[0009] An embodiment provides a method capable of remarkably reducing a thickness of a wireless power receiver by disposing a coil unit inside a magnetic substrate.

[0010] An embodiment provides a method capable of ensuring high power transmission efficiency and enabling communication with external devices by disposing a coil unit inside a magnetic substrate and a near field communication antenna on a magnetic substrate.

[0011] An embodiment provides a method capable of simplifying the manufacturing process for a wireless power receiver by disposing a coil unit inside a magnetic substrate.

[0012] A wireless power receiver according to one embodiment includes a magnetic substrate and a coil configured to wirelessly receive power, wherein the coil is formed as a conductive layer on the magnetic substrate.

[0013] A wireless power receiver according to one embodiment includes a magnetic substrate and a coil a coil configured to wirelessly receive power, wherein the coil is formed as a conductive layer at the magnetic substrate, wherein a part of the coil is disposed inside the magnetic substrate.

[0014] A method of manufacturing a wireless power receiver for wirelessly receiving power according to one embodiment includes forming a conductor on a protective film, forming a conductive pattern by etching the conductor, connecting a connecting unit to be connected to an external circuit to a connection terminal of the conductive pattern, obtaining a magnetic substrate having a receiving space of a predetermined shape corresponding to the connecting unit and disposing the magnetic substrate on the conductive pattern while positioning the connecting unit in the receiving space.

[0015] According to one embodiment, the thickness of the wireless power receiver can be remarkably reduced by directly disposing the coil unit on a top surface of the magnetic substrate. According to one embodiment, the high power transmission efficiency can be ensured and communication with external devices can be enabled by directly disposing the coil unit and the near field communication antenna on the top surface of the magnetic substrate.

[0016] According to one embodiment, the manufacturing process for the wireless power receiver can be simplified by directly disposing the coil unit on the magnetic substrate only through laminating and etching processes.

[0017] According to one embodiment, the thickness of the wireless power receiver can be remarkably reduced by forming the conductive pattern inside the magnetic substrate.

[0018] According to one embodiment, the high power transmission efficiency can be ensured by forming the conductive pattern inside the magnetic substrate and the communication with external devices can be enabled by using the near field communication antenna.

[0019] According to one embodiment, the connecting unit is disposed in the receiving space of the magnetic substrate so that the thickness of the wireless power receiver can be remarkably reduced as much as the thickness of the connecting unit.

[0020] According to one embodiment, a tape substrate is used as the connecting unit so that the overall size of the wireless power receiver can be reduced.

[0021] According to one embodiment, a lead frame is used as the connecting unit, so the wiring layer included in the connecting unit can be protected from the heat, external moisture or impact and the mass production can be realized.

[0022] According to one embodiment, the magnetic field directed to the outside can be changed into the coil unit due to the conductive pattern formed in the magnetic substrate, so the power transmission efficiency can be improved, at the same time, the amount of the magnetic field leaked to the outside can be reduced so that the bad influence of the magnetic field exerted to the human body can be diminished.

[0023] According to one embodiment, the wireless power receiver can be manufactured only through the processes of forming the pattern groove and inserting the coil unit, so that the manufacturing process can be simplified.

[0024] Other various effects of the embodiments will be disclosed directly or indirectly in the detailed description of the embodiments.

BRIEF DESCRIPTION OF THE DRAWINGS

[0025] FIG. **1** is a perspective view illustrating a wireless power receiver **1000** according to the first embodiment;

[0026] FIG. **2** is a plan view illustrating a wireless power receiver **1000** according to the first embodiment;

[0027] FIG. **3** is a sectional view taken along line A-A' of a connecting unit **300** of a wireless power receiver **1000** shown in FIG. **2**;

[0028] FIGS. **4** to **8** are views for explaining a method of manufacturing a wireless power receiver **1000** according to one embodiment;

[0029] FIG. **9** is a sectional view taken along line A-A' of a connecting unit **300** of a wireless power receiver **1000** shown in FIG. **2** according to the second embodiment;

[0030] FIG. **10** is a plan view illustrating a wireless power receiver **1000** according to the third embodiment;

[0031] FIG. **11** is a perspective view illustrating a wireless power receiver **1000** according to the fourth embodiment;

[0032] FIG. **12** is a plan view illustrating a wireless power receiver **1000** according to the fourth embodiment;

[0033] FIG. **13** is a sectional view taken along line B-B' of a connecting unit **300** of a wireless power receiver **1000** shown in FIG. **12** according to the fourth embodiment;

[0034] FIG. **14** is a perspective view illustrating a wireless power receiver **1000** according to the fifth embodiment;

[0035] FIG. **15** is a plan view illustrating a wireless power receiver **1000** according to the fourth embodiment;

[0036] FIG. **16** is a sectional view taken along line C-C' of a wireless power receiver **1000** according to the fifth embodiment;

[0037] FIGS. **17** to **21** are views for explaining a method of manufacturing a wireless power receiver **1000** according to the fifth embodiment;

[0038] FIG. **22** is a view for explaining variation of inductance, resistance and Q values of a coil unit **200** as a function of a usable frequency when the coil unit **200** is disposed on a top surface of a magnetic substrate according to the first embodiment;

[0039] FIG. **23** is a view for explaining variation of inductance, resistance and Q values of a coil unit **200** as a function of a usable frequency when the coil unit **200** is disposed in a pattern groove formed in a magnetic substrate according to the fifth embodiment;

[0040] FIG. **24** is an H-field for illustrating a radiation pattern of a magnetic field when a coil unit is disposed on a top surface of a magnetic substrate according to the first embodiment;

[0041] FIG. **25** is an H-field for illustrating a radiation pattern of a magnetic field when a coil unit is disposed in a pattern groove formed in a magnetic substrate according to the fifth embodiment;

[0042] FIG. **26** is an exploded perspective view of a wireless power receiver **1000** according to still another embodiment;

[0043] FIG. **27** is a perspective view of a wireless power receiver **1000** according to still another embodiment;

[0044] FIG. **28** is a sectional view of a wireless power receiver **1000** according to still another embodiment; and

[0045] FIGS. **29** to **36** are views for explaining a method of manufacturing a wireless power receiver according to still another embodiment.

DETAILED DESCRIPTION

[0046] Hereinafter, exemplary embodiments will be described in detail with reference to accompanying drawings so that those skilled in the art can easily work with the embodiments.

[0047] Hereinafter, "conductive pattern" refers to the shape of a conductive layer and may be used to refer to a structure formed by a patterning process. "conductive layer" may be used interchangeably with "conductive pattern" and refers to a structure formed by methods including patterning, etching, deposing, selective plating, and the like.

[0048] FIG. **1** is a perspective view illustrating a wireless power receiver **1000** according to the first embodiment, FIG. **2** is a plan view illustrating the wireless power receiver **1000** according to the first embodiment and FIG. **3** is a sectional view taken along line A-A' of a connecting unit **300** of the wireless power receiver **1000** shown in FIG. **2**.

[0049] Referring to FIGS. **1** to **3**, the wireless power receiver **1000** may include a magnetic substrate **100**, a coil unit **200** and a connecting unit **300**.

[0050] The wireless power receiver **1000** may wirelessly receive power from a transmission side. According to one embodiment, the wireless power receiver **1000** may wirelessly receive the power using electromagnetic induction. According to one embodiment, the wireless power receiver **1000** may wirelessly receive the power using resonance.

[0051] The electromagnetic induction and resonance may be used when transmitting the power using the magnetic field.

[0052] The magnetic substrate **100** may change the direction of the magnetic field received from the transmission side.

[0053] The magnetic substrate **100** can reduce the amount of the magnetic field to be leaked to the outside by changing the direction of the magnetic field received from the transmission side.

[0054] In detail, the magnetic substrate **100** changes the direction of the magnetic field transferred from the transmission side in the lateral direction such that the magnetic field can be more concentrated onto the coil unit **200**.

[0055] The magnetic substrate **100** can absorb some of the magnetic field received from the transmission side and leaked to the outside to dissipate the magnetic field as heat. If the amount of the magnetic field leaked to the outside is reduced, the bad influence of the magnetic field exerted on the human body can be reduced.

[0056] Referring to FIG. **3**, the magnetic substrate **100** may include a magnet **110** and a support **120**.

[0057] The magnet **110** may include a particle or a ceramic.

[0058] The support **120** may include thermosetting resin or thermoplastic resin.

[0059] The magnetic substrate **100** may be prepared in the form of a sheet and may have a flexible property.

[0060] Referring again to FIG. **1**, the coil unit **200** may include a first connection terminal **210**, a second connection terminal **220** and a coil **230**. The coil **230** may be formed as a conductive layer or a conductive pattern.

[0061] The first connection terminal **210** is located at one end of the coil **230** and the second connection terminal **220** is provided at the other end of the coil **230**.

[0062] The first and second connection terminals **210** and **220** are necessary for connection with the connecting unit **300**.

[0063] The coil **230** may be formed as a conductive pattern which is obtained by winding a conductive line several times. According to one embodiment, when viewed from the top, the coil pattern may have a spiral shape. However, the embodiment is not limited thereto, and various patterns may be formed.

[0064] The coil unit **200** can be directly disposed on the top surface of the magnetic substrate **100**. According to one embodiment, an adhesive layer (not shown) may be disposed between the coil unit **200** and the magnetic substrate **100**.

[0065] The coil unit **200** may include a conductor. The conductor may include a metal or an alloy. According to one embodiment, the metal may include silver or copper, but the embodiment is not limited thereto.

[0066] The coil unit **200** may transfer the power, which is wirelessly received from the transmission side, to the connecting unit **300**. The coil unit **200** can receive the power from the transmission side using the electromagnetic induction or resonance.

[0067] The connecting unit **300** may include a first connection terminal **310**, a second connection terminal **320** and a printed circuit board **330**.

[0068] The first connection terminal **310** of the connecting unit **300** may be connected to the first connection terminal **210** of the coil unit **200** and the second connection terminal **320** of the connecting unit **300** may be connected to the second connection terminal **220** of the coil unit **200**.

[0069] The printed circuit board **330** may include a wiring layer and a receiver circuit, which will be described later, may be disposed on the wiring layer.

[0070] The connecting unit **300** connects the wireless power receiving circuit (not shown) with the coil unit **200** to transfer the power received from the coil unit **200** to a load (not shown) through the wireless power receiving circuit. The wireless power receiving circuit may include a rectifier circuit for converting AC power into DC power and a smoothing circuit for transferring the DC power to the load after removing ripple components from the DC power.

[0071] FIGS. **2** and **3** are views for explaining the structure of the wireless power receiver **1000** according to the first embodiment in detail when the coil unit **200** is connected with the connecting unit **300**.

[0072] FIG. **2** is a plan view illustrating the wireless power receiver **1000** according to the first embodiment.

[0073] FIG. **2** shows the coil unit **200** connected with the connecting unit **300**.

[0074] According to one embodiment, the connection between the coil unit **200** and the connecting unit **300** may be achieved by a solder. In detail, the first connection terminal **210** of the coil unit **200** may be connected to the first connection terminal **310** of the connecting unit **300** through a first solder **10** and the second connection terminal **220** of the coil unit **200** may be connected to the second connection terminal **320** of the connecting unit **300** through a second solder **20**. In more detail, the first connection terminal **210** of the coil unit **200** may be connected to the first connection terminal **310** of the connecting unit **300** through a via hole of the first solder **10** and the second connection terminal **220** of the coil unit **200** may be connected to the second connection terminal **320** of the connecting unit **300** through a via hole of the second solder **20**.

[0075] The wireless power receiver **1000** shown in FIG. **2** may be equipped in an electronic appliance, such as a terminal.

[0076] The terminal may include a typical mobile phone, such as a cellular phone, a PCS (personal communication service) phone, a GSM phone, a CDMA-2000 phone, or a WCDMA phone, a PMP (portable multimedia player), a PDA (personal digital assistant), a smart phone, or an MBS (mobile broadcast system) phone, but the embodiment is not limited thereto. Various devices can be used as the terminal if they can wirelessly receive the power.

[0077] A section taken along line A-A' of the connecting unit **300** shown in FIG. **2** will be explained with reference to FIG. **3**.

[0078] FIG. **3** is a sectional view taken along line A-A' of the connecting unit **300** of the wireless power receiver **1000** shown in FIG. **2**.

[0079] Referring to FIG. **3**, the first connection terminal **210**, the second connection terminal **220** and the coil **230** constituting the coil unit **200** are disposed on the top surface of the magnetic substrate **100**.

[0080] In the wireless power receiver **1000** according to the first embodiment, the coil unit **200** is directly disposed on the top surface of the magnetic substrate **100**, so the overall thickness can be remarkably reduced when comparing with the case in which the coil pattern is formed on an FPCB.

[0081] Preferably, the magnetic substrate **100** has a thickness of 0.43 mm and the coil unit **200** has a thickness of 0.1 mm, so the overall thickness is 0.53 mm. However, this numerical value is illustrative purpose only.

[0082] That is, the thickness of the wireless power receiver **1000** can be reduced by preparing the coil unit **200** in the form of a conductor, a conductive pattern or a thin film. Since the current trend has tended toward the slimness, if the wireless power receiver **1000** is applied to the electronic device, such as the portable terminal, the overall thickness of the portable terminal can be reduced and the power can be effectively received from the transmission side.

[0083] The connecting unit **300** is directly disposed on the coil unit **200**. Since the connecting unit **300** is directly disposed on the coil unit **200**, the coil unit **200** can be readily connected with the connecting unit **300**.

[0084] The first connection terminal **210** of the coil unit **200** is connected to the first connection terminal **310** of the connecting unit **300** through the solder **10**.

[0085] The second connection terminal **220** of the coil unit **200** is connected to the second connection terminal **320** of the connecting unit **300** through the solder **20**.

[0086] The coil **230** may be designed to have a predetermined width W and a predetermined thickness T. In addition, the coil **230** can be designed to have a predetermined winding interval.

[0087] FIGS. **4** to **8** are views for explaining a method of manufacturing the wireless power receiver **1000** according to one embodiment.

[0088] The structure of the wireless power receiver **1000** may be essentially identical to the structure of the wireless power receiver **1000** described with reference to FIGS. **1** to **3**.

[0089] First, referring to FIG. **4**, the magnetic substrate **100** is prepared.

[0090] Then, referring to FIG. **5**, a conductor **201** is directly laminated on the top surface of the magnetic substrate **100**. According to one embodiment, the conductor **201** may be

laminated after the adhesive layer has been laminated on the top surface of the magnetic substrate **100**.

[0091] According to one embodiment, a laminating process can be used to form the conductor **201** on the top surface of the magnetic substrate **100**. According to the laminating process, the conductor **201** is heated at the predetermined temperature and then predetermined pressure is applied to the conductor **201**. The laminating process refers to a process of forming heterogeneous materials, such as a metal foil and a paper, by using heat and pressure.

[0092] Then, referring to FIG. **6**, a mask **500** is laminated on the top surface of the conductor **201**. The mask **500** may be selectively formed on the top surface of the conductor **201** corresponding to positions of the first connection terminal **210**, the second connection terminal **220** and the coil **230** of the coil unit **200**.

[0093] After that, referring to FIG. **7**, the structure shown in FIG. **6** is immersed in an etchant so that portions of the conductor **201** where the mask **500** is not positioned may be etched. Thus, the conductor **201** may have a predetermined conductive pattern.

[0094] Then, the coil unit **200** of the wireless power receiver **1000** is formed by removing the mask **500**.

[0095] Thereafter, referring to FIG. **8**, the soldering work is performed to connect the coil unit **200** with the connecting unit **300**.

[0096] That is, the first connection terminal **210** of the coil unit **200** may be connected to the first connection terminal **310** of the connecting unit **300** through the first solder **10** and the second connection terminal **220** of the coil unit **200** may be connected to the second connection terminal **320** of the connecting unit **300** through the second solder **20**.

[0097] As described above, since the coil unit **200** is directly disposed on the top surface of the magnetic substrate **100**, the overall thickness of the wireless power receiver **1000** can be remarkably reduced. In addition, since the wireless power receiver **1000** can be manufactured only through the laminating and etching processes, the manufacturing process may be simplified. FIG. **9** is a sectional view taken along line A-A' of the connecting unit **300** of the wireless power receiver **1000** shown in FIG. **2** according to the second embodiment.

[0098] Referring to FIG. **9**, the wireless power receiver **1000** may include a magnetic substrate **100**, a coil unit **200**, a connecting unit **300** and an adhesive layer **700**.

[0099] The magnetic substrate **100**, the coil unit **200**, and the connecting unit **300** are identical to those described with reference to FIG. **1**.

[0100] The adhesive layer **700** is interposed between the magnetic substrate **100** and the coil unit **200** to bond the magnetic substrate **100** to the coil unit **200**.

[0101] FIG. **10** is a plan view illustrating a wireless power receiver **1000** according to the third embodiment.

[0102] Referring to FIG. **10**, the wireless power receiver **1000** may include a magnetic substrate **100**, a coil unit **200**, a connecting unit **300** and a short-range communication antenna **600**.

[0103] The magnetic substrate **100**, the coil unit **200** and the connecting unit **300** are identical to those described with reference to FIGS. **1** to **3**.

[0104] The short-range communication antenna **600** includes a first connection terminal **610**, a second connection terminal **620** and an outer peripheral coil **630**.

[0105] The first connection terminal **610** and the second connection terminal **620** of the short-range communication antenna **600** are connected to the connecting unit **300**.

[0106] The short-range communication antenna **600** can make near field communication with a reader. The short-range communication antenna **600** may serve as an antenna that transceives information in cooperation with the reader.

[0107] According to one embodiment, the short-range communication antenna **600** may be arranged at an outer peripheral portion of the coil unit **200**. According to one embodiment, when the coil unit **200** is disposed at the center of the magnetic substrate **100**, the short-range communication antenna **600** may be arranged along the outer peripheral portion of the magnetic substrate **100** to surround the coil unit **200**. The short-range communication antenna **600** may have a rectangular configuration by winding one conductive line several times, but the embodiment is not limited thereto.

[0108] Similar to the coil unit **200**, the short-range communication antenna **600** may be formed as a conductive pattern or a conductive layer.

[0109] Various short-range communication technologies can be applied to the short-range communication antenna **600**, and the NFC technology is preferable. The NFC technology has the band of 12.56 MHz and is used for wireless communication in a short distance.

[0110] The short-range communication antenna **600** can be directly disposed on the top surface of the magnetic substrate **100**.

[0111] The method of forming the short-range communication antenna **600** on the magnetic substrate **100** may be identical to the method described with reference to FIG. **4**.

[0112] Hereinafter, a wireless power receiver **1000** according to the fourth embodiment will be described with reference to FIGS. **11** to **13**.

[0113] FIG. **11** is a perspective view illustrating the wireless power receiver **1000** according to the fourth embodiment.

[0114] Referring to FIG. **11**, the wireless power receiver **1000** includes a magnetic substrate **100**, a coil unit **200** and a connecting unit **300**.

[0115] The magnetic substrate **100** and the coil unit **200** are identical to those described with reference to FIG. **1**. However, the magnetic substrate **100** is slightly different from the magnetic substrate **100** described with reference to FIG. **1**, so the following description will be made while focusing the difference of the magnetic substrate **100**.

[0116] Referring to FIG. **11**, the magnet substrate **100** is formed with a receiving space **130** having a structure the same as that of the connecting unit **300**. That is, referring to FIG. **1**, the coil unit **200** is disposed on the top surface of the magnetic substrate **100** and the connecting unit **300** is disposed on the coil unit **200**. However, referring to FIG. **11**, the receiving space **130** having the structure the same as that of the connecting unit **300** is formed in the magnetic substrate **100**, so that the connecting unit **300** may be disposed under the coil unit **200**.

[0117] FIG. **12** is a plan view illustrating a wireless power receiver **1000** according to the fourth embodiment.

[0118] FIG. **12** shows the state in which the coil unit **200** and the connecting unit **300** are interconnected with each other.

[0119] The connecting unit **300** has a thickness equal to or smaller than a thickness of the magnetic substrate **100**. The connecting unit **300** may be implemented as a flexible printed circuit board (FPCB).

[0120] The connecting unit **300** may be disposed in the receiving space **130** of the magnetic substrate **100**.

[0121] If the thickness of the connecting unit **300** is equal to or smaller than the thickness of the magnetic substrate **100**, different from the embodiment shown in FIG. **3**, the overall thickness of the wireless power receiver **1000** can be reduced as much as the thickness of the connecting unit **300**. In addition, since the usage of the magnet **110** and the support **120** can be reduced due to the receiving space **130**, it is advantageous in terms of cost effectiveness.

[0122] FIG. **13** is a sectional view taken along line B-B' of the connecting unit **300** of the wireless power receiver **1000** shown in FIG. **12** according to the fourth embodiment.

[0123] The following description will be made on the assumption that the connecting unit **300** has a thickness smaller than that of the magnetic substrate **100**.

[0124] Referring to FIG. **13**, the first connection terminal **210**, the second connection terminal **220** and the coil **230** constituting the coil unit **200** are disposed on the top surface of the connecting unit **300**.

[0125] The connecting unit **300** is disposed under the coil unit **200**.

[0126] The first connection terminal **210** of the coil unit **200** is connected to the first connection terminal **310** of the connecting unit **300** by the solder **10**.

[0127] The second connection terminal **220** of the coil unit **200** is connected to the second connection terminal **320** of the connecting unit **300** by the solder **20**.

[0128] The coil **230** may be designed to have a predetermined width W and a predetermined thickness T. In addition, the coil **230** can be designed to have a predetermined winding interval.

[0129] Referring to FIG. **12**, different from the embodiment shown in FIG. **3**, the thickness of the connecting unit **300** is smaller than the thickness of the magnetic substrate **100**, so the overall thickness of the wireless power receiver **1000** can be reduced as much as the thickness of the connecting unit **300**. In addition, since the usage of the magnet **110** and the support **120** can be reduced due to the receiving space **130**, it is advantageous in terms of cost effectiveness.

[0130] Hereinafter, a wireless power receiver **1000** according to the fifth embodiment will be described in detail with reference to FIGS. **14** to **20**.

[0131] FIG. **14** is a perspective view illustrating the wireless power receiver **1000** according to the fifth embodiment, FIG. **15** is a plan view illustrating the wireless power receiver **1000** according to the fourth embodiment, FIG. **16** is a sectional view taken along line C-C' of the wireless power receiver **1000** according to the fifth embodiment, and FIGS. **17** to **21** are views for explaining a method of manufacturing the wireless power receiver **1000** according to the fifth embodiment.

[0132] First, referring to FIG. **14**, the wireless power receiver **1000** according to the fifth embodiment may include a magnetic substrate **100**, a coil unit **200** and a connecting unit **300**.

[0133] According to one embodiment, the wireless power receiver **1000** can wirelessly receive power from the transmission side using electromagnetic induction. In this case, the coil **230** of the coil unit **200** can wirelessly receive power through the electromagnetic induction with a coil of the transmission side.

[0134] According to one embodiment, the wireless power receiver **1000** can wirelessly receive power from the transmission side using resonance.

[0135] The magnetic substrate **100** may change the direction of the magnetic field received from the transmission side.

[0136] The magnetic substrate **100** can reduce the amount of the magnetic field leaked to the outside by changing the direction of the magnetic field received from the transmission side.

[0137] The magnetic substrate **100** can change the direction of the magnetic field received from the transmission side in the lateral direction such that the magnetic field can be more concentrated onto the coil unit **200**.

[0138] The magnetic substrate **100** can absorb some of the magnetic field received from the transmission side and leaked to the outside to dissipate the magnetic field as heat. If the amount of the magnetic field leaked to the outside is reduced, the bad influence of the magnetic field exerted on the human body can be reduced.

[0139] Referring to FIG. **16**, the magnetic substrate **100** may include a magnet **110** and a support **120**.

[0140] The magnet **110** may include a particle or a ceramic. According to one embodiment, the magnet **110** may be one of a spinel type magnet, a hexa type magnet, a sendust type magnet and a permalloy type magnet.

[0141] The support **120** may include thermosetting resin or thermoplastic resin and support the magnetic substrate **100**.

[0142] The magnetic substrate **100** may be prepared in the form of a sheet and may have a flexible property.

[0143] Referring again to FIG. **14**, the coil unit **200** may include a first connection terminal **210**, a second connection terminal **220** and a coil **230**. The coil **230** may formed as a conductive layer or a conductive pattern.

[0144] The coil unit **200** may be disposed inside the magnetic substrate **100**. In detail, the coil unit **200** may be buried inside the magnetic substrate **100**. In more detail, the magnetic substrate **100** may include a pattern groove and the coil unit **200** may be disposed in the pattern groove. The pattern groove may be formed as a conductive pattern or a conductive layer similar to the coil unit **200**.

[0145] The coil unit **200** has a thickness smaller than that of the magnetic substrate **100** and an upper portion of the coil unit **200** may be exposed out of the magnetic substrate **100**.

[0146] A process for manufacturing the wireless power receiver **1000** by disposing the coil unit **200** and the connecting unit **300** in the magnetic substrate **100** will be described later with reference to FIGS. **17** to **21**.

[0147] The first connection terminal **210** of the coil unit **200** is located at one end of the coil **230** and the second connection terminal **220** of the coil unit **200** is located at the other end of the coil **230**.

[0148] The first and second connection terminals **210** and **220** of the coil unit **200** are necessary for connection with the connecting unit **300**.

[0149] The coil **230** may be formed as a coil pattern which is obtained by winding a conductive line several times. According to one embodiment, when viewed from the top, the coil pattern may have a spiral shape. However, the embodiment is not limited thereto, and various patterns may be formed.

[0150] The coil unit **200** may transfer the power wirelessly received from the transmission side to the connecting unit **300**. The coil unit **200** may transfer the power wirelessly

received from the transmission side using the electromagnetic induction or resonance to the connecting unit **300**.

[0151] The connecting unit **300** may include a first connection terminal **310**, a second connection terminal **320** and a printed circuit board **330**.

[0152] The first connection terminal **310** of the connecting unit **300** may be connected to the first connection terminal **210** of the coil unit **200** and the second connection terminal **320** of the connecting unit **300** may be connected to the second connection terminal **220** of the coil unit **200**.

[0153] The printed circuit board **330** may include a wiring layer and the wiring layer may include a wireless power receiving circuit, which will be described later.

[0154] The connecting unit **300** connects the wireless power receiving circuit (not shown) with the coil unit **200** to transfer the power received from the coil unit **200** to a load (not shown) through the wireless power receiver circuit. The wireless power receiver circuit may include a rectifier circuit (not shown) for converting AC power into DC power and a smoothing circuit for transferring the DC power to the load after removing ripple components from the DC power.

[0155] FIGS. **15** and **16** show the detailed structure of the wireless power receiver **1000** according to the fifth embodiment when the coil unit **200** is connected to the connecting unit **300**.

[0156] FIG. **15** shows the coil unit **200** and the connecting unit **300** interconnected with each other.

[0157] The coil unit **200** can be connected to the connecting unit **300** by a solder.

[0158] Referring to FIG. **16**, the first connection terminal **210** of the coil unit **200** may be connected to the first connection terminal **310** of the connecting unit **300** through a first solder **10** and the second connection terminal **220** of the coil unit **200** may be connected to the second connection terminal **320** of the connecting unit **300** through a second solder **20**. In detail, the first connection terminal **210** of the coil unit **200** may be connected to the first connection terminal **310** of the connecting unit **300** through a via hole of the first solder **10** and the second connection terminal **220** of the coil unit **200** may be connected to the second connection terminal **320** of the connecting unit **300** through a via hole of the second solder **20**.

[0159] According to one embodiment, the via hole can be formed by using a laser. The laser may include a UV laser or a CO2 laser.

[0160] FIG. **16** is a sectional view of the wireless power receiver **1000** in which the magnetic substrate **100** and the coil unit **200** are connected to the connecting unit **300**.

[0161] That is, the first connection terminal **210**, the second connection terminal **220** and the coil **230** constituting the coil unit **200** may be disposed in a pattern groove **140** of the magnetic substrate **100**.

[0162] In addition, the magnetic substrate **100** and the coil unit **200** are connected to the connecting unit **300**.

[0163] The coil **230** may be designed to have a predetermined width W and a predetermined thickness T and the magnetic substrate **100** may be designed to have a predetermined thickness T**1**. According to one embodiment, the coil **230** has a thickness of 0.1 mm and the magnetic substrate **100** has a thickness of 0.43 mm, but these numerical values are illustrative purposes only. According to one embodiment, the thickness T of the coil **230** may be smaller than the thickness T**1** of the magnetic substrate **100**.

[0164] In the wireless power receiver **1000** according to the fifth embodiment, the coil unit **200** is directly disposed in the pattern groove **140** of the magnetic substrate **100**, so the overall thickness of an electronic appliance equipped with the wireless power receiver **1000** can be reduced as much as the thickness of the coil unit **200**. Thus, if the wireless power receiver **1000** according to the fifth embodiment is applied to the electronic device, such as the portable terminal, the overall thickness of the portable terminal can be reduced suitably for the current trend of slimness

[0165] In addition, in the wireless power receiver **1000** according to the fifth embodiment, the coil unit **200** is disposed in the pattern groove **140** of the magnetic substrate **100**. Thus, different from the electronic appliance in which a coil pattern is formed on an FPCB, the overall size of the electronic device equipped with the wireless power receiver **1000** can be reduced.

[0166] FIGS. **17** to **21** are views for explaining a method of manufacturing the wireless power receiver **1000** according to the fifth embodiment.

[0167] Hereinafter, the method of manufacturing the wireless power receiver **1000** according to the fifth embodiment will be described with reference to FIGS. **17** to **21** as well as FIGS. **14** to **16**.

[0168] First, referring to FIG. **17**, the magnetic substrate **100** is prepared. According to one embodiment, the magnetic substrate **100** may be produced by coating metal powder of sendust alloys, such as Al, Fe and SiO2, on polyethylene rubber and then forming an oxide layer on a surface of the polyethylene rubber.

[0169] Then, referring to FIG. **18**, heat and pressure are applied using a mold **1** to form the pattern groove in the magnetic substrate **100** for receiving the coil unit **200**. The mold **1** may have the shape corresponding to the shape of the coil unit **200**. According to one embodiment, the mold **1** can be manufactured by using an aluminum alloy, a copper alloy or a cast iron.

[0170] The mold **1** may be provided with a protrusion at a region corresponding to the coil unit **200** for wirelessly receiving the power.

[0171] When the heat is applied by using the mold **1**, the heat having the specific temperature is applied by taking the property of the metal powder of the sendust alloy constituting the magnetic substrate **100** into consideration. According to one embodiment, if the magnetic substrate **100** is produced by coating the metal powder of sendust alloy on the polyethylene rubber, when the heat and pressure are applied by using the mold **1**, high-pressure is applied at the temperature in the range of 100° C. to 180° C., and then the mold **100** is cooled to the temperature of 100° C. or below. After that, the mold **1** is separated from the magnetic substrate **100**. If the mold **1** is separated just after the pressure has been applied to the magnetic substrate **100**, the desired pattern groove **140** may not be formed due to residual heat in the pattern groove **140**. For this reason, the mold **1** is separated from the magnetic substrate **100** after cooling the mold **100** to the temperature of 100° C. or below.

[0172] If the magnetic substrate **100** is prepared by using the metal powder of sendust alloy, the heat temperature and pressure may vary depending on the distribution and concentration of the metal powder. That is, if the distribution of the metal powder is not uniform, the higher temperature and pressure may be applied. In contrast, if the distribution of the metal powder is uniform, the lower temperature and pressure

may be applied. In addition, if the concentration of the metal powder is low, the lower temperature and pressure may be applied as compared with the case in which the concentration of the metal powder is high. Further, the heat temperature and pressure may vary depending on the composition of the metal powder, that is, depending on the alloy constituting the metal powder.

[0173] In this manner, the temperature applied to the mold **1** may vary depending on the distribution, concentration and composition of the powder.

[0174] According to one embodiment, laser may be irradiated, instead of applying heat and pressure using the mold **1**, to form the pattern groove in the magnetic substrate **100** to receive the coil unit **200**. In this case, the pattern groove can be formed by using an excimer laser that irradiates the laser beam having a wavelength band of ultraviolet ray. The excimer laser may include a KrF excimer laser (central wavelength 248 nm) or an ArF excimer laser (central wavelength 193 nm).

[0175] Next, referring to FIG. **19**, the mold **1** is separated from the magnetic substrate **100** so that the magnetic substrate **100** is formed with the pattern groove **140**.

[0176] Then, referring to FIG. **20**, the coil unit **200** is inserted into the pattern groove **140** formed in the magnetic substrate **100**. As the coil unit **200** is inserted into the pattern groove **140**, a predetermined conductive pattern is formed in the pattern groove **140** of the magnetic substrate **100**.

[0177] According to one embodiment, a process for forming the coil unit **200** in the pattern groove **140** of the magnetic substrate **100** may include a plating process or a process for inserting a metal which has been etched to have the conductive pattern formed by the coil unit **200**.

[0178] In detail, according to the plating process, the metallic material is filled in the pattern groove **140** to form the coil unit **200**. At this time, the metallic material may include one selected from Cu, Ag, Sn, Au, Ni and Pd and the filling of the metallic metal can be performed through one of electroless plating, screen printing, sputtering, evaporation, ink jetting and dispensing or a combination thereof.

[0179] Then, referring to FIG. **21**, the soldering process is performed to connect the coil unit **200** with the connecting unit **300**.

[0180] That is, the first connection terminal **210** of the coil unit **200** is connected to the first connection terminal **310** of the connecting unit **300** through the solder **10** and the second connection terminal **220** of the coil unit **200** is connected to the second connection terminal **320** of the connecting unit **300** through the solder **20**.

[0181] As described above, according to the method of manufacturing the wireless power receiver **1000** of the fifth embodiment, the pattern groove is formed in the magnetic substrate **100** and the coil unit **200** is disposed in the pattern groove, so that the overall thickness of the wireless power receiver **1000** can be reduced. In addition, the wireless power receiver **1000** can be manufactured by simply forming the pattern groove and then inserting the coil unit into the pattern groove, so that the manufacturing process can be simplified.

[0182] FIG. **22** is a view for explaining variation of inductance, resistance and Q values of the coil unit **200** as a function of a usable frequency when the coil unit **200** is disposed on a top surface of the magnetic substrate according to the first embodiment, and FIG. **23** is a view for explaining variation of inductance, resistance and Q values of the coil unit **200** as a function of a usable frequency when the coil unit **200** is disposed in the pattern groove formed in the magnetic substrate according to the fifth embodiment.

[0183] The inductance, resistance and Q values of the coil unit **200** can be expressed as following equation 1.

$$Q=W*L/R \qquad \text{[Equation 1]}$$

[0184] In equation 1, w is a frequency used when transmitting power, L is inductance of the coil unit **200** and R is resistance of the coil unit **200**.

[0185] As can be understood from equation 1, the Q value becomes high as the inductance of the coil unit **200** is increased. If the Q value is increased, the power transmission efficiency can be improved. The resistance of the coil unit **200** is a numerical value of power loss occurring in the coil unit **200** and the Q value becomes high as the resistance value is decreased.

[0186] Referring to FIGS. **22** and **23**, when comparing the fifth embodiment, in which the coil unit **200** is disposed in the pattern groove **140** of the magnetic substrate **100**, with the first embodiment, in which the coil unit **200** is disposed on the top surface of the magnetic substrate **100**, when the usable frequency is 150 kHz, the inductance of the coil unit **200** is increased by 352.42 um from about 9986.92 um to about 10339.34 um and the resistance of the coil unit **200** is reduced by 0.057Ω from 0.910Ω to 0.853Ω. That is, the Q value is increased corresponding to the increment of the inductance and the reduction of the resistance.

[0187] Therefore, the wireless power receiver **1000** according to the fifth embodiment can increase the Q value by disposing the coil unit **200** in the pattern groove of the magnetic substrate **100**.

[0188] FIG. **24** is an H-field for illustrating a radiation pattern of a magnetic field when the coil unit is disposed on a top surface of the magnetic substrate according to the first embodiment, and FIG. **25** is an H-field for illustrating a radiation pattern of a magnetic field when the coil unit is disposed in the pattern groove formed in the magnetic substrate according to the fifth embodiment.

[0189] Referring to FIGS. **24** and **25**, a greater amount of magnetic fields is radiated from the outer peripheral portion of the coil unit **200** when the coil unit **200** is disposed in the pattern groove formed in the magnetic substrate **100** as compared with the case in which the coil unit **200** is disposed on the top surface of the magnetic substrate **100**. This is because the magnetic field directed to the outside is changed in the lateral direction of the coil unit **200** due to the coil unit **200** buried in the magnetic substrate **100**.

[0190] In addition, a greater amount of magnetic fields is radiated at the inner portion of the coil unit **200** when the coil unit **200** is disposed in the pattern groove formed in the magnetic substrate **100** as compared with the case in which the coil unit **200** is disposed on the top surface of the magnetic substrate **100**. This is also because the magnetic field directed to the outside is changed in the lateral direction of the coil unit **200** due to the coil unit **200** buried in the magnetic substrate **100**.

[0191] Referring to FIGS. **24** and **25**, the wireless power receiver **1000** may further include a short-range communication antenna **600**.

[0192] The short-range communication antenna **600** can make near field communication with a reader. The short-range communication antenna **600** may serve as an antenna that transceives information in cooperation with the reader.

[0193] According to one embodiment, the short-range communication antenna **600** may be arranged at an outer peripheral portion of the coil unit **200**. According to one embodiment, when the coil unit **200** is disposed at the center of the magnetic substrate **100**, the short-range communication antenna **600** may be arranged along the outer peripheral portion of the magnetic substrate **100** to surround the coil unit **200**. The short-range communication antenna **600** may have a rectangular configuration by winding one conductive line several times, but the embodiment is not limited thereto.

[0194] Similar to the coil unit **200**, the short-range communication antenna **600** may be formed as a conductive pattern or a conductive layer.

[0195] Various short-range communication technologies can be applied to the short-range communication antenna **600** and the NFC technology is preferable.

[0196] Hereinafter, a wireless power receiver according to another embodiment will be described with reference to FIGS. **26** to **36**.

[0197] FIG. **26** is an exploded perspective view of the wireless power receiver **1000** according to still another embodiment, FIG. **27** is a perspective view of the wireless power receiver **1000** according to still another embodiment, and FIG. **28** is a sectional view of the wireless power receiver **1000** according to still another embodiment.

[0198] Meanwhile, FIG. **27** is a perspective view showing the assembled state of the elements of the wireless power receiver **1000** shown in FIG. **26**, in which some elements are omitted.

[0199] The wireless power receiver **1000** according to still another embodiment may be disposed in an electronic device, such as a portable terminal.

[0200] Referring to FIGS. **26** to **28**, the wireless power receiver **1000** may include a magnetic substrate **100**, a coil unit **200**, a connecting unit **300**, a short-range communication antenna **600**, an adhesive layer **700**, a first dual-side adhesive layer **710**, a second dual-side adhesive layer **720**, a protective film **800** and a release paper layer **730**.

[0201] Referring to FIG. **26**, the magnetic substrate **100** can change the direction of the magnetic field transferred from the transmission side.

[0202] The magnetic substrate **100** changes the direction of the magnetic field transferred to the coil unit **200** from the transmission side to reduce the amount of the magnetic field leaked to the outside. Thus, the magnetic substrate **100** may have the electromagnetic wave shielding effect.

[0203] In detail, the magnetic substrate **100** changes the direction of the magnetic field transferred from the transmission side in the lateral direction such that the magnetic field can be more concentrated onto the coil unit **200**.

[0204] The magnetic substrate **100** can absorb some of the magnetic field transferred to the coil unit **200** from the transmission side and leaked to the outside to dissipate the magnetic field as heat. If the amount of the magnetic field leaked to the outside is reduced, the bad influence of the magnetic field exerted on the human body can be reduced.

[0205] Referring to FIG. **28**, the magnetic substrate **100** may include a magnet **110** and a support **120**.

[0206] According to one embodiment, the magnet **110** may be one of a spinel type magnet, a hexa type magnet, a sendust type magnet and a permalloy type magnet.

[0207] The support **120** may include thermosetting resin or thermoplastic resin and support the magnetic substrate **100**.

[0208] Referring again to FIG. **26**, the magnetic substrate **100** may be prepared in the form of a sheet and may have a flexible property.

[0209] A receiving space **130** is formed at a predetermined area of the magnet substrate **100**. The receiving space **130** has a structure the same as that of the connecting unit **300**. The connecting unit **300** is disposed in the receiving space **130** and connected to the coil unit **200**.

[0210] The coil unit **200** can receive the power from the transmission side using the electromagnetic induction or resonance. Similar to the coil unit **200** illustrated in FIG. **1**, the coil unit **200** may include a first connection terminal **210**, a second connection terminal **220** and a coil **230**. The coil **230** may be formed as a conductive layer or a conductive pattern.

[0211] The connecting unit **300** connects a receiver circuit (not shown) with the coil unit **200** to transfer the power received from the coil unit **200** to a load (not shown) through the receiver circuit.

[0212] The connecting unit **300** may include a wiring layer and the wiring layer may include the wireless power receiving circuit. The wireless power receiving circuit may include a rectifier circuit for rectifying the power received from the coil unit **200**, a smoothing circuit for removing noise signals, and a main IC chip for performing the operation to wirelessly receive the power.

[0213] In addition, the receiver circuit can transfer the signal received from the short-range communication antenna **600** to a short-range communication signal processing unit (not shown).

[0214] The connecting unit **300** is disposed in the receiving space **130** of the magnetic substrate **100** and connected to the coil unit **200**. FIG. **27** shows the connecting unit **300** disposed in the receiving space **130** of the magnetic substrate **100**.

[0215] The connecting unit **300** may include a first connection terminal **310**, a second connection terminal **320**, a third connection terminal **340** and a fourth connection terminal **350**. The first connection terminal **310** of the connecting unit **300** is connected to the first connection terminal **210** of the coil unit **200**, the second connection terminal **320** of the connecting unit **300** is connected to the second connection terminal **220** of the coil unit **200**, the third connection terminal **340** of the connecting unit **300** is connected to a first connection terminal **610** of the short-range communication antenna **600** and the fourth connection terminal **350** of the connecting unit **300** is connected to a second connection terminal **620** of the short-range communication antenna **600**.

[0216] The connecting unit **300** may have the shape corresponding to the shape of the receiving space **130** and may be disposed in the receiving space **130**. Since the connecting unit **300** is disposed in the receiving space **130** of the magnetic substrate **100**, the thickness of the wireless power receiver **1000** can be remarkably reduced as much as the thickness of the connecting unit **300**. Thus, the thickness of the electronic device, such as a portable terminal, equipped with the wireless power receiver **1000** can be remarkably reduced.

[0217] According to one embodiment, the connecting unit **300** may include a flexible printed circuit board (FPCB), a tape substrate (TS) or a lead frame (LF). If the tape substrate is used as the connecting unit **300**, the thickness of the connecting unit **300** can be reduced, so that the overall size of the wireless power receiver **1000** can be reduced.

[0218] If the lead frame is used as the connecting unit **300**, the wiring layer included in the connecting unit **300** can be

protected from the heat, external moisture or impact and the mass production can be realized.

[0219] Referring again to FIG. **26**, the short-range communication antenna **600** can make near field communication with a reader. The short-range communication antenna **600** may serve as an antenna that transceives information in cooperation with the reader.

[0220] According to one embodiment, the NFC signal processing unit (not shown) can process the signal transferred to the short-range communication antenna **600** through the connecting unit **300**.

[0221] Various short-range communication technologies can be applied to the short-range communication antenna **600** and the NFC technology is preferable.

[0222] According to one embodiment, the short-range communication antenna **600** may be arranged at an outer peripheral portion of the coil unit **200**. Referring to FIG. **27**, when the coil unit **200** is disposed at the magnetic substrate **100**, the short-range communication antenna **600** may be arranged along the outer peripheral portion of the magnetic substrate **100** to surround the coil unit **200**. The short-range communication antenna **600** may have a rectangular configuration by winding one conductive line several times, but the embodiment is not limited thereto.

[0223] Referring again to FIG. **26**, the adhesive layer (not shown) may be disposed under the protective film **800** to form the protective film **800** on the coil unit **200** and the short-range communication antenna **600**, which will be described later in detail.

[0224] The first dual-side adhesive layer **710** is interposed between the magnetic substrate **100** and the coil unit **200**/short-range communication antenna **600** to adhere the coil unit **200** to the magnetic substrate **100**, which will be described later in detail. Similar to the magnetic substrate **100**, a receiving space having the shape identical to the shape of the connecting unit **300** may be formed in the first dual-side adhesive layer **710**.

[0225] Referring again to FIG. **28**, the second dual-side adhesive layer **720** adheres the protective film **800** to the release paper layer **730**, which will be described later in detail.

[0226] The coil unit **200** may be disposed on the magnetic substrate **100** and may have a spiral structure, but the embodiment is not limited thereto.

[0227] Hereinafter, the method of manufacturing the wireless power receiver **1000** according to still another embodiment will be described with reference to FIGS. **29** to **36**.

[0228] When the manufacturing process starts, as shown in FIG. **29**, the conductor **201**, the adhesive layer **700** and the protective film **800** are prepared.

[0229] According to one embodiment, the conductor **201** may be formed by using an alloy including copper. The copper is in the form of roll annealed copper or electrodeposited copper. The conductor **201** may have various thicknesses depending on the specification of a product. According to one embodiment, the conductor **201** may have the thickness of 100 μm, but the embodiment is not limited thereto.

[0230] The adhesive layer **700** is used to reinforce the adhesive strength between the conductor **201** and the protective film **800**. The adhesive layer **700** may include thermosetting resin, but the embodiment is not limited thereto. The adhesive layer may have the thickness of 17 μm, but the embodiment is not limited thereto.

[0231] The protective film **800** protects the conductor **201** when a predetermined conductive pattern is formed in the conductor **201**. In detail, the protective film **800** supports the conductor **201** in the etching process, which will be described later, to protect the conductor **201** such that the predetermined conductive pattern can be formed in the conductor **201**.

[0232] According to one embodiment, the protective film **800** may include polyimide film (PI film), but the embodiment is not limited thereto.

[0233] Then, as shown in FIG. **30**, the conductor **201** is formed on the protective film **800** by the adhesive layer **700**. The laminating process can be used to form the conductor **201** on the protective film **800**. The laminating process refers to the process to bond heterogeneous materials with each other by applying predetermined heat and pressure.

[0234] Then, as shown in FIG. **31**, a photoresist film **900** is attached onto the top surface of the conductor **201**. The photoresist film **900** is used for etching the conductor **201** to form a predetermined conductive pattern in the conductor **201**. A UV exposure type film or an LDI exposure type film may be used as the photoresist film **900**. According to another embodiment, a photoresist coating solution can be coated on the top surface of the conductor **201** without using the photoresist film **900**.

[0235] After that, as shown in FIG. **32**, the photoresist film **900** is subject to the exposure and development processes to form a mask pattern **910**.

[0236] The mask pattern **910** may be formed on the top surface of the conductor **201** corresponding to the position of the conductive pattern.

[0237] The exposure process refers to the process for selectively irradiating light onto the photoresist film **900** corresponding to the conductive pattern. In detail, in the exposure process, the light is irradiated onto regions of the conductor **201** where the conductive pattern is not formed. The development process refers to the process for removing the regions to which the light is irradiated through the exposure process.

[0238] Due to the exposure and development processes, the mask pattern **910** may be formed in the regions corresponding to the coil unit **200** and the short-range communication antenna **600**. The conductor **201** exposed through the mask pattern **910** may be etched.

[0239] Then, as shown in FIG. **33**, a predetermined portion of the conductor **201** where the mask pattern **910** is not formed may be removed through the etching process. The etching process refers to the process of removing the predetermined portion of the conductor **201** where the mask pattern **910** is not formed by using a chemical reacting with the predetermined portion of the conductor **201**. According to one embodiment, the conductor **201** may be patterned through the wet etching or dry etching.

[0240] After that, as shown in FIG. **34**, the mask pattern **910** is removed so that the first and second connection terminals **210** and **220** of the coil unit **200**, the first and second connection terminals **610** and **620** of the short-range communication antenna **600**, the coil **230** having a predetermined conductive pattern and the short-range communication antenna **600** having a predetermined conductive pattern may be formed.

[0241] Then, as shown in FIG. **35**, the soldering process is performed to connect the coil unit **200** and the short-range communication antenna **600** to the connecting unit **300**. According to one embodiment, the soldering process includes the reflow process, but the embodiment is not limited thereto. The reflow process refers to the process for bonding

the coil unit **230** and the short-range communication antenna **600** with the connecting unit **300** by melting solder cream using high-temperature heat to ensure the stable electrical connection between the connecting unit **300** and the coil unit **230**/NFC antenna **600**.

[0242] The first connection terminal **310** of the connecting unit **300** may be connected to the first connection terminal **210** of the coil unit **200** by a solder **30**, the second connection terminal **320** of the connecting unit **300** may be connected to the second connection terminal **220** of the coil unit **200** by the solder **30**, the third connection terminal **340** of the connecting unit **300** may be connected to the first connection terminal **610** of the short-range communication antenna **600** by the solder **30** and the fourth connection terminal **350** of the connecting unit **300** may be connected to the second connection terminal **620** of the short-range communication antenna **600**.

[0243] Then, as shown in FIG. **36**, the magnetic substrate **100** is laminated on a predetermined portion of the conductive pattern where the connecting unit **300** is not present. In detail, the magnetic substrate **100** may be laminated on the top surfaces of the coil **230** and the short-range communication antenna **600**.

[0244] Prior to the above, the receiving space corresponding to the connecting unit **300** can be formed at the magnetic substrate **100**. The receiving space of the magnetic substrate **100** may have the shape identical to the shape of the connecting unit **300**.

[0245] As described above with reference to FIG. **26**, since the connecting unit **300** is disposed in the receiving space **130** of the magnetic substrate **100**, the thickness of the wireless power receiver **1000** can be remarkably reduced as much as the thickness of the connecting unit **300**. Thus, the thickness of the electronic device, such as a portable terminal, equipped with the wireless power receiver **1000** can be remarkably reduced.

[0246] The coil **230**/short-range communication antenna **600** and the magnetic substrate **100** may be adhered with each other by the first dual-side adhesive layer **710**. According to one embodiment, the magnetic substrate **100** may have the thickness in the range of 100 μm to 800 μm, but the embodiment is not limited thereto. According to one embodiment, the first dual-side adhesive layer **710** may have the thickness in the range of 10 μm to 50 μm, but the embodiment is not limited thereto.

[0247] After that, the release paper layer **730** is attached to one side of the protective film **800** by interposing the second dual-size adhesive layer **720** therebetween. The release paper layer **730** is a paper layer for protecting the second dual-size adhesive layer **720** and may be removed when the wireless power receiver is disposed in a case of an electronic device, such as a portable terminal.

[0248] Although embodiments have been described with reference to a number of illustrative embodiments thereof, it should be understood that numerous other modifications and embodiments can be devised by those skilled in the art that will fall within the spirit and scope of the principles of this disclosure. More particularly, various variations and modifications are possible in the component parts and/or arrangements of the subject combination arrangement within the scope of the disclosure, the drawings and the appended claims. In addition to variations and modifications in the component parts and/or arrangements, alternative uses will also be apparent to those skilled in the art.

What is claimed is:

1. A wireless power receiver comprising:

a magnetic substrate; and

a coil configured to wirelessly receive power, wherein the coil is formed as a conductive layer on the magnetic substrate.

2. The wireless power receiver of claim **1**, wherein the coil is formed as a conductive pattern on the magnetic substrate.

3. The wireless power receiver of claim **1**, wherein the magnetic substrate has a receiving space of a predetermined shape formed therein corresponding to a shape of a connecting unit connected to a wireless power receiving circuit.

4. The wireless power receiver of claim **3**, further comprising the connecting unit disposed in the receiving space and connected to the coil.

5. The wireless power receiver of claim **4**, wherein the connecting unit comprises one of a flexible printed circuit board, a lead frame and a tape substrate.

6. The wireless power receiver of claim **1**, further comprising a short-range communication antenna formed on the magnetic substrate to surround the coil.

7. The wireless power receiver of claim **6**, wherein the short-range communication antenna comprises a near field communication (NFC) antenna.

8. The wireless power receiver of claim **6**, wherein the magnetic substrate has a receiving space of a predetermined shape formed therein corresponding to a shape of a connecting unit connected to a wireless power receiving circuit.

9. The wireless power receiver of claim **8**, further comprising the connecting unit disposed in the receiving space and connected to the coil and a near field communication signal process unit.

10. A wireless power receiver comprising:

a magnetic substrate; and

a coil configured to wirelessly receive power, wherein the coil is formed as a conductive layer at the magnetic substrate,

wherein a part of the coil is disposed inside the magnetic substrate.

11. The wireless power receiver of claim **10**, wherein the coil is formed as a conductive pattern at the magnetic substrate.

12. The wireless power receiver of claim **10**, wherein the magnetic substrate comprises a pattern groove for receiving a part of the coil and the part of the coil is disposed in the pattern groove.

13. The wireless power receiver of claim **10**, wherein the coil has a thickness smaller than a thickness of the magnetic substrate and an upper portion of the coil is exposed out of the magnetic substrate.

14. A method of manufacturing a wireless power receiver for wirelessly receiving power, the method comprising:

forming a conductor on a protective film;

forming a conductive pattern by etching the conductor;

connecting a connecting unit to be connected to an external circuit to a connection terminal of the conductive pattern;

obtaining a magnetic substrate having a receiving space of a predetermined shape corresponding to the connecting unit; and

disposing the magnetic substrate on the conductive pattern while positioning the connecting unit in the receiving space.

15. The method of claim **14**, wherein the forming of the conductive pattern comprises etching the conductor to form the conductive pattern corresponding to a coil for wirelessly receiving the power and a near field communication antenna for making communication with an outside.

16. The method of claim **15**, which comprises positioning connection terminals of the coil and the near field communication antenna in the receiving space.

17. The method of claim **14**, wherein the disposing of the magnetic substrate comprises forming the magnetic substrate on the conductive pattern using a dual-side adhesive layer.

18. The method of claim **14**, further comprising forming a release paper layer on the protective film using a dual-side adhesive layer.

19. A terminal equipped therein with a wireless power receiver of claim **1**.

20. A terminal equipped therein with a wireless power receiver of claim **10**.

* * * * *