UNITED STATES PATENT AND TRADEMARK OFFICE

BEFORE THE PATENT TRIAL AND APPEAL BOARD

TESLA, INC.,
Petitioner

v.

AUTONOMOUS DEVICES, LLC,
Patent Owner

Case: IPR2023-01054
U.S. Patent No. 10,452,974

PATENT OWNER'S RESPONSE

TABLE OF CONTENTS

I. INTRODUCTION 1

II. THE ’974 PATENT 2

1. Existing Technology 3

2. Advantages Provided by the ’974 Patent 3

III. PERSON OF ORDINARY SKILL IN THE ART 6

IV. ALLEGED PRIOR ART 6

A. GROTMOL (EX. 1004) 6

B. HICKMAN (EX. 1005) 8

V. CLAIM CONSTRUCTION 9

A. “connection” (Claim 7) 10

B. “means for generating or receiving”; “means for anticipating”; and “means for executing” (Claim 19) 15

VI. THE CITED REFERENCES DO NOT RENDER THE CHALLENGED CLAIMS UNPATENTABLE 15

A. Ground 1 Fails 15

1. Claim 4: Grotmol Does Not Disclose a Knowledgebase Including a Fourth Correlation Learned in Another Learning Process Involving a Second Device 15

2. Claim 5: Grotmol Does Not Disclose the Claimed Matching 20

3. Claim 7: Grotmol Does Not Disclose the Claimed Connections 22

B. Ground 2 Fails 25

1. Claim 11: Grotmol Does Not Disclose or Suggest a Knowledgebase Including a Fourth Correlation Learned

in Another Learning Process Involving a Second Device and Another User 26

C. Ground 3 Fails 35

1. Claims 4 and 11: It Would Not Have Been Obvious to Combine Grotmol and Hickman to Arrive At the Claimed Invention 38

2. Claim 4: Grotmol and Hickman Do Not Disclose or Suggest a Knowledgebase Including a Fourth Correlation Learned in Another Learning Process Involving a Second Device 41

3. Claim 11: Grotmol and Hickman Do Not Disclose or Suggest the Claimed Fourth Correlation, Second Device and Another User 50

VII. PETITIONER'S OBVIOUSNESS ANALYSIS IN GROUNDS 2 AND 3 IS FAULTY 56

A. Ground 2 57

B. Ground 3 60

VIII. CONCLUSION 61

TABLE OF AUTHORITIES

Page(s)

CASES

Amazon Web Services, Inc. v. Saint Regis Mohawk Tribe,
IPR2019-00103, Paper No. 22 (PTAB May 10, 2019) 38, 59

Arendi S.A.R.L. v. Apple Inc.,
832 F.3d 1355 (Fed. Cir. 2016) 32

DePuy Spine, Inc. v. Medtronic Sofamor Danek, Inc.,
469 F.3d 1005 (Fed. Cir. 2006) 10

Graham v. John Deere Co. of Kansas City,
383 U.S. 1 (1966).....33, 58, 61

In re Kahn,
441 F. 3d 977 (Fed. Cir. 2006) 57

Koninklijke Philips N.V. v. Google LLC,
948 F.3d 1330 (Fed. Cir. 2020) 59, 61

M&K Holdings, Inc. v. Samsung Elecs. Co.,
985 F.3d 1376 (Fed. Cir. 2021) 60

Phillips v. AWH Corp.,
415 F.3d 1303 (Fed. Cir. 2005) 9

Toyota Motor Corp. v. Cellport Systems, Inc.,
IPR2015-00633, Paper No. 11 (Aug. 14, 2015) 10

TQ Delta, LLC v. Cisco Sys., Inc.,
942 F.3d 1352 (Fed. Cir. 2019) 39

STATUTES

5 U.S.C. §§ 551-559.....58

35 U.S.C. § 103 57

35 U.S.C. § 312(a)(3).....41

35 U.S.C. § 316(e) 1

OTHER AUTHORITIES

37 C.F.R. § 42.22(a)(2) 41

37 C.F.R. § 42.104(b)(3)-(4) 41

37 C.F.R. § 100(b) (2019) 9

U.S. Patent No. 8,639,644 1

U.S. Patent No. 9,604,359 1

U.S. Patent No. 10,452,974 ..... passim

Exhibit List

Exhibit	Description
2001	Biography of Blair M. Jacobs (previously submitted)
2002	Declaration of Blair M. Jacobs (previously submitted)
2003	Supplemental Declaration of Blair M. Jacobs (previously submitted)
2004	Disclaimer of Claims 1-3, 6, 8-10, 12-13, 16-20 (previously submitted)
2005	District Court Docket (previously submitted)
2006	District Court Scheduling Order (previously submitted)
2007	Declaration of Dr. Eli Saber
2008	Deposition transcript of Dr. Jason Janet dated February 28, 2024 in IPR2023-01054
2009	RESERVED
2010	RESERVED
2011	RESERVED
2012	American Heritage Dictionary (1992) Excerpts
2013	Webster's Third New International Dictionary (2002) Excerpts
2014	RESERVED
2015	Dr. Eli Saber CV

I. INTRODUCTION

Autonomous Devices, LLC ("Patent Owner" or "Autonomous Devices") respectfully submits this Response to the Board's decision to institute *inter partes* review (Paper No. 20, the "Decision") and to the Petition for *inter partes* review (Paper No. 1, the "Petition" or "Pet.") filed by Tesla, Inc. ("Petitioner" or "Tesla"). This Response is timely filed in accordance with the Board's Scheduling Order (Paper No. 21). The Board instituted review of U.S. Patent No. 10,452,974 ("the '974 patent") on Petitioner's grounds that challenge Claims 4–5, 7, 11, and 14–15 (the "Challenged Claims")[1] of the '974 patent based on anticipation by U.S. Patent No. 9,604,359 ("Grotmol") (Exhibit 1004), obviousness over Grotmol in view of the knowledge of a person of ordinary skill in the art (POSA), and obviousness over Grotmol in view of U.S. Patent No. 8,639,644 ("Hickman") (Exhibit 1005). Decision, 61.

Petitioner has not carried its burden of proving unpatentability by a preponderance of the evidence (35 U.S.C. § 316(e)). As explained below and in the accompanying Declaration of Patent Owner's expert, Dr. Eli Saber, Petitioner has

[1] As explained in Patent Owner's Preliminary Response, certain claims have been disclaimed. Ex. 2004. The remaining claims after disclaimer are referred to herein as the "Challenged Claims."

not established that the above-cited prior art references disclose or suggest all of the limitations in any one of the Challenged Claims or that it would have been obvious to combine the above-cited references to arrive at the claimed inventions.[2] In addition, Petitioner's expert, Dr. Janet, is not credible in several respects. During cross examination, his testimony was inconsistent and confirmed that he and Petitioner failed to show with particularity and specificity how the claims are mapped to the prior art.

II. THE '974 PATENT

The '974 patent, titled "Artificially intelligent systems, devices, and methods for learning and/or using a device's circumstances for autonomous device operation," discloses systems and methods for learning and using a device's circumstances for autonomous device operation. Ex. 1001, Abstract, 1:39-41. The '974 patent discloses systems and methods for autonomous driving by learning and using a device's circumstances including detecting objects with various properties along with correlated instruction sets for operating the device in various circumstances. *Id.*, 57:49-55; *see also* Ex. 2007, ¶¶47-54. The circumstance and

[2] Patent Owner submits the Declaration of Dr. Eli Saber (Ex. 2007), an expert in the field of the '974 patent. Ex. 2007, ¶¶1-18; Ex. 2015.

instruction set information is stored in a knowledgebase and used to operate the device autonomously. *Id.*, 57:55-57.

1. Existing Technology

Prior to the innovations described in the ’974 patent, “[c]ommonly employed device or system operating techniques lack[ed] a way to learn [the] operation of a device or system and enable autonomous operation of a device or system.” *Id.*, 1:32-35. The ’974 patent solved this problem by utilizing a sophisticated system for learning the circumstances encountered by a device and distilling those circumstances into a set of circumstance representation data structures (which may include one or more object representation data structures) and corresponding instructions that can be efficiently performed autonomously. *Id.*, 57:49-57; *see also* Ex. 2007, ¶¶48-49.

2. Advantages Provided by the ’974 Patent

The ’974 patent is directed to systems, methods, and computer readable media that store a knowledgebase that correlates device operating instruction sets with representations of objects encountered by a device, obtain new object representations using device sensors, match the new objects with objects in the knowledgebase, and cause a device that detected the new objects to autonomously execute an instruction set correlated to the matched objects. Ex. 1001, 1:39-2:9. This autonomously performed operation is based on a correlation learned in a learning

process that includes operating a device at least partially by a user. *Id.*; *see also* Ex. 2007, ¶¶49-54.

Referring to Figure 38 (shown below) and the specification's description of Figure 38, for example, vehicle 98a includes sensors 92, such as a camera 92a, that capture the vehicle's 98a's surrounding. Ex. 1001, 162:39-163:63, Fig. 38, claim 1. The vehicle's computer(s) process the output from the sensors 92 to form a circumstance representation that includes object representations 625 representing objects 615aa-ad (people, boulders, materials, vehicles, etc.) in the vehicle's surrounding. *Id.*; *see also* Ex. 2007, ¶¶49-52. Each such object representation includes a data structure that includes object properties or other object information such as type of the object, location of the object, size or shape of the object, and/or others. Ex. 2007, ¶¶49-52. If a vehicle's computer(s) detect a match with a previously learned circumstance representation 525, the vehicle 98a performs autonomous operation using previously learned instructions 526 correlated with the previously learned circumstance representations 525. Ex. 1001, 162:39-163:63, Fig. 38, claim 1.

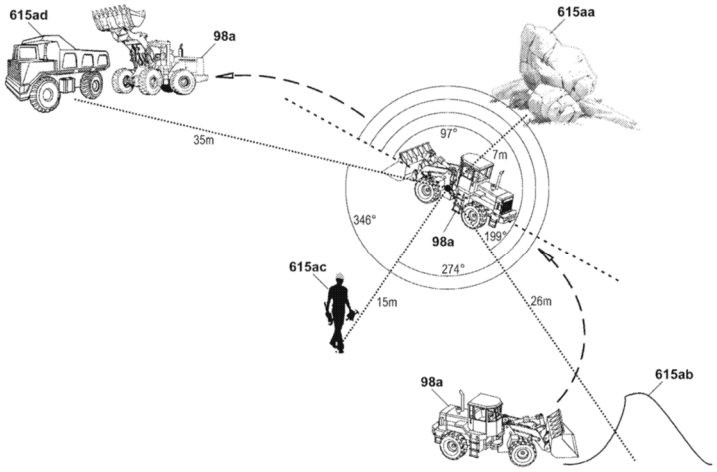

FIG. 38

Ex. 1001, Fig. 38.

The ’974 patent describes and claims methods and systems implementing its innovative techniques for autonomous operation. Ex. 2007, ¶¶49-54. For example, one such method is claimed in claim 1. Claim 1 is directed to a method implemented by a computing system that uses correlations including circumstance representations to implement autonomous operation. Several other dependent claims provide additional details regarding methods for autonomous operation that are not disclosed in the references cited in the Petition. For example, claim 4 provides multiple learning processes that enable autonomous operation for multiple devices. This claim and the other Challenged Claims contain numerous limitations that the Petition has not established are disclosed, suggested or rendered obvious by the cited references.

III. PERSON OF ORDINARY SKILL IN THE ART

Patent Owner adopts Petitioner's definition of a person of ordinary skill in the art (POSA). Petition, 4; *see also* Ex. 2007, ¶45. A POSA relevant to the '974 patent would have at least: (1) a bachelor's degree in electrical engineering, computer engineering, computer science, systems engineering, or equivalent course work with two to three years of work experience in computer vision, image/video processing, and/or machine learning; or (2) a master's degree in electrical engineering, computer engineering, computer science, systems engineering, or equivalent course work with a focus in computer vision, image/video processing, and/or machine learning. Petition, 4; *see also* Ex. 2007, ¶¶45-46.

IV. ALLEGED PRIOR ART

The Petition relies on two references for its unpatentability grounds, and those references are summarized below.

A. GROTMOL (EX. 1004)

Grotmol discloses a simplistic method for training and operating a robotic device to follow a simple trajectory based on a simple sequence (i.e., ordered buffer) of images. Ex. 1004, Abstract. If any circumstance occurs for which the simple trajectory is not trained (i.e., different objects, etc.) the robot in Grotmol would not know what to do or would collide with an obstacle. Ex. 2007, ¶¶65-68. The robotic device "may utilize a camera" to store a "sequence of images of a visual scene seen

when following a trajectory during training in an ordered buffer." Ex. 1004, Abstract. During training, "[m]otor commands issued by a trainer corresponding to time instances when the images are acquired may be stored." *Id.*, 39:17-19. During autonomous operation, the robotic device may be configured to compare an acquired image "with one or more images from the training buffer in order to determine the most likely match." *Id.*, Abstract. After an acquired image is matched to an image stored in the training buffer, the best match may be used "to predict motor command for controlling operation of a robot." *Id.*, 27:57-58.

Figure 1 from Grotmol, shown below, discloses that robot 160 includes sensor 166. *Id.*, 8:57-61. Sensor 166 provides "information associated with objects within the field-of-view 168." *Id.*, 8:64-68. Grotmol discloses that its device also includes a memory that stores "training sets," which may include "an instance of the video frame, an instance of the binary signal, and an instance of a motor control indication configured to cause the robot to execute an action." *Id.*, 3:35-39. Grotmol never discloses specific data structures or the manner in which information is processed in robot 160. Ex. 2007, ¶¶65-68.

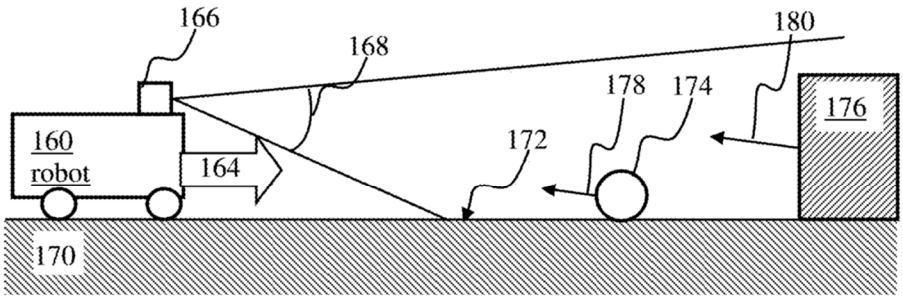

FIG. 1

Ex. 1004, Fig. 1.

B. HICKMAN (EX. 1005)

Hickman relates to "shared robot knowledge bases for use with cloud computing systems." Ex. 1005, Abstract. "[T]he cloud computing system" in Hickman "collects data from a robot about an object the robot has encountered in its environment, and stores the received data in the shared robot knowledge base." *Id.* Hickman teaches a method whereby "information in the shared robot knowledge base is updated based on robot experiences so that any particular robot may benefit from prior experiences of other robots." *Id.*; *see also* Ex. 2007, ¶¶69-71.

Hickman provides a basic method for storing and sharing single object information. As shown below in Figure 4 from Hickman, robot 404 may obtain single object information via one or more sensors. Ex. 1005, 25:14-19. That single object information is transmitted to cloud computing system 401, where it is stored and can be used by second robot 413. *Id.,* 25:24-27:26. Unlike the claims of the '974

patent that provide circumstance representations, Hickman only provides information about a single object and operates on a single object, and does not use any circumstance representations or correlations of circumstance representations and instruction sets. Ex. 2007, ¶¶69-71.

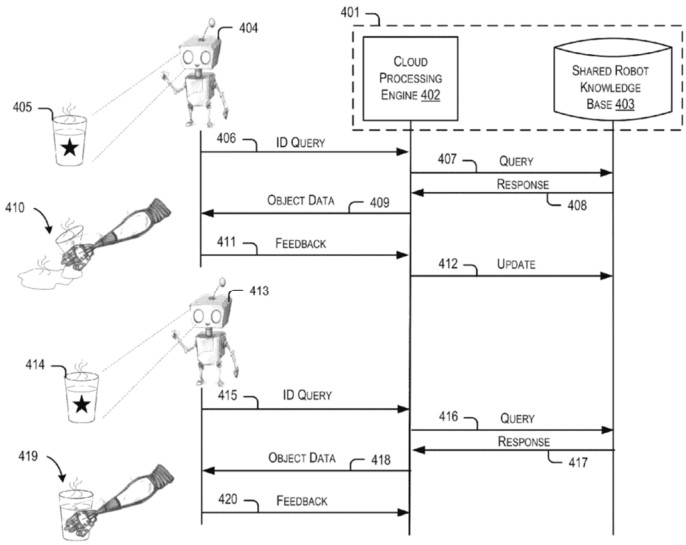

FIGURE 4

Ex. 1005, Fig. 4.

V. CLAIM CONSTRUCTION

The claims in an *inter partes* review are construed using the same standard that applies in district court proceedings, as set forth in *Phillips v. AWH Corp.*, 415 F.3d 1303 (Fed. Cir. 2005) (en banc). 37 C.F.R. § 100(b) (2019). Claim terms are afforded "their ordinary and customary meaning," which is "the meaning that the term would have to a person of ordinary skill in the art in question at the time of the invention." *Phillips*, 415 F.3d at 1312–13. "In determining the meaning of the

disputed claim limitation, we look principally to the intrinsic evidence of record, examining the claim language itself, the written description, and the prosecution history, if in evidence." *DePuy Spine, Inc. v. Medtronic Sofamor Danek, Inc.*, 469 F.3d 1005, 1014 (Fed. Cir. 2006) (citing *Phillips*, 415 F.3d at 1312-17). The Board, however, only construes the claims when necessary to resolve the underlying controversy. *Toyota Motor Corp. v. Cellport Systems, Inc.*, IPR2015-00633, Paper No. 11 at 16 (Aug. 14, 2015) (citing *Vivid Techs., Inc. v. Am. Sci. & Eng'g, Inc.*, 200 F.3d 795, 803 (Fed. Cir. 1999)).

Patent Owner proposes a construction for the term "connection." Additionally, claim terms for which Petitioner proposed a construction (Petition, 4-5) do not need construction because the claims reciting those terms have been disclaimed, as discussed below in Section V.B.

A. "connection" (Claim 7)

Claim 7 recites a "first connection" and a "second connection" in describing relationships that include links. Claim 7 recites in part:

> wherein a first connection is generated to connect the first correlation with the second correlation, and wherein a second connection is generated to connect the second correlation with the fourth correlation.

Ex. 1001, Claim 7.

In the context of claim 7 of the ’974 patent, including in light of the claims, specification, and drawings, a “connection” should be construed as a “relationship that includes a link.” Ex. 2007, ¶¶55-62. This construction is supported by the claims, specification, drawings, and intrinsic record as a whole. *Id.* Figure 17 of the ’974 patent makes clear that a connection is a relationship that includes a link:

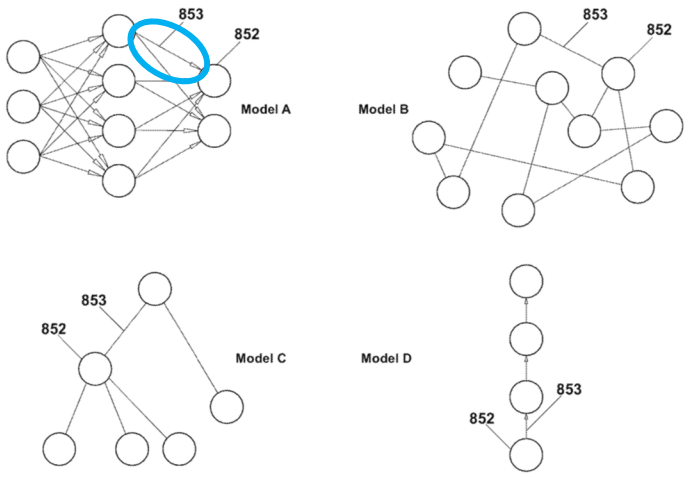

FIG. 17

Ex. 1001, Figure 17 (annotated to show Connection 853 in blue); Ex. 2007, ¶¶56-62.

In describing Figure 17, in this particular use of connections, the ’974 patent states that “machine learning, knowledge structuring or representation, decision making, pattern recognition, and/or other artificial intelligence functionalities may include a network of Nodes 852 (also referred to as neurons, etc.) and Connections

853 similar to that of a brain. Node 852 can store any data, object, data structure, and/or other item, or reference thereto." Ex. 1001, 103:46-52. For example, a node may include at least a portion of a circumstance representation or at least a portion of an object representation while another node may include at least a portion of an instruction set, and the two nodes may be in a relationship that includes a connection or link. As shown for example in Model A in Figure 17, in this particular use, Connections 853 are included in connecting or linking Nodes 852. *Id.*, 103:42-66. Connections are included as some of the elements connecting those nodes and showing relationships between those nodes. Ex. 2007, ¶¶56-62. Further, "Connection 853 may include or be associated with a value such as a symbolic label or numeric attribute (i.e. weight, cost, capacity, length, etc.)." Ex. 1001, 103:63-66.

In this particular use of connections, Figure 18A of the '974 patent also makes clear that a connection is a relationship that includes a link:

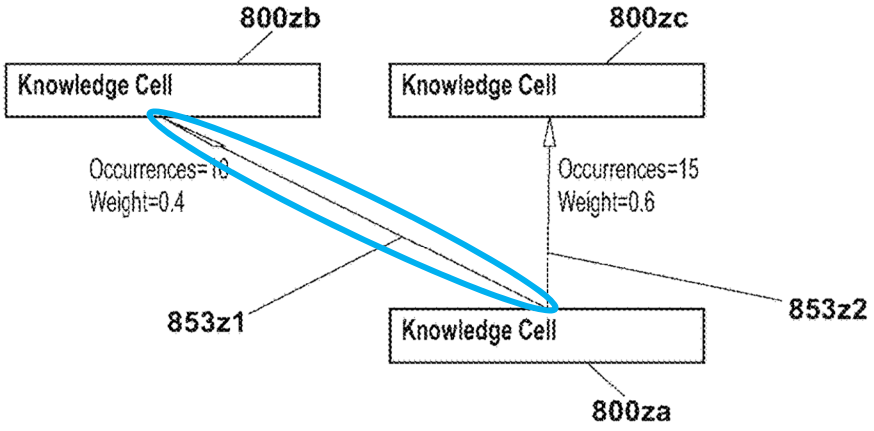

FIG. 18A

Ex. 1001, Figure 18A (annotated to show Connection 853 in blue); Ex. 2007, ¶59.

The specification further explains that, in this particular use, connections between correlations (each knowledge cell depicted in Fig. 18A includes a correlation, *see* Figs. 13-16) "may include or be associated with at least one of: an occurrence count, a weight, a parameter, or a data." Ex. 1001, 15:59-60. In addition, Figure 18A discloses "that Knowledge Cell 800za is connected to Knowledge Cell 800zb and Knowledge Cell 800zc by Connection 853zl and Connection 853z2, respectively. Each of Connection 853zl and Connection 853z2 may include or be associated with occurrence count, weight, and/or other parameter or data." *Id.*, 106:9-14. This also supports Patent Owner's construction, as the connections are relationships that include links. Ex. 2007, ¶¶58-62.

The ’974 patent further provides that “[k]nowledge cells [including correlations] may be connected, interrelated, or interlinked into knowledge structures using statistical, artificial intelligence, machine learning, and/or other models or techniques.” Ex. 1001, 153:66-154:2. In this particular use, Connections are used to indicate and track relationships including links to enable more efficient autonomous device operation. *Id.*, 106:6-57; 108:31-35. Further, connections are used to create paths through the knowledgebase for efficient storage and autonomous operation (*see* ‘974 patent Fig. 22 for example). Ex. 2007, ¶¶59-62. This disclosure confirms that, with respect to claim 7, connections are relationships that include links. Ex. 2007, ¶¶56-62.

Patent Owner’s expert also confirms that connection should be construed as a “relationship that includes a link.” Ex. 2007, ¶¶56-62. In addition, several dictionaries confirm that “connection” can be defined as a “relationship that includes a link.” *See* Ex. 2012; Ex. 2013; Ex. 2007, ¶62.

Patent Owner’s construction is confirmed by and consistent with the language of the claims and the various disclosures regarding connections including between correlations throughout the specification and should be adopted. Construction of this term is appropriate because there is a dispute regarding this term, in particular with respect to Petitioner’s mapping of prior art, as explained below in Section VI.

B. "means for generating or receiving"; "means for anticipating"; and "means for executing" (Claim 19)

Patent Owner has disclaimed claim 19, so construction of these terms is unnecessary. Ex. 2004.

VI. THE CITED REFERENCES DO NOT RENDER THE CHALLENGED CLAIMS UNPATENTABLE

The Board instituted review of the '974 patent based on Grounds 1-3. Decision, 61. In instituting review, the Board relied on the Petition and the testimony of Petitioner's declarant, Dr. Janet (Ex. 1002). For the reasons discussed below, the cited references do not render any of the Challenged Claims unpatentable. Ex. 2007, ¶¶72-129.

A. Ground 1 Fails

Regarding Ground 1, Petitioner fails to show that Grotmol anticipates claims 4-5 and 7 of the '974 patent. Petitioner fails to show that Grotmol discloses multiple limitations in these claims. As explained in the following sections, these limitations include the "second device" recited in claim 4, the specific "matching . . ." disclosed in claim 5, and the "connection" recited in claim 7. Ex. 2007, ¶¶73-90.

1. Claim 4: Grotmol Does Not Disclose a Knowledgebase Including a Fourth Correlation Learned in Another Learning Process Involving a Second Device

Petitioner has failed to show that Grotmol anticipates claim 4 of the '974 patent because Grotmol fails to disclose that the knowledgebase includes the claimed

fourth correlation learned in another learning process involving the second device. Ex. 2007, ¶¶74-78. Claim 4 depends from claim 1 and requires, among other things:

> wherein the knowledgebase further includes a fourth correlation including a fourth circumstance representation correlated with a fourth one or more ***instruction sets for operating the second device***, and wherein the fourth circumstance representation represents a fourth circumstance ***detected at least in part by the one or more sensors of the second device***, and wherein at least a portion of the fourth correlation is learned in ***another learning process*** that includes: generating or receiving the fourth circumstance representation; and obtaining or receiving the fourth one or more ***instruction sets for operating the second device***.

Ex. 1001, Claim 4 (emphasis added).

Grotmol only discloses ***one*** user operating ***one*** device in ***one*** learning process. Ex. 2007, ¶¶74-78. The knowledge gained from this process in Grotmol, when loaded into a second device, ***is still knowledge of one user operating one device in one learning process***. *Id.* Grotmol fails to disclose learning at least portions of multiple correlations in ***different (i.e., one and another) learning processes***, the first and second of such multiple correlations including circumstance representations detected by one (i.e., first) device and instruction sets for operating the one (i.e., first) device, and the fourth of such multiple correlations including a ***circumstance***

representation detected by another (i.e., second) device and instruction set for operating the another device. *Id.*

In its institution decision, the Board noted problems with Petitioner's argument regarding the claimed fourth correlation and "question[ed] whether Petitioner has sufficiently shown that Grotmol discloses more than loading a trained configuration from a first robot to a second robot." Decision, 35. The Board also questioned whether Petitioner had sufficiently shown that "Grotmol discloses a fourth correlation learned in another learning process by a second robot that is included as part of the knowledgebase along with the first and second correlations learned by the first robot." Decision, 35-36.

Petitioner points to Grotmol's disclosure that a "trained configuration may be loaded to one or more other robots in order to provide learned behaviors," Petition, 28 (quoting Ex. 1004, 33:30-32), as disclosing the elements of claim 4, but as the Board noted in its institution decision, that portion of Grotmol only discloses that a trained configuration may be loaded from a first robot to a second robot. Decision, 35; *see also* Ex. 2007, ¶¶74-78. Grotmol never discloses, either at the foregoing passage or elsewhere, ***that the second robot detects a fourth circumstance*** that is included in a fourth correlation of the fourth circumstance representation and a fourth one or more instruction sets ***for operating the second device*** in the

knowledgebase, as required by claim 4. Ex. 2007, ¶¶74-78. Petitioner's challenge to claim 4 should be rejected for this reason alone.

In addition, Grotmol does not disclose that "at least a portion of the fourth correlation is learned in another learning process," as required by claim 4. Ex. 2007, ¶¶77-78. Petitioner argued that "Grotmol discloses that the memory component of a first robot can store the claimed first and second correlations as well as a fourth correlation learned in another learning process involving the operation of a second robot—i.e., a circumstance detected by the sensor of a second robot correlated with instructions for operating that second robot." Petition, 28. However, the inquiry here is not what a robot in Grotmol can or cannot store, but what Grotmol actually discloses the robot storing. Petitioner's argument is Petitioner's own words not supported in Grotmol and is conclusory. Grotmol also never actually discloses that the second robot provides a fourth correlation ***including a circumstance detected by the second robot and an instruction set for operating the second robot*** to be included in the knowledgebase. Ex. 2007, ¶78. Grotmol merely discloses that a "trained configuration may be loaded to one or more other robots in order to provide learned behaviors." Ex. 1004, 33:30-32. Grotmol fails to disclose learning at least portions of multiple correlations in ***different (i.e., one and another) learning processes***, the first and second of such multiple correlations including circumstance representations detected by one (i.e., first) device and instruction sets for operating

the one (i.e., first) device, and the fourth of such multiple correlations including a circumstance representation ***detected by another device*** and instruction sets of operating the ***another device***. *Id.* In fact, Grotmol does not mention at all any second learning process involving a second device, any detecting of a circumstance by a second device, and any instruction sets for operating a second device.

Petitioner's expert, Dr. Janet, failed to point to specific disclosures in Grotmol for the claimed fourth correlation beyond the minimal disclosures discussed above. With respect to the only paragraph (Paragraph 94) of his declaration that actually includes citations to Grotmol for the claimed "fourth correlation" of claim 4 in Ground 1, he responded at his deposition that "[p]aragraph 94 is the ***door***, if you will, to Grotmol" and said his declaration provided a "***high-level*** mapping." Ex. 2008, 58:15-18 (emphasis added); *see also id.*, 59:15-19 (his testimony that Paragraph 94 "gives a ***high-level*** description" including "***catalysts***" or "***gateways***"; emphasis added). But he and Petitioner were required to provide a clear mapping—which his declaration has not done—to carry Petitioner's burden. Dr. Janet attempted to supplement his opinions at his deposition by pointing to additional portions of Grotmol not addressed in his declaration, but that is inappropriate because he did not include such opinions in his declaration and—significantly—the Petition does not rely on such additional portions. *See* Ex. 2008, 49:2-50:15, 51:7-25, 54:16-55:20.

2. Claim 5: Grotmol Does Not Disclose the Claimed Matching

Grotmol does not anticipate claim 5. Ex. 2007, ¶¶79-83. Claim 5 depends from claim 1 and requires:

> determining that a ***number*** of at least ***partially matching portions*** of the third circumstance representation and portions of the first circumstance representation ***exceeds a threshold number***, or determining that a ***percentage*** of at least ***partially matching portions*** of the third circumstance representation and portions of the first circumstance representation ***exceeds a*** threshold ***percentage***.

Ex. 1001, Claim 5.

As the Board noted in its institution decision, Petitioner points to Grotmol's disclosure regarding computing a similarity measure (how similar images are to one another) and comparing that similarity measure against a threshold, "but Petitioner does not specifically explain how Grotmol discloses determining a ***number*** (or ***percentage***) of at least partially matching portions of two training sets." Decision, 38. Grotmol's disclosure is patentably distinct from the foregoing language of claim 5, which requires determining that a ***number*** of at least partially ***matching portions*** exceeds a threshold ***number*** or ***percentage*** (***of portions***). Ex. 2007, ¶¶79-83.

Grotmol's comparison based on a similarity measure, which Petitioner relies on, does not disclose the elements of claim 5. Petition, 29. Using the number of at

least partially matching portions in the matching process ***involves counting the portions and determining whether this counted number of portions exceeds a numerical threshold***, and Grotmol does not disclose any such counting of portions and numerical threshold. Ex. 2007, ¶¶79-83. Further, using the percentage of at least partially matching portions in the matching process ***involves counting the portions to compute the percentage and determining whether this computed percentage of portions exceeds a percentage threshold***, and Grotmol does not disclose any such counting of portions, computation, and percentage threshold, either. *Id.*

Petitioner contends that Grotmol discloses "that determining a control signal for operation of the robot may involve computing a similarity measure for a given training set and another training set, and determining ***whether that similarity measure exceeds a threshold***." Petition, 29 (emphasis added). Grotmol discloses comparing a subset of features within a training set, with "the similarity measure characterizing similarity between features of the subset, and features of the given training set," ***not the number or percentage of the similar features***. Ex. 1004, 3:50-52; *see also* Ex. 2007, ¶¶81-83. A similarity measure is for measuring similarity of elements, not for counting their number or computing their percentage. Ex. 2007, ¶¶82-83. Hence, a similarity measure is clearly different than the number or percentage of the similar elements after the similarity measure of those elements is determined. *Id.*

Grotmol's disclosure regarding using the similarity measure does not meet either disjunctive prong of the foregoing claim language of claim 5. Grotmol does not disclose ***a count of at least partially matching portions that would enable a determination of whether the count exceeds a number threshold or a percentage of at least partially matching portions that would enable a determination of whether the percentage exceeds a percentage threshold*** in its matching process at all. Ex. 2007, ¶¶79-83. And Petitioner has not pointed to any disclosure in Grotmol disclosing these elements. Petition, 29.

3. Claim 7: Grotmol Does Not Disclose the Claimed Connections

Grotmol fails to disclose the claimed "first connection" and "second connection" of claim 7 under Patent Owner's proposed construction of "connection," which is discussed above in Section V.A. Ex. 2007, ¶¶84-90. Claim 7 depends from claim 1 and requires:

> wherein the knowledgebase further includes a fourth correlation including a fourth circumstance representation correlated with a fourth one or more instruction sets for operating: the first device, the second device, or a third device, and wherein ***a first connection is generated to connect the first correlation with the second correlation***, and wherein ***a second connection is generated to connect the second correlation with the fourth correlation***.

Ex. 1001, Claim 7 (emphasis added).

When properly construed, each claimed connection is a relationship that includes a link. *Supra* Section V.A. Grotmol does not disclose correlations connected via such connections. Ex. 2007, ¶¶84-90. Grotmol's disclosure of simply storing training data in sequence fails to disclose the claimed connections under Patent Owner's construction of that claim term. *Id.*

In its institution decision, the Board indicated that "it appears that the parties may have a dispute concerning the proper construction of the term 'connection' and what is required to generate 'a first connection' and 'a second connection,'" and suggested that "this issue would benefit from additional development." Decision, 41. The Board further indicated that "[n]either party proposes a claim construction for this term, or explains how Grotmol would satisfy the claims under such a construction." *Id.* Patent Owner now proposes a well-supported construction for the term "connection," and Grotmol fails to disclose the claimed connections under that construction. Ex. 2007, ¶¶84-90.

As discussed above, in the context of the '974 patent, including in light of the claims, specification, and drawings, a "connection" should be construed as a "relationship that includes a link." *Id.* Petitioner's argument that "[t]he training data stored in memory in an order or sequence" disclosed in Grotmol "corresponds to the claimed first and second 'connections' between the first and second correlations, and

the second and fourth correlations," Petition, 32, is wrong. Ex. 2007, ¶¶85-90. The connections disclosed in the '974 patent are relationships that include links. Ex. 2007, ¶¶85-86. In contrast, Grotmol merely ***discloses storing information in a sequence*** and fails to disclose any links among training sets. Ex. 2007, ¶86.

The '974 patent explains that the knowledgebase uses connections as links to enhance autonomous operation. Ex. 2007, ¶87. Unlike the simple storage in a sequence disclosed by Grotmol, knowledge cells are created and structured in a specific way to store object representations correlated with instruction sets (i.e., correlations), *id.*, 98:54-99:10, and are connected in the knowledgebase using connections. *Id.*, 131:64-132:26; Fig. 22. ***These connections create paths through the knowledgebase that enhance autonomous operation***. *Id.*; *see also* Ex. 2007, ¶¶84-90. A simple sequence in Grotmol does not enable anything like this and Petitioner fails to show any support for such connections among knowledge cells (that include correlations) in Grotmol.

Petitioner incorrectly argues that simply "storing sequences of images with their corresponding instruction sets," as in Grotmol, discloses the claimed connections. Petition, 32. A sequence of elements inherently does not need any connections since the sequence is an ordered group of elements of a single path (i.e., sequence), hence, ***Grotmol never discloses connections because Grotmol does not need them***. Ex. 2007, ¶¶87-90. On the other hand, the '974 patent makes clear that

connections link specific correlations ***to create multiple paths (unlike a single path in Grotmol's sequence)*** through the knowledgebase to enable multiple options in the decision making for autonomous operation. Ex. 2007, ¶¶88-90. Grotmol's disclosure of "an ordered buffer in a non-volatile memory," Ex. 1004, 38:39-42, does not constitute disclosure of the claimed connections or relationships including links. Ex. 2007, ¶¶89-90; *supra* Section V.A (explaining that in the context of correlations, a connection is a relationship that includes a link).

Petitioner also cites Grotmol's disclosure that the images may be ordered in the training buffer either temporally or in some other fashion, Petition, 32-33, but regardless of the order of the training buffer, ***the order is different from the claimed connections or relationships that include links***. Ex. 2007, ¶¶87-90. As a result, Grotmol's disclosure of basic memory storing ordered images and instruction sets does not disclose the claimed connections of claim 7. Ex. 2007, ¶¶84-90.

Moreover, claim 7 additionally requires generating the first and second connections. Ex. 1001, Claim 7. Grotmol does not disclose ***generation of connections*** as properly construed. Ex. 2007, ¶88. Petitioner has failed to point to any portions of Grotmol that disclose this generation. *Id.*

B. Ground 2 Fails

Regarding Ground 2, Petitioner fails to show that Grotmol in view of the knowledge of a POSA renders claim 11 of the '974 patent obvious. Ex. 2007, ¶¶91-

103. Petitioner fails to show that Grotmol discloses or suggests multiple limitations in this claim, and Petitioner's attempt to rely on the knowledge of a POSA to fill in the gaps in Grotmol's disclosure is ineffective. *Id.*

1. Claim 11: Grotmol Does Not Disclose or Suggest a Knowledgebase Including a Fourth Correlation Learned in Another Learning Process Involving a Second Device and Another User

Claim 11, which depends from claim 1, provides for multiple users and a second device and recites:

> wherein the knowledgebase further includes a fourth correlation including a fourth circumstance representation correlated with a fourth one or more ***instruction sets for operating the second device***, and wherein the fourth circumstance representation represents a fourth circumstance ***detected at least in part by the one or more sensors of the second device***, and wherein at least a portion of the fourth correlation ***is learned in another learning process that includes operating the second device at least partially by another user***.

Ex. 1001, Claim 11 (emphasis added).

The recited limitations of claim 11 include the above-quoted limitations of claim 4 and add the further limitation of "another user," and Grotmol does not disclose these same elements in claim 11 for at least the same reasons as discussed with respect to claim 4. Grotmol fails to disclose "another user" as required by claim

11, and Grotmol fails to disclose that the knowledgebase includes the claimed ***fourth correlation learned in another learning process involving the second device and another user***. Exhibit 2007, ¶¶91-103. As discussed above regarding claim 4 in Section VI.A.1, Grotmol discloses only ***one*** user operating ***one*** device in only ***one*** learning process. *Id.* The knowledge gained from this process in Grotmol, when loaded into a second device, ***is still knowledge of one user operating one device in one learning process***. *Id.* Grotmol discloses nothing like the learning at least portions of multiple correlations in ***different (i.e., one and another) learning processes involving different (i.e. one and another) users***, the first and second of such multiple correlations including circumstance representations detected by one (i.e., first) device and instruction sets for operating the one (i.e., first) device, and the fourth of such multiple correlations including a ***circumstance representation detected by another (i.e., second) device*** and ***instruction set for operating the another device***. *Id.*

In its institution decision, the Board noted problems with Petitioner's argument regarding the claimed fourth correlation and "question[ed] whether Petitioner has sufficiently shown that Grotmol discloses a fourth correlation learned in another learning process by a second robot that is included as part of the knowledgebase along with the first and second correlations learned by the first robot." Decision, 48. The Board also referenced its prior discussion of claim 4, where

the Board "question[ed] whether Petitioner has sufficiently shown that Grotmol discloses more than loading a trained configuration from a first robot to a second robot." Decision, 35. Petitioner has failed to show that Grotmol discloses all the elements of claim 11.

Petitioner invokes obviousness in contending (with little or no support) that "it would be obvious to a POSITA that the training process involving operation of the first robot (resulting in the first trained configuration), and the training process involving operation of the second robot (resulting in another trained configuration) could be done by different users." Petition, 57-58. Petitioner is wrong since this argument describes a situation involving ***two*** trained configurations each stored and learned on a different robot, whereas claim 11 recites a ***single knowledgebase*** that includes ***mixed knowledge*** of correlations (i.e., first and second) learned in one learning process involving one device and one user and an ***additional correlation (i.e., fourth) learned in another learning process involving a second device and another user***. Ex. 2007, ¶¶93-103. Grotmol also never discloses that the second robot provides a fourth correlation including a ***circumstance detected by the second robot and an instruction set for operating the second robot*** to be included in the single knowledgebase. Ex. 2007, ¶¶93-103. In fact, Grotmol fails to mention at all any second learning process involving a second device and second user, any

detecting of a circumstance by a second device, and any instruction sets for operating a second device.

The '974 patent discloses multiple users operating multiple devices:

> [M]ultiple operators (i.e. Users 50, etc.) may operate their Devices 98 where the Devices 98 may be configured to transmit their operations in circumstances including objects with various properties to a remote DCADO Unit 100. Such remote DCADO Unit 100 enables learning of the operators' 35 collective knowledge of operating Device 98 in circumstances including objects with various properties.

Ex. 1001, 95:31-36. Claim 11 recites that "at least a portion of the fourth correlation is learned in another learning process that includes operating the second device at least partially by another user." Claim 11's recitation of a second device and another user is not taught by Grotmol. Ex. 2007, ¶¶92-103.

Petitioner points to Grotmol's disclosure that "trained configuration may be loaded to one or more other robots in order to provide learned behaviors," Petition, 58, as disclosing the claimed "another user" of claim 11, but that portion of Grotmol only discloses that a trained configuration may be loaded from a first robot to a second robot. Ex. 1004, 33:30-32. Grotmol never discloses that ***the second robot detects a fourth circumstance*** that is included in a fourth correlation of the fourth circumstance representation and a fourth one or more ***instruction sets for operating***

the second device in the knowledgebase ***where this process involves another user***, as required by claim 11. Therefore, Petitioner's challenge to claim 11 should be rejected for this reason alone.

Further, Grotmol fails to disclose that "at least a portion of the fourth correlation is learned in another learning process" involving another user, as required by claim 11. Ex. 2007, ¶¶98-103. Petitioner argues:

> Grotmol discloses that the memory component of a first robot can store the claimed first and second correlations as well as a fourth correlation learned in another learning process involving the operation of a second robot—i.e., a circumstance detected by the sensor of a second robot correlated with instructions for operating that second robot.

Petition, 62. However, the inquiry here is not what a robot in Grotmol can or cannot store, but what Grotmol actually discloses the robot storing. This argument is Petitioner's own words not supported in Grotmol and is conclusory. Grotmol never discloses that the second robot provides a ***fourth correlation*** including ***a circumstance detected by the second robot and an instruction set for operating the second robot*** to be included in the knowledgebase. Ex. 2007, ¶¶98-103. Petitioner is improperly stretching Grotmol's disclosure, as Grotmol merely discloses that "trained configuration may be loaded to one or more other robots in order to provide learned behaviors," Ex. 1004, 33:30-32, ***which is about loading the previously learned knowledge on one robot into another robot and not what claim 11***

requires: a fourth circumstance detected at least in part by the one or more sensors of the second device, and learning the fourth correlation in another learning process that includes operating the second device at least partially by another user. Ex. 2007, ¶¶92-103.

Petitioner contends that "it would be obvious that the multiple learning processes could be done by different users operating the robot." Petition, 57. But this is an unjustified leap that goes outside of Grotmol's disclosure, and Petitioner has not pointed to a prior art reference that actually discloses the limitation. Ex. 2007, ¶¶98-103. Further, claim 11 requires ***another user operating a second device, not another user operating the same device***, as Petitioner contends. *Id.*

Petitioner also contends that "it would be obvious to a POSITA that the training process involving operation of the first robot (resulting in the first trained configuration), and the training process involving operation of the second robot (resulting in another trained configuration) could be done by different users." Petition, 58. But this contention misses the point, since this argument describes a situation involving ***two*** trained configurations each stored and learned on a different robot, whereas claim 11 recites a ***single knowledgebase*** that includes ***mixed knowledge*** of correlations (i.e., first and second) learned in one learning process involving one device and one user and an ***additional correlation (i.e., fourth) learned in another learning process involving a second device and another user***.

In addition, common knowledge of a POSA may only be used to supply a missing claim limitation when that limitation is "unusually simple and the technology particularly straightforward." *Arendi S.A.R.L. v. Apple Inc.*, 832 F.3d 1355, 1361 (Fed. Cir. 2016). Petitioner has not established that the limitation at issue here, which involves having different users operate different devices in different learning processes to learn mixed knowledge into a single knowledgebase, satisfies those conditions. Using different users with different devices in different learning processes to learn mixed knowledge into a single knowledgebase would not have been straightforward or unusually simple or obvious to a POSA due to the complexities of combining the mixed knowledge into a single knowledgebase. Ex. 2007, ¶¶101-103. For example, this approach may involve combining the learned knowledge from multiple devices into a coherent knowledge structure, identifying each user to store particular learned operations and preferences in portions of the knowledgebase for user-specific autonomous operations, combining the learned knowledge from specific devices and/or users with other devices' and users' learned knowledge, and/or other issues not found in Grotmol and not obvious to a POSA. *Id.* Petitioner has not established that the limitations missing from Grotmol are unusually simple and the technology particularly straightforward. *See Arendi*, 832 F.3d at 1361.

At his deposition, Petitioner's expert confirmed that he and Petitioner failed to perform a proper obviousness analysis regarding claim 11 for Ground 2. Dr. Janet first attempted to deviate from his opinion expressed in his declaration that Grotmol in view of a POSA renders claim 11 obvious, by stating in his deposition responses that Grotmol alone anticipated claim 11. Ex. 2008, 61:13-62:2; *see also id.*, 71:14-20. This is inappropriate because Dr. Janet did not include such opinions in his declaration and the Petition does not rely on them. As discussed more fully below in Section VII, the Board should reject any attempt by Petitioner to argue that Grotmol itself anticipates (vs. rendering obvious) claim 11.

Next, Dr. Janet stated that he does not believe Grotmol lacks disclosure of any limitations of claim 11. Ex. 2008, 63:8-23, 65:25-66:24; *see also id.*, 68:23-71:20 (Dr. Janet stating that "there isn't really much" difference between Grotmol and the claimed invention of claim 11 and that a POSA "would not have to fill in those gaps" in Grotmol). This testimony confirms that Petitioner and Dr. Janet have failed to perform a proper obviousness analysis, which requires, *inter alia*, ascertaining the "differences between the prior art and the claims at issue." *Graham v. John Deere Co. of Kansas City*, 383 U.S. 1, 17-18 (1966). By failing to identify any gaps in Grotmol's disclosure with respect to the claimed features and then addressing how/why it would have been obvious to a POSA to implement those features, Petitioner and Dr. Janet have failed to provide a legally proper obviousness analysis.

The Board should reject Petitioner's arguments for claim 11 on Ground 2 for this reason alone. If Grotmol alone discloses all the features of claim 11 as Dr. Janet contends according to his deposition testimony (Patent Owner does not concede this), then the Petition (relying on Dr. Janet's declaration for support) cannot possibly have established a rationale for modifying or configuring Grotmol's process in view of the knowledge of a POSA to arrive at the claimed invention, much less any reasonable expectation of success regarding such a modification/configuration.

Dr. Janet also failed to point to specific disclosures in Grotmol for the claimed fourth correlation in claim 11 beyond the minimal disclosures discussed above. Dr. Janet's testimony confirmed that he believes Grotmol itself discloses the claimed fourth correlation in claim 11 for the same reasons that he testified with respect to claim 4. Ex. 2008, 65:25-66:6. But as discussed above, Dr. Janet's reasoning with respect to why Grotmol allegedly discloses the claimed fourth correlation is conclusory and insufficient. Dr. Janet and Petitioner were required to provide more than just a high-level mapping or description that serves as the "door," "catalyst," or "gateway" to Grotmol with respect to the claimed fourth correlation in claim 11.

Dr. Janet also attempted to supplement his opinions at his deposition by pointing to additional portions of Grotmol not addressed in his declaration, but that is inappropriate because they are not discussed in his declaration for claim 11 and the Petition does not rely on them. *See* Ex. 2008, 68:23-72:13, 73:3-14 (referencing

Grotmol regarding a "heterogeneous system" which was not discussed by Dr. Janet in his declaration).

C. Ground 3 Fails

Regarding Ground 3, Petitioner fails to show that Grotmol in view of Hickman renders claims 4 and 11 obvious. Ex. 2007, ¶¶104-129. Petitioner has failed to show that Grotmol's training sets and Hickman's shared robot knowledgebase would have been predictably combined by a POSA to arrive at the claimed inventions, as discussed below.

First, combining Hickman's shared knowledgebase with Grotmol's training sets would not have been predictable or obvious because Hickman specifically teaches away from using the claimed "fourth correlation . . ." (as recited in claims 4 and 11 and shown below). Ex. 2007, ¶¶104-105. Hickman discloses storing instruction sets and images ***separately in separate knowledgebases*** (images in Unique Object Knowledge Base 307 and instructions in Task Knowledge Base 309, *see* Ex. 1005, Fig. 3), which a POSA would have found to be incompatible with Grotmol's disclosure of training sets or correlations with images and instruction sets correlated and stored ***together***. *Id.* Further, Hickman teaches away from the claimed "fourth circumstance representation" because Hickman focuses on manipulating a single object and uses single object information and such single object information is not a circumstance representation. *Id.* In addition, instances of single object

information (where each row of the Unique Object Knowledge Base 307 disclosed in Hickman is the single object information) are learned from separate circumstances, further proving that single object information is not a circumstance representation.

Second, Petitioner has not adequately explained how the correlations and circumstance representations allegedly disclosed by Grotmol would have been combined with the knowledgebase in Hickman to arrive at the claimed invention of these claims. Ex. 2007, ¶106. Since circumstance representations and correlations of circumstance representations and instruction sets are fundamental to the operation of the system in Grotmol, ***Hickman must disclose the circumstance representations and correlations in order to be combinable with Grotmol at all***. Ex. 2007, ¶106. However, Hickman teaches away from the claimed "fourth correlation . . ." (with all of its associated features as claimed in claims 4 and 11) by disclosing images and instructions in separate knowledgebases that are not correlated. *Id.* Hickman also teaches away from circumstance representations by disclosing single object information (the information about the single object being manipulated in Hickman), which is not a circumstance representation.

Petitioner is using improper hindsight analysis and speculation to pick and choose high level concepts from each reference without sufficiently mapping each reference to each claim element to arrive at the claimed invention and explaining

why a POSA would have found the combination of these references to be predictable and operable with a reasonable expectation of success. *Id.*

Third, Petitioner fails to show that Grotmol in view of Hickman discloses or suggests all the specifically claimed elements of each of these claims. It is not adequate to merely show that Grotmol and Hickman disclose high level concepts without mapping the disclosure of the references to the specific language of the claims. Ex. 2007, ¶107. Both Grotmol and Hickman fail to disclose "***a fourth correlation*** including ***a fourth circumstance representation*** correlated with a fourth ***one or more instruction sets for operating the second device***," "a fourth circumstance ***detected at least in part by the one or more sensors of the second device***," and "at least a portion of ***the fourth correlation is learned in another learning process*** that includes . . . obtaining or receiving the fourth one or more ***instruction sets for operating the second device***," as required by claim 4, and "***a fourth correlation*** including ***a fourth circumstance representation*** correlated with a fourth one or more ***instruction sets for operating the second device***," "a fourth circumstance ***detected at least in part by the one or more sensors of the second device***," and "at least a portion ***of the fourth correlation is learned in another learning process*** that includes ***operating the second device at least partially by another user***," as required by claim 11. *Id.*

1. Claims 4 and 11: It Would Not Have Been Obvious to Combine Grotmol and Hickman to Arrive At the Claimed Invention

Petitioner's argument that it would have been obvious to combine Grotmol's training sets with Hickman's simplistic cloud storage approach uses impermissible hindsight to arrive at the claimed invention. Ex. 2007, ¶¶108-110. The specific language of claims 4 and 11 cannot be carved up and then stitched back together using the broad concepts disclosed in Grotmol and Hickman. Grotmol discloses one user operating one device in one learning process. *Id.* The knowledge gained from this process in Grotmol, when loaded into a second device, is still knowledge of one user operating one device in one learning process. *Id.* Further, Hickman's simple cloud storage of instances of single object information does not contemplate using correlations, circumstance representations, and other data structures to learn knowledge for autonomous operation as required by claims 4 and 11. Petitioner's obviousness analysis is also deficient because it fails to explain what specific claim limitation is missing from Grotmol and how Hickman discloses the missing claim limitation. "The burden is on Petitioner, not the Board, to specify with particularity how [the prior art] teaches [various claimed features]." *Amazon Web Services, Inc. v. Saint Regis Mohawk Tribe*, IPR2019-00103, Paper No. 22 at 17 (PTAB May 10, 2019).

Petitioner's use of impermissible hindsight to arrive at the claimed invention is highlighted in its statement that "[i]n the combination of Grotmol and Hickman, the shared knowledge base[] would include multiple training sets (i.e., circumstance representations correlated with instruction set) learned during the operation of multiple devices," Petition, 63. This statement is repeated almost verbatim in Dr. Janet's declaration and lacks support. Ex. 1002, ¶ 155. Petitioner is using the claimed use of correlations, multiple users, and multiple devices as a roadmap for its obviousness combination. Ex. 2007, ¶¶109-110. This is impermissible hindsight, as neither Grotmol nor Hickman, alone or in combination, discloses or suggests the claimed invention. *See TQ Delta, LLC v. Cisco Sys., Inc.*, 942 F.3d 1352, 1361 (Fed. Cir. 2019) (warning against "us[ing] the challenged patent as a roadmap to reconstruct the claimed invention using disparate elements from the prior art"). And it would not have been obvious to one skilled in the art to use Hickman's simple cloud storage method disclosing no circumstance representations and correlations with Grotmol's single-device training sets to arrive at the inventions of claims 4 and 11.

While the Board indicated that "Hickman's shared robot knowledge base could have advantageously been paired with Grotmol's autonomous robotic system to further facilitate the sharing of learned behaviors," Decision, 53, Petitioner's proposed combination would also not have been obvious because Hickman teaches

away from the claimed invention. Ex. 2007, ¶¶109-110. Specifically, as shown in Figure 3 from Hickman below, Hickman teaches that images are stored in one knowledgebase 307 while instruction sets are stored ***separately*** (***i.e., uncorrelated***) in another knowledgebase 309. Ex. 1005, 13:64-21:39. In light of this storage structure, and that Grotmol allegedly discloses that training sets stored in memory include correlated images and instruction sets that are stored ***together***, Ex. 1004, 3:35-49, Hickman teaches away from the claimed "fourth correlation" as claimed in claims 4 and 11, and a POSA would not have been motivated to combine Grotmol and Hickman in the manner proposed by Petitioner. Ex. 2007, ¶¶109-110. Further, Hickman also teaches away from the fourth circumstance representation since single object information stored in each row of Unique Object Knowledge Base 307 in Hickman is not a circumstance representation as discussed above. Ex. 2007, ¶110.

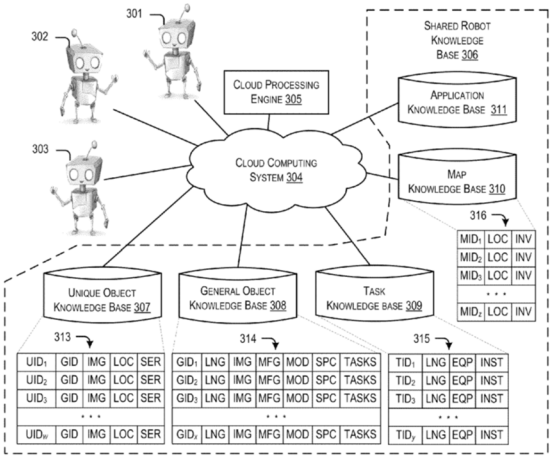

FIGURE 3

Ex. 1005, Fig. 3.

Finally, Petitioner has failed to carry its burden to prove obviousness by showing which specific claim elements are disclosed by each of the cited references. ***The Petition must provide an understandable explanation of the element-by-element specifics of the patentability challenges, and here it does not.*** *See* 35 U.S.C. § 312(a)(3); 37 C.F.R. §§ 42.22(a)(2), 42.104(b)(3)-(4). The Petitioner has failed to provide the required explanation and thus the Petition should be rejected.

2. Claim 4: Grotmol and Hickman Do Not Disclose or Suggest a Knowledgebase Including a Fourth Correlation Learned in Another Learning Process Involving a Second Device

Claim 4 depends from claim 1 and requires, among other things:

> wherein the knowledgebase further includes ***a fourth correlation including a fourth circumstance representation correlated with a fourth one or more instruction sets for operating the second device***, and wherein ***the fourth circumstance representation represents a fourth circumstance detected at least in part by the one or more sensors of the second device***, and wherein at least a portion of the fourth correlation is learned ***in another learning process*** that includes: generating or receiving ***the fourth circumstance representation***; and obtaining or receiving the fourth one or more ***instruction sets for operating the second device***.

Ex. 1001, Claim 4.

Hickman's failure to disclose and teaching away from fundamental elements including the claimed circumstance representation as well as a correlation of the

claimed circumstance representation with the claimed instruction set as discussed above confirms that Hickman cannot be used to provide any missing elements from Grotmol. Ex. 2007, ¶¶111-120.

In addition, Grotmol and Hickman first fail to disclose "***a fourth correlation*** including ***a fourth circumstance representation correlated with a fourth one or more instruction sets for operating the second device***." Ex. 2007, ¶¶113-120. Petitioner argues that "Grotmol discloses that the memory component of a first robot can store the claimed first and second correlations as well as a fourth correlation learned from operating a second robot—i.e., a circumstance detected by the sensor of a second robot correlated with instructions for operating that second robot." Petition, 62. However, the inquiry here is not what a robot in Grotmol can or cannot store, but what Grotmol actually discloses the robot storing. This argument is Petitioner's own words not supported in Grotmol and is conclusory. As discussed above with respect to claim 4 in Ground 1, Grotmol discloses one user operating one device in one learning process and even when loaded into a second device, this is still knowledge of ***one user operating one device in one learning process*** that does not disclose the claimed fourth correlation including a fourth circumstance representation correlated with a fourth instruction set for operating the second device. Ex. 2007, ¶¶113-120. Hickman, on the other hand, does not disclose or suggest (and further teaches away from) correlations and circumstance

representations at all, as discussed above and as required by claim 4. *Id.* Hickman discloses ***storing images and instructions separately in separate knowledgebases (see Ex. 1005, Fig. 3) that is not a correlation as well as a single object information that is not a circumstance representation***. Hence, Hickman does not disclose or suggest (and further teaches away from) ***any*** correlations including ***any*** circumstance representations correlated with any instruction sets, let alone the fourth correlation ***including a fourth circumstance representation correlated with a fourth one or more instruction sets for operating the second device***. *Id.*

Grotmol and Hickman next fail to disclose the "***fourth circumstance representation represents a fourth circumstance detected at least in part by the one or more sensors of the second device***." Ex. 2007, ¶114. Petitioner argues that "Grotmol discloses . . . a circumstance detected by the sensor of a second robot correlated with instructions for operating that second robot." Petition, 62. This argument is Petitioner's own words not supported in Grotmol and is conclusory. Grotmol discloses one user operating one device in one learning process and even when loaded into a second device, this is still knowledge of ***one user operating one device in one learning process*** that does not disclose detecting a circumstance with a sensor of a second device. Ex. 2007, ¶¶114-120. Hickman on the other hand discloses ***a single object information that is not a circumstance representation***. Ex. 2007, ¶114. Hence, Hickman does not disclose or suggest detecting any

circumstances, let alone detecting a circumstance with a sensor of a second device. Ex. 2007, ¶¶114-120.

Further, Grotmol and Hickman further fail to disclose "at least a portion of the fourth correlation is learned ***in another learning process*** that includes: generating or receiving ***the fourth circumstance representation***; and obtaining or receiving the fourth one or more ***instruction sets for operating the second device."*** Ex. 2007, ¶¶115-120. Grotmol discloses one user operating one device in one learning process and even when loaded into a second device, this is still knowledge of ***one user operating one device in one learning process*** that does not disclose the claimed another learning process involving instruction sets for operating a second device. Ex. 2007, ¶115. Although Hickman, on the other hand, discloses a cloud system that can generally learn from multiple devices, Hickman still discloses only a single object information (not a circumstance representation) and separate (i.e., uncorrelated) instructions that do not disclose a correlation, let alone a correlation that includes a circumstance representation correlated with an instruction set. Ex. 2007, ¶¶115-120. Hence, Hickman does not disclose or suggest (and further teaches away from) ***any*** circumstance representations and ***any*** correlations, let alone the claimed fourth correlation including the fourth circumstance representation, and let alone that it is specifically learned in another learning process that includes instruction sets for operating a second device. *Id.*

Petitioner's attempt to stitch together high level concepts from Grotmol and Hickman to arrive at the claimed invention is improper and fails to adequately and properly explain how each specifically claimed element of claim 4 is disclosed by either reference. Ex. 2007, ¶¶111-120. Petitioner's claim that Grotmol's training sets could be combined with Hickman to arrive at the claimed fourth correlation is not correct. Petition, 61-63; Ex. 2007, ¶¶ 111-120. The claimed fourth correlation must include "one or more ***instruction sets for operating the second device***," a "***fourth circumstance representation***" that represents "***a fourth circumstance detected at least in part by the one or more sensors of the second device***," and "must be ***learned in another learning process*** that includes . . . obtaining or receiving the fourth one or more ***instruction sets for operating the second device***." As the Board has recognized, Grotmol does not disclose these features and discloses nothing "more than loading a trained configuration from a first robot to a second robot." Decision, 35. And the simple knowledgebase in Hickman never discloses or suggests (and further teaches away from) anything like a correlation with a circumstance representation and instruction set for operating a second device or the other specifically claimed elements of the fourth correlation. Ex. 2007, ¶¶111-120. Further, both references fail to disclose learning portions of correlations in different learning processes and integrating them in a seamless manner. *Id.*

The Board indicated that "Petitioner relies on Hickman to teach the use of a shared knowledgebase with learned multiple behaviors from multiple robots," and that "Petitioner relies on Grotmol to disclose circumstance representations correlated with the various instruction sets." Decision, 56-57. But this combination of high level concepts fails to disclose the invention as claimed. Claim 4 encompasses more than simply the combination of an additional correlation in a shared knowledgebase. Ex. 2007, ¶¶117-120. The specific limitations of claim 4 provide that the fourth correlation must include ***one or more instruction sets*** "***for operating the second device***," a "***fourth circumstance representation***" that represents "***a fourth circumstance detected at least in part by the one or more sensors of the second device***," and "***must be learned in another learning process that includes obtaining or receiving the fourth one or more instruction sets for operating the second device***." The claim requires instruction sets for operating a specific second device, a circumstance detected by that specific second device, and a specific another learning process involving the second device. *Id.* While Hickman discloses additional devices performing certain functions and Grotmol discloses training sets, neither reference discloses any of these specifically claimed limitations. *Id.*

Hickman does not disclose the claimed correlations at all, much less as they are specifically claimed in claim 4, including how those correlations are used in a knowledgebase to autonomously operate a device, as required by claim 4. Ex. 2007,

¶¶118-120. Hickman does not teach (and further teaches away from) correlations of circumstance representations with instruction sets, let alone correlations specifically claimed in claims 4 and 11 such as correlated circumstance representations detected by a particular (i.e., second) device, correlated instruction sets for operating a specific (i.e., second) device, and at least portions of the correlations learned in another learning process that involves a second device.

Further, Hickman fails to disclose circumstance representations at all, as the single objects in Hickman do not represent a circumstance and are not included in a circumstance representation but in separate single object rows (including single object information learned from separate circumstances) of the Unique Object Knowledgebase 307 as shown in Figure 3 of Hickman. Ex. 2007, ¶¶118-120. Hickman also fails to disclose (and further teaches away from) any correlations since images and instructions are stored in separate knowledgebases (Unique Object Knowledge Base 307 and Task Knowledge Base 309 knowledgebases) and are uncorrelated as shown in Figure 3 of Hickman. *Id.* As a result, Grotmol in view of Hickman does not disclose or suggest all the features of claim 4.

Petitioner's expert's testimony confirmed that he and Petitioner failed to perform a proper obviousness analysis regarding claim 4 for Ground 3. Dr. Janet again attempted to deviate from his declaration opinion that Grotmol in view of Hickman renders claim 4 obvious, responding that Grotmol itself discloses all the

elements of claim 4. Ex. 2008, 79:4-10; 93:12-17, 93:24-94:2. But Dr. Janet did not include such opinions in his declaration and the Petition does not rely on them. As discussed more fully below in Section VII, the Board should reject any attempt by Petitioner to argue that Grotmol itself anticipates claim 4.

In addition, when Dr. Janet was asked repeatedly which specific claim element(s) Grotmol was missing and which element(s) he was introducing Hickman for as a secondary reference, he was evasive and refused to directly answer the questions. Ex. 2007, 95:15-96:19. When asked where in his declaration he identified any gaps in Grotmol's disclosure regarding the claim language, he refused to directly answer the question. *Id.*, 102:2-103:25. He stated that "Hickman provides the reader with additional clarity" regarding the invention but did not explain how he used Hickman's disclosure in an obviousness analysis. *Id.*, 101:8-23. He also stated that Grotmol does not lack disclosure of any of the elements of claim 4, *id.*, 101:8-16, and that "Hickman really wasn't necessary." *Id.*, 105:15-16.

When asked to identify where in his declaration he identified which specific claim limitation(s) was not disclosed by Grotmol, Dr. Janet was evasive and could not point to specific claim language in any of the paragraphs of his report that he discussed for claim 4. *Id.*, 105:18-108:6. He was also evasive when asked to explain his mapping regarding Hickman regarding the specific language of the claims. *Id.*, 132:11-140:9. And when asked where in Hickman a specific claim limitation was

disclosed, he pointed to several paragraphs in his report and cited their "generic utility" but failed to identify where in those paragraphs the reference disclosed the specific claim limitation at issue. *Id.*, 143:21-144:13. By failing to identify the missing features of Grotmol and how/why it would have been obvious in view of Hickman to modify Grotmol's process to implement those features, Petitioner and Dr. Janet have failed to provide a proper obviousness analysis. The Board should reject Petitioner's arguments for claim 4 in Ground 3 for this reason alone.

Moreover, Dr. Janet agreed that Hickman discloses storing images and instructions in different databases, Ex. 2008, 82:2-83:14. This supports Patent Owner's argument that a POSITA would not have combined Hickman with Grotmol to arrive at the claimed invention of claim 4. And Dr. Janet was unable to identify what elements from Hickman were actually correlated regarding the claimed correlations. Ex. 2008, 83:15-92:11. As a result, Petitioner has failed to show that Hickman discloses any claimed correlation not disclosed by Grotmol. Dr. Janet also attempted to supplement his opinions at his deposition by pointing to additional portions of Hickman not addressed in his declaration, *see id.*, 131:18-22 (discussing Figure 3 of Hickman), but that is inappropriate because he did not include such opinions in his declaration and the Petition does not rely on them. Dr. Janet also strained credibility when he testified that certain portions of Hickman, including

Figure 3, were somehow implicitly referenced in paragraphs of his declaration that did not explicitly mention those portions of Hickman. *Id.*, 131:23-132:10.

For all the foregoing reasons, Dr. Janet's testimony should be accorded little or no weight regarding his obviousness analysis.

3. Claim 11: Grotmol and Hickman Do Not Disclose or Suggest the Claimed Fourth Correlation, Second Device and Another User

Claim 11, which depends from claim 1, provides for multiple users and a second device and recites:

> ***wherein the knowledgebase further includes a fourth correlation including a fourth circumstance representation correlated with a fourth one or more instruction sets for operating the second device***, and wherein ***the fourth circumstance representation represents a fourth circumstance detected at least in part by the one or more sensors of the second device***, and wherein at least a portion of ***the fourth correlation is learned in another learning process*** that includes ***operating the second device*** at least partially ***by another user***.

Ex. 1001, Claim 11 (emphasis added).

Hickman's failure to disclose and teaching away from fundamental elements including a circumstance representation as well as a correlation of a circumstance representation with an instruction set confirms that Hickman cannot be used to provide any missing elements from Grotmol. Ex. 2007, ¶¶121-129.

In addition, Grotmol and Hickman first fail to disclose "***a fourth correlation including a fourth circumstance representation correlated with a fourth one or more instruction sets for operating the second device***." Ex. 2007, ¶¶123-129. As discussed above with respect to claim 4 in Ground 3, Grotmol discloses one user operating one device in one learning process and even when loaded into a second device, this is still knowledge of ***one user operating one device in one learning process*** that does not disclose the claimed fourth correlation including a fourth circumstance representation correlated with a fourth instruction set for operating the second device. *Id.* Hickman, on the other hand, discloses ***storing images and instructions separately in separate knowledgebases (see Ex. 1005, Fig. 3) that is not a correlation as well as a single object information that is not a circumstance representation***. Hence, Hickman does not disclose or suggest (and further teaches away from) ***any*** correlations including ***any*** circumstance representations correlated with ***any*** instruction sets, let alone the claimed fourth ***correlation including a fourth circumstance representation correlated with a fourth one or more instruction sets for operating the second device***. *Id.*

Grotmol and Hickman next fail to disclose "***wherein the fourth circumstance representation represents a fourth circumstance detected at least in part by the one or more sensors of the second device***." Ex. 2007, ¶¶124-129. Petitioner argues that Grotmol discloses a circumstance detected by the sensor of a second robot correlated

with instructions for operating that second robot. Petition, 64. This argument is Petitioner's own words not supported by Grotmol and is conclusory. Grotmol discloses one user operating one device in one learning process and even when loaded into a second device, ***this is still knowledge of one user operating one device in one learning process*** that does not disclose detecting a circumstance with a sensor of a second device. Ex. 2007, ¶¶124-129. Hickman, on the other hand, discloses a ***single object information that is not a circumstance representation***. *Id.* Hence, Hickman does not disclose or suggest detecting any circumstances, let alone detecting a circumstance with a sensor of a second device. *Id.*

Grotmol and Hickman fail to disclose that "at least a portion of ***the fourth correlation is learned in another learning process that includes operating the second device at least partially by another user***." Ex. 2007, ¶¶125-129. Grotmol discloses ***one user operating one device in one learning process*** and even when loaded into a second device, this is still knowledge of one user operating one device in one learning process that does not disclose the claimed another learning process involving a second device operated by another user. *Id.* And although Hickman, on the other hand, discloses a cloud system that can generally learn from multiple devices, Hickman still discloses only a single object information (not a circumstance representation) and separate (i.e., uncorrelated) instructions that do not disclose a correlation, let alone a correlation that includes a circumstance representation

correlated with an instruction set. Hence, Hickman does not disclose or suggest (and further teaches away from) ***any*** circumstance representations and ***any*** correlations, let alone the claimed fourth correlation including the fourth circumstance representation, and let alone that it is specifically learned in another learning process that includes operating a second device by another user. *Id.*

For reasons similar to those discussed with respect to claim 4 for Ground 3, Petitioner cannot stitch together the general concepts of Hickman and Grotmol to arrive at the invention of claim 11. Ex. 2007, ¶¶126-129. Petitioner contends that Grotmol discloses the claimed "fourth correlation," "second device," and "another user" of claim 11, Petition, 64, but as discussed above regarding claim 11 in Ground 1 and claim 4 in Ground 3, Grotmol does not disclose or suggest the claimed "fourth correlation," "another user" and the "second device" recited in claim 11. Ex. 2007, ¶¶126-129. Grotmol does not disclose or suggest that the knowledgebase includes the claimed fourth correlation learned in another learning process involving the second device and another user. *Id.*

As discussed above regarding claim 4, Grotmol discloses one user operating one device in one learning process. Ex. 2007, ¶127. The knowledge gained from this process in Grotmol, when loaded into a second device, is still knowledge of one user operating one device in one learning process. *Id.* ***Grotmol does not disclose or suggest a knowledgebase that includes mixed knowledge of a first correlation and***

second correlation learned involving one device in one learning process with one user and a fourth correlation learned involving a second device in another learning process with another user. Ex. 2007, ¶¶127-129.

Hickman also does not disclose or suggest (and further teaches away from) the claimed circumstance representations and correlations including the fourth correlation learned in another learning process involving the second device operated by another user, as required by claim 11. Ex. 2007, ¶¶128-129. Hickman discloses a cloud system that can generally learn from multiple devices, but it does not disclose anything like the specific limitations including the claimed ***first and second correlations learned involving one device in one learning process with one user and the fourth correlation learned involving a second device in a second learning process with another user***. *Id.* Further, Hickman fails to disclose circumstance representations at all since the single objects in Hickman do not represent a circumstance and are not included in a circumstance representation but in separate single object rows (including single object information learned from separate circumstances) of the Unique Object Knowledgebase 307 as shown in Figure 3 of Hickman. *Id.* Hickman also fails to disclose any correlations since images and instructions are stored in separate knowledgebases (Unique Object Knowledge Base 307 and Task Knowledge Base 309) and are uncorrelated as shown in Figure 3 of Hickman.

Like claim 4, claim 11 specifically requires a fourth correlation with specific elements. Ex. 2007, ¶129. These elements include ***a fourth circumstance representation*** and a fourth one or more ***instruction sets for operating the second device***. In addition, the fourth circumstance representation must represent ***a fourth circumstance detected at least in part by the one or more sensors of the second device***. Further, the fourth correlation must be learned in ***another learning process*** that includes ***operating the second device*** at least partially ***by another user***. None of these elements are disclosed by Grotmol or Hickman for the same reasons discussed above with respect to claim 4, and claim 11 also includes the claimed "another user," which neither reference discloses as well.

For all of the Challenged Claims, the language of the claim governs, and not Petitioner's summary distillation of the claim language and the disclosure of certain references. Grotmol in view of Hickman does not disclose or suggest the features of claim 11 and Petitioner has failed to clearly and properly map the specific language of the claims to the alleged disclosures of the prior art, and thus its arguments should be rejected.

Dr. Janet's deposition testimony confirmed that he and Petitioner failed to perform a proper obviousness analysis regarding claim 11 for Ground 3. Petitioner's expert attempted to deviate from his opinion that Grotmol in view of Hickman renders claim 11 obvious, responding that Grotmol itself discloses all the elements

of claim 11. Ex. 2008, 148:20-150:24. But Dr. Janet did not include such opinions in his declaration and the Petition does not rely on them. As discussed more fully below in Section VII, the Board should reject any attempt by Petitioner to argue that Grotmol itself anticipates claim 11.

Further, the failures with respect to Dr. Janet's analysis of claim 4 under Ground 3 noted above in Section VI.C.2 are also applicable to his analysis of claim 11 under Ground 3. Dr. Janet specifically testified that his analysis of claim 4 applies to the similar limitations of claim 11. *Id.*, 160:23-161:19. By failing to identify any claimed features that Grotmol does not disclose and how it would have been obvious in view of Hickman to implement such features in Grotmol's process, Petitioner and Dr. Janet have failed to provide a legally sufficient obviousness analysis for claim 11 (like for claim 4). The Board should reject Petitioner's arguments for claim 11 in Ground 3 for this reason alone.

VII. PETITIONER'S OBVIOUSNESS ANALYSIS IN GROUNDS 2 AND 3 IS FAULTY

Grounds 2 and 3, which the Petition characterizes as obviousness grounds under 35 U.S.C. § 103 (Petition, 3-4), lack the required obviousness analysis—which is a fatal flaw for an obviousness ground. *In re Kahn*, 441 F. 3d 977, 988 (Fed. Cir. 2006) ("[R]ejections on obviousness grounds cannot be sustained by mere conclusory statements; instead, there must be some articulated reasoning with some rational underpinning to support the legal conclusion of obviousness"). In Grounds

2 and 3 of the Petition, there is no articulated reasoning regarding what specific elements of claims 4 and 11 Grotmol (the basis for single-reference obviousness in Ground 2, and the base reference for Ground 3) does not disclose. Consequently, the Petition's analysis for Grounds 2 and 3 is deficient with respect to those claims.

In addition, Petitioner and its expert attempt to have their cake and eat it too, purportedly pursuing obviousness grounds for claims 4 and 11 (and no anticipation grounds for these claims) even though Petitioner's expert testified at his deposition that Grotmol itself discloses all the elements of Claims 4 and 11. The Board should not permit Petitioner to somehow change Grounds 2 and 3 to anticipation grounds in a manner that deprives Patent Owner of notice under the Administrative Procedure Act (APA), 5 U.S.C. §§ 551-559.

A. Ground 2

As discussed above with respect to Claim 11 and Ground 2, Petitioner has failed to perform a proper obviousness analysis because Petitioner has failed to identify anything in that claim that Grotmol lacks disclosure of for Ground 2. A proper obviousness analysis requires ascertaining the "differences between the prior art and the claims at issue." *Graham*, 383 U.S. at 17-18. The Petition fails to specifically identify any claimed features that are not disclosed in Grotmol. Petition, 56-58. Further, at his deposition, Dr. Janet admitted that he did not believe Grotmol failed to disclose any limitations of claim 11. Ex. 2008, 63:8-23, 65:25-66:24; *see*

also id., 68:23-71:20 (Dr. Janet stating that "there isn't really much" difference between Grotmol and the claimed invention and that a POSA "would not have to fill in those gaps" in Grotmol). This testimony confirms that Petitioner and Dr. Janet have failed to perform a proper obviousness analysis because they failed to identify the missing features of Grotmol and consequently how it would have been obvious to use the knowledge of a POSA to fill those gaps. Thus, Petitioner cannot prevail on obviousness.

Petitioner also cannot prevail on anticipation for claim 11. Ground 2 is not an anticipation ground, and the Board cannot deviate from the Petition, because "it is the petition . . . that defines the metes and bounds of an inter partes review." *Koninklijke Philips N.V. v. Google LLC*, 948 F.3d 1330, 1336 (Fed. Cir. 2020) (citing *SAS Inst. Inc. v. Iancu*, 138 S. Ct. 1348, 1355 (2018)); *see also Koninklijke*, 948 F.3d at 1336 ("[T]he Board does not 'enjoy[] a license to depart from the petition and institute a different inter partes review of his own design.'"). The present situation is akin to *Koninklijke*, where Google's petition did not advance an argument of unpatentability based on a certain ground and the Federal Circuit held the Board improperly instituted IPR based on that ground. Here, Petitioner has not advanced a ground of anticipation by Grotmol for claim 11 and Ground 2 and thus the Board cannot find anticipation by Grotmol for that claim.

As explained above, the Petition cannot be the basis for finding claim 11 unpatentable under either obviousness or anticipation. That legal limbo is entirely of Petitioner's own making, because Petitioner had the opportunity to draft its Petition however it wanted and yet opted to proceed with obviousness grounds for claim 11 that lack proper obviousness analysis. "The burden is on Petitioner, not the Board, to specify with particularity how [the prior art] teaches [various claimed features]." *Amazon Web Services, Inc.*, IPR2019-00103, Paper No. 22 at 17.

The futility of the Petition for claim 11 under both obviousness and anticipation is not some hyperliteral technicality that the Board may overlook, but rather goes to the heart of the procedural requirements imposed on the Board by the APA. Indeed, in another IPR much like the present one, the Federal Circuit held that the Board "deviated impermissibly from the invalidity theory set forth in [the petitioner's] petition when it held that [a certain claim] was anticipated by [a certain prior art reference]" that was not specified as an anticipatory reference in a ground of that IPR. *M&K Holdings, Inc. v. Samsung Elecs. Co.*, 985 F.3d 1376, 1385 (Fed. Cir. 2021). The Court explained that the underlying concern in its decision was that if the Board "departed markedly from the evidence and theories presented by the petition or institution decision, [that would] creat[e] unfair surprise." *Id.* at 1384. Here, Patent Owner relied upon the Petition to craft its strategy (e.g., regarding deposing Petitioner's expert, preparing this Response, etc.), and a finding of

anticipation by the Board (even if the Board characterizes it as obviousness, like in *M&K Holdings*) would constitute unfair surprise that impermissibly deprives Patent Owner of notice under the APA

In sum, Petitioner could have drafted its Petition more clearly to include an anticipation ground for claim 11, or to include actual obviousness analysis instead of isolated, conclusory statements, but failed to do so. This failure dooms Petitioner's arguments regarding Ground 2.

B. Ground 3

Petitioner has similarly failed to provide proper obviousness analysis for Ground 3 and cannot rely on anticipation arguments for this ground as well. As discussed above in Section VI.C with respect to Claims 4 and 11 and Ground 3, Petitioner has failed to identify anything missing in the primary reference for Ground 3. A proper obviousness analysis requires ascertaining the "differences between the prior art and the claims at issue." *Graham*, 383 U.S. at 17-18. The Petition fails to specifically identify any limitation(s) of claims 4 and 11 not disclosed by Grotmol, the primary reference of the obviousness combination. Petition, 61-66. Further, at his deposition, Dr. Janet admitted that he did not believe Grotmol failed to disclose any limitations of claim 4 or claim 11. Ex. 2008, 63:8-23, 65:25-66:24; *see also id.*, 79:4-10; 93:12-17, 93:24-94:2. This testimony confirms that Petitioner and Dr. Janet have failed to perform a proper obviousness analysis because they failed to identify

the claimed features not taught by Grotmol and how/why it would have been obvious in view of Hickman to implement such features.

Petitioner also cannot prevail on anticipation for claims 4 and 11 for similar reasons as discussed above in Section VII.A regarding claim 11. Ground 3 is not an anticipation ground, and the Board cannot deviate from the Petition, because "it is the petition … that defines the metes and bounds of an inter partes review." *Koninklijke*, 948 F.3d 1330, 1336. Here, Petitioner has not advanced a ground of anticipation by Grotmol for claims 4 and 11 and thus the Board cannot find anticipation by Grotmol for those claims. Indeed, a finding of anticipation by the Board (even if the Board characterizes it as obviousness, like in *M&K Holdings*) would constitute unfair surprise that impermissibly deprives Patent Owner of notice under the APA, for the reasons discussed above in Section VII.A.

In sum, Petitioner could have drafted its Petition more clearly to include an anticipation ground for claims 4 and 11, or to include actual obviousness analysis instead of isolated, conclusory statements, but failed to do so. This failure dooms Petitioner's arguments regarding Ground 3.

VIII. CONCLUSION

For the foregoing reasons, Petitioner has failed to prove by a preponderance of the evidence that any of the Challenged Claims are unpatentable. Patent Owner

respectfully requests that the Board confirm the patentability of the Challenged Claims and enter judgment against Petitioner.

Dated: March 7, 2024

Respectfully submitted,

/Arvind Jairam/

Arvind Jairam
Reg. No. 62,759
AJairam@mckoolsmith.com
Stuart McCommas
Reg. No. 71,834
SMccommas@mckoolsmith.com
MCKOOL SMITH, P.C.
1999 K St. NW, Suite 600
Washington, DC 20006
Telephone: (202) 370-8300
Facsimile: (202) 370-8344

George Fishback
Reg. No. 76,345
GFishback@mckoolsmith.com
MCKOOL SMITH, P.C.
303 Colorado Street, Suite 2100
Austin, TX 78701
Telephone: (512) 692-8700
Facsimile: (512) 692-8744

Counsel for Patent Owner

CERTIFICATION OF WORD COUNT

The undersigned hereby certifies that the portions of the above-captioned **PATENT OWNER'S RESPONSE** specified in 37 C.F.R. § 42.24 have 13,281 words, in compliance with the 14,000 word limit set forth in 37 C.F.R. §42.24(b)(1). This word count was prepared using Microsoft Word 2016.

Dated: March 7, 2024

By: */Arvind Jairam/*
Arvind Jairam, Reg. No. 62,759

CERTIFICATION OF SERVICE

The undersigned hereby certifies that a copy of this **PATENT OWNER'S RESPONSE** and supporting exhibits have been served on Petitioner via email on the following counsel of record for Petitioner:

W. Karl Renner
Nicholas W. Stephens
Usman Khan
Matthew Colvin
Fish & Richardson P.C.
60 South Sixth Street, Suite 3200
Minneapolis, MN 55402
Email: IPR49649-0026IP1@fr.com

Dated: March 7, 2024

By: */Arvind Jairam/*
Arvind Jairam, Reg. No. 62,759