US009335766B1

(12) **United States Patent**
Silver et al.

(10) **Patent No.: US 9,335,766 B1**
(45) **Date of Patent: May 10, 2016**

(54) **STATIC OBSTACLE DETECTION**

(71) Applicant: **Google Inc.**, Mountain View, CA (US)

(72) Inventors: **David Harrison Silver**, Millbrae, CA (US); **Jonathan Baldwin Dowdall**, Oakland, CA (US); **David Ian Franklin Ferguson**, San Francisco, CA (US)

(73) Assignee: **Google Inc.**, Mountain View, CA (US)

(*) Notice: Subject to any disclaimer, the term of this patent is extended or adjusted under 35 U.S.C. 154(b) by 110 days.

(21) Appl. No.: **14/099,004**

(22) Filed: **Dec. 6, 2013**

(51) **Int. Cl.**
G05D 1/02 (2006.01)
G01V 11/00 (2006.01)

(52) **U.S. Cl.**
CPC ***G05D 1/021*** (2013.01); ***G01V 11/00*** (2013.01)

(58) **Field of Classification Search**
None
See application file for complete search history.

(56) **References Cited**

U.S. PATENT DOCUMENTS

6,535,114 B1 * 3/2003 Suzuki G06T 7/004 340/435
6,834,232 B1 12/2004 Malhotra
8,259,998 B2 9/2012 Okugi et al.
2006/0178830 A1 * 8/2006 Sherony G01S 11/12 701/301
2007/0046450 A1 * 3/2007 Iwama G01S 11/12 340/436
2009/0033745 A1 * 2/2009 Yeredor G01S 3/7864 348/152
2010/0104199 A1 * 4/2010 Zhang G06K 9/00798 382/199
2010/0202657 A1 * 8/2010 Salgian G06K 9/00805 382/103
2011/0187863 A1 * 8/2011 Glander G01S 13/931 348/148
2011/0293190 A1 * 12/2011 O'Callaghan G06T 7/20 382/197
2012/0269382 A1 * 10/2012 Kiyohara G01C 21/26 382/103
2013/0031045 A1 * 1/2013 James G06N 7/005 706/52
2013/0216094 A1 8/2013 Delean
2013/0301876 A1 * 11/2013 Hugosson G06K 9/00288 382/103

* cited by examiner

Primary Examiner — John R Olszewski
Assistant Examiner — Jess Whittington
(74) *Attorney, Agent, or Firm* — McDonnell Boehnen Hulbert & Berghoff LLP

(57) **ABSTRACT**

A vehicle is provided that may distinguish between dynamic obstacles and static obstacles. Given a detector for a class of static obstacles or objects, the vehicle may receive sensor data indicative of an environment of the vehicle. When a possible object is detected in a single frame, a location of the object and a time of observation of the object may be compared to previous observations. Based on the object being observed a threshold number of times, in substantially the same location, and within some window of time, the vehicle may accurately detect the presence of the object and reduce any false detections.

17 Claims, 6 Drawing Sheets

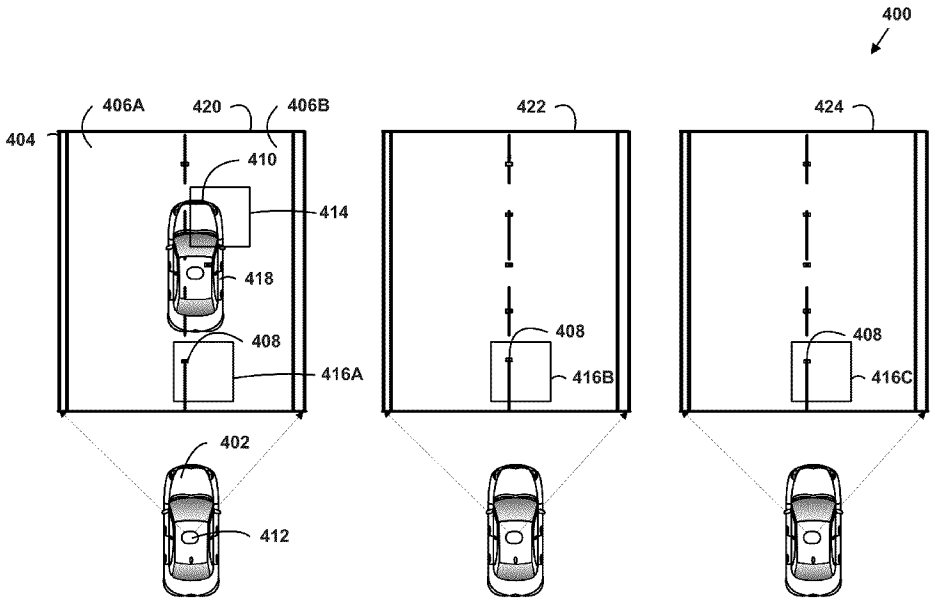

TESLA 1016
Tesla, Inc. v. Autonomous Devices LLC
IPR2023-01054

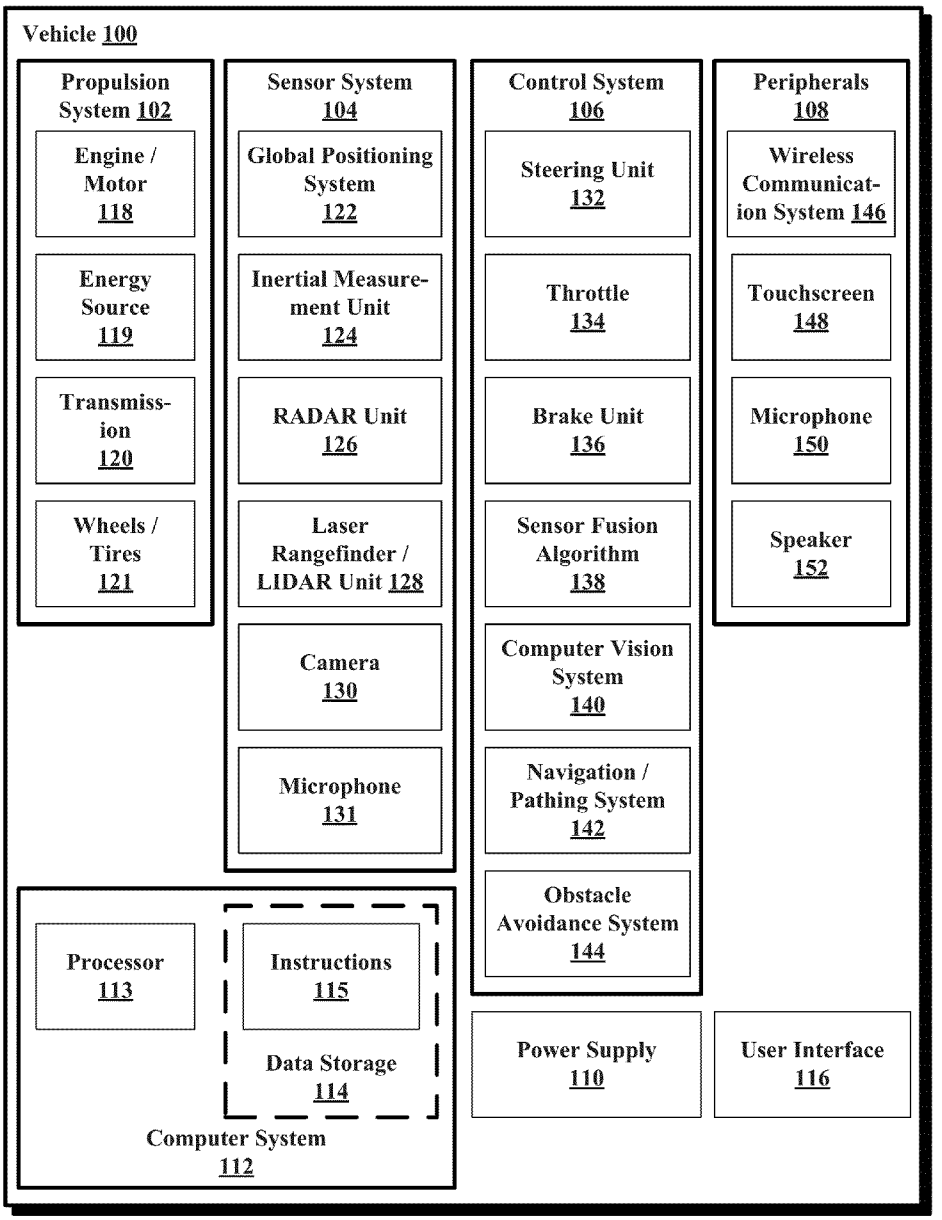
Vehicle 100
Propulsion System 102
Engine / Motor 118
Energy Source 119
Transmission 120
Wheels / Tires 121
Sensor System 104
Global Positioning System 122
Inertial Measurement Unit 124
RADAR Unit 126
Laser Rangefinder / LIDAR Unit 128
Camera 130
Microphone 131
Control System 106
Steering Unit 132
Throttle 134
Brake Unit 136
Sensor Fusion Algorithm 138
Computer Vision System 140
Navigation / Pathing System 142
Obstacle Avoidance System 144
Peripherals 108
Wireless Communication System 146
Touchscreen 148
Microphone 150
Speaker 152
Processor 113
Instructions 115
Data Storage 114
Computer System 112
Power Supply 110
User Interface 116

Fig. 1

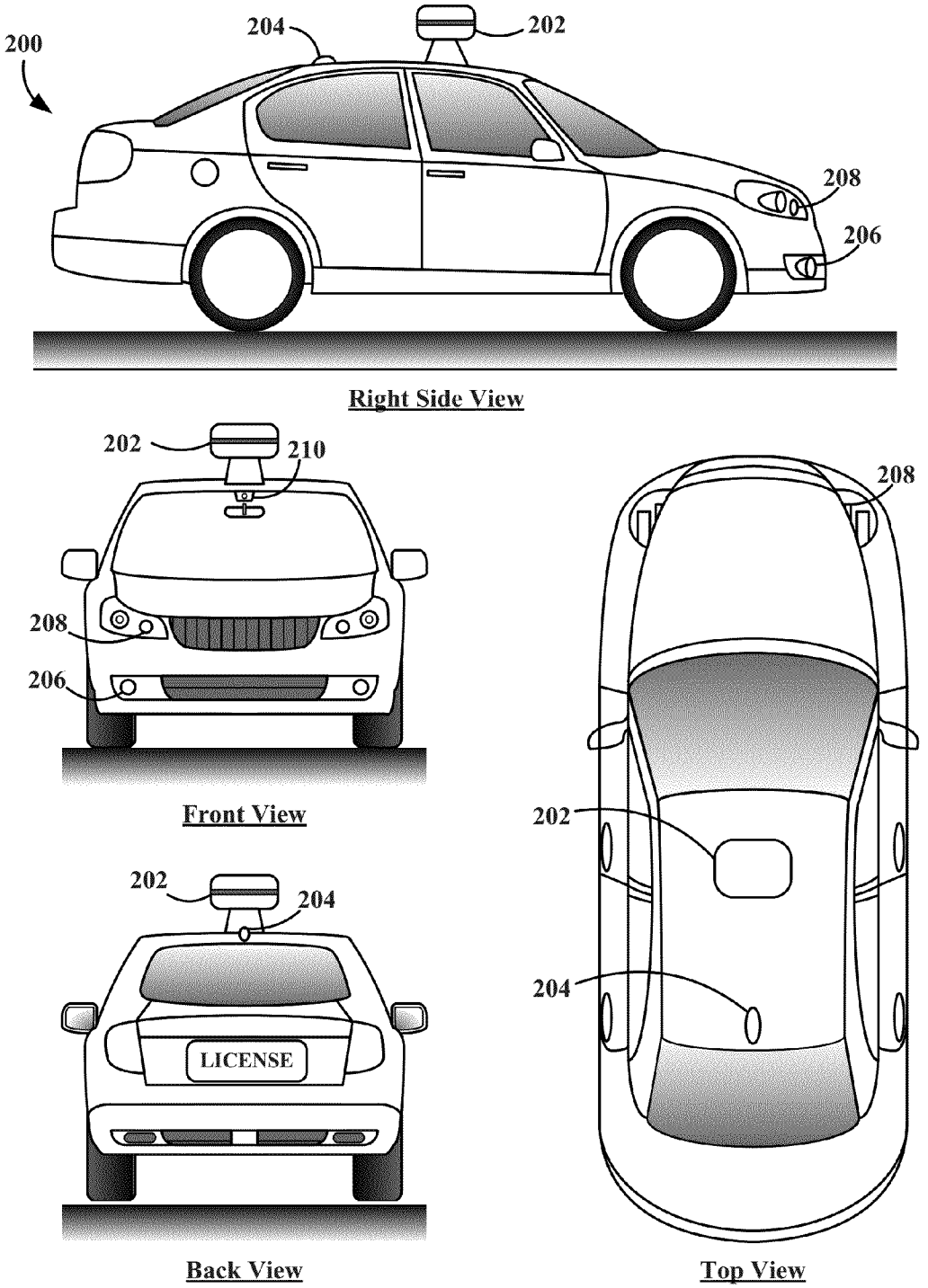
200
204
202
208
206
Right Side View
202
210
208
206
Front View
208
202
204
LICENSE
Back View
202
204
Top View

Fig. 2

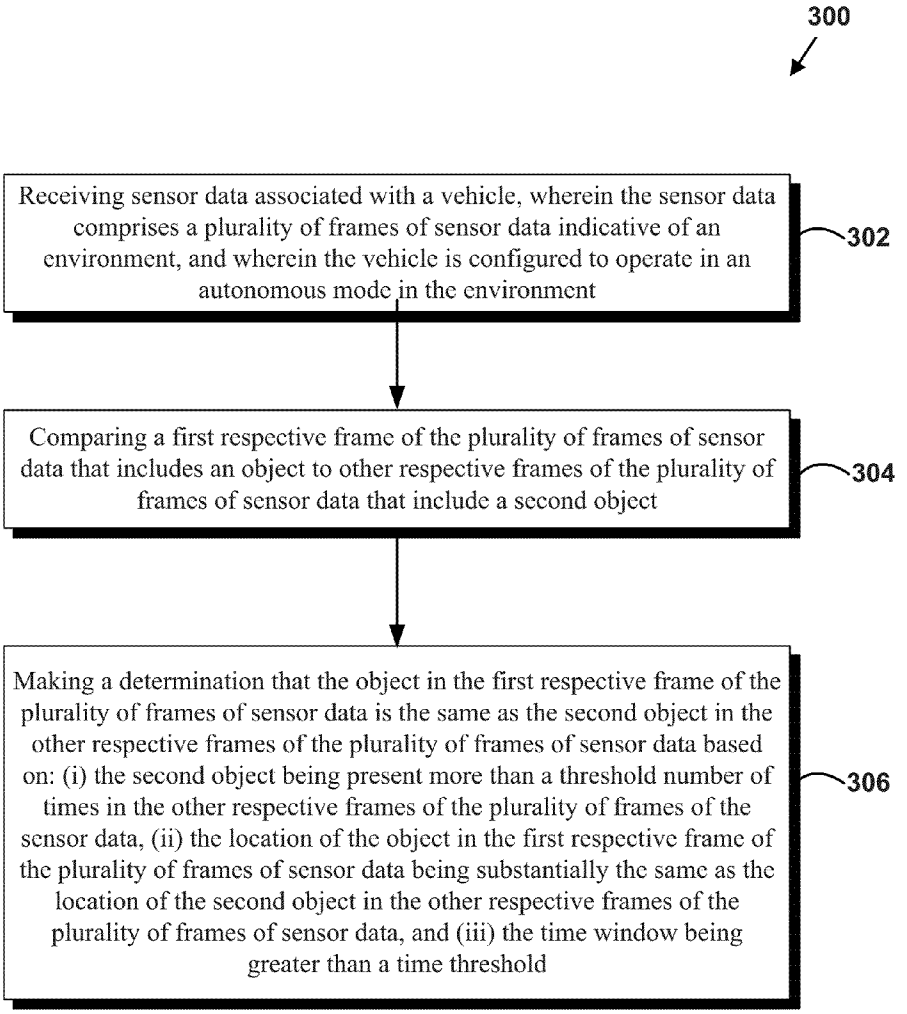
300
Receiving sensor data associated with a vehicle, wherein the sensor data comprises a plurality of frames of sensor data indicative of an environment, and wherein the vehicle is configured to operate in an autonomous mode in the environment
302
Comparing a first respective frame of the plurality of frames of sensor data that includes an object to other respective frames of the plurality of frames of sensor data that include a second object
304
Making a determination that the object in the first respective frame of the plurality of frames of sensor data is the same as the second object in the other respective frames of the plurality of frames of sensor data based on: (i) the second object being present more than a threshold number of times in the other respective frames of the plurality of frames of the sensor data, (ii) the location of the object in the first respective frame of the plurality of frames of sensor data being substantially the same as the location of the second object in the other respective frames of the plurality of frames of sensor data, and (iii) the time window being greater than a time threshold
306

Fig. 3

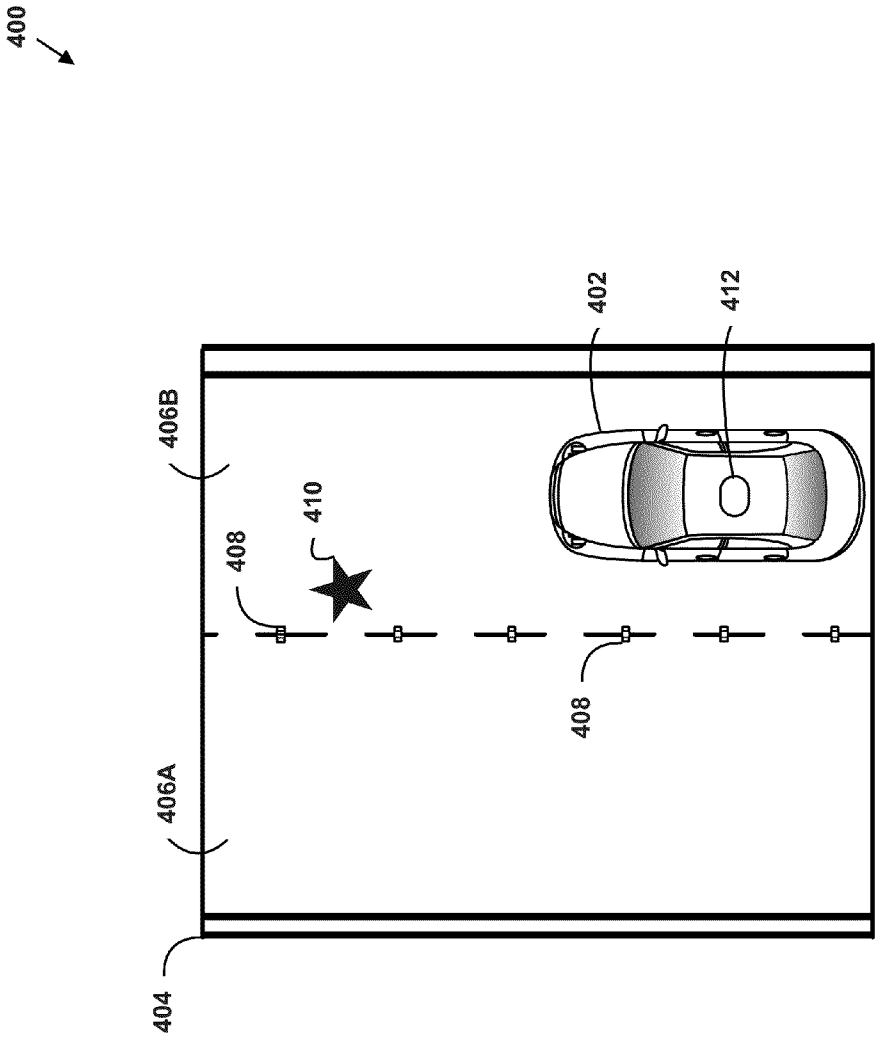

Fig. 4A

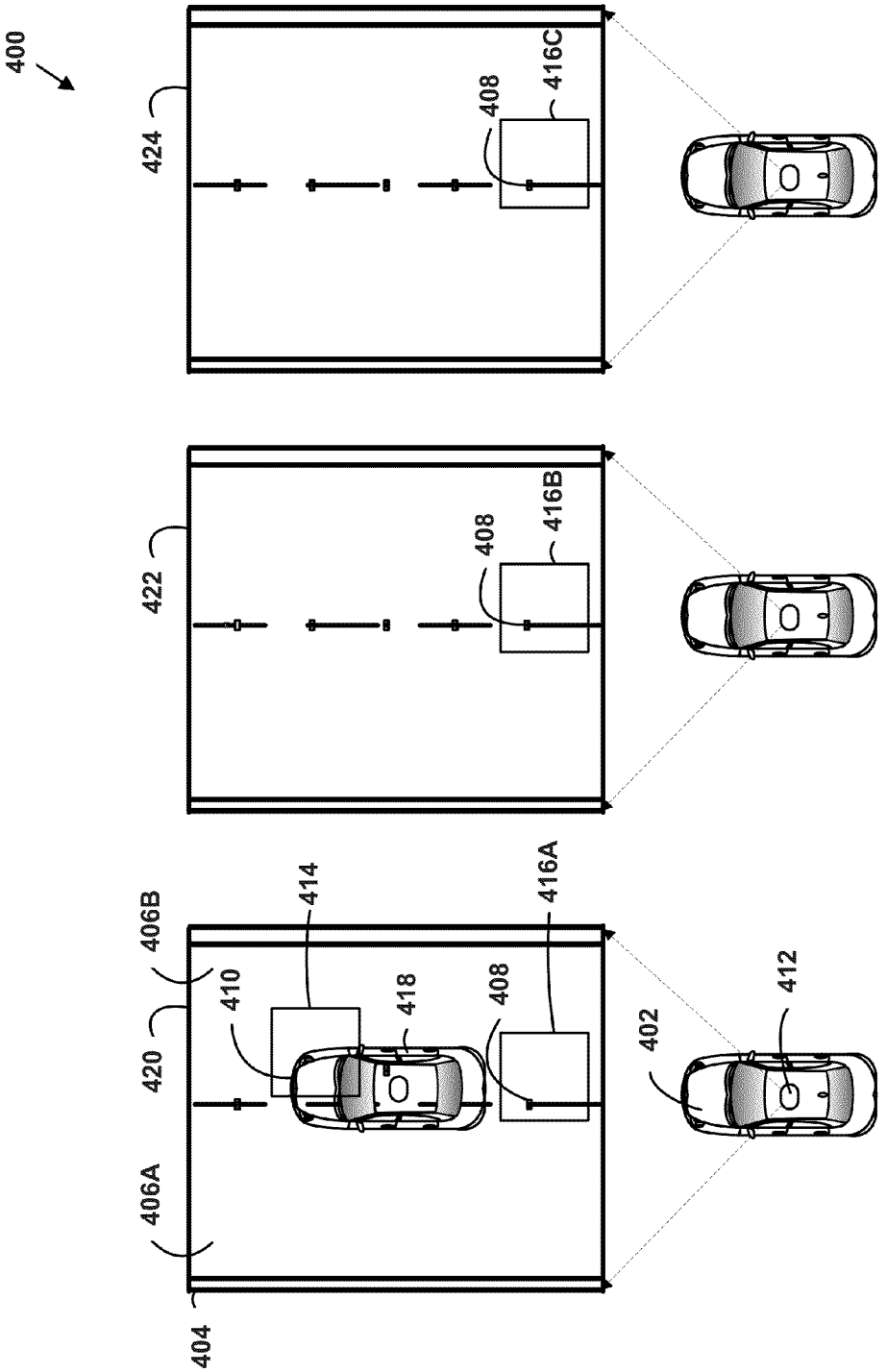
400
424
408
416C
422
408
416B
406B
414
416A
410
418
408
420
402
412
406A
404

Fig. 4B

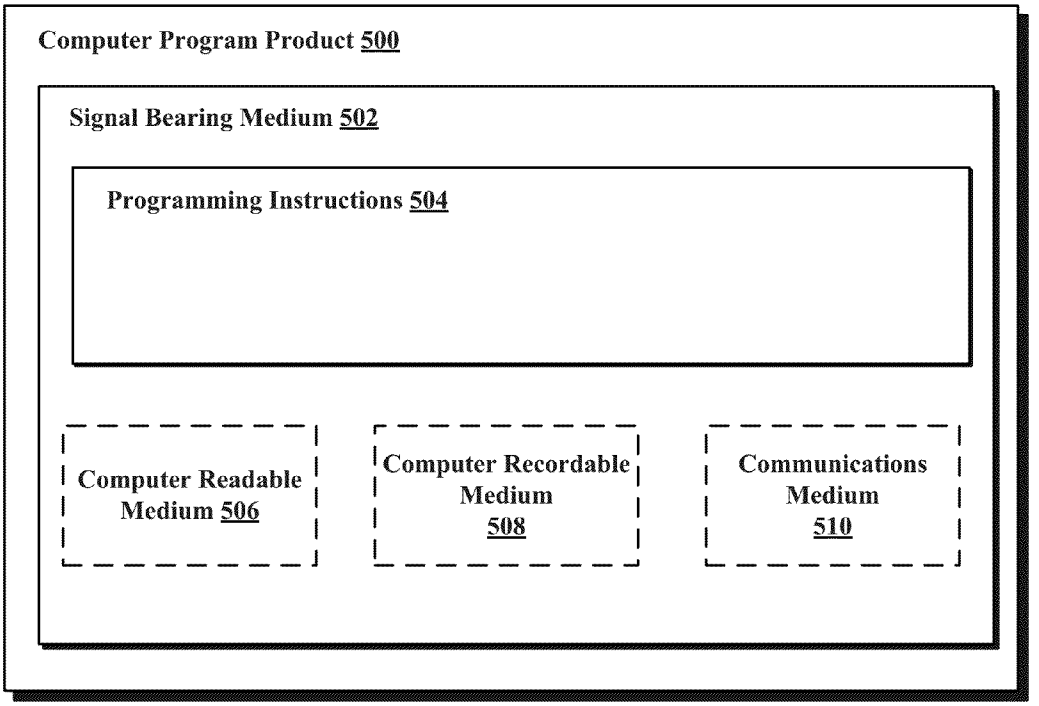
Computer Program Product 500
Signal Bearing Medium 502
Programming Instructions 504
Computer Readable Medium 506
Computer Recordable Medium 508
Communications Medium 510

Fig. 5

STATIC OBSTACLE DETECTION

BACKGROUND

Unless otherwise indicated herein, the materials described in this section are not prior art to the claims in this application and are not admitted to be prior art by inclusion in this section.

Vehicles can be configured to operate in an autonomous mode in which the vehicle navigates through an environment with little or no input from a driver. Such autonomous vehicles can include one or more sensors that are configured to detect information about the environment in which the vehicle operates. The vehicle and its associated computer-implemented controller use the detected information to navigate through the environment. For example, if the sensor(s) detect that the vehicle is approaching an obstacle, as determined by the computer-implemented controller, the controller adjusts the directional controls of the vehicle to cause the vehicle to navigate around the obstacle.

SUMMARY

For autonomous vehicles, tracking dynamic objects is a standard practice, but such practice my not be applied to distinguish between static and dynamic objects. Fusion based practices, which combine data over time, or a series of detentions may not effectively handle circumstances in which a dynamic obstacle first appears static and then subsequently moves. Beneficially, the methods and systems described herein may help an autonomous vehicle distinguish between static and dynamic objects.

In a first aspect, a method is provided. The method may include receiving sensor data associated with a vehicle. The sensor data may include a plurality of frames of sensor data indicative of an environment, and the vehicle may be configured to operate in an autonomous mode in the environment. The method may also include comparing, by a computing device, a first respective frame of the plurality of frames of sensor data that includes an object to other respective frames of the plurality of frames of sensor data that include a second object so as to determine: (i) whether a location of the object in the first respective frame of the plurality of frames of sensor data is substantially the same as a location of the second object in the other respective frames of the plurality of frames of sensor data, and (ii) a time window indicative of a time between collecting the first respective frame of the plurality of frames of sensor data that includes the object and collecting the other respective frames of the plurality of frames of sensor data that include the second object. The method may additionally include making a determination that the object in the first respective frame of the plurality of frames of sensor data is the same as the second object in the other respective frames of the plurality of frames of sensor data based on: (i) the second object being present more than a threshold number of times in the other respective frames of the plurality of frames of the sensor data, (ii) the location of the object in the first respective frame of the plurality of frames of sensor data being substantially the same as the location of the second object in the other respective frames of the plurality of frames of sensor data, and (iii) the time window being greater than a time threshold.

In a second aspect, a vehicle is provided. The vehicle may include a computer system. The computer system may be configured to receive sensor data associated with the vehicle. The sensor data may include a plurality of frames of sensor data indicative of an environment, and the vehicle may be configured to operate in an autonomous mode in the environment. The computer system may also be configured to compare a first respective frame of the plurality of frames of sensor data that includes an object to other respective frames of the plurality of frames of sensor data that include a second object so as to determine: (i) whether a location of the object in the first respective frame of the plurality of frames of sensor data is substantially the same as a location of the second object in the other respective frames of the plurality of frames of sensor data, and (ii) a time window indicative of a time between collecting the first respective frame of the plurality of frames of sensor data that includes the object and collecting the other respective frames of the plurality of frames of sensor data that include the second object. The computer system may additionally be configured to make a determination that the object in the first respective frame of the plurality of frames of sensor data is the same as the second object in the other respective frames of the plurality of frames of sensor data based on: (i) the second object being present more than a threshold number of times in the other respective frames of the plurality of frames of the sensor data, (ii) the location of the object in the first respective frame of the plurality of frames of sensor data being substantially the same as the location of the second object in the other respective frames of the plurality of frames of sensor data, and (iii) the time window being greater than a time threshold.

In a third aspect, a non-transitory computer readable medium having stored therein instructions that when executed by a computer system in a vehicle, cause the computer system to perform functions is disclosed. The functions may include receiving sensor data associated with the vehicle. The sensor data comprises a plurality of frames of sensor data indicative of an environment, and the vehicle is configured to operate in an autonomous mode in the environment. The functions may also include comparing a first respective frame of the plurality of frames of sensor data that includes an object to other respective frames of the plurality of frames of sensor data that include a second object so as to determine: (i) whether a location of the object in the first respective frame of the plurality of frames of sensor data is substantially the same as a location of the second object in the other respective frames of the plurality of frames of sensor data, and (ii) a time window indicative of a time between collecting the first respective frame of the plurality of frames of sensor data that includes the object and collecting the other respective frames of the plurality of frames of sensor data that include the second object. The object may include an object type, and the second object may include the same object type. The functions may additionally include making a determination that the object in the first respective frame of the plurality of frames of sensor data is the same as the second object in the other respective frames of the plurality of frames of sensor data based on: (i) the second object being present more than a threshold number of times in the other respective frames of the plurality of frames of the sensor data, (ii) the location of the object in the first respective frame of the plurality of frames of sensor data being substantially the same as the location of the second object in the other respective frames of the plurality of frames of sensor data, and (iii) the time window being greater than a time threshold.

In a fourth aspect a system is disclosed. The system may include a means for receiving sensor data associated with a vehicle. The sensor data may include a plurality of frames of sensor data indicative of an environment, and the vehicle may be configured to operate in an autonomous mode in the environment. The system may also include a means for comparing a first respective frame of the plurality of frames of sensor data that includes an object to other respective frames of the

plurality of frames of sensor data that include a second object so as to determine: (i) whether a location of the object in the first respective frame of the plurality of frames of sensor data is substantially the same as a location of the second object in the other respective frames of the plurality of frames of sensor data, and (ii) a time window indicative of a time between the first respective frame of the plurality of frames of sensor data that includes the object and the other respective frames of the plurality of frames of sensor data that include the second object. The system may additionally include a means for making a determination that the object in the first respective frame of the plurality of frames of sensor data is the same as the second object in the other respective frames of the plurality of frames of sensor data based on: (i) the second object being present more than a threshold number of times in the other respective frames of the plurality of frames of the sensor data, (ii) the location of the object in the first respective frame of the plurality of frames of sensor data being substantially the same as the location of the second object in the other respective frames of the plurality of frames of sensor data, and (iii) the time window being greater than a time threshold.

The foregoing summary is illustrative only and is not intended to be in any way limiting. In addition to the illustrative aspects, embodiments, and features described above, further aspects, embodiments, and features will become apparent by reference to the figures and the following detailed description.

BRIEF DESCRIPTION OF THE FIGURES

FIG. **1** illustrates a functional block diagram illustrating a vehicle, in accordance with an example embodiment.

FIG. **2** illustrates a vehicle, in accordance with an example embodiment.

FIG. **3** illustrates a block diagram of a method, in accordance with an example embodiment.

FIG. **4**A illustrates an operating environment, according to an example embodiment.

FIG. **4**B illustrates an operating scenario, according to an example embodiment.

FIG. **5** illustrates a schematic diagram of a computer program product, according to an example embodiment.

DETAILED DESCRIPTION

Example methods and systems are described herein. Any example embodiment or feature described herein is not necessarily to be construed as preferred or advantageous over other embodiments or features. The example embodiments described herein are not meant to be limiting. It will be readily understood that certain aspects of the disclosed systems and methods can be arranged and combined in a wide variety of different configurations, all of which are contemplated herein.

Furthermore, the particular arrangements shown in the Figures should not be viewed as limiting. It should be understood that other embodiments may include more or less of each element shown in a given Figure. Further, some of the illustrated elements may be combined or omitted. Yet further, an example embodiment may include elements that are not illustrated in the Figures.

For vehicles operating in an autonomous mode, knowing or recognizing the presence of objects in an environment of the vehicle may be helpful. For example, autonomous vehicles may need to quickly observe, perceive, and understand static obstacles in their environment in order to properly react to their presence. In some circumstances, the presence of an object in an environment may have an implied semantic meaning (e.g., lane markers, retro-reflectors, or construction cones may all specify lane boundaries) so false positive detections may cause improper reactions or decisions to be made by the autonomous vehicle; thus the reduction or elimination of false positive detection may improve performance of the autonomous vehicle. One common source of false positives includes dynamic obstacles, which may, in a single sensor frame, appear to be a certain static obstacle, but in reality may not be.

While autonomous vehicles generally may have the capability to follow dynamic objects over time based on outputs from sensors, autonomous vehicles may not apply such capabilities to distinguish between static and dynamic objects. Some autonomous vehicles may employ systems and methods that may allow the autonomous vehicle to discriminate between a specific class of objects that the autonomous vehicle is interested in and other classes of static and dynamic objects. However, such systems and methods may require more complex detectors in order to properly distinguish between the static and dynamic objects in the same class (e.g., a piece of a car and a construction cone). Additionally, the generally known data fusion based approaches, which either combine (i) raw data over time or (ii) a series of detections (each from a small time slice) over time, may improve the accuracy of static obstacle classification, but may not accurately handle circumstances in which a dynamic obstacle first appears as a static obstacle and then becomes dynamic or moves over time.

Disclosed embodiments relate to an autonomous vehicle that may, given a pre-existing detector for a class of static obstacles or objects (e.g. lane markings, retro-reflectors, or construction cones), apply the detector to individual frames of sensor data. When a possible object is detected in a single frame, the location of the object and time of observation of the object is compared to previous observations. The autonomous vehicle may determine a detection to be valid when the same object is observed some number of times, in the approximately same location, and within a predetermined window of time. In this example, a single false detection of a moving obstacle may not appear multiple times in the same place, and false positive detections from dynamic obstacles can be reduced.

Utilizing the methods and systems described herein may facilitate the task of image processing in an autonomous vehicle. By taking advantage of the fact that objects an autonomous vehicle may desire to detect are static, false positives from dynamic obstacles may be more easily eliminated and possibly without having to construct or extract discriminating features. This may allow detectors in an autonomous vehicle to be simpler to design and implement and be less computationally intensive, while still reducing the number of false positive detections.

Example systems will now be described in greater detail. Generally, an example system may be implemented in or may take the form of a computing device. However, an example system may also be implemented in or take the form of other devices or may be included within vehicles, such as cars, trucks, motorcycles, buses, boats, airplanes, helicopters, lawn mowers, recreational vehicles, amusement park vehicles, farm equipment, construction equipment, trams, golf carts, trains, and trolleys. Other vehicles are possible as well.

FIG. **1** is a functional block diagram depicting a vehicle **100** according to an example embodiment. The vehicle **100** is configured to operate fully or partially in an autonomous mode, and thus may be referred to as an "autonomous vehicle." For example, a computer system **112** may control

the vehicle **100** while in an autonomous mode via control instructions to a control system **106** for the vehicle **100**. The computer system **112** may receive information from a sensor system **104**, and base one or more control processes (such as the setting a heading so as to avoid a detected obstacle) upon the received information in an automated fashion.

The vehicle **100** may be fully autonomous or partially autonomous. In a partially autonomous vehicle some functions can optionally be manually controlled (e.g., by a driver) some or all of the time. Further, a partially autonomous vehicle may be configured to switch between a fully-manual operation mode and a partially-autonomous and/or a fully-autonomous operation mode.

The vehicle **100** may include various subsystems such as a propulsion system **102**, a sensor system **104**, a control system **106**, one or more peripherals **108**, as well as a power supply **110**, a computer system **112**, and a user interface **116**. The vehicle **100** may include more or fewer subsystems and each subsystem may include multiple elements. Further, each of the subsystems and elements of vehicle **100** may be interconnected. Thus, one or more of the described functions of the vehicle **100** may be divided up into additional functional or physical components, or combined into fewer functional or physical components. In some further examples, additional functional and/or physical components may be added to the examples illustrated by FIG. **1**.

The propulsion system **102** may include components operable to provide powered motion to the vehicle **100**. Depending upon the embodiment, the propulsion system **102** may include an engine/motor **118**, an energy source **119**, a transmission **120**, and wheels/tires **121**. The engine/motor **118** could be any combination of an internal combustion engine, an electric motor, steam engine, Stirling engine, or other types of engines and/or motors. In some embodiments, the propulsion system **102** may include multiple types of engines and/or motors. For instance, a gas-electric hybrid vehicle may include a gasoline engine and an electric motor. Other examples are possible as well.

The energy source **119** may represent a source of energy that may, in full or in part, power the engine/motor **118**. That is, the engine/motor **118** may be configured to convert the energy source **119** into mechanical energy to operate the transmission **120**. Examples of energy sources **119** may include gasoline, diesel, other petroleum-based fuels, propane, other compressed gas-based fuels, ethanol, solar panels, batteries, capacitors, flywheels, regenerative braking systems, and/or other sources of electrical power, etc. The energy source **119** may also provide energy for other systems of the automobile **100**.

The transmission **120** may include elements that are operable to transmit mechanical power from the engine/motor **118** to the wheels/tires **121**. Such elements may include a gearbox, a clutch, a differential, a drive shaft, and/or axle(s), etc. The transmission **120** may include other elements as well. The drive shafts may include one or more axles that may be coupled to the one or more wheels/tires **121**.

The wheels/tires **121** may be arranged to stably support the vehicle **100** while providing frictional traction with a surface, such as a road, upon which the vehicle **100** moves. Accordingly, the wheels/tires **121** of vehicle **100** may be configured in various formats, including a unicycle, bicycle/motorcycle, tricycle, or car/truck four-wheel format. Other wheel/tire geometries are possible, such as those including six or more wheels. Any combination of the wheels/tires **121** of vehicle **100** may be operable to rotate differentially with respect to other wheels/tires **121**. The wheels/tires **121** may represent at least one wheel that is fixedly attached to the transmission **120** and at least one tire coupled to a rim of the wheel that could make contact with the driving surface. The wheels/tires **121** may include any combination of metal and rubber, or another combination of materials.

The sensor system **104** generally includes one or more sensors configured to detect information about the environment surrounding the vehicle **100**. For example, the sensor system **104** may include a Global Positioning System (GPS) **122**, an inertial measurement unit (IMU) **124**, a RADAR unit **126**, a laser rangefinder/LIDAR unit **128**, a camera **130**, and/or a microphone **131**. The sensor system **104** may also include sensors configured to monitor internal systems of the vehicle **100** (e.g., O_2 monitor, fuel gauge, engine oil temperature, wheel speed sensors, etc.). One or more of the sensors included in the sensor system **104** may be configured to be actuated separately and/or collectively in order to modify a position and/or an orientation of the one or more sensors.

The GPS **122** may be any sensor configured to estimate a geographic location of the vehicle **100**. To this end, GPS **122** may include a transceiver operable to provide information regarding the position of the vehicle **100** with respect to the Earth.

The IMU **124** may include any combination of sensors (e.g., accelerometers and gyroscopes) configured to sense position and orientation changes of the vehicle **100** based on inertial acceleration.

The RADAR unit **126** may represent a system that utilizes radio signals to sense objects within the local environment of the vehicle **100**. In some embodiments, in addition to sensing the objects, the RADAR unit **126** may additionally be configured to sense the speed and/or heading of the objects.

Similarly, the laser rangefinder or LIDAR unit **128** may be any sensor configured to sense objects in the environment in which the vehicle **100** is located using lasers. Depending upon the embodiment, the laser rangefinder/LIDAR unit **128** could include one or more laser sources, a laser scanner, and one or more detectors, among other system components. The laser rangefinder/LIDAR unit **128** could be configured to operate in a coherent (e.g., using heterodyne detection) or an incoherent detection mode.

The camera **130** may include one or more devices configured to capture a plurality of images of the environment surrounding the vehicle **100**. The camera **130** may be a still camera or a video camera. In some embodiments, the camera **130** may be mechanically movable such as by rotating and/or tilting a platform to which the camera is mounted. As such, a control process of the vehicle **100** may be implemented to control the movement of the camera **130**.

The sensor system **104** may also include a microphone **131**. The microphone **131** may be configured to capture sound from the environment surrounding the vehicle **100**. In some cases, multiple microphones can be arranged as a microphone array, or possibly as multiple microphone arrays.

The control system **106** may be configured to control operation(s) of the vehicle **100** and its components. Accordingly, the control system **106** may include various elements include steering unit **132**, throttle **134**, brake unit **136**, a sensor fusion algorithm **138**, a computer vision system **140**, a navigation/pathing system **142**, and an obstacle avoidance system **144**, etc.

The steering unit **132** may represent any combination of mechanisms that may be operable to adjust the heading of vehicle **100**. For example, the steering unit **132** can adjust the axis (or axes) of one or more of the wheels/tires **121** so as to effect turning of the vehicle **100**. The throttle **134** may be configured to control, for instance, the operating speed of the engine/motor **118** and, in turn, control the speed of the vehicle

100. The brake unit **136** may include any combination of mechanisms configured to decelerate the vehicle **100**. The brake unit **136** may, for example, use friction to slow the wheels/tires **121**. In other embodiments, the brake unit **136** inductively decelerates the wheels/tires **121** by a regenerative braking process to convert kinetic energy of the wheels/tires **121** to electric current. The brake unit **136** may take other forms as well.

The sensor fusion algorithm **138** may be an algorithm (or a computer program product storing an algorithm) configured to accept data from the sensor system **104** as an input. The data may include, for example, data representing information sensed at the sensors of the sensor system **104**. The sensor fusion algorithm **138** may include, for instance, a Kalman filter, Bayesian network, or other algorithm. The sensor fusion algorithm **138** may provide various assessments based on the data from sensor system **104**. Depending upon the embodiment, the assessments may include evaluations of individual objects and/or features in the environment of vehicle **100**, evaluations of particular situations, and/or evaluations of possible impacts based on the particular situation. Other assessments are possible.

The computer vision system **140** may be any system operable to process and analyze images captured by camera **130** in order to identify objects and/or features in the environment of vehicle **100** that could include traffic signals, road way boundaries, other vehicles, pedestrians, and/or obstacles, etc. The computer vision system **140** may use an object recognition algorithm, a Structure From Motion (SFM) algorithm, video tracking, and other computer vision techniques. In some embodiments, the computer vision system **140** could be additionally configured to map an environment, track objects, estimate the speed of objects, etc.

The navigation and pathing system **142** may be any system configured to determine a driving path for the vehicle **100**. For example, the navigation/pathing system **142** may determine a series of speeds and directional headings to effect movement of the vehicle **100** along a path that substantially avoids perceived obstacles while generally advancing the vehicle **100** along a roadway-based path leading to an ultimate destination, which may be set according to user inputs via the user interface **116**, for example. The navigation and pathing system **142** may additionally be configured to update the driving path dynamically while the vehicle **100** is in operation. In some embodiments, the navigation and pathing system **142** could be configured to incorporate data from the sensor fusion algorithm **138**, the GPS **122**, and one or more predetermined maps so as to determine the driving path for vehicle **100**.

The obstacle avoidance system **144** may represent a control system configured to identify, evaluate, and avoid or otherwise negotiate potential obstacles in the environment of the vehicle **100**. For example, the obstacle avoidance system **144** may effect changes in the navigation of the vehicle **100** by operating one or more subsystems in the control system **106** to undertake swerving maneuvers, turning maneuvers, braking maneuvers, etc. In some embodiments, the obstacle avoidance system **144** is configured to automatically determine feasible ("available") obstacle avoidance maneuvers on the basis of surrounding traffic patterns, road conditions, etc. For example, the obstacle avoidance system **144** may be configured such that a swerving maneuver is not undertaken when other sensor systems detect vehicles, construction barriers, other obstacles, etc. in the region adjacent the vehicle **100** that would be swerved into. In some embodiments, the obstacle avoidance system **144** may automatically select the maneuver that is both available and maximizes safety of occupants of the vehicle. For example, the obstacle avoidance system **144** may select an avoidance maneuver predicted to cause the least amount of acceleration in a passenger cabin of the vehicle **100**.

The control system **106** may additionally or alternatively include components other than those shown and described.

The vehicle **100** also includes peripherals **108** configured to allow interaction between the vehicle **100** and external sensors, other vehicles, other computer systems, and/or a user, such as an occupant of the vehicle **100**. For example, the peripherals **108** for receiving information from occupants, external systems, etc. may include a wireless communication system **146**, a touchscreen **148**, a microphone **150**, and/or a speaker **152**.

In some embodiments, the peripherals **108** function to receive inputs for a user of the vehicle **100** to interact with the user interface **116**. To this end, the touchscreen **148** can both provide information to a user of the vehicle **100**, and convey information from the user indicated via the touchscreen **148** to the user interface **116**. The touchscreen **148** can be configured to sense both touch positions and touch gestures from the finger of a user (or stylus, etc.) via capacitive sensing, resistance sensing, optical sensing, a surface acoustic wave process, etc. The touchscreen **148** can be capable of sensing finger movement in a direction parallel or planar to the touchscreen surface, in a direction normal to the touchscreen surface, or both, and may also be capable of sensing a level of pressure applied to the touchscreen surface. An occupant of the vehicle **100** can also utilize a voice command interface. For example, the microphone **150** can be configured to receive audio (e.g., a voice command or other audio input) from an occupant of the vehicle **100**. Similarly, the speaker **152** can be configured to output audio to the occupant of the vehicle **100**.

In some embodiments, the peripherals **108** function to allow communication between the vehicle **100** and external systems, such as devices, sensors, other vehicles, etc. within its surrounding environment and/or controllers, servers, etc., physically located far from the vehicle **100** that provide useful information regarding the vehicle's surroundings, such as traffic information, weather information, etc. For example, the wireless communication system **146** can wirelessly communicate with one or more devices directly or via a communication network. The wireless communication system **146** can optionally use 3G cellular communication, such as CDMA, EVDO, GSM/GPRS, and/or 4G cellular communication, such as WiMAX or LTE. Additionally or alternatively, the wireless communication system **146** can communicate with a wireless local area network (WLAN), for example, using WiFi. In some embodiments, the wireless communication system **146** could communicate directly with a device, for example, using an infrared link, Bluetooth, and/or ZigBee. The wireless communication system **146** can include one or more dedicated short range communication (DSRC) devices that can include public and/or private data communications between vehicles and/or roadside stations. Other wireless protocols for sending and receiving information embedded in signals, such as various vehicular communication systems, can also be employed by the wireless communication system **146** within the context of the present disclosure.

The power supply **110** may provide power to components of the vehicle **100**, such as electronics in the peripherals **108**, the computer system **112**, the sensor system **104**, etc. The power supply **110** can include a rechargeable lithium-ion or lead-acid battery for storing and discharging electrical energy to the various powered components, for example. In some

embodiments, one or more banks of batteries may be configured to provide electrical power. In some embodiments, the power supply **110** and the energy source **119** can be implemented together, as in some all-electric cars.

Many or all of the functions of the vehicle **100** may be controlled via the computer system **112** that receives inputs from the sensor system **104**, the peripherals **108**, etc., and communicates appropriate control signals to the propulsion system **102**, the control system **106**, the peripherals **108**, etc. to effect automatic operation of the vehicle **100** based on its surroundings. The computer system **112** may include at least one processor **113** (which could include at least one microprocessor) that executes instructions **115** stored in a non-transitory computer readable medium, such as the data storage **114**. The computer system **112** may also represent a plurality of computing devices that may serve to control individual components or subsystems of the vehicle **100** in a distributed fashion.

In some embodiments, data storage **114** may contain instructions **115** (e.g., program logic) executable by the processor **113** to execute various automobile functions, including those described above in connection with FIG. **1**. Data storage **114** may contain additional instructions as well, including instructions to transmit data to, receive data from, interact with, and/or control one or more of the propulsion system **102**, the sensor system **104**, the control system **106**, and the peripherals **108**.

In addition to the instructions **115**, the data storage **114** may store data such as roadway maps, path information, among other information. Such information may be used by vehicle **100** and computer system **112** at during the operation of the vehicle **100** in the autonomous, semi-autonomous, and/or manual modes.

The vehicle **100**, and associated computer system **112**, provides information to and/or receives input from, a user of the vehicle **100**, such as an occupant in a passenger cabin of the vehicle **100**. Accordingly, the vehicle **100** may include a user interface **116** for providing information to or receiving input from a user of vehicle **100**. The user interface **116** may control or enable control of content and/or the layout of interactive images that could be displayed on the touchscreen **148**. Further, the user interface **116** could include one or more input/output devices within the set of peripherals **108**, such as the wireless communication system **146**, the touchscreen **148**, the microphone **150**, and the speaker **152**.

The computer system **112** controls the operation of the vehicle **100** based on inputs received from various subsystems indicating vehicle and/or environmental conditions (e.g., propulsion system **102**, sensor system **104**, and/or control system **106**), as well as inputs from the user interface **116**, indicating user preferences. For example, the computer system **112** may utilize input from the control system **106** to control the steering unit **132** to avoid an obstacle detected by the sensor system **104** and the obstacle avoidance system **144**. The computer system **112** may be configured to control many aspects of the vehicle **100** and its subsystems. Generally, however, provisions are made for manually overriding automated controller-driven operation, such as in the event of an emergency, or merely in response to a user-activated override, etc.

The components of the vehicle **100** described herein may be configured to work in an interconnected fashion with other components within or outside their respective systems. For example, the camera **130** can capture a plurality of images that represent information about an environment of the vehicle **100** while operating in an autonomous mode. The environment may include other vehicles, traffic lights, traffic signs, road markers, pedestrians, etc. The computer vision system **140** can categorize and/or recognize various aspects in the environment in concert with the sensor fusion algorithm **138**, the computer system **112**, etc. based on object recognition models pre-stored in the data storage **114**, and/or by other techniques.

Although FIG. **1** shows various components of vehicle **100**, i.e., wireless communication system **146**, computer system **112**, data storage **114**, and user interface **116**, as being integrated into the vehicle **100**, one or more of these components could be mounted or associated separately from the vehicle **100**. For example, data storage **114** could, in part or in full, exist separate from the vehicle **100**. Thus, the vehicle **100** could be provided in the form of device elements that may be located separately or together. The device elements that make up vehicle **100** may generally be communicatively coupled together in a wired and/or wireless fashion.

FIG. **2** depicts an example vehicle **200** that can include all or most of the functions described in connection with the vehicle **100** in reference to FIG. **1**. Although example vehicle **200** is illustrated in FIG. **2** as a four-wheel sedan-type car for illustrative purposes, the present disclosure is not so limited. For instance, example vehicle **200** can represent any type of vehicle mentioned herein.

Example vehicle **200** includes a sensor unit **202**, a wireless communication system **204**, a LIDAR unit **206**, a laser rangefinder unit **208**, and a camera **210**. Furthermore, example vehicle **200** may include any of the components described in connection with vehicle **100** of FIG. **1**.

The sensor unit **202** is mounted atop example vehicle **200** and includes one or more sensors configured to detect information about an environment surrounding example vehicle **200**, and output indications of the information. For example, the sensor unit **202** may include any combination of cameras, RADARs, LIDARs, range finders, and acoustic sensors. The sensor unit **202** may include one or more movable mounts that may be operable to adjust the orientation of one or more sensors in the sensor unit **202**. In one embodiment, the movable mount may include a rotating platform that may scan sensors so as to obtain information from each direction around example vehicle **200**. In another embodiment, the movable mount of the sensor unit **202** may be moveable in a scanning fashion within a particular range of angles and/or azimuths. The sensor unit **202** may be mounted atop the roof of a car, for instance, however other mounting locations are possible. Additionally, the sensors of the sensor unit **202** may be distributed in different locations and need not be collocated in a single location. Some possible sensor types and mounting locations include the LIDAR unit **206** and laser rangefinder unit **208**. Furthermore, each sensor of the sensor unit **202** may be configured to be moved or scanned independently of other sensors of the sensor unit **202**.

The wireless communication system **204** may be located on a roof of example vehicle **200** as depicted in FIG. **2**. Alternatively, the wireless communication system **204** may be located, fully or in part, elsewhere. The wireless communication system **204** may include wireless transmitters and receivers that may be configured to communicate with devices external or internal to example vehicle **200**. Specifically, the wireless communication system **204** may include transceivers configured to communicate with other vehicles and/or computing devices, for instance, in a vehicular communication system or a roadway station. Examples of such vehicular communication systems include dedicated short range communications (DSRC), radio frequency identification (RFID), and other proposed communication standards directed towards intelligent transport systems.

The camera **210** may be a photo-sensitive instrument, such as a still camera, a video camera, etc., that is configured to capture a plurality of images of the environment of example vehicle **200**. To this end, the camera **210** can be configured to detect visible light, and can additionally or alternatively be configured to detect light from other portions of the spectrum, such as infrared or ultraviolet light. The camera **210** can be a two-dimensional detector, and can optionally have a three-dimensional spatial range of sensitivity. In some embodiments, the camera **210** can include, for example, a range detector configured to generate a two-dimensional image indicating distance from the camera **210** to a number of points in the environment. To this end, the camera **210** may use one or more range detecting techniques.

For example, the camera **210** may provide range information by using a structured light technique in which example vehicle **200** illuminates an object in the environment with a predetermined light pattern, such as a grid or checkerboard pattern and uses the camera **210** to detect a reflection of the predetermined light pattern from environmental surroundings. Based on distortions in the reflected light pattern, example vehicle **200** may determine the distance to the points on the object. The predetermined light pattern may comprise infrared light, or radiation at other suitable wavelengths for such measurements.

The camera **210** may be mounted inside a front windshield of example vehicle **200**. Specifically, the camera **210** may be situated to capture images from a forward-looking view with respect to the orientation of example vehicle **200**. Other mounting locations and viewing angles of the camera **210** may also be used, either inside or outside example vehicle **200**.

The camera **210** can have associated optics operable to provide an adjustable field of view. Further, the camera **210** may be mounted to example vehicle **200** with a movable mount to vary a pointing angle of the camera **210**, such as a via a pan/tilt mechanism.

In FIG. **3**, a method **300** is provided that may accurately and efficiently detect static obstacles, in accordance with an example embodiment. The vehicle described in this method may be vehicle **100** and/or vehicle **200** as illustrated and described in reference to FIGS. **1** and **2**, respectively, or components of the vehicle **100** or vehicle **200**. For example, the processes described herein may be carried out by RADAR unit **126**, LIDAR unit **128**, and/or camera **130** mounted to an autonomous vehicle (e.g., vehicle **200**) in communication with computer system **112**, sensor fusion algorithm **138**, and/or computer vision system **140**.

Furthermore, it is noted that the functionality described in connection with the flowcharts described herein can be implemented as special-function and/or configured general-function hardware modules, portions of program code executed by a processor (e.g., the processor **113** in computer system **112**) for achieving specific logical functions, determinations, and/or steps described in connection with the flowchart shown in FIG. **3**. Where used, program code can be stored on any type of computer-readable medium (e.g., computer-readable storage medium or non-transitory media, such as the data storage **114** described above with respect to computer system **112** and/or a computer program product **500** described below), for example, such as a storage device including a disk or hard drive.

In addition, each block of the flowchart shown in FIG. **3** may represent circuitry that is wired to perform the specific logical functions in the process. Unless specifically indicated, functions in the flowchart shown in FIG. **3** may be executed out of order from that shown or discussed, including substantially concurrent execution of separately described functions, or even in reverse order in some examples, depending on the functionality involved, so long as the overall functionality of the described method is maintained.

Initially, at block **302**, method **300** of FIG. **3** includes receiving sensor data associated with a vehicle. The sensor data may include a plurality of frames of sensor data indicative of the environment in which the vehicle is operating. As previously noted, the vehicle may be the vehicle described in reference to FIGS. **1** and **2** and may be configured to operate in an autonomous mode in the environment.

The environment may be any environment in which the vehicle may be operating autonomously such as environment **400** of FIG. **4**A. As shown in FIG. **4**A, vehicle **402** may be operating in an environment **400** that includes vehicle **402**, a two-lane highway **404** with lanes of travel **406**A, **406**B, a plurality of lane markers **408**, and an undetermined object **410** that is substantially located within lane of travel **406**B of the highway **404**. Note, within the context of this disclosure substantially may include being exact and/or being one or more deviations from exact. Accordingly, in some examples unknown object **410** may be located completely within lane of travel **406**B and in others partially located within lane of travel **406**B. For instance unknown object **410** may be located within 1 foot, 2 feet, or a range of 3-5 feet in the lane. In other instances, the unknown object may be positioned such that it is overlaying the lane, on the curb, or in the shoulder area of highway **404**, etc. Vehicle **402** may operate in other environments similar to environment **400** as well.

The sensor data may include any data indicative of environment **400**. The sensor data may encompass various types of data, may be of various file formats, and may be stored to various mediums, whether those types of data, file formats, and mediums are known or have yet to be developed. For example, the sensor data may include one or more digital photographs or one or more digital graphics that may represent environment **400**.

The sensor data may also include a plurality of frames of sensor data that is indicative of the environment (e.g., shown as **420**, **422**, **424** in FIG. **4**B). Taken together, the plurality of frames of data may be indicative of a time period during which the sensor data was acquired or a range within which sensor data was acquired within the environment. For instance, the plurality of frames of sensor data may include sensor data that may be obtained at different times during a particular day in environment **400**, and may include a combination of data collected by sensors of the vehicle **402** (such as any types of data described as being collected by sensors of the vehicle **100** in FIG. **1**, for example).

To obtain the plurality of frames of sensor data, vehicle **402** may be continuously scanning environment **400** as the vehicle **402** operates. The vehicle may utilize a large number of scans of the environment or periodic scans of the environment using various sensors when obtaining the sensor data. Successive scans may be multiple scans by various sensors occurring over time and may be continuous or may occur in intervals. For example, the sensor data obtained in environment **400** may be obtained using sensor system **412** utilizing successive scans every few milliseconds as vehicle **402** operates in environment **400** during the particular day. Other timing may be used as well.

In other examples, the vehicle may utilize a more directed approach to obtain the sensor data. For instance, the vehicle may determine a location of interest and obtain the data based on the determined location of interest. Referring again to FIG. **4**A, vehicle **402** may determine a location of interest to be a particular portion of the highway **404**, such as lane of travel

406*b*. Knowing where lane of travel **406***b* is on highway **404** and where lane of travel **406***b* is in relation to itself, vehicle **402** may utilize such information and cause the sensors of sensor system **412** to obtain data only from the particular lane, lane **406***b*. For instance, vehicle **402** may determine or receive information indicating that lane of travel **406***b* may become obstructed within the next 2 feet by unknown object **410**. Accordingly, vehicle **400** may determine the location of interest to be directly in front of vehicle **400** within a range of 2 feet. Vehicle **402** may then operate its one or more sensors of sensor system **412** in the manner noted above to obtain relevant sensor data.

In other examples, some or all of the plurality of frames of sensor data may be received by the vehicle, such as from another vehicle that may be operating in the environment (not shown in FIG. **4**A). The received sensor data may include all of the frames of sensor data obtained by the vehicle or alternatively, may only include some of the frames of sensor data the vehicle may obtain. In circumstances when only part of the sensor data is received, vehicle **402** may then combine the received data with data it obtained using its sensor system **412**.

Referring to FIG. **4**B, illustrated is an operating scenario, according to an example embodiment. In the scenario, vehicle **402** may determine that it wants to prepare to change lanes from lane of travel **406***b* to lane of travel **406***a* and, in so doing, may determine that the lane markers **408** that divide the lanes **406***a*, **406***b* are important. Accordingly, using a retro-reflector detector or sensor of sensor system **412** that is configured to detect lane markers, vehicle **402** may sense highway **404** of environment **400** to detect any present lane markers. In the example shown in FIG. **4**B, vehicle **402** may first detect potential lane marker objects in areas **414** and **416**A, and as vehicle **402** continues to operate **402**, vehicle **402** may continue to obtain relevant sensor data. In sum, vehicle **402** may obtain three frames of sensor data: **420**, **422**, **424** that each may include detections of a potential lane marker. Potential lane marker **408** may have been detected in area **416**A, **416**B, and **416**C in frames of sensor data **420**, **422**, and **424**, respectively. And potential lane marker **410** may have been detected in area **414** in frame of sensor data **420**. Accordingly, after obtaining the relevant sensor data, vehicle **402** may have detected unknown object **410** of FIG. **4**A to be a potential lane marker **410** of FIG. **4**B.

Note, in FIG. **4**B the sensor data includes the image shown above the dotted arrows and does not include vehicle **402**. Vehicle **402** is shown for explanation purposes only and is not intended to be part of the sensor data. In practice, the sensor data may be obtained in front of, behind, or any degree in-between, from the vehicle **402** and thus may not include data representing the vehicle itself. However, in some examples, a portion of vehicle **402** may be included in the sensor data.

At block **304**, method **300** includes comparing a first respective frame of the plurality of frames of sensor data that includes an object to other respective frames of the plurality of frames of sensor data that include a second object. The objects may be any object located in the environment of the vehicle. In the scenario illustrated in FIG. **4**B, because vehicle **402** is operating a sensor configured to detect lane markers, the object may be lane markers **408** or unknown object **410**, for example.

The comparison may be made, for example, using a computer system similar to or the same as computer system **112** as described in FIG. **1**. In general, the comparison may be made employing any data processing methods or systems that are now known or may be later developed. For example, in some comparisons, spatial data structures, such as a two-dimensional (2D) occupancy grids, may be employed to speed up the matching of new objects with prior observations.

Referring again to the scenario shown in FIG. **4**B, vehicle **402** may compare each frame of sensor data **420**, **422**, **424**—all of which have at least one potential detection of an object (the lane marker)—to one another to determine similarities between the frames of data.

Based on the comparison, the vehicle may, for example, determine whether a location of the object in the first respective frame of the sensor data is substantially the same as a location of the second object in the other respective frames of sensor data. The vehicle may also determine a time window indicative of a time between the first respective frame of the plurality of frames of sensor data that includes the object and the other respective frames of the plurality of frames of sensor data that include the second object.

Accordingly, and again referring to the scenario illustrated in FIG. **4**B for example, vehicle **402** may determine whether the potential lane marker **408** detected in area **416**A and potential lane marker **410** of area **414** of sensor data **420**, is in substantially the same location as potential lane marker **408** detected in area **416**B in sensor data **424** and in substantially the same location as potential lane marker **408** detected in areas **416**C in sensor data **426**. Additionally, vehicle **402** may determine that frames of sensor data **420**, **422** and **424** was obtained within a time window of 2 milliseconds.

Once the respective frames of sensor data have been compared, method **300**, at block **306**, includes making a determination that the first object in the first frame of the plurality of frames of sensor data is the same as the second object in the other respective frames of sensor data. The vehicle may make the determination based on the second object being detected more than a threshold number of times in the other respective frames of the plurality of frames of sensor data; the location of the object in the first respective frame of the plurality of frames of the sensor data being substantially the same as the location of the second object in the other respective frames of the plurality of frames of sensor data; and the time window being greater than a time threshold. Similar to the comparison performed at block **304**, the determinations made at block **306** may be performed using a computer system the same as or similar to that of computer system **112**.

The threshold number of detections and threshold time may be any pre-determined threshold that may serve to facilitate the accurately detecting the object. The thresholds may be determined based on prior detections or operations in similar environments. For example, in the scenario of FIG. **4**B, the threshold number of times may be 3 and the threshold time may be 2 milliseconds because in a similar operating scenario (not shown), vehicle **402** may have determined that lane markers tend to be detected three to five times within a few milliseconds before moving out of range for detection. However, 3 detections and 2 milliseconds is intended only to be an example and other thresholds may be used. For instances, in some embodiments a range of 1-2 seconds may be used as a time threshold and the threshold number of detections may be variable depending on the time threshold. For example, as the time threshold decreases, the threshold number of detections may decrease. Other thresholds may be used as well.

Making such determinations may allow vehicle **402** to determine whether the original detections in area **414** and area **416**A are valid or not. In other words, the determinations my allow vehicle **402** to determine whether a lane marker actually exists or whether the detection instead may represent

a dynamic object that the sensor system **412** of vehicle **402** initially detected as a lane marker but in truth is not actually a lane marker.

For example, again referring to the scenario depicted in FIG. **4**B, as noted above vehicle **402** may determine that it detected potential lane marker **408** in area **416**A, in area **416**B, and in area **416**C in sensor data **420**, **424**, and **426**, respectively within a time window of 2 milliseconds. Moreover, vehicle **402** may determine that lane marker **408** was detected substantially within the same location, and detected three times. Accordingly, because vehicle **402** detected lane marker **408** at least the threshold three times, detected lane marker **408** within substantially the same location in each of the three detections (**416**A, **416**B, **416**C), and detected lane marker **408** within the pre-determined time window, vehicle **402** may determine lane marker **406** is in fact a stationary lane marker.

Conversely, vehicle **402** may determine that unknown object and potential lane marker **410** detected in area **414** is not a stationary lane marker. Because vehicle **402** only detected unknown object and potential lane marker **410** in area **414** once, vehicle **402** may determine that, while the unknown object and potential lane marker **410** may have similar qualities and characteristics to be detected by the sensor, the actual detected object may be a dynamic object such as the headlight of another car **418** that may be operating within environment **400** along with vehicle **402**. As shown, vehicle **402** detected unknown object and potential lane marker **410** in frame **420**, however vehicle **402** did not detect unknown object and potential lane marker **410** in the remaining frames of sensor data **424**, **426** perhaps because vehicle **418** may have continued to operate and thus the headlight did not remain in the same position long enough to be detected multiple times. Thus, vehicle **402** may disregard such detection when making a determination regarding the boundaries of the lane, for example.

Using this information, an autonomous vehicle may receive instructions and be controlled to react as necessary to avoid the confirmed object. In accordance with the original objective of vehicle **402**, vehicle **402** may utilize the detection of the lane marker **408** to, for example, safely change lanes from **406***b* to **406***a*.

Example methods, such as method **300** of FIG. **3** may be carried out in whole or in part by the vehicle and its subsystems. Accordingly, example methods could be described by way of example herein as being implemented by the vehicle. However, it should be understood that an example method may be implemented in whole or in part by other computing devices. For example, an example method may be implemented in whole or in part by a server system, which receives data from a device such as those associated with the vehicle. Other examples of computing devices or combinations of computing devices that can implement an example method are possible.

In some embodiments, the techniques disclosed herein may be implemented as computer program instructions encoded on a non-transitory computer-readable storage media in a machine-readable format, or on other non-transitory media or articles of manufacture (e.g., the instructions **115** stored on the data storage **114** of the computer system **112** of the vehicle **100**). FIG. **5** is a schematic illustrating a conceptual partial view of an example computer program product that includes a computer program for executing a computer process on a computing device, arranged according to at least some embodiments presented herein.

In one embodiment, the example computer program product **500** is provided using a signal bearing medium **502**. The signal bearing medium **502** may include one or more programming instructions **504** that, when executed by one or more processors may provide functionality or portions of the functionality described herein. In some examples, the signal bearing medium **502** can be a non-transitory computer-readable medium **506**, such as, but not limited to, a hard disk drive, a Compact Disc (CD), a Digital Video Disk (DVD), a digital tape, memory, etc. In some implementations, the signal bearing medium **502** may encompass a computer recordable medium **508**, such as, but not limited to, memory, read/write (R/W) CDs, R/W DVDs, etc. In some implementations, the signal bearing medium **502** may encompass a communications medium **510**, such as, but not limited to, a digital and/or an analog communication medium (e.g., a fiber optic cable, a waveguide, a wired communications link, a wireless communication link, etc.). Thus, for example, the signal bearing medium **502** may be conveyed by a wireless form of the communications medium **510**.

The one or more programming instructions **504** may be, for example, computer executable and/or logic implemented instructions. In some examples, a computing device such as the computer system **112** of FIG. **1** may be configured to provide various operations, functions, or actions in response to the programming instructions **504** conveyed to the computer system **112** by one or more of the computer readable medium **506**, the computer recordable medium **508**, and/or the communications medium **510**.

The non-transitory computer readable medium could also be distributed among multiple data storage elements, which could be remotely located from each other. The computing device that executes some or all of the stored instructions could be a vehicle, such as the example vehicle **200** illustrated in FIG. **2**. Alternatively, the computing device that executes some or all of the stored instructions could be another computing device, such as a server.

The above detailed description describes various features and functions of the disclosed systems, devices, and methods with reference to the accompanying figures. While various aspects and embodiments have been disclosed herein, other aspects and embodiments are possible. The various aspects and embodiments disclosed herein are for purposes of illustration and are not intended to be limiting, with the true scope being indicated by the following claims.

We claim:

1. A method comprising:

receiving sensor data associated with a vehicle, wherein the sensor data comprises a plurality of frames of sensor data indicative of an environment, wherein the sensor data comprises sensor data from a sensor, and wherein the vehicle is configured to operate in an autonomous mode in the environment;

determining, by a computing device, that a first respective frame of the plurality of frames of sensor data indicates detection of an object in the environment;

identifying, from within the plurality of frames of sensor data, other respective frames that indicate detection of a second object in the environment;

comparing, by the computing device, the first respective frame of the plurality of frames of sensor data that indicates detection of the object in the environment to the other respective frames of the plurality of frames of sensor data that indicate detection of the second object in the environment;

based on the comparison, determining:

(i) whether a location of the object indicated by the first respective frame of the plurality of frames of sensor data is substantially the same as a location of the second

object indicated by the other respective frames of the plurality of frames of sensor data, and

(ii) a time window indicative of a time between collection of the first respective frame of the plurality of frames of sensor data that indicates detection of the object and collection of the other respective frames of the plurality of frames of sensor data that indicate detection of the second object;

based on prior detections of objects by the sensor, determining (i) an expected number of detections of the object by the sensor in response to the object being a stationary object in the environment and (ii) an expected amount of time between the expected number of detections;

making a determination that the object indicated by the first respective frame of the plurality of frames of sensor data is the same as the second object indicated by the other respective frames of the plurality of frames of sensor data based on:

(i) detection of the second object being indicated more than a threshold number of times in the other respective frames of the plurality of frames of the sensor data, wherein the threshold number of times is based on the expected number of detections,

(ii) the location of the object indicated by the first respective frame of the plurality of frames of sensor data being substantially the same as the location of the second object indicated by the other respective frames of the plurality of frames of sensor data, and

(iii) the time window being greater than a time threshold, wherein the time threshold is based on the expected amount of time; and

based on the determination, providing instructions to control the vehicle in the environment.

2. The method of claim **1**, further comprising:

making a second determination that the object indicated by the first respective frame of the plurality of frames of sensor data is different than the second object indicated by the other respective frames of the plurality of frames of sensor data based on:

(i) detection of the second object being indicated less than the threshold number of times in the other respective frames of the plurality of frames of the sensor data,

(ii) the location of the object indicated by the first respective frame of the plurality of frames of sensor data being substantially different than the location of the second object indicated by the other respective frames of the plurality of frames of sensor data, or

(iii) the time window being less than the time threshold.

3. The method of claim **2**, wherein providing the instructions to control the vehicle in the environment is based also on the second determination.

4. The method of claim **1**,

wherein the object is associated with a category of objects,

wherein the second object is associated with the category of objects, and

wherein the sensor is configured to detect objects in the category of objects.

5. The method of claim **4**, wherein the category of objects comprises a reflector.

6. The method of claim **1**, wherein the sensor data comprises sensor data received from a second vehicle operating in the environment.

7. A vehicle comprising:

a sensor; and

a computer system, wherein the computer system is configured to:

receive sensor data associated with the vehicle, wherein the sensor data comprises a plurality of frames of sensor data indicative of an environment, wherein the sensor data comprises sensor data received using the sensor, and wherein the vehicle is configured to operate in an autonomous mode in the environment;

determine that a first respective frame of the plurality of frames of sensor data indicates detection of an object in the environment;

identify, from within the plurality of frames of sensor data, other respective frames that indicate detection of a second object in the environment;

compare the first respective frame of the plurality of frames of sensor data that indicates detection of the object in the environment to the other respective frames of the plurality of frames of sensor data that indicate detection of the second object in the environment;

based on the comparison, determine:

(i) whether a location of the object indicated by the first respective frame of the plurality of frames of sensor data is substantially the same as a location of the second object indicated by the other respective frames of the plurality of frames of sensor data, and

(ii) a time window indicative of a time between collection of the first respective frame of the plurality of frames of sensor data that indicates detection of the object and collection of the other respective frames of the plurality of frames of sensor data that indicate detection of the second object;

based on prior detections of objects by the sensor, determine (i) an expected number of detections of the object by the sensor in response to the object being a stationary object in the environment and (ii) an expected amount of time between the expected number of detections;

make a determination that the object indicated by the first respective frame of the plurality of frames of sensor data is the same as the second object indicated by the other respective frames of the plurality of frames of sensor data based on:

(i) detection of the second object being indicated more than a threshold number of times in the other respective frames of the plurality of frames of the sensor data, wherein the threshold number of times is based on the expected number of detections,

(ii) the location of the object indicated by the first respective frame of the plurality of frames of sensor data being substantially the same as the location of the second object indicated by the other respective frames of the plurality of frames of sensor data, and

(iii) the time window being greater than a time threshold, wherein the time threshold is based on the expected amount of time; and

based on the determination, provide instructions to control the vehicle in the environment.

8. The vehicle of claim **7**, wherein the computer system is further configured to:

make a second determination that the object indicated by the first respective frame of the plurality of frames of sensor data is different than the second object indicated by the other respective frames of the plurality of frames of sensor data based on:

(i) detection of the second object being indicated less than the threshold number of times in the other respective frames of the plurality of frames of the sensor data,

(ii) the location of the object indicated by the first respective frame of the plurality of frames of sensor data being substantially different than the location of the second object indicated by the other respective frames of the plurality of frames of sensor data, or

(iii) the time window being less than the time threshold.

9. The vehicle of claim **8**, wherein the computer system is configured to provide the instructions to control the vehicle in the environment based also on the second determination.

10. The vehicle of claim **7**,

wherein the object is associated with a category of objects,

wherein the second object is associated with the category of objects, and

wherein the sensor is configured to detect objects in the category of objects.

11. The vehicle of claim **10**, wherein the category of objects comprises a reflector.

12. The vehicle of claim **7**, wherein the sensor data comprises sensor data received from a second vehicle operating in the environment.

13. A non-transitory computer readable medium having stored therein instructions, that when executed by a computer system in a vehicle, cause the computer system to perform functions comprising:

receiving sensor data associated with the vehicle, wherein the sensor data comprises a plurality of frames of sensor data indicative of an environment, wherein the sensor data comprises sensor data from a sensor, and wherein the vehicle is configured to operate in an autonomous mode in the environment;

determining that a first respective frame of the plurality of frames of sensor data indicates detection of an object in the environment;

identifying, from within the plurality of frames of sensor data, other respective frames that indicate detection of a second object in the environment;

comparing the first respective frame of the plurality of frames of sensor data that indicates detection of the object in the environment to the other respective frames of the plurality of frames of sensor data that indicate detection of the second object in the environment;

based on the comparison, determining:

(i) whether a location of the object indicated by the first respective frame of the plurality of frames of sensor data is substantially the same as a location of the second object indicated by the other respective frames of the plurality of frames of sensor data, and

(ii) a time window indicative of a time between collecting the first respective frame of the plurality of frames of sensor data that indicates detection of the object and collecting the other respective frames of the plurality of frames of sensor data that indicate detection of the second object;

based on prior detections of objects by the sensor, determining (i) an expected number of detections of the object by the sensor in response to the object being a stationary object in the environment and (ii) an expected amount of time between the expected number of detections;

making a determination that the object indicated by the first respective frame of the plurality of frames of sensor data is the same as the second object indicated by the other respective frames of the plurality of frames of sensor data based on:

(i) detection of the second object being indicated more than a threshold number of times in the other respective frames of the plurality of frames of the sensor data, wherein the threshold number of times is based on the expected number of detections,

(ii) the location of the object indicated by the first respective frame of the plurality of frames of sensor data being substantially the same as the location of the second object indicated by the other respective frames of the plurality of frames of sensor data, and

(iii) the time window being greater than a time threshold, wherein the time threshold is based on the expected amount of time; and

based on the determination, providing instructions to control the vehicle in the environment.

14. The non-transitory computer readable medium of claim **13**, wherein the instructions are further executable by the computer system in the vehicle to cause the computer system to perform functions comprising:

making a second determination that the object indicated by the first respective frame of the plurality of frames of sensor data is different than the second object indicated by the other respective frames of the plurality of frames of sensor data based on:

(i) detection of the second object being indicated less than the threshold number of times in the other respective frames of the plurality of frames of the sensor data,

(ii) the location of the object indicated by the first respective frame of the plurality of frames of sensor data being substantially different than the location of the second object indicated by the other respective frames of the plurality of frames of sensor data, or

(iii) the time window being less than the time threshold.

15. The non-transitory computer readable medium of claim **14**, wherein providing the instructions to control the vehicle in the environment is based also on the second determination.

16. The non-transitory computer readable medium of claim **13**,

wherein the object is associated with a category of objects,

wherein the second object is associated with the category of objects, and

wherein the sensor is configured to detect objects in the category of objects.

17. The non-transitory computer readable medium of claim **13**, wherein the sensor data comprises sensor data received from a second vehicle operating in the environment.

* * * * *