US008927866B2

(12) **United States Patent**
Nordin et al.

(10) **Patent No.: US 8,927,866 B2**
(45) **Date of Patent: *Jan. 6, 2015**

(54) **COMMUNICATION CABLE WITH IMPROVED CROSSTALK ATTENUATION**

(75) Inventors: **Ronald A. Nordin**, Naperville, IL (US); **Masud Bolouri-Saransar**, Orland Park, IL (US); **Royal O. Jenner**, Tinley Park, IL (US); **Timothy J. Houghton, II**, Chicago, IL (US); **Thomas G. McLaughlin**, Taylor Mill, KY (US); **Kenneth E. Cornelison**, Cincinnati, OH (US); **David P. Camp, II**, Florence, KY (US)

(73) Assignee: **Panduit Corp.**, Tinley Park, IL (US)

(*) Notice: Subject to any disclaimer, the term of this patent is extended or adjusted under 35 U.S.C. 154(b) by 254 days.

This patent is subject to a terminal disclaimer.

(21) Appl. No.: **13/474,228**

(22) Filed: **May 17, 2012**

(65) **Prior Publication Data**

US 2012/0222883 A1 Sep. 6, 2012

Related U.S. Application Data

(63) Continuation of application No. 12/467,855, filed on May 18, 2009, now Pat. No. 8,183,462.

(60) Provisional application No. 61/054,330, filed on May 19, 2008.

(51) **Int. Cl.**

H01B 7/00	(2006.01)
H01B 11/10	(2006.01)
H01B 11/08	(2006.01)
H01B 7/18	(2006.01)

(52) **U.S. Cl.**

CPC ***H01B 11/1008*** (2013.01); ***H01B 11/08*** (2013.01); *H01B 7/1845* (2013.01)

USPC ..... **174/110 R**; 174/113 R; 174/113 C

(58) **Field of Classification Search**

CPC H01B 11/08; H01B 11/02; H01B 11/002; H01B 7/00; H01B 11/06; H01B 11/04; H01B 13/06; H01B 7/185; H01B 11/1008; H01B 13/24; H01B 3/445; C08K 3/22; C08K 3/24; H02G 11/00; H02G 3/00

USPC ..... 174/36, 110 R, 110 SP, 113 R, 114 R, 174/114 S, 115, 116, 113 C, 113 AS

See application file for complete search history.

(56) **References Cited**

U.S. PATENT DOCUMENTS

2,109,334	A	2/1938	Kaden et al.	
2,796,463	A *	6/1957	Mallinckrodt	178/45

(Continued)

FOREIGN PATENT DOCUMENTS

EP	1575063	A2	9/2005
JP	S6317192	U	11/1988
JP	2009205828	A	9/2009
WO	2006105166	A3	10/2006

Primary Examiner — William H Mayo, III

(74) *Attorney, Agent, or Firm* — Christopher S. Clancy; Christopher K. Marlow

(57) **ABSTRACT**

A barrier tape used as part of a communication cable has one or more barrier layers of discontinuous conductive segments. Conductive segments of one barrier layer are preferably sized and shaped to overlie gaps between conductive segments of another barrier layer.

7 Claims, 4 Drawing Sheets

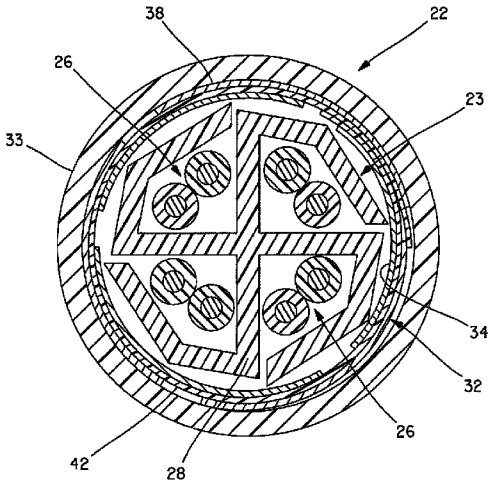

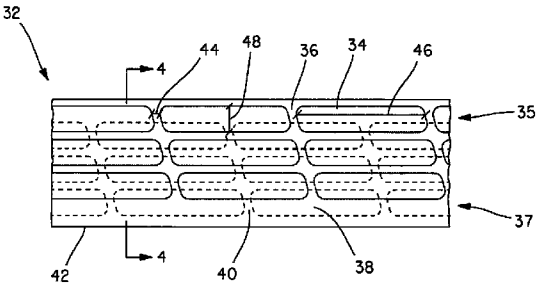

(56) **References Cited**

U.S. PATENT DOCUMENTS

3,312,774	A		4/1967	Peterson	
3,573,676	A	*	4/1971	Mayer	333/202
3,794,750	A		2/1974	Garshick	
3,896,380	A	*	7/1975	Martin	455/523
4,129,841	A	*	12/1978	Hildebrand et al.	333/237
4,236,779	A		12/1980	Tang	
4,339,733	A	*	7/1982	Smith	333/237
4,684,437	A		8/1987	Donelon et al.	
4,743,725	A	*	5/1988	Risman	219/691
4,788,088	A	*	11/1988	Kohl	428/34.5
5,132,488	A		7/1992	Tessier et al.	
5,465,395	A	*	11/1995	Bartram	455/523
5,473,336	A		12/1995	Harman et al.	
5,969,295	A		10/1999	Boucino et al.	
6,639,152	B2		10/2003	Glew et al.	
6,818,832	B2		11/2004	Hopkinson et al.	
7,332,676	B2	*	2/2008	Sparrowhawk	174/102 R
7,335,837	B2		2/2008	Pfeiler et al.	
2004/0055781	A1		3/2004	Cornibert et al.	
2005/0199415	A1	*	9/2005	Glew	174/113 C
2006/0048961	A1	*	3/2006	Pfeiler et al.	174/36
2006/0048964	A1	*	3/2006	Rick	174/66
2006/0169478	A1		8/2006	Clark	
2007/0037419	A1		2/2007	Sparrowhawk	
2009/0223694	A1		9/2009	Nordin et al.	

* cited by examiner

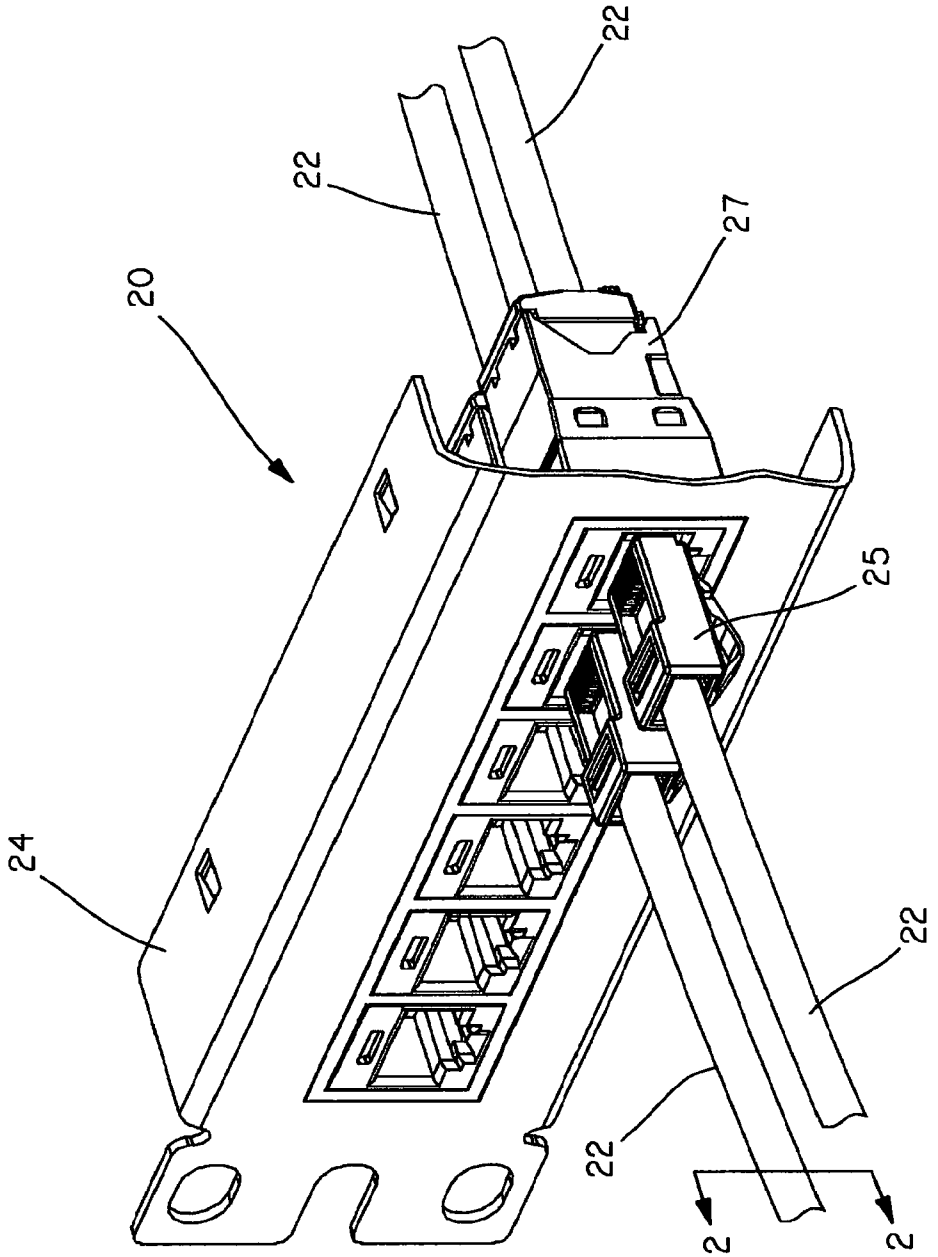

FIG. 1

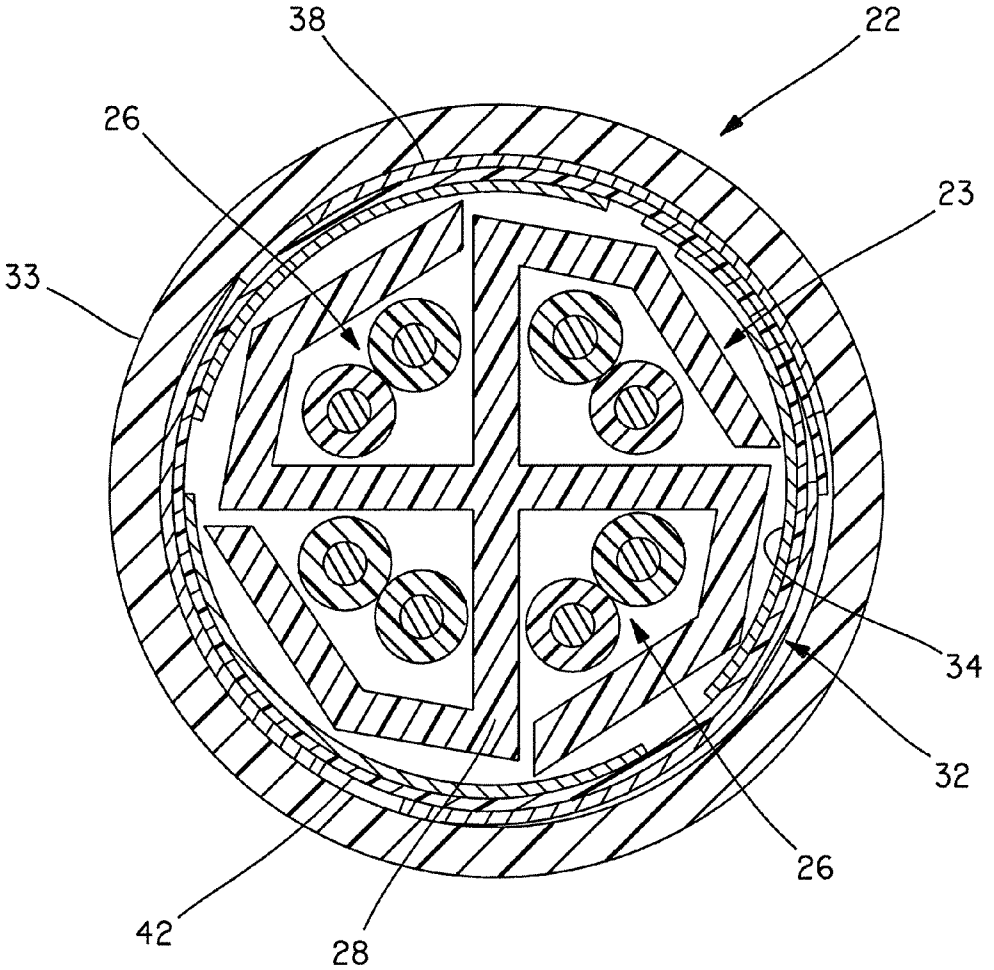

FIG.2

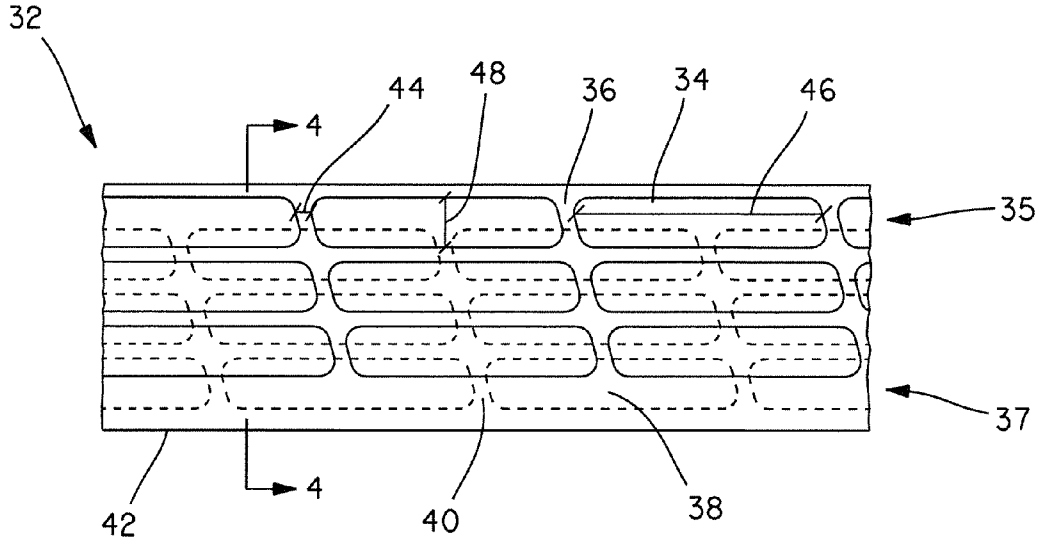

FIG.3

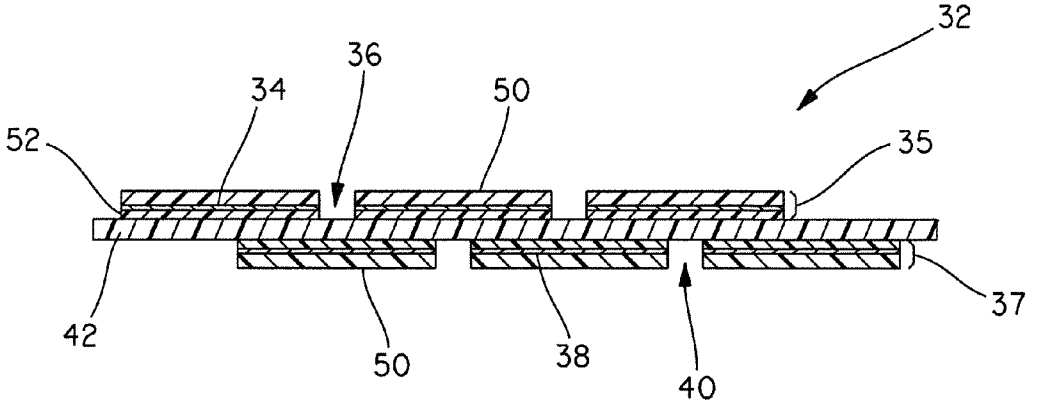

FIG.4

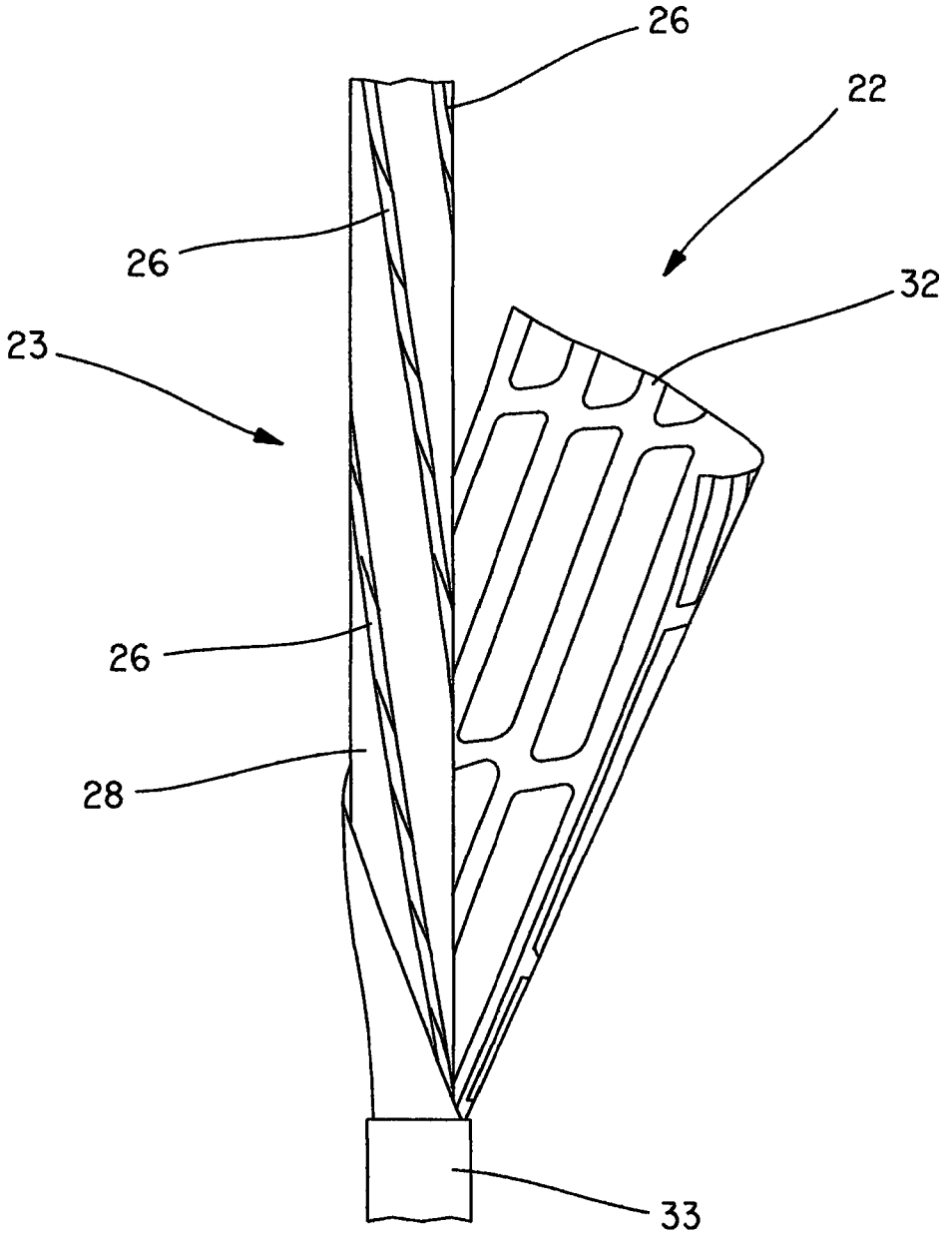

FIG.5

COMMUNICATION CABLE WITH IMPROVED CROSSTALK ATTENUATION

CROSS-REFERENCE TO RELATED APPLICATIONS

This application is a continuation of U.S. patent application Ser. No. 12/467,855, filed May 18, 2009, which claims the benefit of U.S. patent application Ser. No. 61/054,330, filed May 19, 2008. The subject matter of which is hereby incorporated by reference in its entirety.

FIELD OF THE INVENTION

The present invention relates to communication cables, and more particularly to methods and apparatus to enhance the attenuation of crosstalk associated with such cables.

BACKGROUND OF THE INVENTION

As networks become more complex and have a need for higher bandwidth cabling, attenuation of cable-to-cable crosstalk (or "alien crosstalk") becomes increasingly important to provide a robust and reliable communication system. Alien crosstalk is primarily coupled electromagnetic noise that can occur in a disturbed cable arising from signal-carrying cables that run near the disturbed cable. Additionally, crosstalk can occur between twisted pairs within a particular cable, which can additionally degrade a communication system's reliability.

SUMMARY OF THE INVENTION

In some embodiments, the present invention relates to the use of multiple layers of material having conductive segments as a method of enhancing the attenuation of alien crosstalk. In one embodiment, the present invention comprises a double-layered metal patterned film (or barrier tape) that is wrapped around the wire pairs of a high performance 10 Gb/s (gigabit/second) unshielded twisted pair (UTP) cable. In general, the present invention can be used in communication cable of higher or lower frequencies, such as (TIA/EIA standards) Category 5e, Category 6, Category 6A, Category 7, and copper cabling used for even higher frequency or bit rate applications, such as 40 Gb/s and 100 Gb/s. The conductive segments in the layers are positioned so that gaps in one layer are substantially overlain by conductive segments of a neighboring layer. The multiple layers reduce crosstalk while gaps between the conductive segments reduce the emission of electromagnetic energy from the conductive material and also reduce the susceptibility of the conductive material to radiated electromagnetic energy.

The present invention solves deficiencies in the prior art of UTP cable to reduce cable-to-cable crosstalk, or other types of crosstalk. Embodiments of the present invention may be applied to other types of cable in addition to UTP cable.

BRIEF DESCRIPTION OF THE DRAWINGS

For the purpose of facilitating an understanding of the inventions, the accompanying drawings and description illustrate embodiments thereof, from which the inventions, structure, construction and operation, and many related advantages may be readily understood and appreciated.

FIG. **1** is a perspective view of an embodiment of a communication system including multiple communication cables according to the present invention;

FIG. **2** is a cross-sectional view of one of the communication cables of FIG. **1**;

FIG. **3** is a fragmentary plan view of an embodiment of a barrier tape according to the present invention and used in the cables of FIGS. **1** and **2**;

FIG. **4** is a cross-sectional view of the barrier tape of FIG. **3**, taken along section **4-4** in FIG. **3**; and

FIG. **5** is a perspective view of an embodiment of the cable of FIG. **1**, illustrating the spiral nature of the barrier tape installed within the cable.

DETAILED DESCRIPTION OF THE EMBODIMENTS

Referring now to the drawings, and more particularly to FIG. **1**, there is shown a communication system **20**, which includes at least one communication cable **22**, connected to equipment **24**. Equipment **24** is illustrated as a patch panel in FIG. **1**, but the equipment can be passive equipment or active equipment. Examples of passive equipment can be, but are not limited to, modular patch panels, punch-down patch panels, coupler patch panels, wall jacks, etc. Examples of active equipment can be, but are not limited to, Ethernet switches, routers, servers, physical layer management systems, and power-over-Ethernet equipment as can be found in data centers/telecommunications rooms; security devices (cameras and other sensors, etc.) and door access equipment; and telephones, computers, fax machines, printers and other peripherals as can be found in workstation areas. Communication system **20** can further include cabinets, racks, cable management and overhead routing systems, for example.

Communication cable **22** is shown in the form of an unshielded twisted pair (UTP) cable, and more particularly a Category 6A cable which can operate at 10 Gb/s, as is shown more particularly in FIG. **2**, and which is described in more detail below. However, the present invention can be applied to and/or implemented in a variety of communications cables, as well as other types of cables. Cables **22** can be terminated directly into equipment **24**, or alternatively, can be terminated in a variety of plugs **25** or jack modules **27** such as RJ45 type, jack module cassettes, Infiniband connectors, RJ21, and many other connector types, or combinations thereof. Further, cables **22** can be processed into looms, or bundles, of cables, and additionally can be processed into preterminated looms.

Communication cable **22** can be used in a variety of structured cabling applications including patch cords, backbone cabling, and horizontal cabling, although the present invention is not limited to such applications. In general, the present invention can be used in military, industrial, telecommunications, computer, data communications, and other cabling applications.

Referring more particularly to FIG. **2**, there is shown a transverse cross-section of cable **22**, taken along section line **2-2** in FIG. **1**. Cable **22** includes an inner core **23** of four twisted conductive wire pairs **26** that are separated with a crossweb **28**. A wrapping of barrier tape **32** surrounds crossweb **28**. Barrier tape **32** can be helically wound around crossweb **28**. Cable **22** also can include an outer insulating jacket **33**. The barrier tape **32** is shown in a condensed version for illustration in FIG. **2**, showing only an insulating substrate **42** and conductive segments **34** and **38**. Crossweb **28** includes a central "x" section which segregates the twisted pairs **26** from each other, and perimeter sections extending from the periphery of the "x" section which segregate the twisted pairs **26** from barrier tape **32**. Referring also to FIGS. **3** and **4**, barrier tape **32** includes a first barrier layer **35** (shown in FIG. **2** as an

inner barrier layer) comprising conductive segments **34** separated by gaps **36**; a second barrier layer **37** (shown in FIG. **2** as an outer barrier layer) comprising conductive segments **38** separated by gaps **40** in the conductive material of segments **38**; and an insulating substrate **42** separating conductive segments **34** and gaps **36** of the first conductive layer from conductive segments **38** and gaps **40** of the second conductive layer. The first and second barrier layers, and more particularly conductive segments **34** and conductive segments **38**, are staggered within the cable so that gaps **40** of the outer barrier layer align with the conductive segments **34** of the inner conductive layer. Barrier tape **32** can be helically or spirally wound around the inner insulating layer **30**. Alternatively, the barrier tape can be applied around the insulative layer in a non-helical way (e.g., "cigarette" or longitudinal style).

Outer insulating jacket **33** can be 15 mil thick (however, other thicknesses are possible). The overall diameter of cable **22** can be approximately 300 mils, for example; however, other thicknesses are possible.

FIG. **3** is a plan view of barrier tape **32** illustrating the patterned conductive segments on an insulative substrate where two barrier layers **35** and **37** of discontinuous conductive material are used. The conductive segments **34** and **38** are arranged in a series of plane figures along both the longitudinal and transverse direction of an underlying substrate **42**. As described, the use of multiple barrier layers of patterned conductive segments facilitates enhanced attenuation of alien crosstalk, by effectively reducing coupling by a cable **22** to an adjacent cable, and by providing a barrier to coupling from other cables. The discontinuous nature of the conductive segments **34** and **38** reduces or eliminates radiation from the barrier layers **35** and **37**. In the embodiment shown, a double-layered gridlike metal pattern is incorporated in barrier tape **32**, which spirally wraps around the twisted wire pairs **26** of the exemplary high performance 10 Gb/s cable. The pattern may be chosen such that conductive segments of a barrier layer overlap gaps **36**, **40** from the neighboring barrier layer. In FIGS. **3** and **4**, for example, both the top **35** and bottom **37** barrier layers have conductive segments that are arranged in a series of 15° parallelograms (with rounded corners) approximately 1071 mil×203 mil with a 60 mil gap size **44** between segments in both the horizontal and vertical directions as shown in FIG. **3**. According to one embodiment, the rounded corners are provided with a radius of approximately 1/16".

Referring to the upper barrier layer **35**, the performance of any single layer of conductive material is at least partially dependent on the gap size **44** of the discontinuous pattern and the longitudinal length **46** of the discontinuous segments and can also be at least somewhat dependent on the transverse widths **48** of the conductive segments. In general, the smaller the gap size **44** and longer the longitudinal length **46**, the better is the cable-to-cable crosstalk attenuation. However, if the longitudinal pattern length **46** is too long, the layers of discontinuous conductive material can radiate and can be susceptible to electromagnetic energy in the frequency range of relevance. One solution is to design the longitudinal pattern length **46** so it is slightly greater than the average pair lay of the twisted conductive wire pairs within the surrounded cable but smaller than one quarter of the wavelength of the highest frequency signal transmitted over the wire pairs. The pair lay is equal to the length of one complete twist of a twisted wire pair.

Twisted pairs in a communication cable may be colored blue, orange, green, and brown. In the embodiment shown the twist lengths (i.e., pair lays) for four twisted conductive wire pairs are 0.828 cm for the blue pair, 1.204 cm for the orange pair, 0.897 cm for the green pair and 1.074 cm for the brown pair. Typical pair lays for high-performance cable (e.g., 10 Gb/s) are in the range of 0.8 cm to 1.3 cm. Hence the conductive segment lengths are typically within the range of from approximately 1.3 cm to approximately 10 cm for cables adapted for use at a frequency of 500 MHz. At higher or lower frequencies, the lengths will vary lower or higher, respectively.

Further, for a signal having a frequency of 500 MHz, the wavelength will be approximately 40 cm when the velocity of propagation is 20 cm/ns. At this wavelength, the lengths of the conductive segments of the barrier layers should be less than 10 cm (i.e., one quarter of a wavelength) to prevent the conductive segments from radiating electromagnetic energy.

It is also desirable that the transverse widths **48** of the conductive segments "cover" the twisted wire pairs as they twist in the cable core. In other words, it is desirable for the transverse widths **48** of the conductive segments to be wide enough to overlie a twisted pair in a radial direction outwardly from the center of the cable. Generally, the wider the transverse widths **48**, the better the cable-to-cable crosstalk attenuation is. It is further desirable for the barrier tape **32** to be helically wrapped around the cable core at approximately the same rate as the twist rate of the cable's core. In the embodiment shown the cable strand lay is 7.62 cm. For high-performance cable (e.g., 10 Gb/s), typical cable strand lays (i.e., the twist rate of the cable's core) are in the range of from approximately 6 cm to approximately 12 cm. It is preferred that barrier tapes according to the present invention are wrapped at the same rate as the cable strand lay (that is, one complete wrap in the range of from approximately 6 cm to approximately 12 cm). However, the present invention is not limited to this range of wrap lengths, and longer or shorter wrap lengths may be used.

A high-performing application of a barrier tape of discontinuous conductive segments is to use one or more conductive barrier layers to increase the cable-to-cable crosstalk attenuation. For barriers of multiple layers, barrier layers are separated by a substrate so that the layers are not in direct electrical contact with one another. Although two barrier layers **35** and **37** are illustrated, the present invention can include a single barrier layer, or three or more barrier layers.

FIG. **4** illustrates a cross-sectional view, taken along section line **4-4** in FIG. **3**, of barrier tape **32** in more detail as employed with two barrier layers **35** and **37**. Each barrier layer includes a substrate **50** and conductive segments **34** or **38**. The substrate **50** is an insulative material and can be approximately 0.75 mils thick, for example. The layer of conductive segments contains plane figures, for example parallelograms with rounded corners, of aluminum having a thickness of approximately 0.35 mils. According to other embodiments of the present invention, the conductive segments may be made of different shapes such as regular or irregular polygons, other irregular shapes, curved closed shapes, isolated regions formed by conductive material cracks, and/or combinations of the above. The present invention can combine different shapes in multiple rows of conductive segments. Other conductive materials, such as copper, gold, or nickel may be used for the conductive segments. Other conductive segment thicknesses could range from approximately 0.3 mils to approximately 1.5 mils. Semiconductive materials may be used in those areas as well. Examples of the material of the insulative substrate **50** include polyester, polypropylene, polyethylene, polyimide, and other materials.

The conductive segments **34** and **38** are attached to a common insulative substrate **42** via layers of spray glue **52**. The

layers of spray glue **52** can be 0.5 mils thick and the common layer of insulative substrate **42** can be 1.5 mil thick, for example. Given the illustrated example thicknesses for the layers, the overall thickness of the barrier tape **32** of FIG. **4** is approximately 4.7 mils. It is to be understood that different material thicknesses may be employed for the different layers. According to some embodiments, it is desirable to keep the distance between the two layers of conductive segments **34** and **38** small so as to reduce capacitance between those layers.

FIG. **5** is a fragmentary, perspective and partially exploded view of an embodiment of cable **22**, illustrating the spiral nature of barrier tape **32** installed within cable **22**. FIG. **5** illustrates how barrier tape **32** is spirally wound between crossweb **28** and outer jacket **33** of cable **22**. Alternatively, the barrier tape can be applied around the crossweb **28** in a non-helical way (e.g., cigarette or longitudinal style). It is desirable for the helical wrapping of the barrier tape **32** to have a wrap rate approximately equal to the core lay length of the cable **22** (i.e., the rate at which the twisted pairs **26** of the cable wrap around each other, equivalent to the crossweb **28** wrap rate). However, in some embodiments the helical wrapping of the barrier tape **32** may have a wrap rate greater or less than the core lay length of the cable **22**.

One of the design considerations of the present invention is constructing the barrier tape structure (such as conductive segments' dimensions, shape, spacing, quantity, number of rows and orientation) with respect to the effective twist rate (combined twist lay with cable lay) of each of the twisted pairs, to provide enhanced cable-to-cable coupling attenuation. If the relationship between the barrier tape structure and effective twist rate is not correct, the interval of the repeating pattern of the barrier tape in relation to the effective twist rate of each of the twisted pairs can create a strong coupling mechanism to adjacent cable(s) in various segments of the operating frequency spectrum of the channels, which is undesirable. The embodiment shown in FIGS. **1**-**5** is one combination, according to the present invention, which provides effective ANEXT and AFEXT attenuation up to 500 MHz. The present invention also provides high longitudinal impedance in the barrier tape which reduces or eliminates EMI susceptibility in comparison to the performance of known UTP cable.

Barrier tapes according to the present invention can be spirally, or otherwise, wrapped around individual twisted pairs within the cable to improve crosstalk attenuation between the twisted pairs. Further, barrier layers according to the present invention may be incorporated into different structures within a cable, including an insulating layer, an outer insulating jacket, or a twisted-pair divider structure.

From the foregoing, it can be seen that there have been provided features for improved performance of cables to increase attenuation of cable-to-cable crosstalk. While particular embodiments of the present invention have been shown and described, it will be obvious to those skilled in the art that changes and modifications may be made without departing from the invention in its broader aspects. Therefore, the aim is to cover all such changes and modifications as fall within the true spirit and scope of the invention. The matter set forth in the foregoing description and accompanying drawings is offered by way of illustration only and not as a limitation.

The invention claimed is:

1. A communications cable comprising:

an inner core having a plurality of twisted wire pairs, each of the twisted wire pairs having a lay length wherein a lay length is defined as a length of one complete twist of a twisted wire pair; and

a barrier tape wrapped around the inner core, the barrier tape having a plurality of parallelogram-shaped conductive segments wherein each conductive segment has a length that is greater than an average lay length of the twisted wire pairs and smaller than one quarter of the wavelength of a highest frequency signal transmitted over the twisted wire pairs.

2. The communications cable of claim **1** wherein the conductive segments have transverse widths at least as wide as to overlie a twisted wire pair.

3. The communications cable of claim **2** wherein the barrier tape is helically wrapped around the inner core.

4. The communications cable of claim **3** wherein the barrier tape is helically wrapped around the inner core at a rate similar to a twist rate of the inner core.

5. The communications cable of claim **4** wherein the inner core also has a crossweb separating the twisted wire pairs.

6. The communication cable of claim **5** further comprising a inner insulating layer, wherein the inner insulating layer immediately surrounds the inner core and the barrier tape is wrapped around the inner insulating layer.

7. The communications cable of claim **6** further comprising an outer insulating jacket.

* * * * *