United States Patent

[11] **3,622,683**

[72] Inventors **Walter L. Roberts**
Hickory;
Frederic N. Wilkenloh, Conover, both of N.C.

[21] Appl. No. **778,073**
[22] Filed **Nov. 22, 1968**
[45] Patented **Nov. 23, 1971**
[73] Assignee **Superior Continental Corporation**
Hickory, N.C.

[54] **TELEPHONE CABLE WITH IMPROVED CROSSTALK PROPERTIES**
37 Claims, 24 Drawing Figs.

[52] **U.S. Cl.** **174/36,** 174/25, 174/27, 174/103, 174/105, 174/107, 174/113, 174/115
[51] **Int. Cl.** **H01b 11/08**
[50] **Field of Search** 174/102–109, 113, 115, 116, 119, 36, 27, 25, 26

[56] **References Cited**

UNITED STATES PATENTS

311,174	1/1885	Clark	174/105
3,233,036	2/1966	Jachimowicz	174/107
3,306,971	2/1967	Olson et al.	174/119

FOREIGN PATENTS

105,876	11/1937	Australia	174/36
1,120,216	7/1956	France	174/113
775,841	1/1935	France	174/36
657,411	3/1938	Germany	174/36
314,564	7/1929	Great Britain	174/36
434,855	9/1935	Great Britain	174/36
449,582	6/1936	Great Britain	174/103
995,582	6/1965	Great Britain	174/23
367,814	2/1932	Great Britain	174/36

OTHER REFERENCES

Communications News, Apr., 1969

M. C. Biskeborn & D. P. Dobbin, Jelly Blend Waterproofs Cable, Bell Laboratories Record, March 1969, p. 71, 72, 73, 74, 75. Copy in 174–23

Primary Examiner—Lewis H. Myers
Assistant Examiner—A. T. Grimley
Attorney—Roy B. Moffitt

ABSTRACT: Disclosed herein is an economical telephone cable structure and method of making same, such cable structure possessing improved crosstalk properties. A plurality of insulated electrical conductors (pairs), of an otherwise conventional telephone cable design are divided into at least two portions by plastic-coated metal foil strip or tape. Measurements between pairs, divided by this plastic-coated metal foil, of unwanted energy transferred from one conductor to another by means of mutual inductive, capacity, or conductive coupling (crosstalk), shows greatly improved properties over undivided cable pairs or divided cable pairs of prior art. By dividing electrical conductor telephone pairs within a telephone cable structure with plastic-coated metal foil, the crosstalk properties are so vastly improved that a greater spacing between repeaters can be designed into a telephone cable system, as compared to a cable system employing prior art divided or undivided cable pairs.

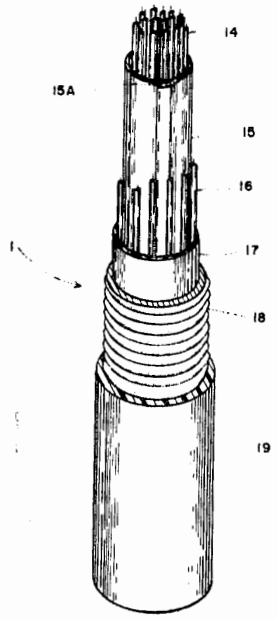

CommScope Exhibit 1009

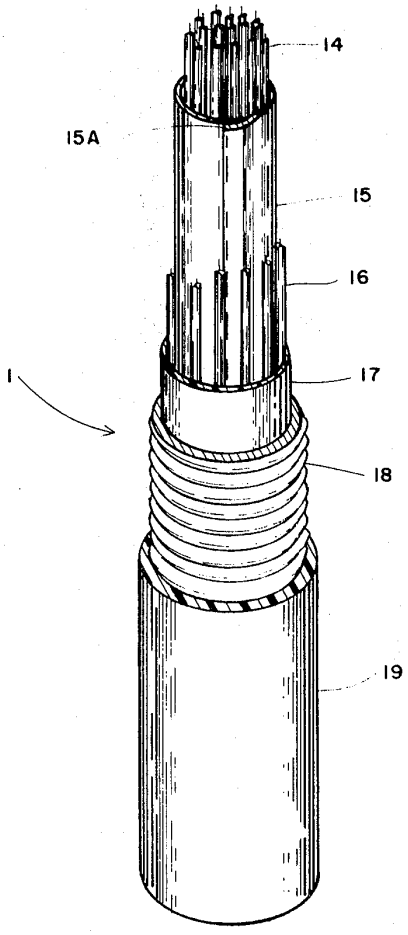

FIG. 1

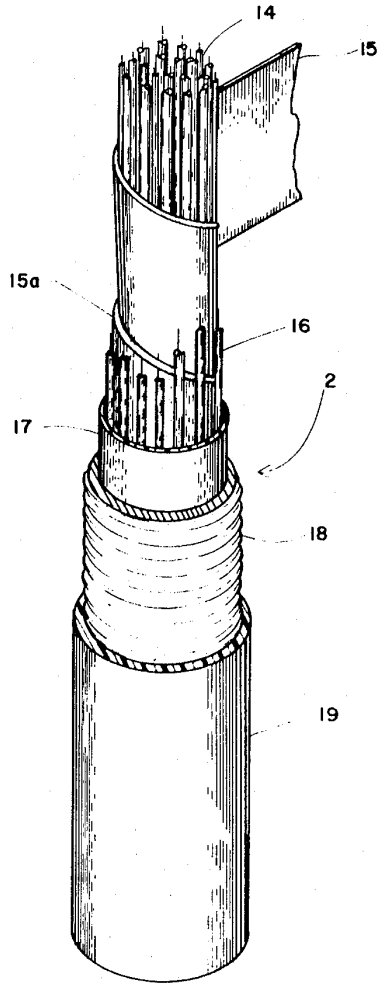

FIG. 2

INVENTORS
WALTER L. ROBERTS
FREDERIC N. WILKENLOH
Roy B. Martin
ATTORNEY

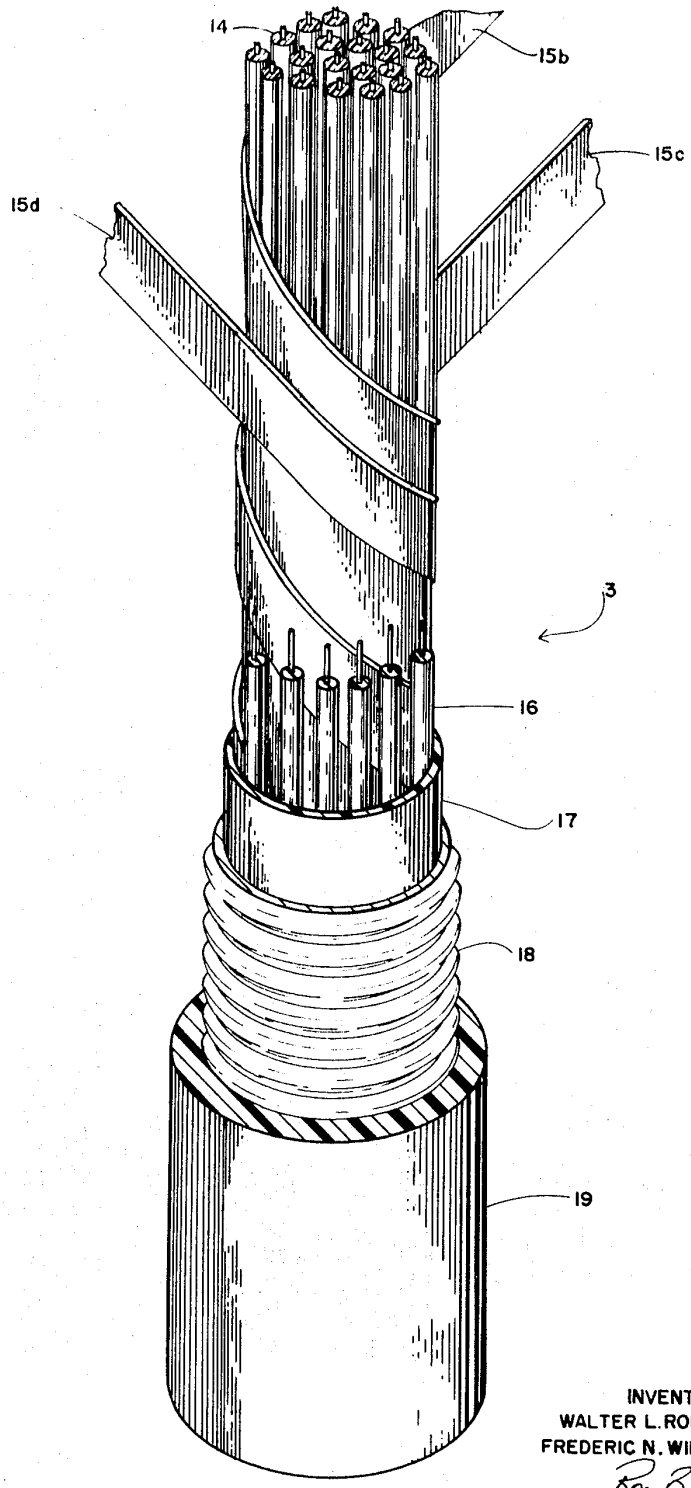

FIG. 3

INVENTORS
WALTER L. ROBERTS
FREDERIC N. WILKENLOH
Roy B. Morris
ATTORNEY

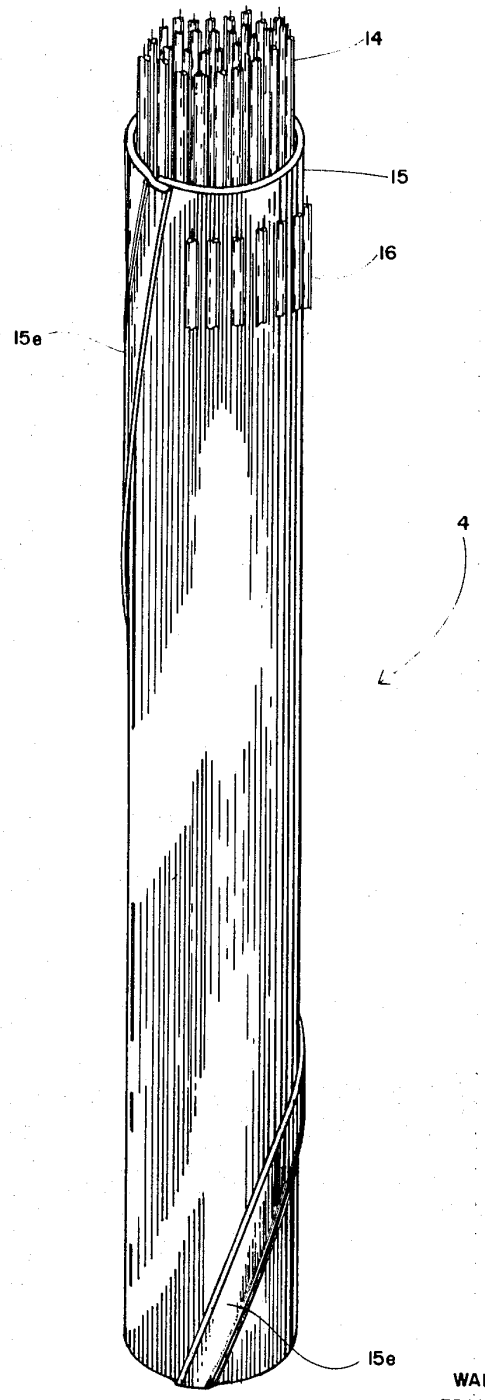

FIG. 4

INVENTORS
WALTER L. ROBERTS
FREDERIC N. WILKENLOH
Roy B. Morris
ATTORNEY

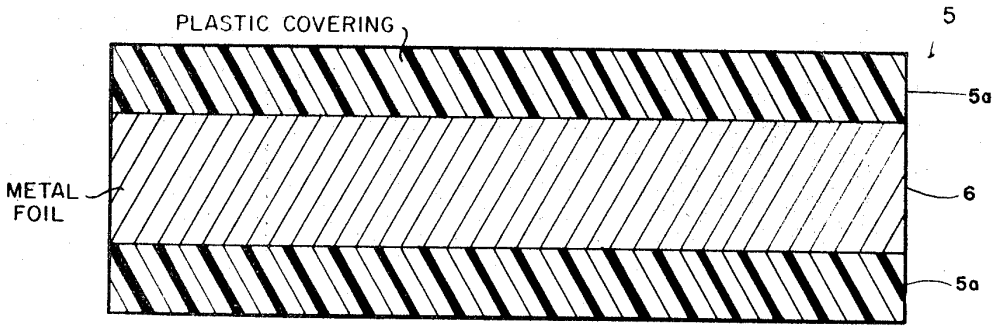

FIG. 5

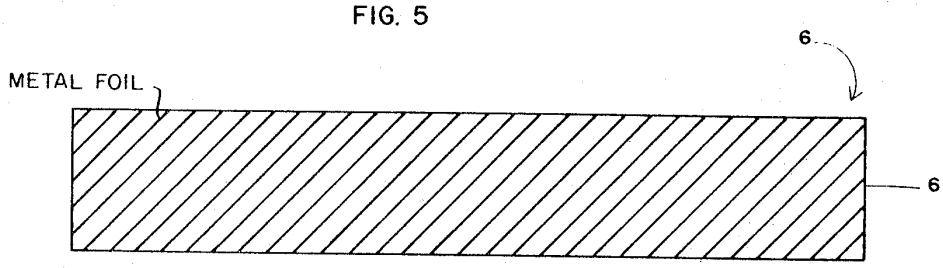

FIG. 6

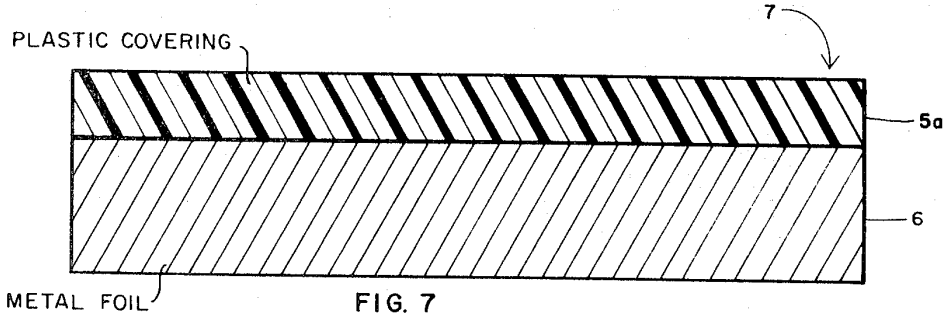

FIG. 7

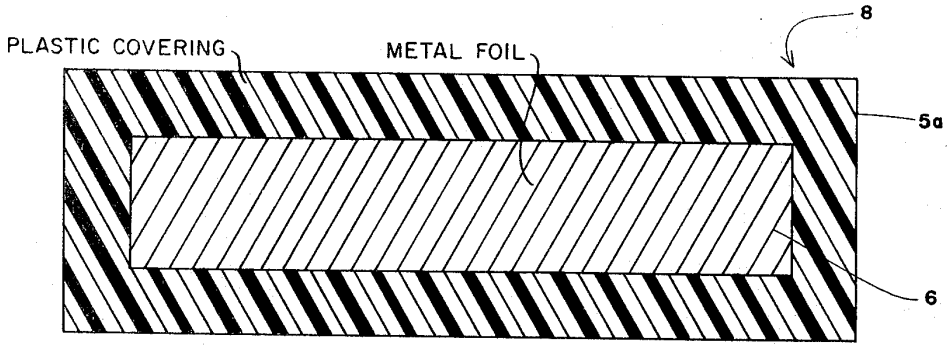

FIG. 8

INVENTORS
WALTER L. ROBERTS
FREDERIC N. WILKENLOH
Roy B. Morris
ATTORNEY

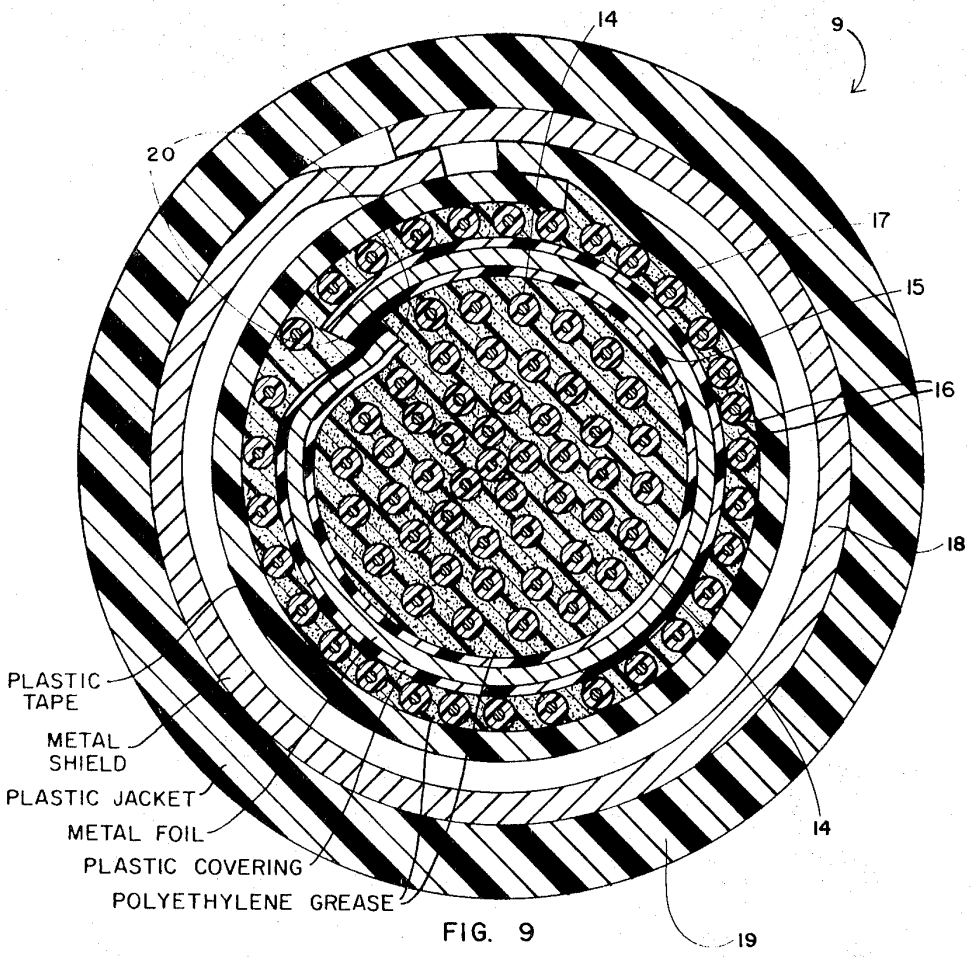

FIG. 9

INVENTORS
WALTER L. ROBERTS
FREDERIC N. WILKENLOH
Roy B. Moffitt
ATTORNEY

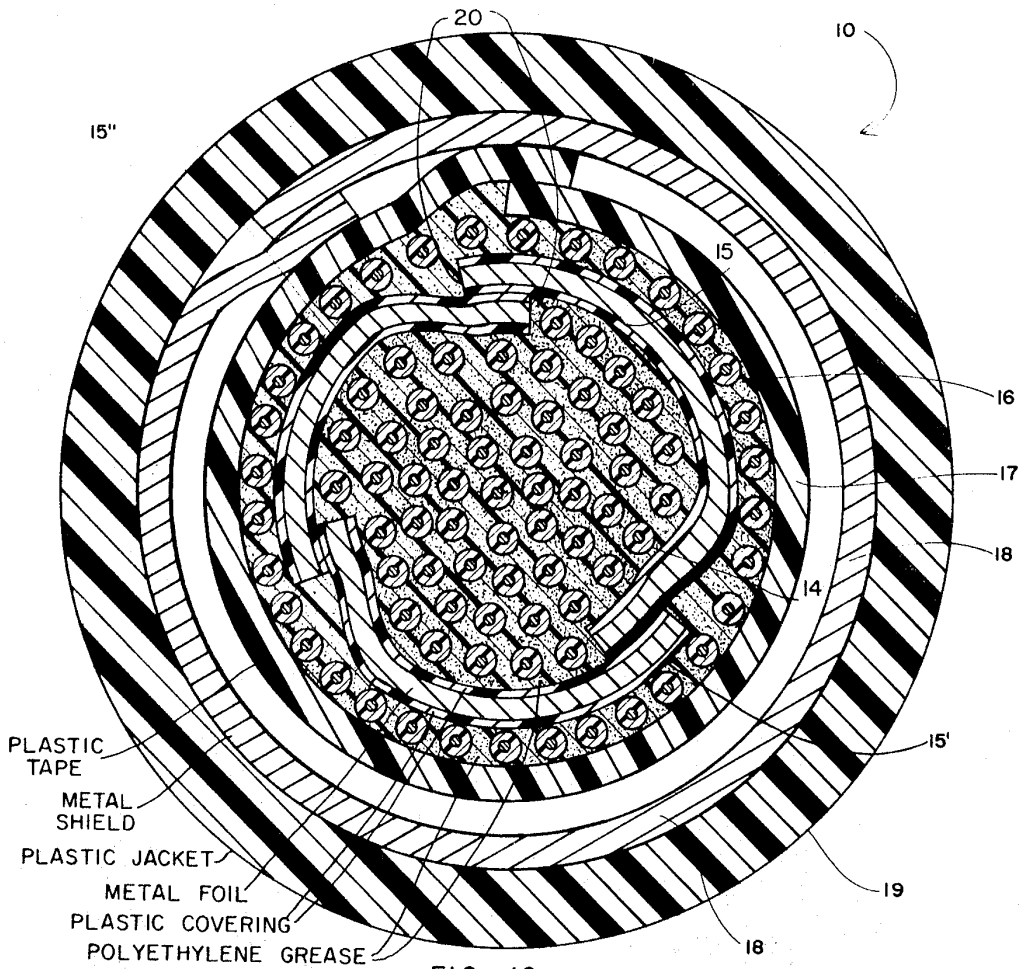

FIG. 10

INVENTORS
WALTER L. ROBERTS
FREDERIC N. WILKENLOH

Roy B. Moritz

ATTORNEY

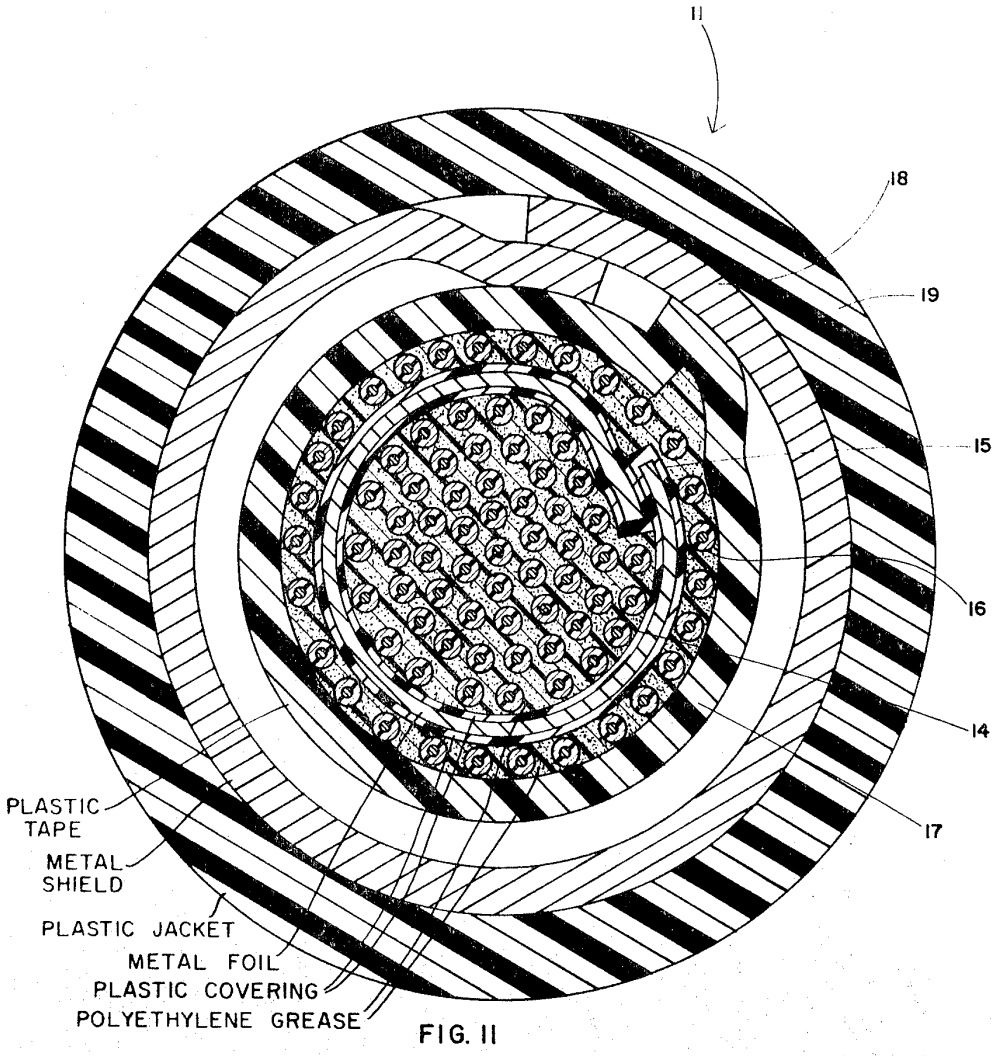

FIG. 11

INVENTORS
WALTER L. ROBERTS
FREDERIC N. WILKENLOH

Roy B. Martin
ATTORNEY

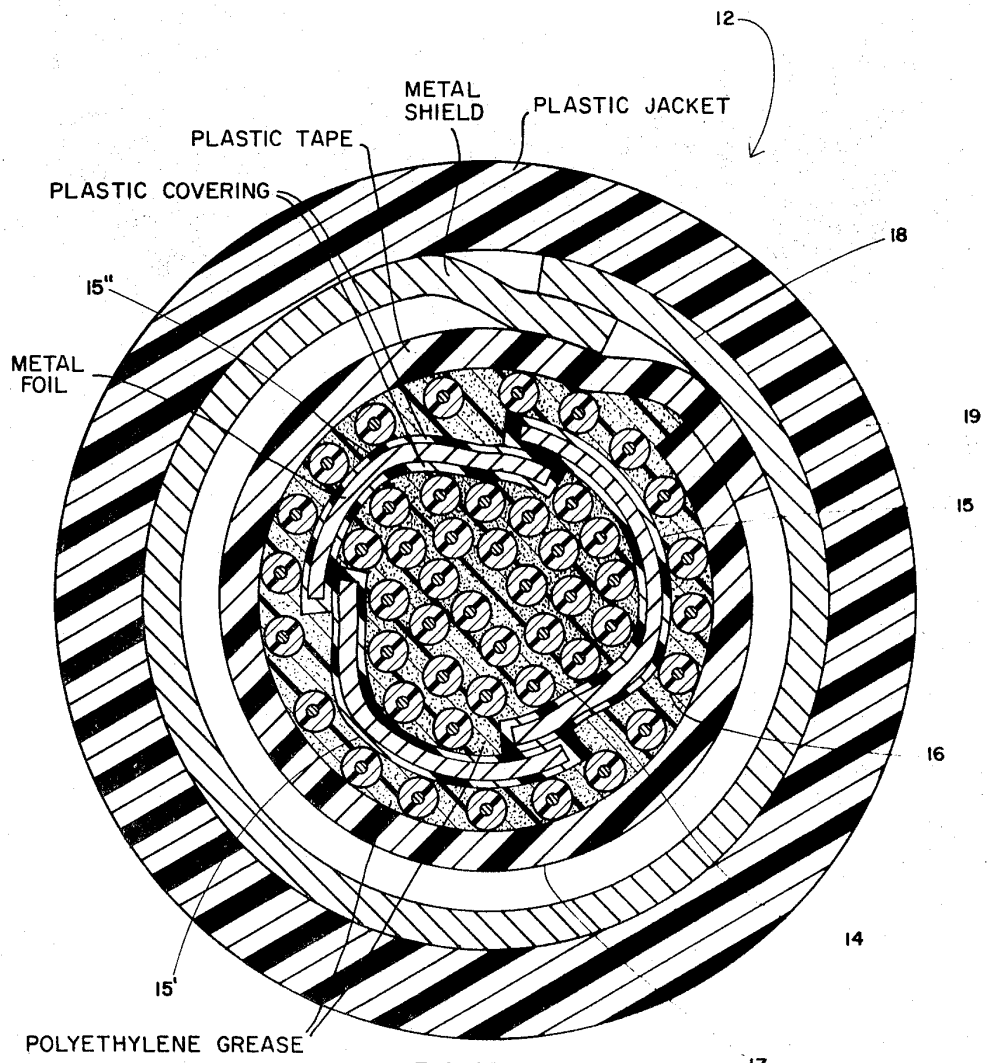

FIG. 12

INVENTORS
WALTER L. ROBERTS
FREDERIC N. WILKENLOH

Roy B. Morris

ATTORNEY

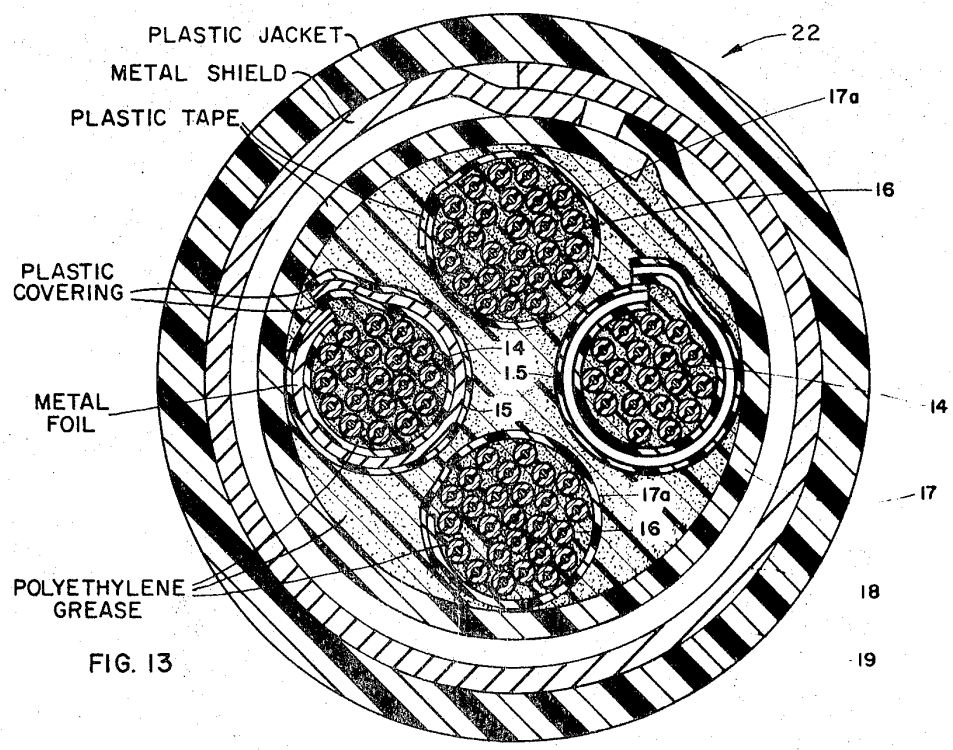

FIG. 13

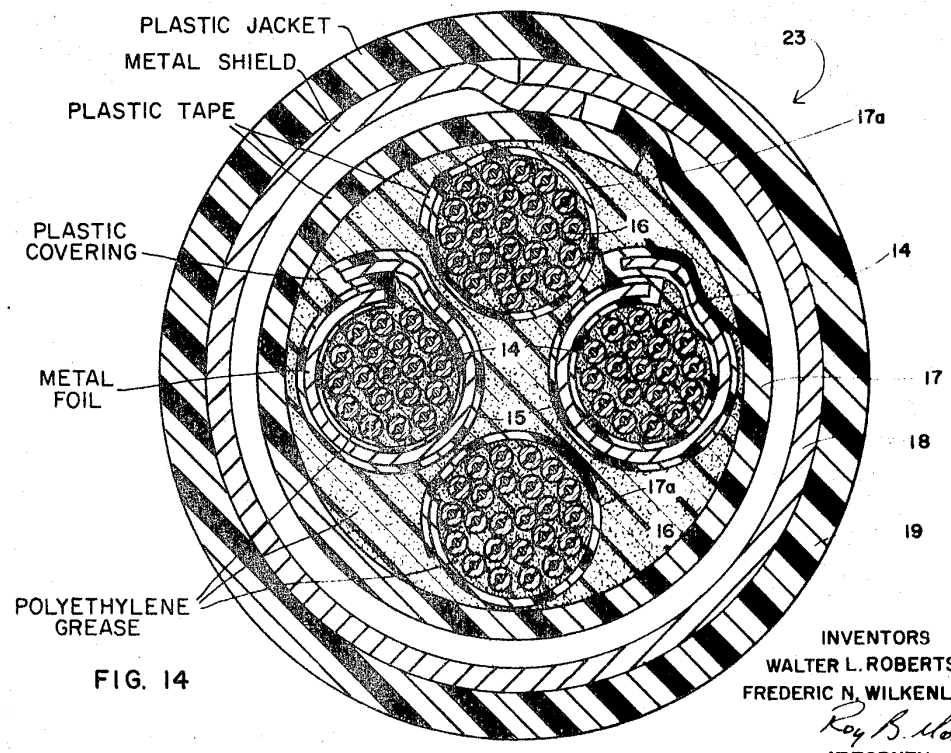

FIG. 14

INVENTORS
WALTER L. ROBERTS
FREDERIC N. WILKENLOH
Roy B. Martin
ATTORNEY

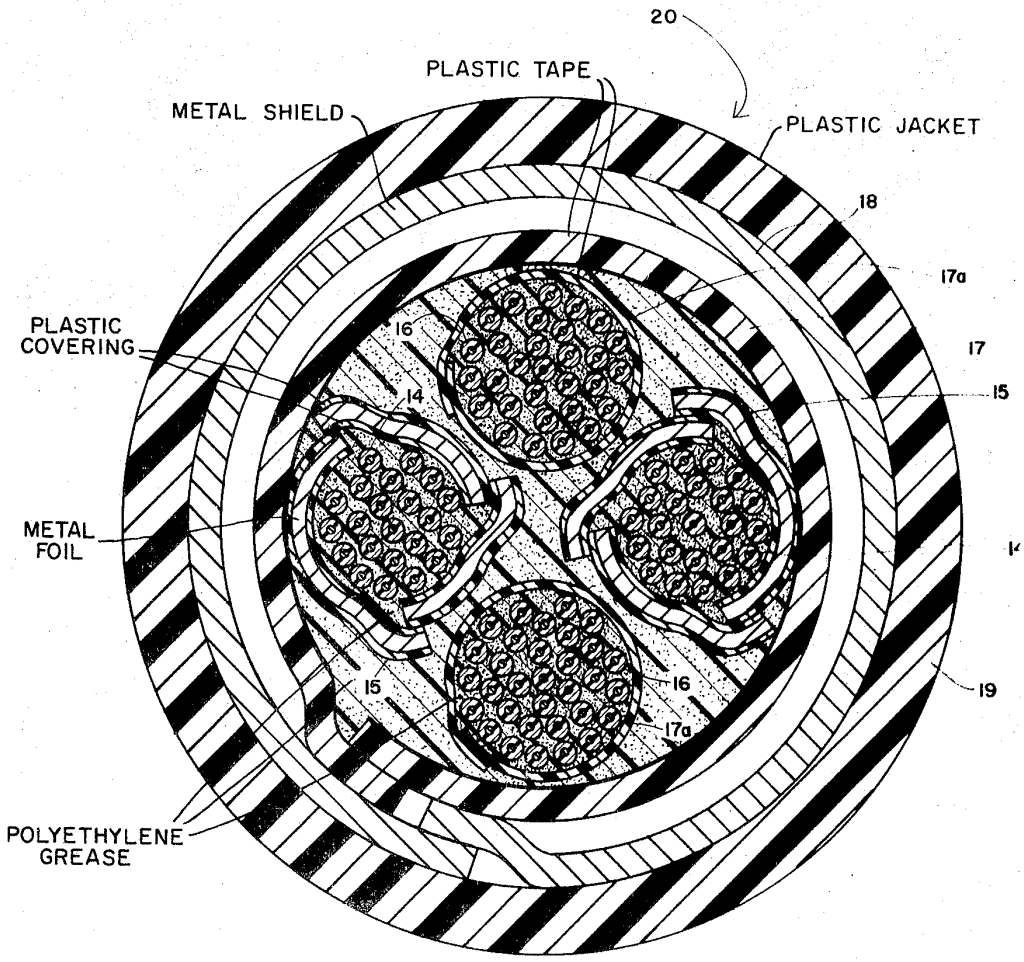

FIG. 15

INVENTORS
WALTER L. ROBERTS
FREDERIC N. WILKENLOH
Roy B. Morris
ATTORNEY

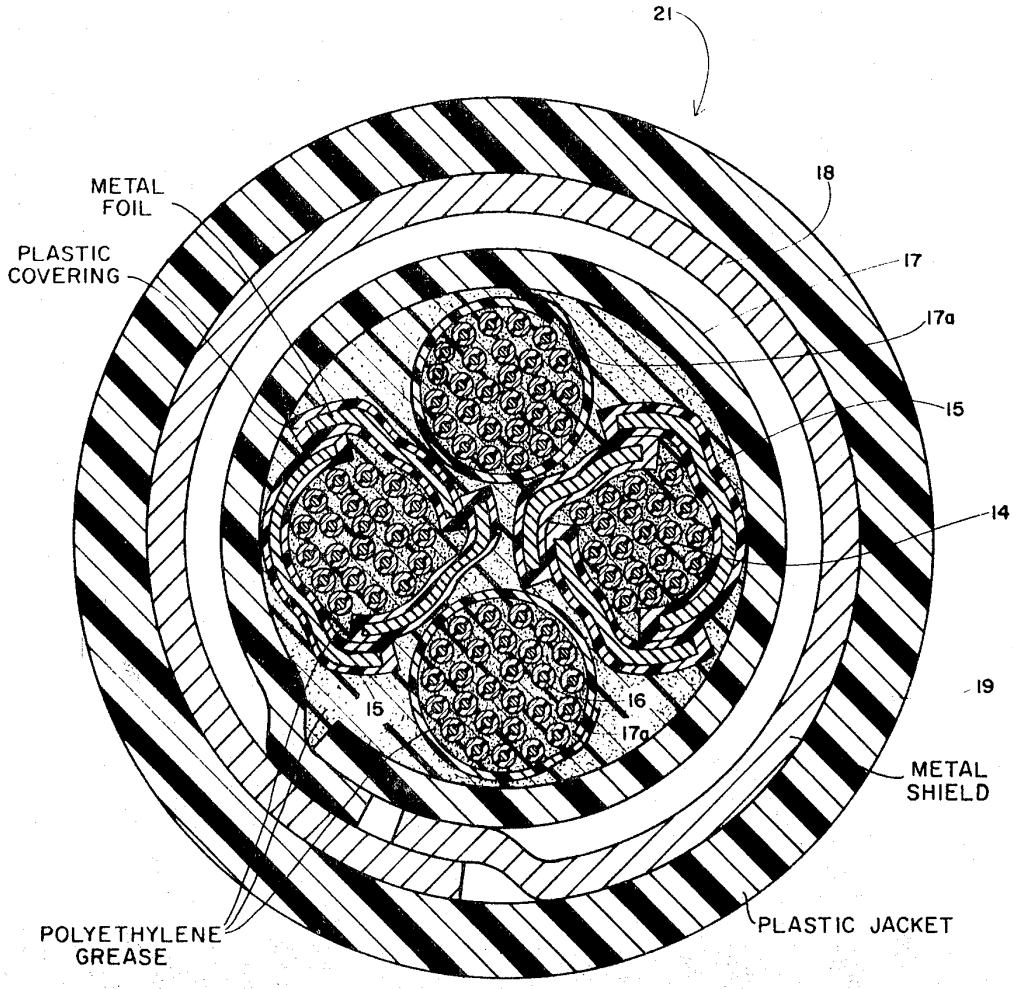

FIG. 16

INVENTORS
WALTER L. ROBERTS
FREDERIC N. WILKENLOH
Roy B. Morris
ATTORNEY

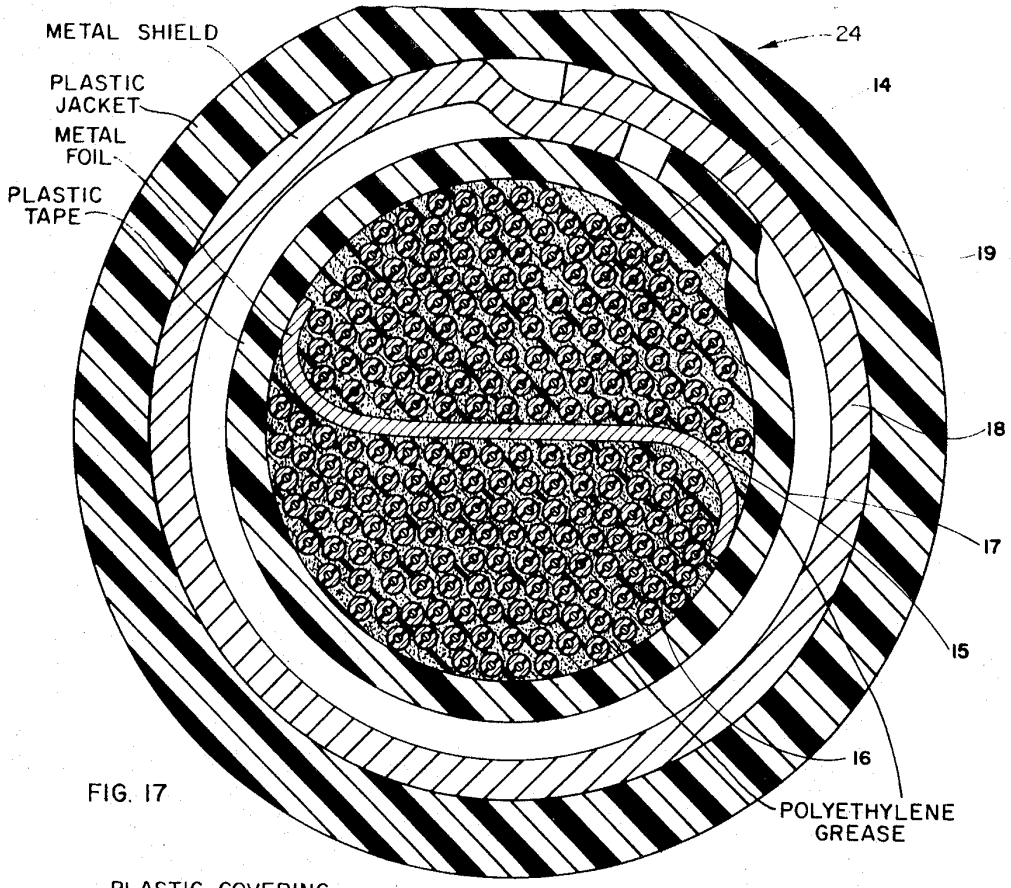

FIG. 17

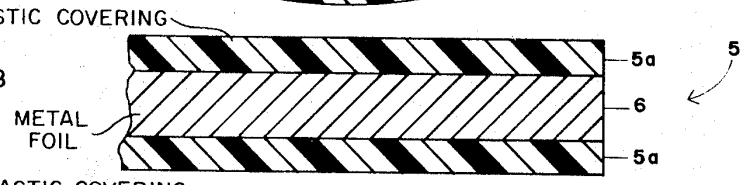

FIG. 18

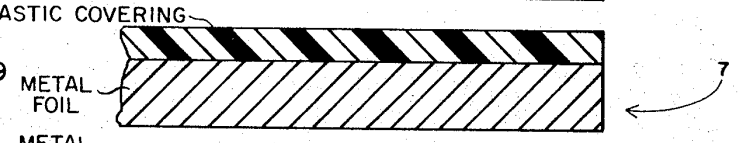

FIG. 19

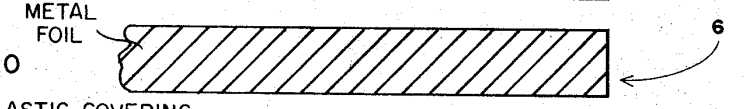

FIG. 20

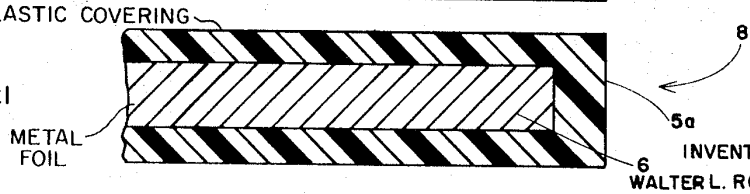

FIG. 21

INVENTORS
WALTER L. ROBERTS
FREDERIC N. WILKENLOH
Roy B. Morris
ATTORNEY

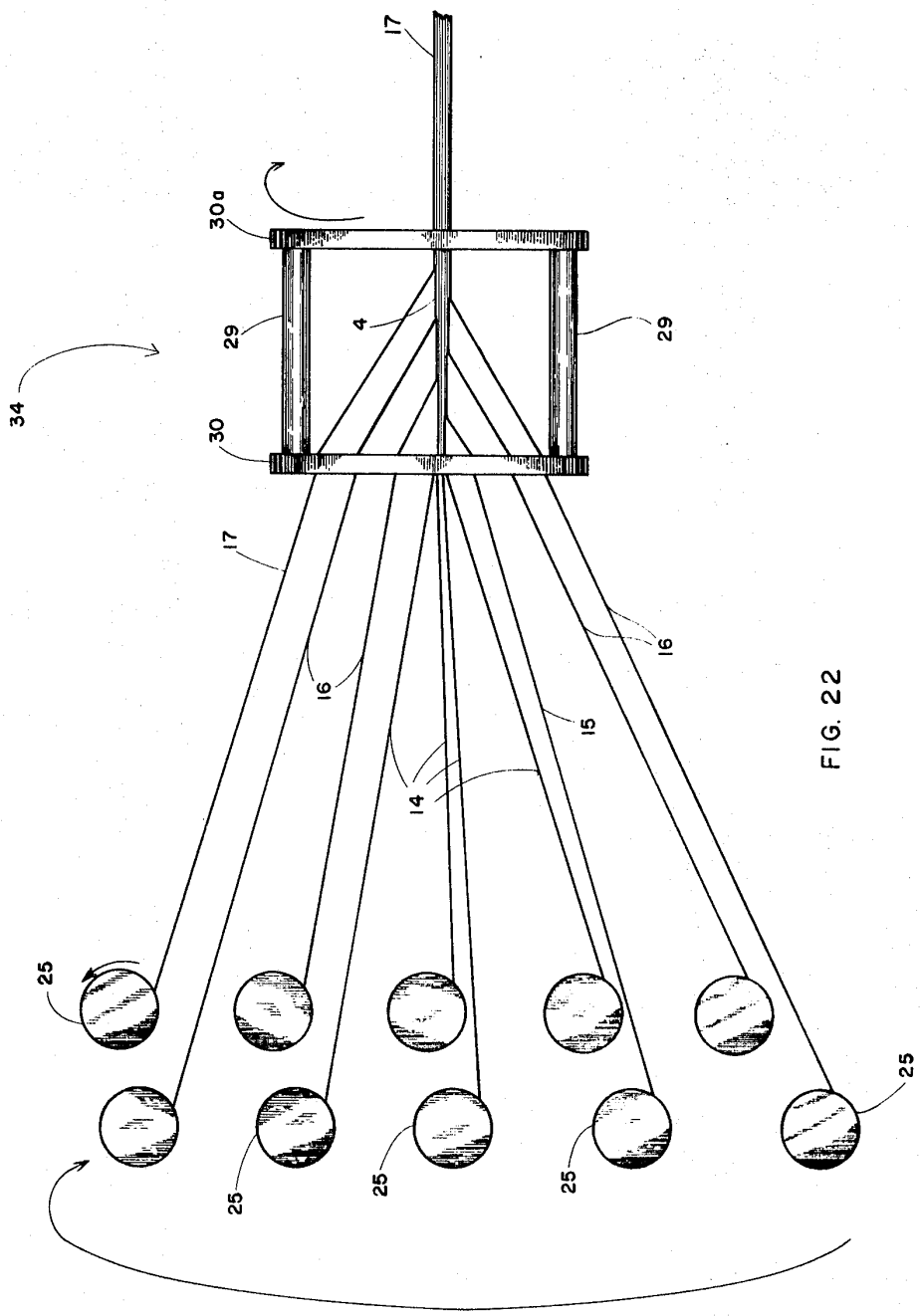

FIG. 22

INVENTORS
WALTER L. ROBERTS
FREDERIC N. WILKENLOH

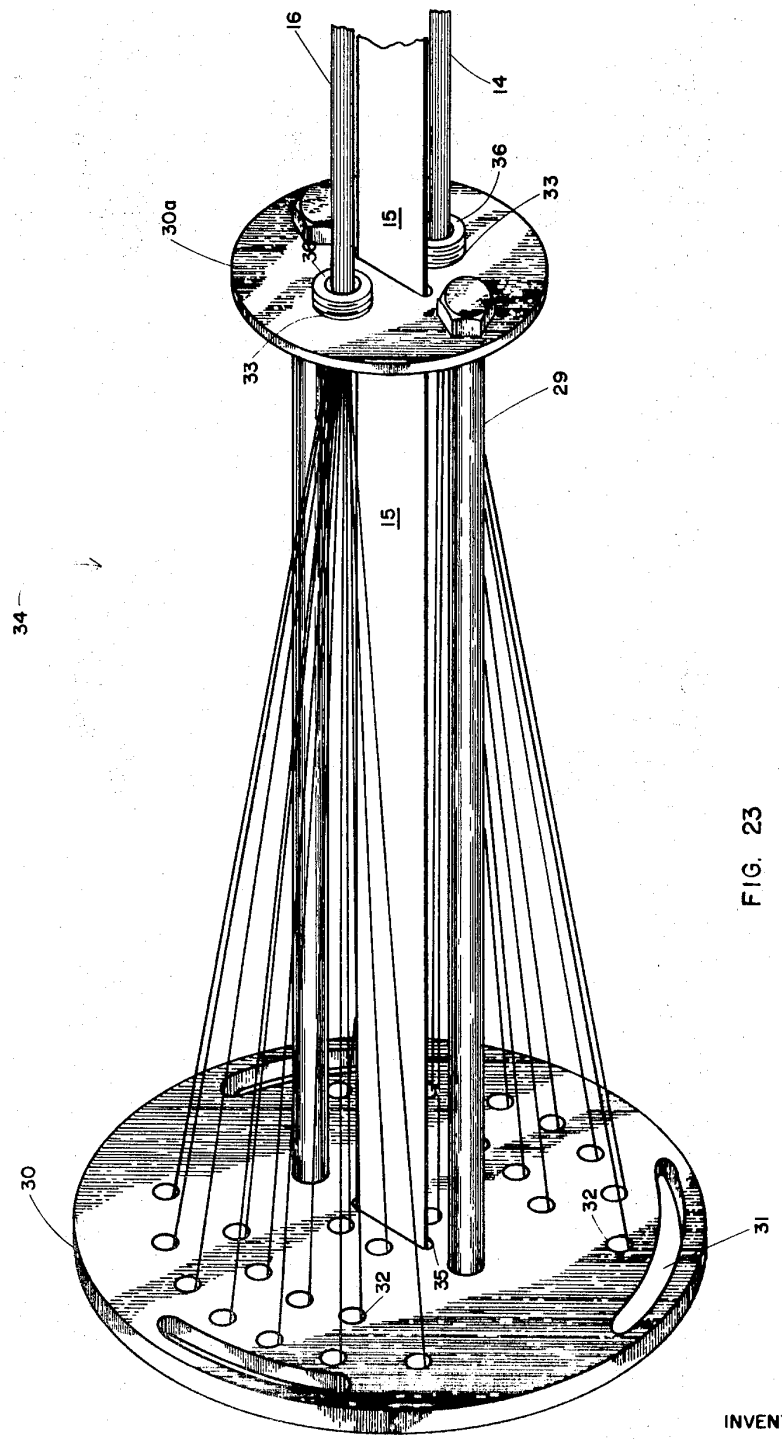

FIG. 23

INVENTORS
WALTER L. ROBERTS
FREDERIC N. WILKENLOH
ATTORNEY

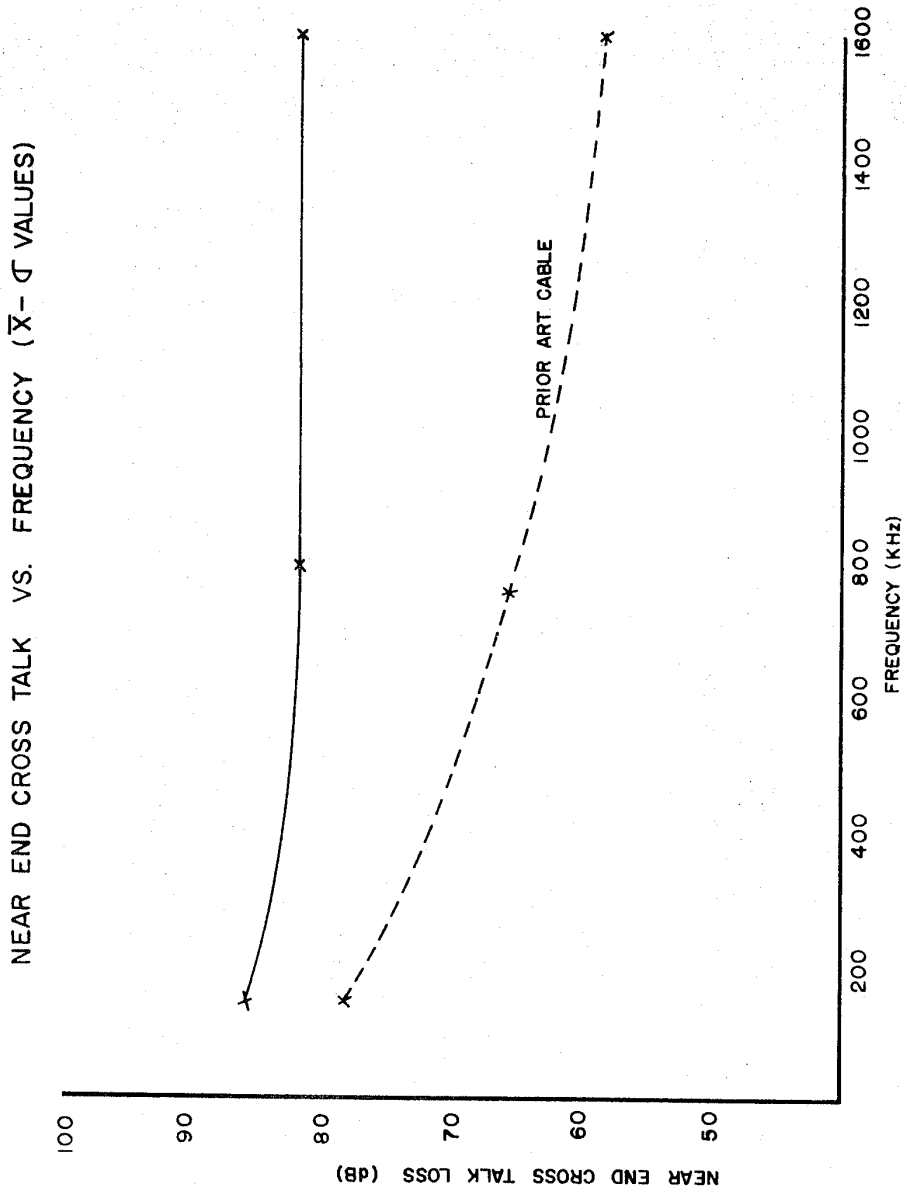

FIG. 24

INVENTORS
WALTER L. ROBERTS
FREDERIC N. WILKENLOH

TELEPHONE CABLE WITH IMPROVED CROSSTALK PROPERTIES

DETAILED DISCLOSURE

This invention relates to multiconductor cables and has particular reference to arrangements for shielding certain of the conductors of such a cable from other conductors of the cable. In order to transmit currents of the same frequency in both directions within the same cable, more particularly when the currents to be transmitted are of carrier frequencies, it is desirable that the conductors used for transmitting in one direction be shielded (electrically) from those transmitting in the opposite direction. Accordingly, it is the purpose of this disclosure, to show how to arrange the conductors of a cable into two concentric groups, with a shield between the two groups of conductors. In such an arrangement of a cable, those conductors on one side of the shield may all be used for transmitting carrier frequencies in one direction, while the returned channels for transmission in the opposite direction will be applied to the conductors on the other side of the shield. The shield has the effect of reducing so called "near end" crosstalk since the weak attenuated currents coming in at a repeater point are in a compartment of the cable electrically shielded from a large amplified current entering the conductors in the other compartment of the cable. The instant invention also envisions and incorporates the concept of two distinct bundles of conductors inside a cable structure, one such bundle being electrically shielded from the other bundles and neither one of the aforesaid bundles necessarily being concentric around the other.

In one embodiment, a cable with a shield is formed by arranging a group of conductors into a cylindrical bundle, spirally wrapping or twisting tapes of aluminum foil, either per se or coated with a plastic such as polyethylene terapthalate (Mylar), upon the cylindrical bundle of insulated wires, and then mounting another group of insulated wires, preferably equal in number, outside of the shielding tape in the form of a concentric cylindrical bundle, upon which another sheath of plastic, or other material, is applied in the usual manner.

The prior art has recognized the same problem to which the instant invention only crosstalk and it is interesting to note that Nyquist, U.S. Pat. No. 1,979,402, (179/78), teaches that the shielding material should be thin tape of soft iron, alternating with layers of copper. Nyquist goes on to teach that while various materials may be used, iron (in particular soft iron) is preferred for one group of the alternating layers. This, according to Nyquist, is so because the product of the permeability by the conductivity of the iron is large, thereby making its attenuating effect large. Furthermore, Nyquist teaches that the ratio of permeability of the iron to its conductivity is quite different from that of the copper or other conductive material, which may be used for the other alternating layers. Such a combination, according to Nyquist, causes electromagnetic wave reflection losses brought about by interfering waves penetrating through the shield. For a sake of completeness and reference, the entire specification of the aforementioned United States patent of Nyquist is incorporated specifically herein by reference.

In passing, it might be well to note that the prior art teaching, concerned with the transmission of carrier energy along telecommunication cable, addresses its shield design solution to the use of alternating layers of different metals, e.g., copper and soft iron. At least one of these two metals is magnetic (soft iron). In contradistinction, the instant invention addressed its solution to the same problem by using alternating layers of a metal and a nonmetal, neither one of which is magnetic. As stated above, the instant invention uses as its shield, an aluminum foil either per se or coated with a plastic, such as polyethylene terapthalate. Furthermore, the prior art teaches that the materials to be used must have electromagnetic properties such that the product of permeability and conductivity should be as large as possible and that the ratio of permeability to conductivity should be as much different as possible from one material to the other. This is not the case in the instant invention where there is used as a shield, an aluminum foil either per se or coated with a plastic.

For the purposes of this disclosure, a foil is defined the same as found on page 18 of the METALS HANDBOOK, Eighth Edition, published by the American Society for Metals, to wit: A foil is a metal in sheet form possessing a thickness of less than 0.006 inches.

The invention will now be more fully understood from the following descriptions, when read in connection with the accompanying drawing,

FIG. 1 of which is a cutaway pictorial view of one embodiment of the instant invention, showing two groups of conductors separated by a longitudinally disposed circumscribing foil shield;

FIG. 2 is a pictorial cutaway view of another embodiment of the instant invention, similar to that shown in FIG. 1, wherein the shield between the two groups of electrical conductors is not longitudinally but helically disposed;

FIG. 3 is an additional pictorial cutaway view of one of the embodiments of the instant invention, showing two groups of electrical conductors separated by a shield made from a plurality of tapes helically disposed, the lateral edges of which overlap adjacently lying tapes;

FIG. 4 is a portion of that cable shown in FIG. 2 in a cutaway view, emphasizing the helical seam formed by the overlapping terminal edges of a helically wound tape shield;

FIG. 5 is a cross-sectional view of a metal foil coated on both sides with a plastic, used to shield one group of electrical conductors from another;

FIG. 6 is a cross-sectional view of an uncoated metal foil shield;

FIG. 7 is a cross-sectional view of an embodiment of a foil tape shield showing a metal foil coated only on one side by a plastic;

FIG. 8 is a cross-sectional view of a piece of metal foil shield having a plastic coating that completely surrounds said foil;

FIG. 9 is a cross-sectional view of that cable structure as shown in FIG. 1, employing as a shield a metal foil coated on both sides with a plastic;

FIG. 10 is a cross-sectional view of that cable structure as shown in FIG. 3, employing a shield composed of a plurality of tapes made from a metal foil coated on both sides with a plastic, the lateral edges of which overlap adjacently disposed tapes;

FIG. 11 is a cross-sectional view of the cable structure as shown in FIG. 1 wherein the metal foil shield is completely surrounded by a plastic coating;

FIG. 12 is a cross-sectional view of that cable structure as shown in FIG. 3, wherein a shield composite is shown, made up of a plurality of metal foil tapes each of which is completely surrounded on both sides by a plastic;

FIG. 13 is a cross-sectional view of a cable structure showing four groups of insulated conductors, only two of which are longitudinally circumscribed by a shield made of metal foil coated on both sides with a plastic and the remaining groups being longitudinally circumscribed by a plastic tape;

FIG. 14 is a cross-sectional view of a cable structure the same as that shown in FIG. 13 except that the plastic coating on the metal foil shield or screen completely surrounds the foil screen;

FIG. 15 is a cross-sectional view of a cable structure the same as that shown in FIG. 14 except that the shield is composed of a plurality of foil tapes, coated on both sides by a plastic, the lateral edges of which overlap adjacently disposed tapes;

FIG. 16 is a cross-sectional view of a cable structure the same as that shown in FIG. 15 except that the plastic coating of the metal foil completely surrounds the foil;

FIG. 17 is a cross-sectional view of a cable structure showing a screen or shield dividing groups of insulated electrical conductors that does not longitudinally circumscribe any group of conductors;

FIG. 18 through 21 inclusive are cross-sectional views of various metal shields used in that cable structure of FIG. 17; FIG. 18 being a metal foil coated on both major surfaces with a plastic; FIG. 19 being a metal foil coated only on one side with a plastic; FIG. 20 being an uncoated metal foil; and FIG. 21 being a metal foil completely surrounded by a plastic coating;

FIG. 22 shows in schematic form, a wire twisting apparatus used to apply the plastic-coated metal foil shield in between first and second groups of electrical conductors;

FIG. 23 is an enlarged diagrammatic view of a rotating die member used to apply the plastic-coated metal foil shield between first and second groups of electrical conductors; and,

FIG. 24 is an exemplary plot of crosstalk values derived from the improved cable structure of the instant invention.

One embodiment of the cable to be considered herein is made up of the usual cylindrical plastic or lead sheath with the conductors arranged in the usual fashion, except that they are separated into two equal or substantially equal but separate concentric groups by means of an essentially cylindrical concentric shield. When a signal is transmitted over any circuit in this cable, it is permissable to consider an electromagnetic field as spreading out from this circuit in the form of a wave motion. This wave reaches other conductors and may induce currents and electromotive forces in other circuits unless they are perfectly balanced. The first of these circuits may be called the disturbing and the other the disturbed circuit. If the disturbing and disturbed circuits are on opposite sides of a shield, it is obvious that the disturbance is reduced due to the attenuation the wave energy undergoes when passing through a shield and such reflections as may occur. This object is achieved in the instant invention by using a piece of metal (copper, aluminum, silver, steel, and etc.) foil, either per se, coated on both sides, coated only on one side, or completely surrounded by a plastic such as polyethylene, polypropylene, or polyethylene terapthalate (Mylar). It is, however, one of the many preferred embodiments of the instant invention to use aluminum foil coated on both sides with a plastic. The reason for this preference is that the instant invention uses the plastic coating of the metal (aluminum) foil as a dielectric to keep unwanted currents [emitting from pinholes in the insulation of individual electrical conductors], from reaching the metallic shield (aluminum foil). It is quite obvious that when a metal foil, coated only on one side, is employed, that the bundle of electrical conductors in nearest proximity therewith is not protected by a dielectric from the electrical conductors, other than that dielectric used as the insulation on the electrical conductors themselves. Thus, there is in this instance a preference for the aluminum foil shield, coated on both sides with the polyethylene terapthalate (Mylar) dielectric.

It is also an embodiment of the instant invention to employ as a shield, a metal foil which is completely surrounded on all sides by a plastic coating, e.g., an aluminum foil, completely surrounded by polyethylene terapthalate (Mylar), polyethylene, polypropolyene, polystyrene or PVC. An aluminum foil, which is coated only on its two major surfaces with a plastic, still has exposed naked aluminum surfaces at the edges thereof. When considering a cable of many miles in length, this amount of exposed conductive metal becomes significant. Therefore, the instant invention takes this into account in one of two ways: the first way is to employ a metal foil which is completely surrounded by plastic. As an example, such a foil would be envisioned as being aluminum with the plastic covering being polyethylene terapthalate (Mylar). Another way to mitigate undesirable electrical properties created by having an exposed surface (edge) of metal to the electrical conductors is to fill that portion of the space created by the plastic-coated metal foil shield not otherwise occupied by the electrical conductors therein with a polyethylene greaselike material. This greaselike material acts as both a dielectric protection, as well as an inhibitor of any subsequent incoming moisture. This particular feature will be more fully discussed later.

Turning now to FIG. 1, the overall general configuration of the cable structure is exhibited by element (1). Shown at (14) is a first group of insulated conductors, the outer peripheral surface thereof being longitudinally circumscribed by a plastic-coated foil shield shown at (15), this foil shield being either uncoated, coated on one or both of its major surfaces as well as completely surrounded by a plastic. Indicated by element (16), is a second group of insulated electrical conductors disposed in an annular fashion on the outermost surface of the plastic-coated metal foil shield (15). Disposed in a longitudinally and circumscribed fashion around the composite formed by the first and second group of insulated electrical conductors (14) and (16) and the interposed metal foil shield (15) is a polyethylene terapthalate (Mylar) tape shown at (17). Longitudinally circumscribing the tape (17) is a corrugated metal armor tape shown at (18). This metal armor, having a thickness greater than a foil, (18), is a tapelike strip that has been longitudinally folded or wrapped around the plastic tape (17). This particular piece of armor is in a sense an electrical, as well as a mechanical, shield and it can have a plastic, such as polyethylene, firmly adhered to either one or more surfaces thereof. Disposed on the outer most surface of metal shield (18) is a molded plastic sheath (19). This outer most plastic sheath is the customary extruded polyethylene that can be and usually is filled with carbon black.

Shown in FIG. 2 is essentially the same cable structure as that set forth in FIG. 1. The overall structure (2) differs from that cable structure (1) only in the respect that the plastic-coated metal foil shield (15) has lateral edges that overlap in a helically rather than a longitudinal fashion. The metal shield (15) of FIG. 1, is longitudinally disposed, the lateral edges of the shield overlapping one another. (See [15*a*])

A further cable structure is shown at (3) in FIG. 3, wherein the difference between structure (3) and (2) being that the shield of element (2) is formed from a plurality of tapes [(15*b*), (15*c*), and (15*d*)] rather than a single tape. The lateral edges of the helically disposed tapes overlap adjacently lying tapes. A representative cross-sectional view of this particular cable structure is shown in FIG. 9.

Element (4) of FIG. 4, is a portion of the helically wound tape, as shown in FIG. 2. Here in this drawing, the low number of turns or helical dispositions per linear length is emphasized. As will be remembered, the tape (15) of FIG. 2 was a single tape, and it was helically disposed around the first group of insulated electrical conductors (14). The lateral edges of this tape (15) overlap, forming the seam (14*e*).

Elements (5), (6), (7), and (8) of FIGS. 5, 6, 7, and 8, respectively, show a cross-sectional view of the particular metal foil tapes, both plastic coated and otherwise, used by the instant invention. Element (5) shows a metal foil (6), coated on both sides with a plastic, whereas element (6) shows an uncoated metal foil shield. Element (7), of FIG. 7, shows a metal foil (6), coated only on one side, with a plastic coating [5 (*a*)]. Either one of the embodiments (5), (6), (7), and (8), shown in respective figures, are viable as a shield from both a structural and electrical standpoint. Foil (6) has a thickness between 1 and 5 mils and is generally twice the thickness of plastic coating [5 (*a*)]. All of elements (5), (6), (7), and (8) of FIGS. 5, 6, 7, 8, as well as 18, 19, 20 and 21, can be corrugated to increase its mechanical strength. For the purposes of this disclosure, when reference is made to a shield, other than element (18), an electrical shield is meant. Even though the word "shield" has an accepted double meaning, i.e. electrical as well as mechanical (armor) protection, the metal foil shield of the instant invention connote primarily an electrical shield.

Element (9) of FIG. 9, shows a cross-sectional view of that cable structure as depicted in FIG. 1. Like numbers of FIG. 1 also represent like elements in FIG. 9. Here it will be noted that the plastic-coated metal foil shield (15) is coated on its two major surfaces with a plastic; however, it can be seen by element (20), that thin strips of uninsulated metal are exposed to the first and second group of electrical conductors (14) and (16) respectively. It is quite obvious that pinholes in the elec-

trical insulation of the insulated electrical conductors (14) or (16), or the shield (15), would allow unwanted electrical energy to reach exposed portions (edges) of the aluminum foil shield, through the edges (20) or pinholes in its plastic coating. From an electrical standpoint, it is desirable to avoid this. It is also electrically desirable to keep moisture away from the electrical conductors. Thus, the instant invention envisions an embodiment in which a polyethylene greaselike material (a flooding compound) is disposed in that cavity created or defined by the foil shield (15) not otherwise occupied by insulated electrical conductors (14). Furthermore, it is also envisioned that the same polyethylene greaselike material can be disposed in that cavity created by the plastic-coated metal foil shield (15) and plastic tape (17) not otherwise occupied by the insulated electrical conductors (16). Such a polyethylene greaselike material is described as an amorphous polyethylene, having an average molecular weight below about 10,000 and a density of below about 0.91, namely [0.851 grams per milliliter at 25° C.]. This grease is marketed by Dow Chemical Company of Midland, Michigan, under the designation of QX-4213.3, and has been tested by the same equipment used to test well-known polyethylenes as defined by ASTM D-1238.65T. Essentially the same method as employed by this ASTM designation was used to test this polyethylene greaselike material, except for slight modifications. One such modification was that the extrusion barrel was heated to 100° C., instead of 125° C., as called for in the aforementioned ASTM Specification. This temperature modification was necessary because of the viscosity of the polyethylene grease material, i.e., it is characteristic of this grease to become highly fluid when exposed to any high degree of heat. The melt index (flow rate) measured using this modified ASTM method was 10 to 20. A 2,160 gram load (piston and weight) was used in this modified ASTM test, as well as an orifice of 0.020 inches. Other data supplied by the Dow Chemical Company on other properties of the polyethylene grease are as follows:

TABLE I.—PROPERTIES OF POLYETHYLENE GREASE GREASE

Property	Condition	Value
Power factor	1 to 100 kc	Less than 5×10^{-5}.
Pour point		Approximately −10° C.
Coefficient of volumetric expansion	25° C	7.3×10^{-4}.
Density	25° C	0.581 gram per milliliter.
Water absorption (percent)	24 hours at 100% RH	0.01%.
Mean specific heat	−40 to 100° C	Less than .53 cal./° C./gm.

By placing the above described polyethylene greaselike material in the two areas indicated, two functions are served. The first function is that of interposing a dielectric between the electrical conductors and the exposed metal edge portion (20); the second function is to exclude water, in any form, i.e., vapor or liquid, from ingressing into that area where the electrical conductors are situated. In essence, the polyethylene greaselike material is a hydrophobic material, as shown by its extraordinary low (less than 0.01 percent) water absorption at 24 hours at 100 percent relative humidity. Thus, by using the polyethylene grease as discussed, water tight cable can be provided. That is to say, the cable using the polyethylene grease as disclosed, can be directly buried in the ground without the benefit of pressurization, and remain in service for an indefinite length of time without the ingressing of water into the area where the electrical conductors are situated.

Element (10) of FIG. 10 shows the overall cross-sectional view of a further embodiment of the instant invention. The basic difference between the cable (10) of FIG. 10 and cable (9) of FIG. 9, is that the plastic-coated foil shield (15) is not a single unitary tape as shown in element (9) of FIG. 9. In this particular embodiment, the shield (15) is made up of a plurality of tapes, the lateral edges of which overlap adjacently disposed like tapes. Elements (15), (15′), and (15″) show this particular feature with the individual plastic-coated metal foil shields having lateral edges in an overlapping relationship with each other. As was the case in element (9) of FIG. 9, this particular plastic-coated metal foil shield is used to separate a first group of insulated electrical conductors (14) from a second group of insulated electrical conductors (16). The balance of the cable structure is essentially the same as that shown by element (9) of FIG. 9. Here again, that innermost cavity defined by the overlapping plurality of plastic-coated metal foil shields (15), (15′), and (15″), not otherwise occupied by insulated electrical conductors (14), can be essentially filled with the same polyethylene grease described in association with the description of element (9) of FIG. 9. Also that cavity defined between outer plastic tape (17) and the plastic-coated metal foil shield (15), (15′), and (15″), not otherwise occupied by insulated electrical conductors (16), can be also filled with the polyethylene greaselike material described above. In element (10) of FIG. 10, as was the case with element (9) of FIG. 9, the exposed metal edges (20) present a problem. Electrical energy escaping through pinholes in the insulation of the electrical conductors into that uninsulated portion of shield (14) and (16) where there is exposed metal foil is electrically undesirable. As was the case with element (9) of FIG. 9, the polyethylene greaselike material can be used here to serve two functions: the first to provide a dielectric interposed between the exposed metal edge (20) and the insulated electrical conductors (16) or (14); and the second to insure the exclusion of water, either in the liquid or vapor state, from that portion of the cable structure where the electrical conductors are disposed.

Element (11) of FIG. 11, shows a cross-sectional view of a further embodiment of the instant invention. The cross-sectional structure of element (11) is essentially the same as element (9) of FIG. 9, except for one specific deviation. It will be noted that in element (9) of FIG. 9, there were exposed metal foil edges (20). Shield (15) of FIG. 11, does not have any metal edges exposed. It will be noted that in FIG. 11, a plastic-coated metal foil shield (15), having a cross-sectional similar to that as shown by shield (8) of FIG. 8, is employed. Thus, by using this particular embodiment, no metal of the plastic foil shield is exposed at any time to any electrical conductor. This is not to say, however, that the polyethylene grease used in the structure of cable (9) or (10) can not also be used here. Either that innermost cavity, not otherwise occupied by insulating conductors (14), defined by plastic-coated metal foil shield (15), or that cavity defined between the plastic-coated metal foil shield (15) and plastic tape (17), not otherwise occupied by electrical conductor (16), or both, can be essentially filled with polyethylene greaselike material as previously discussed. Thus it can be seen that in the case of a cable structure like that of element (11), of FIG. 11, the polyethylene greaselike material serves basically as a water-repellant substance. However, in the case where there are pinholes in both the insulation of the electrical conductors (14) and (16) as well as the plastic-coated metal foil shield (15), the polyethylene greaselike material serves as a dielectric and keeps unwanted electrical energy from being transferred into the shield (15).

Element (12) of FIG. 12 shows a cross-sectional view of a cable structure essentially the same as element (10) of FIG. 10. The only difference between element (12) and that of element (10) of FIG. 10 is that in element (12) a plurality of plastic-coated metal foil shields is used, the plastic-coating of which completely surrounds the metal foil. Generally speaking, a plastic foil completely surrounded by an integral coating of plastic material would be available to a manufacturer in essentially a limited number of tape widths. Therefore, with only a single width availability, such as shown in element (12), a

cable structure configuration can be designed for any size cable core circumference using just one given width of shield tape. Thus, notwithstanding the fact that a plastic-coated metal foil tape comes in only one width and that width is less than the outer peripheral dimension of a core made up of insulated electrical conductors (**14**), a plurality of tapes can be used to circumscribe the core, the lateral edges of the individual tapes overlapping adjacently disposed tapes. As was the case with similar cable structures shown in FIGS. **9**, **10** and **11**, a polyethylene greaselike material can be disposed in the innermost cavity created by overlapping plastic-coated metal foil shield (**15**), (**15'**), (**15''**), not otherwise occupied by electrical conductors (**14**). Also, in combination with this filled core concept, polyethylene grease can be disposed in that space created by the plastic-coated metal foil shields (**15**), (**15'**), (**15''**), and plastic tape (**17**), not otherwise occupied by electrical conductors (**16**). Here again, as was the case in element (**10**) of FIG. **10**, the polyethylene greaselike material has the primary function to exclude water from that space where the electrical conductors are disposed. However, it has a secondary function to provide a dielectric between the source of electrical energy, i.e., the electrical conductors (**14**) and (**16**), and any pinholes or other electrical access to the metal foil of the shields (**15**), (**15'**), and (**15''**).

Shown in FIG. **13**, by element (**22**) is a further embodiment of the instant invention which shows the insulated electrical conductors divided into quad configuration. It is to be understood that like numbers represent like cable components as was shown in previously discussed figures. This exemplary quad is made up of four groups of insulated electrical conductors (**14**) and (**16**). The two groups of insulated conductors shown at (**14**) are longitudinally circumscribed by shield or screen (**15**), which in this particular embodiment is made up of a single tape, the lateral edges of which overlap one another. These particular tapes not only have a width that is equal to or greater than the outer peripheral dimension of the cores made up by the insulated electrical conductors (**14**), but also are made up of a metal foil coated on both sides with a plastic, such as that shown in element (**5**) of FIG. **5**. Making up the balance of the quad configuration are two additional groups of insulated electrical conductors (**16**). These particular insulated electrical conductors are longitudinally circumscribed by a plastic tape (**17***a*) which in this particular embodiment can be made up of the conventional polyethylene terapthalate (Mylar). Transmission of an electrical signal in a given direction is carried on the insulated conductors (**14**). Conversely, transmission of electrical signals in opposite or returning direction, is carried over insulated electrical conductors (**16**).

Polyethylene greaselike material, the same as previously discussed, can be used in this particular embodiment. Here, one has many options as to what particular cavity or combination of cavities that can be filled with the polyethylene grease. Any one or any combination of all of the following cavities can be filled with the polyethylene greaselike material: that cavity defined by the plastic-coated metal foil shield (**15**), not otherwise occupied by insulated electrical conductors (**14**); that cavity defined by plastic tape (**17***a*), not otherwise occupied by insulated electrical conductors (**16**); or that cavity defined by plastic tape (**17**), not otherwise occupied by insulated electrical conductors (**16**), plastic tape (**17***a*), insulated electrical conductors (**14**), and plastic-coated metal foil shield (**15**).

Shown in FIG. **14**, by element (**23**) is another embodiment of the instant invention, which shows insulated electrical conductors divided into a quad configuration. Here again, like numbers represent like cable components as was shown in previously discussed figures. This exemplary quad is made up of four groups of insulated electrical conductors (**14**) and (**16**). The two groups of insulated electrical conductors shown at (**14**) are longitudinally circumscribed by a shield or screen (**15**), which in this particular embodiment is made up of a single tape as was the case in FIG. **13**. This tape has a width that is at least equal to but preferably greater than the outer peripheral dimension of the cores made up by the insulated electrical conductors (**14**), and are made up of a metal foil completely coated on all sides with a plastic, such as that shown by element (**8**) of FIG. **8**. Making up the balance of the quad configuration are two additional groups of insulated electrical conductors (**16**). These particular insulated electrical conductors are longitudinally circumscribed by a plastic tape (**17***a*), which in this particular embodiment can be made up of the conventional polyethylene terapthalate (Mylar). Transmission of an electrical signal in a given direction is carried on the insulated electrical conductors (**14**). Conversely, transmission of electrical signals in an opposite or returning direction, is carried over insulated electrical conductors (**16**).

Polyethylene greaselike material, the same as previously discussed, can be used in this particular embodiment. Here one has many options as to what particular cavity or combination of cavities that can be filled with the polyethylene grease. Any one or any combination of all the following cavities can be filled with the polyethylene greaselike material: that cavity defined by the plastic-coated metal foil shield (**15**), not otherwise occupied by insulated electrical conductors (**14**); that cavity defined by plastic tape (**17***a*), not otherwise occupied by insulated electrical conductors (**16**); or that cavity defined by a plastic tape (**17**), not otherwise occupied by insulated electrical conductors (**16**), plastic tape (**17***a*), insulated electrical conductors (**14**), and plastic-coated metal foil shield (**15**).

Shown in FIG. **15**, by element (**20**) is another embodiment of the instant invention, which shows insulated electrical conductors divided into a quad configuration. Like numbers represent like cable components as was shown in previously discussed figures. This exemplary quad is made up of four groups of insulated electrical conductors (**14**) and (**16**). The two groups of insulated electrical conductors shown at (**14**) are longitudinally circumscribed by a shield or screen (**15**), which in this particular embodiment is made up of a plurality of tapes. These particular tapes have a width that is less than the outer peripheral dimension of the cores made up by the insulated electrical conductors (**14**), and are a metal foil and coated on both sides with a plastic, such as that shown in element (**5**), FIG. **5**. Making up the balance of the quad configuration, are two additional groups of insulated electrical conductors (**16**). These particular insulated electrical conductors are longitudinally circumscribed by a plastic tape (**17***a*), which in this particular embodiment can be made up of the conventional polyethylene terapthalate (Mylar). Transmission of an electrical signal in a given direction is carried on the insulated electrical conductors (**14**). Conversely, transmission of electrical signals in an opposite or returning direction, is carried over insulated electrical conductors (**16**).

Polyethylene greaselike material, the same as previously discussed, can be used in this particular embodiment. Here, one has many options as to what particular cavity or combination of cavities that can be filled with the polyethylene grease, any one or any combination of all of the following cavities can be filled with the polyethylene greaselike material: that cavity defined by the plastic-coated metal foil shield (**15**), not otherwise occupied by insulated electrical conductors (**14**); that cavity defined by plastic tape (**17***a*), not otherwise occupied by insulated electrical conductors (**16**); or that cavity defined by plastic tape (**17**), not otherwise occupied by insulated electrical conductors (**16**), plastic tape (**17***a*), insulated electrical conductors (**14**), and plastic-coated metal foil shield (**15**).

Shown in FIG. **16**, by element (**21**) is another embodiment of the instant invention, which shows insulated electrical conductors divided into a quad configuration. Like numbers represent like cable components as was shown in previously discussed figures. This exemplary quad is made up of four groups of insulated electrical conductors (**14**) and (**16**). The two groups of insulated electrical conductors shown at (**14**) are longitudinally circumscribed by a shield or screen (**15**), which in this particular embodiment is made up of a plurality of tapes. These particular tapes have a width that is less than

the outer peripheral dimension of the cores made up by the insulated electrical conductors (**14**), and are made up of a metal foil completely surrounded on all sides with a plastic such as that shown by element (**8**) of FIG. **8**. Making up the balance of the quad configuration, are two additional groups of insulated electrical conductors (**16**). These particular insulated electrical conductors are longitudinally circumscribed by a plastic tape (**17***a*), which in this particular embodiment can be made up of the conventional polyethylene terapthalate (Mylar). Transmission of an electrical signal in a given direction is carried on the insulated electrical conductors (**14**). Conversely, transmission of electrical signals in an opposite or returning direction, is carried over insulated electrical conductors (**16**).

Polyethylene greaselike material, the same as previously discussed, can be used in this particular embodiment. Here, one has many options as to what particular cavity or combination of cavities that can be filled with the polyethylene grease. Any one or any combination of all of the following cavities can be filled with the aforementioned material: that cavity defined by the plastic-coated metal foil shield (**15**), not otherwise occupied by insulated electrical conductors (**14**); that cavity defined by plastic tape (**17***a*), not otherwise occupied by insulated electrical conductors (**16**); or that cavity defined by a plastic tape (**17**), not otherwise occupied by insulated electrical conductors (**16**), plastic tape (**17***a*), insulated electrical conductors (**14**), and plastic-coated metal foil shield (**15**).

Much of the previous discussion has been centered around the use of a plastic-coated metal foil shield, wherein the plastic coating is one that either completely surrounds the metal foil, or is disposed on the two major surfaces thereof. These particular embodiments were also discussed in combination with using polyethylene greaselike material, the latter to serve primarily as a moisture-prohibiting material, along with an additional function of serving as a dielectric interposed between the electrical insulators and any exposed portion of the metal foil in the shield. This is not to say, however, that a metal foil either per se or coated only on one side with a plastic, cannot be used as a viable shield for the same purposes as achieved by the foil coated on both sides or completely surrounded by a plastic.

Cable structures having similar cross sections as that shown in FIGS. **9** through **16** inclusive can be made using as the shield a foil coated only on one side with plastic. Such an arrangement obviously exposes an uncoated metal foil to the second group of electrical conductors. When a metal foil is thus exposed, it is imperative that the cavity defined either in whole or in part by the uncoated foil, not otherwise occupied by insulated electrical conductors, be essentially filled with the previously discussed polyethylene greaselike material. It is in this particular combination that the polyethylene greaselike material serves the dual function of (a) a water inhibitor and (b) as a dielectric material. This is not to say, however, that that cavity defined either in whole or in part by the plastic-coated surface of the metal foil shield, not otherwise occupied by insulated electrical conductors, can not be filled with the grease. Quite to the contrary, it is often very desirable to so fill this cavity with this material, not withstanding the fact that the grease in this particular combination serves primarily as a water inhibiting means, rather than the dual function of water inhibitor and dielectric.

It is also within the scope of the instant invention to use a metal foil per se as a shield, i.e., uncoated at all on any side by a firmly adhering coating of plastic material. Thus, the cable structures set forth in those embodiments of FIGS. **9** through **16** inclusive can employ in place of the plastic-coated metal foil, a tape of metal foil alone. However, on both sides of this metal foil there must be disposed in that cavity defined either in whole or in part by either one of the surfaces of the metal foil, not otherwise occupied by insulated electrical conductors, polyethylene greaselike material. An embodiment such as this obviously makes maximum usage of the polyethylene greaselike material as a dielectric. As was the case in previous embodiments, this dielectric keeps unwanted electrical energy, emitting from the insulated electrical conductors, from finding its way to the exposed aluminum foil shield. Furthermore, this polyethylene material has the added function of excluding water, either in the vapor or liquid state, from the electrical conductors. In a comparison between plastic-coated foils and a foil per se as a cable shield or screen, the strength or durability added to a metal foil by a firmly adhering plastic coating enables the coated metal foil to withstand more mechanical handling than a metal foil per se. However, the choice as to whether one will use a metal foil per se or a metal foil coated with a plastic in the variously disclosed embodiments is a mere matter of manufacturing choice, so long as the polyethylene greaselike material was used in the appropriate place for its dielectric contribution.

In summary, it can be readily seen that the cable structures shown in FIGS. **9** through **16** inclusive can be modified to incorporate metal foil shields that are coated either on one side only, or are uncoated. Where there is an exposed surface of metal foil to electrical conductors, it is preferred that that cavity defined either in whole or in part by the metal foil per se, otherwise occupied by the electrical conductors, be essentially filled by the previously described polyethylene grease. Thus, shields (**15**), (**15'**) and (**15''**) can be replaced by a metal foil, either per se or coated. This substitution obviously is predicated on the limitation that where there is a major surface of the metal foil exposed to the electrical conductors, the polyethylene greaselike material will be used as described above.

Turning attention to FIGS. **13–16**, collectively, it is also envisioned by the instant invention, a cable structure wherein electrical conductors (**16**) are longitudinally surrounded not by plastic tape (**17***a*), but by the same or similar plastic-coated metal foil tape screen as shown by element (**15**). One can replace plastic tape (**17***a*) with any of the metal foil screen or shield tapes having a cross section like that shown in any of the FIGS. **5–8** inclusive. Of course, where an exposed metal surface is involved, use of polyethylene grease is preferred for the same reasons as previously discussed.

Element (**24**) of FIG. **17**, shows a cross-sectional view of a further embodiment of the instant invention. Here, as is the case with previously disclosed cable structures, there is an outer cable sheath (**19**) longitudinally circumscribing a metal armor shield (**18**) having overlapping edges, which in turn longitudinally circumscribes and has nested therein, a plastic tape (**17**) the longitudinal edges of which also overlap. Nested inside of the plastic tape (**17**) is a plurality of insulated electrical conductors (**14**) and (**16**). This plurality of insulated electrical conductors is divided into essentially two groups by shield (**15**). It is to be noted that this particular shield (**15**) deviates from similar or like shields (**15**) in FIGS. **9** through **16**, in that this particular shield does not circumscribe any one group of insulated electrical conductors (**14**) and (**16**). Specifically, this particular shield is an "S" (serpentine) shaped shield or screen and can be made of either metal foil per se, a metal foil coated on one side with a plastic, a metal foil coated on both sides with a plastic, or a metal foil completely surrounded by a plastic as shown by elements (**5**), (**7**), (**6**), and (**8**) of FIGS. **18**, **19**, **20**, and **21** respectively. Both groups of electrical conductors (**14**) and (**16**) can be encased (filled) with the previously discussed greaselike material. That is to say that that cavity created or defined by plastic tape (**17**) not otherwise occupied by electrical conductors (**16**) and shield (**15**) can be essentially filled with the polyethylene greaselike material discussed earlier. Obviously, many variations and permutations can be used employing the combination of polyethylene greaselike material and particular coated or uncoated metal foil shield. It is suffice to say that where a major surface of a shield is an exposed foil, the insulated electrical conductors facing such metal foil should be encased in the polyethylene greaselike material. However, this is not to imply that where a metal foil shield has a plastic coating on a major surface that

the polyethylene greaselike material is not to be deposited adjacent to that surface. Depending on the economics of a cable manufacturer, the polyethylene greaselike material can be used on either side of that metal foil shield (15) or both sides for that matter, when either a metal foil per se, a metal foil coated on one side, a metal foil coated on both sides, or a metal foil completely surrounded by a plastic is used. Cable structure (24), shown in FIG. 17, possesses the obvious advantage over those structures shown in FIGS. 9 through 16, in that less shield material is used in this manufacture, without the loss of any of the desired electrical properties [mitigation of the near-end crosstalk problem]. FIGS. 18, 19, 20, and 21 indicate the various cross sections of the foil shields that can be used in the primary embodiment of FIG. 17, they being the same as that shown in FIGS. 5, 6, 7, and 8.

FIG. 22 illustrates diagrammatically a method and apparatus (34) for the production of a portion of the cable in the instant invention as illustrated in part by element (4) in FIG. 4. As shown in FIG. 22, a supply of the insulated electrical conductors (14) and (16) is provided for by spools (25). As shown, spools (25) rotate in a manner that feed electrical conductors (16) and (14) through a composite die (34) made up of dieplate (30) and (30*a*) in a spaced apart predetermined manner. Obviously the axis of rotation of spools (25) run into and out of the paper. All of the spools (25) have a further rotation as shown by the large arrow just to the left of the spools. This axis of rotation is one that runs parallel to element (4) and element (17) and it is this rotation that provides the twisting of the insulated electrical conductors in the finished product (4). Surrounded by electrical conductors (16) is foil shield or screen (15). Inside of and longitudinally circumscribed by shield (15) are the electrical conductors (14).

First die member (30) is connected to second die member (30*a*) by cross members (29). Both die members (30) and (30*a*), along with cross members (29) rotate about an axis parallel to element (4) and in the direction shown by the arrow. Thus, the product (4) has a first group of electrical conductors (14) surrounded by a shield or screen (15) disposed in a helical fashion and nested inside of electrical conductors (16), which in turn are helically disposed on the outside surface of the shield (15).

Plastic tape (17) is run through dies (30) and (30 *a*) as shown, to form an outside covering over the composite core (4). The "finished" product, which is composite core (4) surrounded by plastic tape (17), can then be sent through a known apparatus to wrap armor (18) around tape (17) and thence this thus made composite is traversed through an extruder head where plastic sheath (19) is formed. The spools (25) are arranged to feed the conductors, plastic tape, and shield tape through spaced apart holes in a guideplate (30). As illustrated in FIG. 22, guideplate (30) has a center hole or aperture and a plurality of apertures spaced apart generally concentrically around a center hole. The center hole receives the first group of electrical conductors (14) and spaced-apart holes next adjacent to the center holes receives the shield tape (15). Just out by the hole receiving tape (15) is an additional plurality of holes spaced apart from the center hole receiving electrical conductors (16) and the outermost hole in plate (30) receives plastic tape (17). Thus, each conductor, foil shield, and outer plastic tape is located in generally its predetermined position relative to the other conductors in the cable. Obviously, if a flooding compound [polyethylene grease] is desired to be placed in a particular cavity, then provisions for filling such a cavity can be made using this particular apparatus by depositing the grease at the desired location during the twisting operation as shown.

Shown in FIG. 23 by element (34) is a die means adapted to be used in a somewhat similar manner as element (34) of FIG. 22. This particular die means is made up of dieplates (30) and (30*a*), spaced apart by two crossbar means (29). Dieplate (30) has a plurality of holes (31), (32) and (35). Holes (31) are slots which are used to fasten the dieplate (30) to a rotating cage (not shown). Holes (32) are analogous to like holes in dieplate (30) of element (34) of FIG. 22, through which insulated electrical conductors (14) and (16) are traversed. A center slot (35) in die means (30) and (30*a*) is used to pass foil screen or shield tape (15) through both of these plates. Thus, die (30*a*) has essentially two kinds of holes, slot (35) through which shield means (15) passes and holes (33) through which twisted electrical conductors (14) and (16) pass. Insert or guide means (36), made up of wear-resistant fired ceramic material, are inserted inside of holes (13) so as to permit smooth passage of the electrical conductors (14) and (16) therethrough.

The apparatus (34) shown in FIG. 23 is used primarily to manufacture that cable structure as shown by element (24) in FIG. 17. It is to be understood, however, that electrical conductors (14) and (16), along with shield (15) exit from their respective guiding holes in die member (30*a*) in a quasi-twisted manner. As the composite made from elements (14), (15), and (16) is traversed to the right, further twisting takes place due to the rotation of die plate (30) and (30*a*). No twisting or quasi-composite forming is shown in FIG. 23. Such twisting was deleted for the sake of simplicity and clarity. Nonetheless, it is to be understood that due to the rotation of die member (30*a*) and die (30) there is some twisting and therefore composite forming taking place as elements (14), (15), and (16) exit from die plate (30*a*). It is to be further understood that downstream from die plate (30*a*) there is subsequently placed on the twisted composite formed from elements (14), (15), and (16), a plastic tape (17) as shown in FIG. 17. It is also to be understood that the composite formed of elements (14), (15), (16), and (17) is then traversed through a taping machine where metal tape (18) is applied thereto as shown in FIG. 17. This composite is then traversed through an extruder head so as to extrude on the outer peripheral surface of metal armor tape (18) the plastic sheath (19). Obviously, anyone of the tapes shown by elements (5), (7), (6), and (8) of FIGS. 18, 19, 20, and 21 respectively, can be used in the apparatus shown by element (34) of FIG. 23.

It has been previously mentioned that polyethylene greaselike material can be used in the cable structure as shown by element (24) of FIG. 17. When manufacturing grease filled cable on die means (34) of FIG. 23, the polyethylene grease can be placed in any desired position, either on the downstream side of die plate (30*a*) or on the upstream side of such die plate. Generally speaking, it is desirable to allow polyethylene greaselike material to traverse, together with insulated electrical conductors, through ceramic bushing or insert means (36). Such a method of grease application results in an even distribution of the grease throughout the bundle of insulated electrical conductors.

Near end crosstalk loss data in decibels (db.) for various frequencies was measured, both for prior art cables, i.e., cables not employing a shield or screening tape, and a shielded cable structure as envisioned by the instant invention. Such exemplary data is graphically delineated by plotting near end crosstalk loss in decibels (db.) at the frequency (kHz.) at which this loss was measured on the ordinate and abscissa of FIG. 24 respectively. The curve represented by the solid line of FIG. 24 portrays exemplary data taken from cable structures utilizing a screen or shield tape. On the other hand, the dotted line curve, is that plot derived from exemplary data taken from a conventional cable construction. The data actually plotted are average values (x) minus one standard deviation (α). Inasmuch as data gathered at any one particular frequency had a maximum and minimum near end crosstalk loss reading in decibels (db.), these values were averaged and then a standard deviation was subtracted therefrom so as to achieve a value that would be more likely to be representative of a design value for inservice use.

Comparing the data represented by the two curves shown in FIG. 24, it can be seen that at the higher frequencies, the decrease in crosstalk loss is exhibited and generally averages about 6 db. decrease per octave. It will be noted that the values for the dotted line curve decrease as the frequency in-

creases over a substantial range (2 or 3 octaves). On the other hand, it will be noted in comparison that the effective (electrical) thickness of the metal foil screen or shield increases with an increasing frequency. Such a phenomenon might possibly be related to the attenuation or magnetic wave loss of an incident wave passing through an electrical shield at high frequencies where preceding electromagnetic waves are reflected. Such reflection could cause attenuation loss, which would be additive to the expected loss due to the shield per se.

Electrical shielding efficiency of the cable structure disclosed by the instant invention is improved at about the same rate that crosstalk coupling would degrade normal crosstalk performance in otherwise unshielded cables. Such improvements will allow a substantial increase in amplifier (repeater) spacing in systems which employ similar frequencies for both directions of transmissions, e.g. pulse code modulator systems. For example, such pulse code modulated systems operate generally at a frequency of some 172 kHz. At such a frequency, comparing the dotted line with the solid line, there is approximately 15 db. improvement, using the cable structure of the instant invention. Such an improvement would allow a very substantial economic savings in repeater cost in pulse code modulator carrier systems and would in fact achieve about the same crosstalk performance characteristics as would be obtained using separate cables, one such cable transmitting in one direction and the other cable transmitting in an opposite direction. This improved performance is achieved at much less cost.

In summary, the instant disclosure has shown the advantages of dividing a cable core into at least two groups by a metal foil. The two groups thus formed are used for transmission, one group transmitting in one direction and the other group transmitting in an opposite direction. By screening or shielding one transmitting group of insulated electrical conductors, improved nearend crosstalk properties are realized. Because a metal foil screen or shield is used, provisions should be made for preventing unwanted electrical energy, escaping from imperfections in the insulations around electrical conductors, from reaching the metal shield. The instant disclosure has exhibited many embodiments, permutations, and combinations, whereby the metal foil shield or screen is protected by a dielectric material from this unwanted electrical energy. Dielectric protection can take the form of a firmly adhesive plastic coating or it can be a polyethylene greaselike material disposed throughout that cavity either in whole or in part defined by the metal foil screen. Metal foils made of aluminum, copper, steel, platinum or gold can be used; however, aluminum is preferred. By using the concept of a firmly adhering plastic coating on a metal foil, the mechanical properties, i.e., resistance to flexing, bending or mechanical manipulations, can be improved. Nonetheless, a completely uncoated metal foil can be employed, in conjunction with a deposition of polyethylene greaselike material to serve the same purpose as an otherwise coated foil. The use of the polyethylene greaselike material allows a cable to be classified as a direct buried cable, and such a cable structure can be buried in the ground and exposed to the weather elements inherent therein with complete assurance that water, either in the vapor or the liquid state, will be kept from penetrating into the electrical conductors of the cable. Such a cable need not be pressurized (internally) in order to keep out the unwanted water.

From the foregoing, it is believed that the invention may be readily understood by those skilled in the art without further description, it being born in mind that numerous changes may be made in the details disclosed without departing from that invention set fourth in the following claims.

We claim:

1. A cable comprising:

a. a cable core having first and second groups of insulated electrical conductors;

b. a metal foil shield covered on both surfaces with a plastic, said metal foil shield peripherally surrounding said first group of electrical conductors but not said second group of electrical conductors;

c. a plastic tape peripherally surrounding said second group of electrical conductors, but not said first group of electrical conductors, and

d. a plastic sheath circumferentially surrounding said first and second groups of electrical conductors.

2. The cable defined in claim 1, wherein the plastic covering both surfaces of said metal foil shield also covers the longitudinally extending edges of said metal foil shield.

3. A cable as defined in claim 1, wherein a further shield is made of metal and circumferentially surrounds said metal foil shield and said plastic tape.

4. A cable as defined in claim 1, wherein that space not otherwise occupied by insulated electrical conductors inside of said metal foil shield is filled essentially with polyethylene greaselike material, having an average molecular weight below about 10,000 and a density at 25° C. of about 0.85 grams per milliliter.

5. A cable as defined in claim 1, wherein that space circumferentially surrounded by said plastic tape and not otherwise occupied by said second group of insulated electrical conductors is essentially filled by a polyethylene greaselike material, having a molecular weight below about 10,000 and a density of 25° C. of about 0.85 grams per milliliter.

6. A cable as defined in claim 1, wherein an additional plastic tape circumferentially surrounds both said first and second groups of insulated electrical conductors.

7. A cable as defined in claim 6 wherein a further shield is made of metal and circumferentially surrounds said additional plastic tape.

8. A cable as defined in claim 6, wherein a polyethylene greaselike material essentially fills that space circumferentially surrounded by said additional plastic tape and not otherwise occupied and circumferentially surrounded by said metal foil shield and the first mentioned one of said plastic tapes, said polyethylene greaselike material having a molecular weight below about 10,000 and a density at 25° C. of about 0.85 grams per milliliter.

9. A cable as defined in claim 6, wherein that space circumferentially surrounded by said additional plastic tape and not otherwise occupied by said first shield, the first-mentioned one of said plastic tapes, and said first and second groups of electrical conductors is essentially filled by a polyethylene greaselike material, having a molecular weight below about 10,000 and a density at 25° C. of about 0.85 grams per milliliter.

10. A cable comprising:

a. a core made up of a plurality of insulated electrical conductors;

b. a shield circumscribing said core, said shield being made of a metal foil that is coated on both sides by plastic;

c. a second plurality of insulated electrical conductors defining an annular core distributed around the outermost surface of said shield;

d. an integral plastic tube peripherally surrounding the composite of said first and second plurality of electrical conductors and said shield, and

e. a plastic tape circumferentially surrounding said second plurality of electrical conductors.

11. A cable comprising a tubular covering being formed with an inner peripheral surface that delimits a core-receiving cavity, a tubular metallic shield forming a part of said covering, a core made up of a plurality of electrically insulated conductors received in said core-receiving cavity and nested within said tubular metallic shield, and integral metallic crosstalk shield disposed within said core-receiving cavity and extending longitudinally in said core, said crosstalk shield extending between circumferentially spaced-apart regions located on said inner peripheral surface of said tubular covering to separate said conductors into a plurality of longitudinally extending groups, each group being delimited by said crosstalk shield and a portion of said inner peripheral surface, the transverse cross section of said crosstalk shield having first and second terminal portions and an intermediate portion ex-

tending between and integrally joined to said terminal portions, said first and second terminal portions circumferentially extending around portions of the outer periphery of said core and having respective spaced-apart free ends that lie on opposite sides of that plane in which said intermediate portion lies, and said terminal portions being in close proximity with said inner peripheral surface and said metallic tubular shield.

12. The cable defined in claim **11** wherein said terminal portions seat against said inner peripheral surfaces.

13. The cable defined in claim **11** wherein said crosstalk shield has a serpentine-shpaed configuration in transverse cross section.

14. The cable defined in claim **11** wherein said crosstalk shield has an S-shaped configuration in transverse cross section.

15. The cable defined in claim **11** wherein said crosstalk shield is made of metal foil.

16. The cable defined in claim **11** wherein said crosstalk shield is a metal foil coated only on one side with a plastic.

17. The cable defined in claim **11** wherein said crosstalk shield is made of metal foil, and wherein both sides and the longitudinal edges of said crosstalk shield are completely covered with a plastic.

18. The cable defined in claim **11** wherein said crosstalk shield is the crosstalk corsstalk barrier between said groups, and wherein crosstalk shield is formed in transverse cross section only with said first and second terminal portions and said intermediate portion.

19. The cable defined in claim **11** wherein said crosstalk shield is made of nonmagnetic electrically conductive material.

20. The cable defined in claim **19** wherein said crosstalk shield is made of metal foil.

21. The cable defined in claim **19** wherein said metal foil is coated on at least one side with plastic.

22. The cable defined in claim **19** wherein said metal foil is coated on both sides with a plastic.

23. The cable defined in claim **11** wherein the space in said cavity, not otherwise occupied by said conductors and said crosstalk shield, is essentially filled with a greaselike material.

24. The cable defined in claim **23** wherein said crosstalk shield is made of metal foil.

25. The cable defined in claim **11** wherein the space in said cavity, not otherwise occupied by said conductors and said crosstalk shield, is essentially filled with a polyethylene greaselike material having an average molecular weight below about 10,000 and a density at 25° C. of about 0.8 grams per milliliter.

26. The cable defined in claim **11** wherein the width of said crosstalk shield is less than the outer peripheral circumference of said core.

27. The cable defined in claim **26** wherein the space in said cavity, not otherwise occupied by said conductors and said crosstalk shield, is filled with a greaselike material.

28. The cable defined in claim **26** wherein said crosstalk shield has an S-shaped configuration in transverse cross section.

29. The cable defined in claim **26** wherein said tubular covering further includes a plastic tape nested inside of said tubular shield and defining said inner peripheral surface.

30. The cable defined in claim **29** wherein said terminal portions are spaced from said tubular shield only by said plastic tape.

31. The cable defined in claim **30** wherein said terminal portions seat against said inner peripheral surface.

32. The cable defined in claim **29** wherein said crosstalk shield is made of metal foil.

33. The cable defined in claim **32** wherein said foil is nonmagnetic.

34. The cable defined in claim **33** wherein said foil is covered on at least one side with a plastic.

35. The cable defined in claim **33** wherein said foil is covered on both sides with a plastic.

36. The cable defined in claim **29** wherein said tubular covering further includes a tubular plastic sheath, said tubular shield being nested within said tubular plastic sheath.

37. A cable comprising:

a. a cable core having first and second groups of insulated electrical conductors;

b. a metal foil shield peripherally surrounding said first group of electrical conductors but not said second group of electrical conductors;

c. a plastic tape peripherally surrounding said second group of electrical conductors, but not said first group of electrical conductors, and

d. a plastic sheath circumferentially surrounding said first and second groups of electrical conductors.

* * * * *

UNITED STATES PATENT OFFICE

CERTIFICATE OF CORRECTION

Patent No. 3,622,683 Dated November 23, 1971

Inventor(s) Walter L. Roberts and Frederic N. Wilkenioh

It is certified that error appears in the above-identified patent and that said Letters Patent are hereby corrected as shown below:

Column 1, line 37, after "invention: insert -- is addressed,--.

Column 1, line 37 delete "only crosstalk".

Column 2, line 46, change "the" to -- that --.

Column 4, line 46, change "14e" to -- 15e --.

Column 5, line 38, in the title of the table, 2nd occurrence, delete "Grease".

Column 5, line 41, in the third column change "-10^6" to "-10"

Column 6, line 35, change "sectional" to -- section --.

Column 7, line 10, change "the" to -- that --.

Column 12, line 62, change (x) to -- $(\bar{x})$ --.

Claim 18, line 2, before crosstalk, first occurrence, insert -- only -- delete "corsstalk" second occurrence.

Signed and sealed this 9th day of May 1972.

(SEAL)
Attest:

EDWARD M.FLETCHER,JR.
Attesting Officer

ROBERT GOTTSCHALK
Commissioner of Patents

FORM PO-1050 (10-69)

USCOMM-DC 60376-P69
* U.S. GOVERNMENT PRINTING OFFICE : 1969 O—366-334