United States Patent [19]

Simons et al.

[11] **3,911,200**

[45] **Oct. 7, 1975**

[54] **ELECTRICAL CABLE HOUSING ASSEMBLIES**

[75] Inventors: **Herbert D. Simons,** Long Valley, N.J.; **Frank E. Timmons,** Richmond, Ind.

[73] Assignee: **Sun Chemical Corporation,** New York, N.Y.

[22] Filed: **Aug. 20, 1973**

[21] Appl. No.: **389,894**

Related U.S. Application Data

[62] Division of Ser. No. 323,950, Jan. 15, 1973.

[52] **U.S. Cl.** ..... **174/36;** 174/72 R; 174/95

[51] **Int. Cl.**[2] **H01B 7/34**

[58] **Field of Search** .... 29/624, 232; 156/47, 51–54, 156/160, 163, 164, 196, 204, 213, 221, 222, 226, 227, 250, 258, 264, 265; 161/99, 165, 167, 213–219, 221, 222; 138/111, 115, 116, 117; 174/70 R, 72, 68 C, 117 R, 117 F, 117 FF, 119 C, 36, 27, 34, 35 R, 126 CP

[56] **References Cited**

UNITED STATES PATENTS

2,318,367	5/1943	Brigg	174/119 R
2,852,423	9/1958	Bassett, Jr.	174/36 X
3,051,771	8/1962	Lee	174/36
3,622,683	11/1971	Roberts et al.	174/36
3,634,800	1/1972	Fisher	174/119 R

FOREIGN PATENTS OR APPLICATIONS

356,899	9/1931	United Kingdom	174/36
203,527	6/1939	Switzerland	174/36
50,273	2/1932	Norway	174/36
448,551	4/1969	Japan	174/119 R

Primary Examiner—Arthur T. Grimley
Attorney, Agent, or Firm—Cynthia Berlow

[57] **ABSTRACT**

A cable housing assembly for carrying a plurality of conductors comprises a longitudinal multifinned shielding tape wherein each fin comprises a thin elongated flexible foil of material having relatively low electrical resistance characteristics and having each surface thereof bonded to and coextensive with a thin elongated flexible film of material having relatively high electrical resistance insulation characteristics.

3 Claims, 12 Drawing Figures

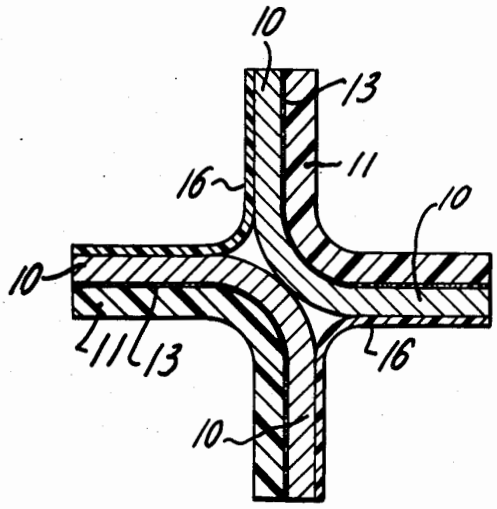

CommScope Exhibit 1012

FIG. 1

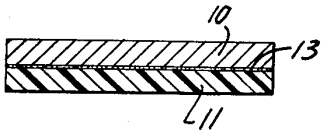

FIG. 2

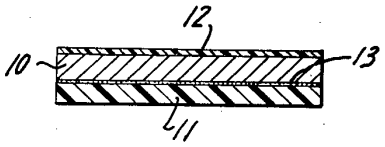

FIG. 3

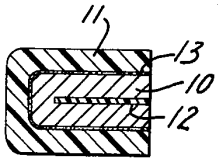

FIG. 4

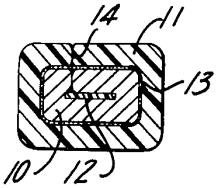

FIG. 5

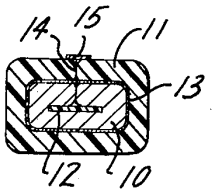

FIG. 6

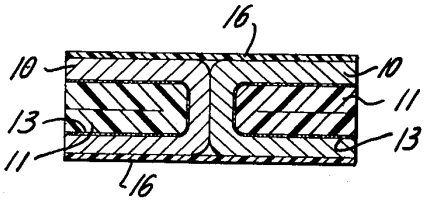

FIG. 7

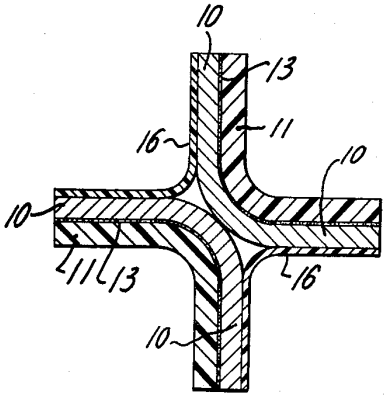

FIG. 8

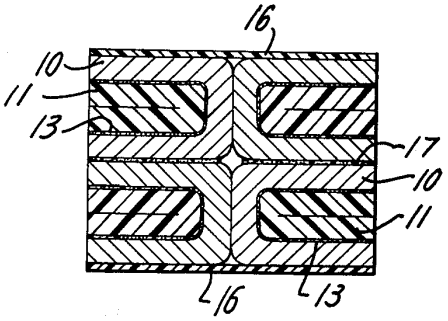

FIG.9

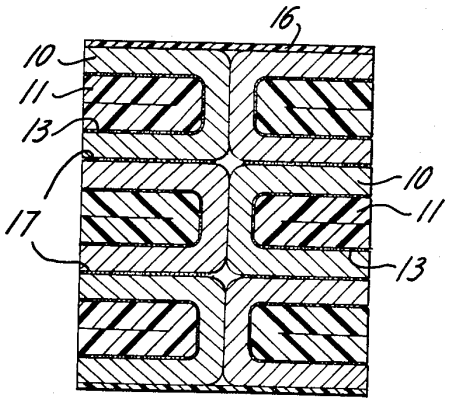

FIG.10

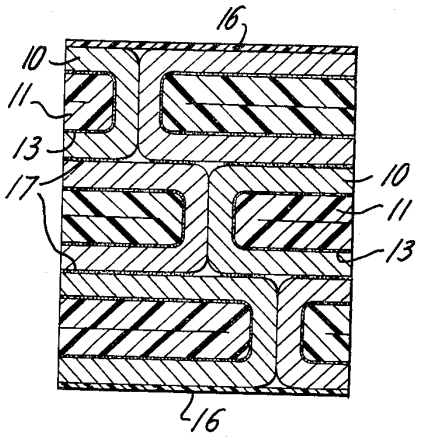

FIG.11

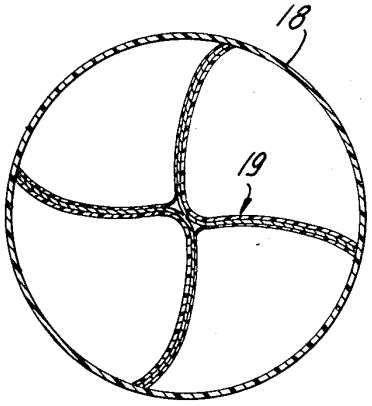

FIG.12

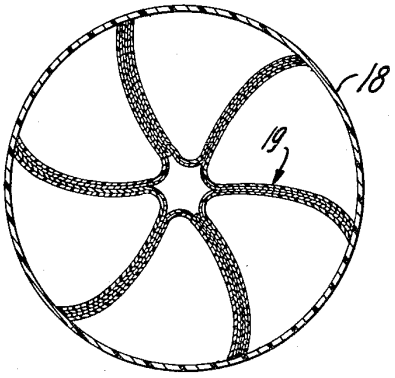

ELECTRICAL CABLE HOUSING ASSEMBLIES

This application is a division of copending application Ser. No. 323,950 (filed Jan. 15, 1973).

This invention relates to multiconductor cables in general and more particularly relates to means for shielding certain of the conductors of a multiconductor cable from other conductors of the cable. It is an improvement over the shielding means disclosed in U.S. Pat. No. 3,622,683 issued Nov. 23, 1971, to W. L. Roberts et al. for Telephone Cable with Improved Crosstalk Properties.

As communications systems grow more complex, it becomes increasingly important to be able to transmit an increasing number of currents within the same cable, for example the transmission of telephone signals, video messages, and two-way data transmission. It is essential that the conductors be isolated electrically and physically from each other within the cable. It is also essential that the overall cable structure be compact, lightweight, and flexible and that the conductors therein be kept free from moisture.

In the communications industry it is common practice to use a floating or grounded shield of aluminum or copper between several sections of cable. This shield is generally by not necessarily totally sealed and moistureproof within an enclosure of plastic insulating film in order to keep the shield free from electrical contact with adjacent insulated conductors and free from damage and/or corrosion by moisture which may enter the cable and track the length of the shield.

The use of one tape to shield one conductor or a pair or a group of conductors from another conductor or pair or group of conductors, permitting simultaneous transmission of two separate currents of the same frequency within the same cable, is known, as in for example U.S. Pat. Nos. 3,032,604 and 3,622,683.

In accordance with the instant invention there is provided a longitudinal shielding tape having a wide variety of embodiments whereby the speed of manufacturing the cable and the shielding efficiency are increased, the volume and space within the cable are better utilized and foil corrosion is minimized.

In general the encapsulated film/foil laminated longitudinal multiconductor cable electrostatic shielding tapes of this invention are prepared by the steps of (A) forming a strip of a laminate of metal foil and plastic film bonded together by any suitable and conventional means with any suitable adhesive, such as a heat-fusible resin, a solvent-release rubber, or a solvent-release plastic base adhesive, and (B) folding the strip (A) upon itself.

The invention will be more fully understood from the following description of the accompanying drawings, in which:

FIG. **1** is a cross-sectional view of a laminate of plastic film and metal foil.

FIG. **2** is a cross-sectional view of a laminate of plastic film and metal foil with a heat-fusible coating on the metal foil.

FIG. **3** is a cross-sectional view of an embodiment of a shielding tape showing the laminate of FIG. **2** folded upon itself with the plastic film on the outside.

FIG. **4** is a cross-sectional view of an embodiment of a shielding tape showing the laminate of FIG. **2** folded upon itself from both edges.

FIG. **5** is a sectional view of an embodiment of a shielding tape showing the folded laminate of FIG. **4** with a strip of plastic film over the fold gap.

FIG. **6** is a cross-sectional view of an embodiment of a shielding tape showing two folded laminates of FIG. **1** with a plastic film on each face.

FIG. **7** is a cross-sectional view of the structure of FIG. **6** wherein the folded laminates of FIG. **1** have opened to form four compartments.

FIGS. **8** and **9** are cross-sectional views of embodiments of a shielding tape showing a plurality of folded laminates of FIG. **1** of equal lengths with a plastic film on the top and the bottom faces.

FIG. **10** is a cross-sectional view of an embodiment of a shielding tape showing a plurality of folded laminates of FIG. **1** of unequal lengths with a plastic film on the top and the bottom faces.

FIG. **11** is a cross-sectional view of a cable structure showing the cable jacket and four longitudinal cable compartments of equal size.

FIg. **12** is a cross-sectional view of a cable structure showing the cable jacket and six longitudinal cable compartments of unequal size.

Now referring to the figures, FIG. **1** illustrates the laminate of a metal foil **10** and a plastic film **11** which is the basis of the shielding tapes of this invention. The metal foil **10** may be any conductive metal normally used in the cable industry such as for example aluminum, copper, tinned copper, steel, silver, or the like.

The plastic film **11** may be any suitable insulation material such as for example a polyolefin, e. g., polyethylene or polypropylene; polyethylene terephthalate (Mylar); tetrafluoroethylene polymer (Teflon); polyvinyl chloride; polystyrene; polyvinylidene fluoride; a polyamide; a polycarbonate; or the like.

The adhesive interface **13** may be any suitable adhesive such as for example a polyolefin, a polyester, polyvinyl chloride, or the like.

Shown in FIG. **2** is essentially the same laminate as shown in FIG. **1** but with a heat-fusible coating (**12**) on the metal foil. The coating may be any suitable material such as for example polyethylene, polyester, polyvinyl chloride, or the like.

The simplest embodiment of this invention is shown in FIG. **3**. This structure is formed by the steps of (1) making a laminate of a metal foil **10** half the thickness required for shielding and a plastic film **11** of the thickness required for insulating the finished tape, (2) applying a heat-fusible coating **12** to the metal foil, (3) cutting the laminate to twice the width required, and (4) folding the laminate upon itself with the coated metal foil on the inside, forming a shielding tape with one folded edge insulated and the core heat-sealed to block moisture.

FIG. **4** shows a second embodiment in which the laminate is folded upon itself from both ends, the edges being butted at fold gap **14** to form a tape that is watertight and thus protected from corrosion, and both edges are insulated.

In FIG. **5** the fold gap **14** is shown covered with a separate piece of insulating film **15** which is laminated thereto by means of any suitable adhesive. The insulating film **15** may be the same as film **11** or different. This further protects the foil edges from corrosion and completely encapsulates the conductive foil in an insulating film.

CommScope Exhibit 1012

Shielding tape systems for longitudinal parallel shielding of insulated wires and wire groups in compartmentalized multiconductor cables are also within the scope of this invention. These are made by the steps of (1) laminating by any known means a metal foil **10** and a plastic film **11**, as in FIG. **1**, (2) slitting the laminate to any desired width, (3) slitting heat-fusible coated plastic film **16** to the same width as the laminate in step (2), (4) folding the laminate from step (2) in half lengthwise plastic-to-plastic, (5) laying two folded laminate tapes from step (4) fold-to-fold and (6) laminating to each of the resulting faces a heat-fusible coated plastic film from step (3) in any known and convenient manner, as in FIG. **6**. The plastic film **16** may be the same as film **11** or different.

The shielding tape from step (5) above is inserted into the ultimate cable by any suitable means, such as by feeding the tape from a pad directly into the cabler with the insulated single conductors or insulated groups. The shielded, compartmentalized multiconductor core can then be further processed, i.e., jacketed, sheathed, etc. As the tape is fed into the cabler it opens as in FIG. **7** to a system having four fins forming four longitudinal parallel shielding compartments, each basically pie-shaped or triangular in shape and having the same cross-sectional areas.

It is within the scope of this invention to vary the type and gauge of the film and/or of the foil. It is also within the scope of this invention to provide longitudinal multicompartmentalized shielding tapes having more than four fins and parallel compartments by varying the number of the folded tapes as in FIGS. **8** and **9** and/or having different cross-sectional areas by varying the size of the folded tapes as in FIG. **10**; in each of the systems illustrated in FIGS. **8**, **9**, and **10**, the folded tapes open at each plastic-to-plastic interface, as shown in FIG. **7**. In such multi layers of folded tapes, the faces of the tapes are laminated metal-to-metal with any suitable adhesive **17**, such as for example solvent-release polyethylene, rubber, polyester, polyvinyl chloride, or the like.

FIG. **11** illustrates an electrical cable comprising an outer jacket or sheath **18** made of an insulating material such as plastic, rubber, or the like, and a four-compartment shielding tape **19**, for example, as shown in FIGS. **6** and **7**.

FIG. **12** illustrates an electrical cable comprising an outer jacket or sheath **18** and a six-compartment shielding tape **19**, for example, as shown in FIG. **10**.

The shielding tapes described herein may be spliced in any suitable manner as long as there is shielding continuity; thus there may be used, for example, an electrical continuity penetration clamp to join the conducting material and a plastic film to join the insulating material.

By shielding a conductor, pairs of conductors, or groups of conductors as described above, maximum utilization of space and material weight is obtained; cable manufacturing speed is increased; the dual-foil encapsulation in several of the embodiments results in increased shielding effectiveness because of foil-interface reflectance; and foil corrosion is minimized in non-filled cable because moisture will not so readily reach the conductive foil.

Although there have been described preferred embodiments of this novel invention, many variations and modifications will now be apparent to those skilled in the art. This invention, therefore, is to be limited not by the specific disclosure herein but only by the appended claims.

What is claimed is:

1. A cable housing assembly for carrying a plurality of cables comprising a jacket of flexible insulating material enclosing a shielding tape comprising in combination (a) a thin elongated flexible film of material having relatively high electrical resistance insulation characteristics and (b) a thin elongated flexible foil of material having relatively low electrical resistance characteristics and having one surface thereof bonded to one surface of said film (a) and being coextensive therewith, said shielding tape being folded along a longitudinally extending crease, thereby to be doubled in thickness, said thin foil (b) having a thin layer of bonding material disposed on the surface thereof which is opposite to its said one surface bonded to said film (a), whereby a foil-to-foil connection is made by said thin layer of bonding material.

2. A cable housing assembly for carrying a plurality of cables comprising a jacket of flexible insulating material enclosing a shielding tape comprising in combination (1) a plurality of folded laminates, each comprising (a) a thin elongated flexible film of material having relatively high electrical resistance insulation characteristics and (b) a thin elongated flexible foil of material having relatively low electrical resistance characteristics and having one surface thereof bonded to one surface of said film (a) and being coextensive therewith, each said laminate being folded along a longitudinally extending crease, thereby to be doubled in thickness and bringing the surface of said film (a) which is opposite its said one surface into contact with itself, whereby the surface of said foil (b) forms outer opposite surfaces of said folded laminate and (2) insulation film layers bonded to and coextensive with both the top and the bottom foil surfaces of said plurality of folded laminates arranged fold-to-fold and foil-to-foil.

3. The cable assembly of claim **1** wherein the film is a plastic and the foil is a metal.

* * * * *