Subscriber Loop Signaling and Transmission Handbook

Analog

Whitham D. Reeve
Reeve Consulting Engineers

A volume in the Telecommunications Handbook Series,
Whitham D. Reeve, *editor*

IEEE PRESS

Reviewed and endorsed by the IEEE Communications Society

The Institute of Electrical and Electronics Engineers, Inc., New York

CommScope Exhibit 1018

IEEE PRESS
445 Hoes Lane
Piscataway, New Jersey 08855-1331

1991 Editorial Board
Leonard Shaw, *Editor in Chief*
William C. Guyker, *Editor, Selected Reprint Series*

J. E. Brittain
S. H. Charap
R. C. Dorf
J. J. Farrell III
L. J. Greenstein
J. D. Irwin
W. K. Jenkins
S. Luryi
E. K. Miller
J. M. F. Moura
J. G. Nagle
J. D. Ryder
A. C. Schell
M. Simaan
M. I. Skolnik
G. S. Smith
Y. Sunahara
R. Welchel
J. W. Woods

Dudley R. Kay, *Executive Editor*
Carrie Briggs, *Administrative Assistant*
Denise Gannon, *Production Supervisor*

IEEE Communications Society
Thomas J. Plevyak, *Liaison to the IEEE Press*

© 1992 by the Institute of Electrical and Electronics Engineers, Inc.
345 East 47th Street, New York, NY 10017-2394

All rights reserved. No part of this book may be reproduced in any form, nor may it be stored in a retrieval system or transmitted in any form, without written permission from the publisher.

Printed in the United States of America

10 9 8 7 6 5 4 3 2 1

ISBN 0-87942-274-2
IEEE Order Number: PC0268-3

Library of Congress Cataloging-in-Publication Data

Reeve, Whitham D.
Subscriber loop signaling and transmission handbook : Analog / Whitham D. Reeve.
p. cm.
Includes bibliographical references and index.
ISBN 0-87942-274-2
1. Telephone switching systems, Electronic. 2. Telecommunication—Standards. I. Title.
TK 6397.R44 1992 91-19685
621.382—dc20 CIP

3

The Outside Plant Facility

This chapter describes the types of physical outside plant facilities that make up the subscriber's loop. Of particular interest are the types and characteristics of cables used in subscriber loop applications. In addition, a description of the premises wiring is provided so the complete physical connection to the terminal equipment can be envisioned.

3.1 Cable Pairs

The main and most important part of a conventional two-wire loop is an outside plant cable pair (two twisted conductors), which provides a bidirectional signaling and transmission path. Some loops, in particular those associated with dedicated or private line circuits, consist of two cable pairs to provide a four-wire circuit with independent transmit and receive pairs. Associated with each cable pair of either the two-wire or four-wire loop are ancillary devices for protection and termination, which are discussed in Chapter 4.

3.2 Exchange Cables

Exchange cables are those cables used for exchange services such as regular subscriber or private line services.* Exchange cables are categorized according to their

* Many times, trunk and exchange services are combined in one cable; however, descriptions of trunk systems are beyond the scope of this book.

 CommScope Exhibit 1018

service classifications as shown in Table 3-1. These classifications are universal. It should be noted that it may be possible to use a given cable type in several classifications. For example, filled cable is normally considered for direct buried applications, but it is also used in aerial and underground service. Exchange cables are considered to have a life of 25 to 35 years.

Table 3-1 Exchange Cable Service Classifications

Class	Application
Indoor	Risers in the central office building
Aerial	Lashed to separate messenger or self-supporting on an above-ground structure
Buried	Buried directly in the earth
Underground	Installed underground in duct or conduit

Depending on the gauge, exchange cables are available in standard pair counts from 6 through 4,200 pairs. When cables up to around 1,200 pairs are manufactured for direct burial and aerial applications, the core may be filled with a jelly- or rubber-like substance to prevent insulation damage and higher attenuation from moisture. Alternately, these cables may be built with an air core and then pressurized after installation with dry air to prevent moisture ingress. All larger cables are pressurized. Moisture in a cable increases its capacitance; the increased capacitance can increase the attenuation as much as 40 percent over dry values.

It is virtually impossible to keep moisture out of unpressurized air-core cables installed in an outdoor environment over a long time period regardless of the service classification. If pressurization is not available, or the cable is relatively small, filled cables provide much better long-term service than unpressurized air-core cables in all service classifications. Contrary to fairly common practice among some companies, unpressurized air-core cables should never be placed underground or directly buried.

3.3 Color Coding

Many pairs are combined together to form a cable. The individual pairs are formed into units, and the units are then assembled or cabled into cores (much like a rope). The basic unit contains 25 pairs which are color coded for identification as shown in Table 3-2. Each conductor has a solid and tracer color, which is opposite to allow identification of tip and ring. For example, the tip conductor of pair 1 has a solid white color with a blue tracer. The ring conductor has a solid blue color with a white tracer. Note, also, the repetitive color code for the tracer every five pairs. When necessary, the basic unit is divided into sub-units of 12 or 13 pairs to attain cable roundness and the desired pair count.

In cables larger than 25 pairs, the units are wrapped with a colored tracer ribbon (unit binder) according to a similar color coding scheme. For example, a 100-pair cable contains 4 units of 25 pairs each. The first unit (pairs 1 through 25) would be wrapped with a binder colored white-blue, the second unit (pairs 26 through 50) would be colored white-orange, and so on. Since there are 25 basic colors in the color code, up to twenty-

five 25 pair units can be identified this way. Only 24 are used, however, which takes care of cables up to 600 pairs. Beyond 600 pairs, "super unit binders" are used. This color code is shown in Table 3-3.

The telephone color code shown in Table 3-2 is not the only one used. For example, the most common station wire, also known as *quad* or *inside/outside* (I/O) wire, consists of four conductors with the color code shown in Table 3-4. Other types of multi-pair station wire will conform to the color code shown in Table 3-2. In addition, various other color codes are used for wiring electronic equipment, some of which may be used in telecommunication systems.

Table 3-2 Telephone Color Code

Pair No.	Color (Tip-Ring)	Pair No.	Color (Tip-Ring)
1	White-Blue	14	Black-Brown
2	White-Orange	15	Black-Slate
3	White-Green		
4	White-Brown	16	Yellow-Blue
5	White-Slate	17	Yellow-Orange
		18	Yellow-Green
6	Red-Blue	19	Yellow-Brown
7	Red-Orange	20	Yellow-Slate
8	Red-Green		
9	Red-Brown	21	Violet-Blue
10	Red-Slate	22	Violet-Orange
		23	Violet-Green
11	Black-Blue	24	Violet-Brown
12	Black-Orange	25	Violet-Slate
13	Black-Green		

Table 3-3 Super Unit Binders

Super Unit	Binder Color
Pairs 1-600	White
Pairs 601-1,200	Red
Pairs 1,201-1,800	Black
Pairs 1,801-2,400	Yellow
Pairs 2,401-3,000	Violet
Pairs 3,001-3,600	Blue
Pairs 3,601-4,200	Orange

Table 3-4 Quad Station Wire Color Code

Pair. No.	Color (Tip-Ring)
1	Green-Red
2	Black-Yellow

Note: The yellow conductor (or yellow and black conductors together) is used as a ground lead when divided ringing is required.

3.4 Insulation

All modern cables use conductors insulated with a polyolefin (plastic) formed by an extrusion process. Older cables use a paper (or pulp) insulation. Polyolefin insulated cable (PIC) is a general term used to describe all modern plastic insulated cables. The actual insulation type may be classified as solid (polyethylene or polypropylene) or expanded foam (dual expanded polyethylene or expanded polyethylene – PVC). Expanded foam cables have found widespread use since about 1980. In many applications, material only costs for expanded foam are less (by about 10 to 15 percent) than solid insulation type cables. Expanded foam cables are always filled.

3.5 Crosstalk

As previously noted, each cable pair consists of two twisted insulated conductors. The twist is used to decrease electromagnetic interference (EMI) due to crosstalk between adjacent pairs in a cable. The twist also helps keep the conductors of the pair balanced with respect to the shield and other pairs. Neighboring pairs in a given 25-pair unit have a different twist length to further reduce crosstalk between them. The twist length (or pitch) is usually left-hand (counter-clockwise), and it varies from 2 to 6 inches. It is optimized to reduce crosstalk at higher frequencies (hundreds of kilohertz) since it is in this region where crosstalk can become a problem.

The requirement for adequate crosstalk performance in all exchange cables is highly stressed during their design and construction. Crosstalk due to cable pair irregularities is managed by tightly controlling capacitance unbalance (pair-to-pair, pair-to-shield and pair-to-ground) and resistance unbalance during the manufacturing process.

3.6 Shielding

All outside plant cables are shielded with corrugated aluminum or copper tape. To increase corrosion resistance, the aluminum is bonded to a thin plastic (copolymer). A corrugated rather than smooth surface is used to increase shield strength and flexibility.

The shield isolates the enclosed conductors from outside sources of electromagnetic interference, such as induction from power line harmonic frequencies. The ability of a shield to isolate the cable pairs from such interference is determined by its shield factor.

Shield factor is a function of the end-to-end shield resistance, the mutual impedance between the shield and cable pairs, frequency and the ground system impedance. Cable shields with a low resistance and low mutual impedance have a higher shield factor. Larger cables have both these features and so offer a better shield factor than smaller cables. Tables are available to simplify the calculation of shield factor for telecommunication cables [1].

The thin aluminum or copper shield used in conventional telecommunication cables does very little to isolate the pairs from power line interference at the fundamental frequency (60 Hz). Since the telephone instrument, and other terminal equipment, is designed to have little response at 60 Hz, this usually is not a problem. The shield is more effective, however, at harmonic frequencies, which are annoying to the subscriber or can cause problems with data transmission.

The shield in a given cable provides almost twice the shielding (induced voltage cut almost in half) at 540 Hz than it does at 60 Hz. Also, a cable with four times the diameter of another cable will provide twice the shielding.

Physically, the shield thickness is generally 0.008 inches (8 mil) for aluminum and 0.005 inches (5 mil) for copper.* Coated aluminum is the preferred shield because it is cheaper and usable in all but the most demanding applications (such as some highly corrosive environments). For reference purposes, a 1,200-pair, 24 gauge, aluminum shielded cable has a shield resistance of around 1 Ω per mile (Ω/mi); a 100-pair, 24 gauge cable has a shield resistance of almost 4 Ω/mi.

The shield is made continuous through splice points, which are found in vaults, manholes, aerial terminals and pedestals, and connected to earth ground at regular intervals (at least four times per mile). Shield continuity and grounding are very important; otherwise, the cable pairs are susceptible not only to noise but to damaging overvoltages during lightning activity, power faults and power system switching transients.

Wrapped between the shield and the cable core of modern exchange cables is a non-hygroscopic dielectric tape, which provides additional insulation to increase the pair-to-shield withstand voltage.

For digital carrier applications, an additional shield is used that separates the cable pairs into two compartments. This is called compartmental core cable, "Z-Screen," "D-Screen" or "T-Screen." The latter indicates the primary application for this type of cable, which is T-carrier. The separation is necessary to eliminate crosstalk between the transmit and receive pairs of the transmission system. The cross-section of a compartmental core cable is illustrated in Fig. 3-1. Compartmental cone cables are frequently installed for analog loops when it is known that the service will be upgraded to digital in the future.

3.7 Armor

In addition to the shield, a steel tape may be used as an armor for increased physical protection and strength. The tape is corrugated and usually 6 mils thick. It is polymer coated to reduce corrosion. Alternately, the properties of both shield and armor can be

* One mil = 0.001 inch or 0.0254 mm.

CommScope Exhibit 1018

combined in a single corrugated tape. A copper/iron alloy (6 mils thick) or extra thick (10 mil) copper is used in this case.

Armored cables find applications in areas infested by gophers, beavers, squirrels or other chewing rodents. Another application for these cables is where they are installed in a severe physical environment such as direct burial in sharp, broken rocks and where bedding sand is not available.

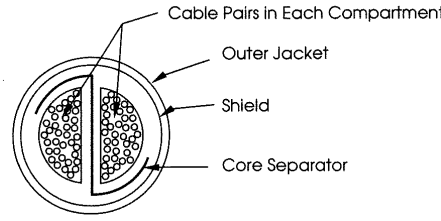

Figure 3-1 Compartmental core cable cross-section

3.8 Outer Jacket

The outer covering (jacket or sheath) on all modern cables is a tough plastic, the thickness of which varies with the size of the cable. It varies from 60 mils for a cable with diameter around 0.75 inches to 110 mils for a cable with approximately 2 inches or larger diameter. The type of plastic varies with the application. A vinyl material is used for riser cables in a central office because it will not support a flame, and its burn products are nontoxic. Low-density, high molecular weight polyethylene (or ethylene copolymer) or high-density polyethylene is used in outside applications.

In aerial applications, the cable is lashed to a supporting messenger, which varies from 3/16 inch to 7/16 inch diameter, depending on the strength required and the material used. In some aerial applications, a self-supporting cable is used. This cable incorporates a supporting messenger along with the outer sheath. Because of its shape, this cable is called *Figure 8*. Due to strength limitations, Figure 8 cable is generally not available in pair counts above 300 pairs (26 gauge), 200 pairs (24 gauge), 100 pairs (22 gauge) or 50 pairs (19 gauge).

Many older cables have a lead sheath that acts as both a shield and outer covering.

3.9 Feeder and Distribution Cables

Referring back to Fig. 1-1 in Chapter 1, feeder cables comprise the loop from the central office to main junction points called a serving area interface (SAI), facility area connector (FAC), cross-connect or control point. The actual name depends on the company, but the function is to provide a point at which feeder cable pairs can be administered and connected to individual distribution cable pairs.

Distribution cables comprise the loop from the main junctions to a distribution terminal such as a pedestal or aerial terminal. In any given area, there are generally more distribution pairs than feeder pairs. This allows efficient use of larger and more expensive feeder cables through easier administration and assignment of subscribers.

Feeder and distribution cables can contain as many as 4,200 pairs (8,400 conductors) or as few as 6 pairs, all within a single sheath. Cables are available with 19, 22, 24 or 26 American Wire Gauge (AWG) copper conductors. The most widely used feeder and distribution cable size is 24 gauge. This is due to economic tradeoffs that take into account the typical loop length.

In the smaller cable sizes, good design practice calls for using cables that are multiples of the basic 25-pair unit (25 and 50). Pair counts of 6, 12, 18 and 37 are avoided unless other factors make their use clearly more economical than 25 or 50 pair sizes. There is very little difference between the installed cost of 6 or 12 and 25 pair cables or 37 and 50 pair cables in most applications.

The extra pairs not only give extra insurance to accommodate unforeseen growth, but they also allow the allocation and use of pairs in the field to be more logical due to the 5-pair and 25-pair color coding scheme. The long-term result, of course, is easier administration and maintenance.

3.10 Service Wires

Service wires make up the final portion of the loop. They are installed between the distribution terminal and the actual serving point or network interface device (for example, at an office building or residential establishment). Beyond the network interface device are premises wiring systems, which are described at the end of this chapter.

Service wires can be one pair up to hundreds or thousands of pairs depending on the establishment to be served. Service wires in the smaller sizes are not always twisted because they are usually short and do not measurably degrade transmission quality. Aerial service wires are usually 18 or 19 gauge, while buried service wires are usually 19, 22 or 24 gauge. High-purity copper is the most widely used conductor material for underground service wires, while copper with special alloying (or other means for strength) is used for aerial service wires.

3.11 Summary of Physical Characteristics

The physical characteristics described above are summarized in Table 3-5 for modern cables. Figure 3-2 illustrates the construction of various cable types. Finally, a matrix and a flow chart are provided in Table 3-6 and Fig. 3-3 that can be used to select the cable characteristics suitable for a particular application.

3.12 Cable Costs

Cable costs vary considerably with gauge, construction and the current cost of copper (and aluminum, if that type of shield is used). Nineteen gauge cable can be twice as expensive as 24 gauge cable for a given pair count. Filled cable is 10 to 25 percent more expensive than air-core cable, depending on the gauge and pair count. Table 3-7 shows a comparison chart with relative material costs for various cable gauges and sizes.

Table 3-5 Exchange Cable Physical Characteristics

Insulation	Polyethylene Polypropylene Dual expanded polyethylene Expanded polyethylene—PVC
Gauge	19, 22, 24, 26 AWG, copper
Pair Count	6, 12, 18, 25, 37, 50, 75, 100, 150, 300, 400, 600, 900, 1,200, 1,500, 1,800, 2,100, 2,400, 2,700, 3,000, 3,600, 4,200[a]
Core	Air or filled
Shield	Bonded aluminum (8 mil), copper (5 or 10 mil) or copper alloy (6 mil)
Armor	Bonded steel (6 mil) when separate from the shield
Sheath	Vinyl, HMW polyethylene, HD polyethylene

[a] Not all pair counts are available with all gauges.

Table 3-6 Exchange Cable Selection Matrix

	Alvyn	PIC	PIC Armored	Self-Supporting	Filled	Air Core
Indoor	√					√
Aerial Normal		√		√	√*	√
Aerial Severe			√	√	√	√
Buried Normal		√			√	
Buried Severe			√		√	
Underground Normal		√			√	√
Underground Severe			√		√	√

*Filled, self-supporting cables are not available.

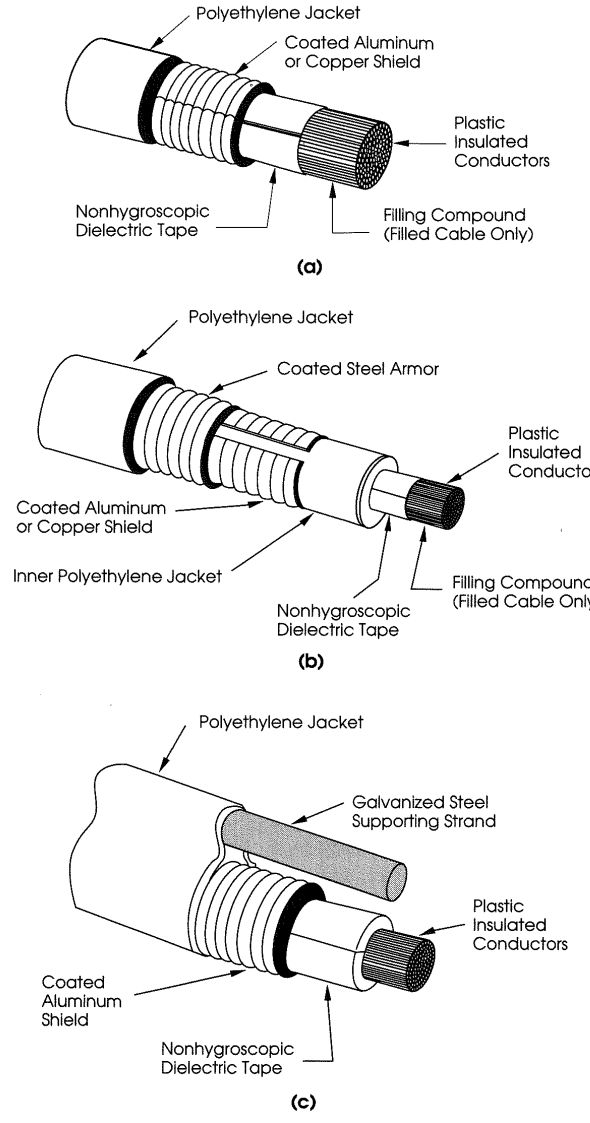

Figure 3-2 Exchange cable constructions: (a) normal duty PIC; (b) severe duty PIC (armored); (c) self-supporting ("Figure 8")

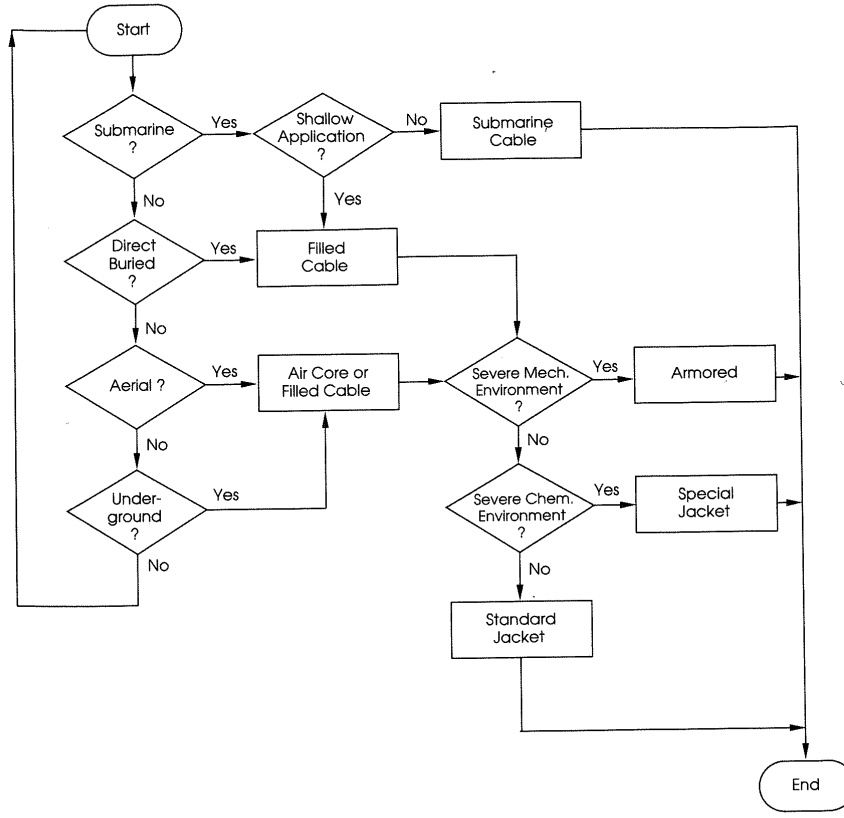

Figure 3-3 Exchange cable selection flow chart

3.13 Voltage and Current Limitations

All cables used in telecommunication applications have voltage and current limitations. The maximum continuous current-carrying capacity of any given conductor gauge depends on many factors such as the ambient temperature, allowable temperature rise, number of conductors in a bundle, and insulation type. Table 3-8 shows the values for various copper conductor gauges, assuming a 25°C ambient temperature and 40°C rise. These are provided to give an idea of the current magnitudes and not as an operating guideline.

The maximum current available from a central office line circuit on a loop is in the range of 130 to 145 mA, although some older systems can supply at least 175 mA. For other signaling and control applications, the telephone company will normally limit the current on loops to 1.3 A, which coordinates with 26 gauge cable. If the loop is connected

to subscriber-owned equipment at both ends, then other restrictions apply as discussed below.

Also shown in Table 3-8, for reference, is the fusing current for each gauge, which is the point at which the conductor will fuse open. These are approximations; actual values depend on many variables. Fusing currents and fusing times are inversely related. For example, if the current is increased by a factor of 3, the fusing time will decrease by a factor of about 1/10.

Table 3-7 Relative Costs of Exchange Cable Gauges and Sizes

	Pairs							
AWG	12	25	50	100	200	400	900	1,200
26	0.72	0.73	0.82	0.78	0.77	0.76	0.77	0.76
24	1.00	1.00	1.00	1.00	1.00	1.00	1.00	1.00
22	1.18	1.21	1.41	1.31	1.43	1.40	1.36	1.37
19	1.94	2.33	2.59	2.59	2.56	2.57	n/a	n/a

Table 3-8 Exchange Cable Pair Currents

AWG	Max. Current Capacity (40° Rise)	Fusing Current (0.1 s)
19	8.0 A	600 A
22	5.0 A	300 A
24	2.0 A	190 A
26	1.3 A	110 A

Telecommunication cables are manufactured for an intended application according to a specification prepared by the cable customer. In many cases, these specifications are generic and are in widespread use throughout a segment of the telecommunication industry.* Generally, the specification includes an insulation breakdown voltage, a high-voltage proof test and insulation resistance. The insulation breakdown voltage (or dielectric strength) is the voltage at which the insulation will fail. It is usually specified in volts per mil of insulation thickness. Typical insulation thickness is around 30 mils, but this is quite variable among cable types and manufacturers. Cable specifications normally only show an insulation breakdown voltage, and the manufacturer then applies enough of the particular material to satisfy the requirement.

The high-voltage proof test is at a somewhat lower voltage than the insulation breakdown voltage. It is the voltage at which cables are tested after manufacture and before shipment to the customer. The actual values depend on the cable gauge, whether filled or air-core, and insulation type. All proof tests are made for 3 s. The cable is not expected to withstand these voltages indefinitely.

* Examples are the REA specifications, which are used by REA and non-REA borrowers alike; and BELLCORE specifications, which are used by the Bell Operating Companies (BOCs).

Insulation resistance is a measure, in megohm-miles (MΩ-mi), of the leakage between a given conductor and the other conductors and shield in the cable. By inspecting the units, it is clear that the insulation resistance can decrease with increasing length. For example, an air core cable 5 mi long will measure at least 2,000 MΩ (10,000 MΩ-mi/5 mi). Insulation resistance tests are usually made at around 550 V for new cables at the factory, or 250 V for installed cables in the field. The higher the measured resistance, the better. Table 3-9 shows the voltage ratings for typical telecommunication cables.

Table 3-9 Exchange Cable Voltage Ratings

Insulation Breakdown Voltage	300-1,200 V/mil
High-Voltage Proof Test (3 s):	
Conductor-Conductor	2-7 kV
Conductor-Shield	10-20 kV
Insulation Resistance (100-550 V):	
Air Core	10,000 MΩ-mi
Filled	1,000 MΩ-mi

Unlike power cables, outside plant telecommunication cables usually do not have a specified maximum working voltage. Nevertheless, most telecommunication cables are considered to have a working voltage of 300 V across the tip and ring of any given pair and between pairs.*

This does not mean the user can arbitrarily apply 300 V to the loop. As expected, FCC Part 68 has certain maximum voltage and current limitations for terminal equipment in various configurations that preclude such operation.† Basically, the terminal equipment cannot apply more than 56.5 Vdc to a loop connected to an off-premises station or supply more than 140 mA to the loop under any circumstances. During ringing, no more than 300 V peak-to-peak can be applied to the loop.†† The reasons for these limitations are obvious: safety and network harm. Some telephone company tariffs may specify more stringent voltage and current limitations.

The voltage and current limitations imposed by the FCC, and discussed in the previous paragraph, on equipment connected to the loop do not apply to the telephone companies. Although the working voltage of cable pairs is considered to be 300 V, telephone companies will use higher voltages under certain conditions. These are always associated with special equipment located outside the central office. For example, the line repeaters in long T-carrier span lines may be powered by up to 360 V at the central office. This voltage dwindles to much lower values along the span line due to voltage drop across the repeaters and resistive voltage drop in the cable pairs.

* The working voltage considered here is root-mean-square (rms) or dc.

† Par. 68.306.

†† 300 V peak-to-peak corresponds to approximately 106 Vrms, assuming a sinusoidal ringing voltage.

3.14 Premises Wiring

Although not directly a part of the outside plant cabling system, and not necessarily considered a part of the subscriber's loop, premises wiring (also called *station wiring* or *inside wiring*) is a natural and necessary extension of it. Therefore, it would be worthwhile to discuss some attributes of these facilities.

Premises wiring is any wiring that interconnects telecommunications equipment on a particular premises. It is not always connected to the network interface device; however, the discussion in this section will be limited to that part of premises wiring connected to the loop through the network interface device and used in conjunction with terminal equipment.

It usually is not subjected to the same environment (electrical or physical) as outside plant cables, but the wiring inside buildings presents another set of problems to be considered by the designer, builder and users of such systems. These are noise performance and fire hazard problems.

Unlike outside plant cables, for economic reasons, premises wiring systems are not always shielded, and this can lead to problems with *electromagnetic interferenc*e (EMI). It should be noted that premises wiring can be a noise source in addition to noise receptor. With short runs, signals on premises wiring normally have negligible effect on other systems. The reverse is also true. On longer runs, however, the lack of shielding can allow transmission degradation through noise pickup, and premises wiring also can act as a transmitting antenna.

Modern premises wiring systems are carrying a much higher percentage of digital transmission (versus analog or voice transmission), and the transmission speeds are steadily increasing. The use of unshielded twisted pair (UTP) rather than shielded twisted pair (STP) for 16 megabit per second (Mbps) data transmission in office buildings is becoming commonplace. Digital transmissions can cause and are subject to crosstalk interference because of their wide frequency spectrums. Such interference problems can be expected to increase unless the spectrums of these signals are coordinated with other uses.

In addition to the transmission problems facing the users of premises wiring systems, the uncontrolled deployment of polyolefin insulated and jacketed cables inside buildings can lead to safety problems even in minor fires or situations where the cable insulation may burn. Flame spread and burn byproducts (toxicity) are of concern in any building installation.

To reduce the safety hazard, the regulations covering premises wiring systems have become progressively tighter with the last few editions of the National Electrical Code (NEC®).* The application or location of a particular part of the premises wiring determines the type of covering required by the NEC®. The coverings are coded as shown in Table 3-10 in descending order of fire resistance rating. Multipurpose cables shown in this table can be used for communication applications as well as other applications. Communications cables and wiring systems covered by the NEC are required to have a minimum voltage rating of 300 V. A more complete discussion on the various cable types used in communications and communication-related applications in buildings was presented in [3].

* See Article 800 [2].

Table 3-10 Premises Wiring Coverings

Cable Type	Covering Type
Multipurpose plenum cable	MPP
Communications plenum cable	CMP
Multipurpose riser cable	MPR
Communications riser cable	CMR
Multipurpose cable	MP
Communications cable	CM
Limited use communications cable	CMX
Undercarpet communications cable	CMUC

The complexity of premises wiring system installations will vary with the application. In simple installations (one, two or as many as four access lines and minimal customer premises equipment), the wiring is almost always arranged in a star pattern as shown in Fig. 3-4. Here the terminal equipment is wired directly to the network interface device. Other arrangements commonly used in simple installations are the "daisy chain" where extensions are multipled (paralleled) with the terminal equipment in the chain preceding it. Standards for simple wiring, such as EIA/TIA 570, are emerging [4].

More complex systems will use a fully engineered premises wiring or premises distribution system (PDS). An example of the architecture of such a system is shown in Fig. 3-5. These are systems of fully integrated components (usually from a single manufacturer) for mechanical and electrical assembly of the wiring from the network interface device to the various terminal equipment.

Premises distribution systems are seldom used with simple installations but are commonplace with private branch exchanges (PBXs) and larger key systems (above around 25 stations), especially when interworking of these devices is required with local area networks (LANs). In this application, the PDS interconnects not only regular telecommunication terminal equipment (telephone instruments, modems, facsimile machines and the like) but also computer and other digital and analog equipment associated with the local area network.

With the integration of digital and analog signal transport for all applications, a considerable cost savings can be achieved not only in the initial installation but in daily administration of the local network.* Premises distribution systems can consist of:

1. Cables with twisted metallic pairs only (STP or UTP)
2. Cables with both twisted metallic pairs and optical fibers
3. Cables with optical fibers only

* Because premises wiring can be very labor intensive, it is imperative, from an economic standpoint, that the designer consider the total telecommunication requirement. The requirements would normally include video, data transmission, security, energy management and telecommunications. The bandwidth required could easily approach 500 MHz or more in more complex situations. It is beyond the scope of this book to discuss wiring systems that would serve these wideband requirements. Standards are being prepared that do address these systems [5,6].

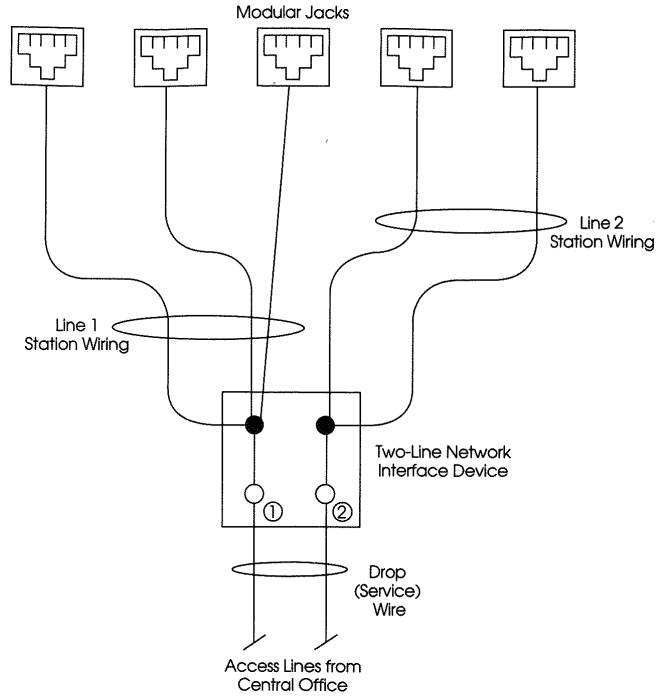

Figure 3-4 Simple premises wiring

4. Coaxial cables
5. Any combination of the above*

In those applications where the PDS interconnects terminal equipment and the loop, a color coding scheme generally is used at interconnection points to indicate the function of the wiring. The terminal blocks used for interconnection (using jumpers) have colored labels and the various cables are marked with color coded tags at each end. There is no universal acceptance of the color scheme used, but a common one is shown in Table 3-11. An explanation of the functions follows. Different PDS manufacturers may have different functions and colors in their product lines.

Central office connections (green) are the cables and terminal blocks associated with the entrance cable from the LEC. House cable terminations (white) are vertical and horizontal cables between the equipment room and telecommunications (satellite) closets or service cabinets within the building. Auxiliary connections (yellow) are cables and terminal blocks that connect to network terminating, signaling and conditioning equipment, paging systems and the like. Information outlets (blue) are cables and connections

* Some manufacturers make cable that incorporates all types into a single integral cable, commonly called Siamese cable.

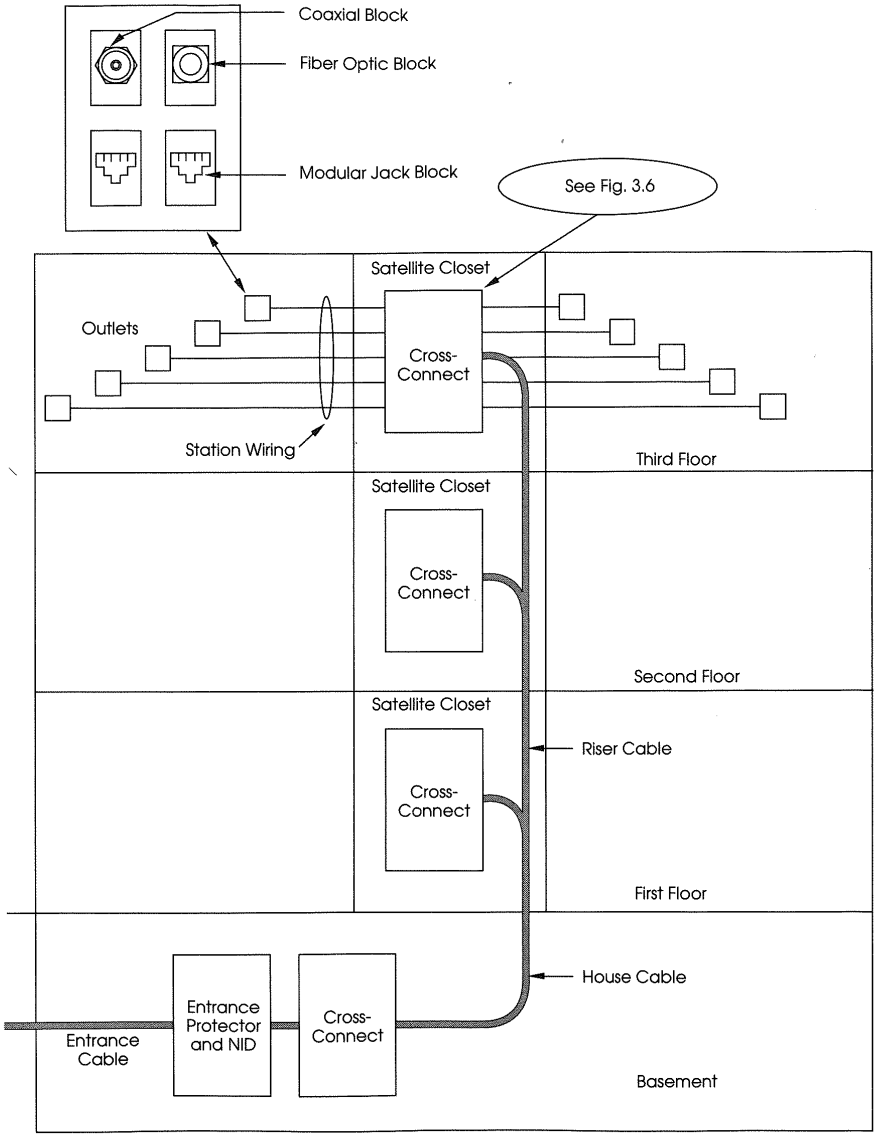

Figure 3-5 Premises distribution system

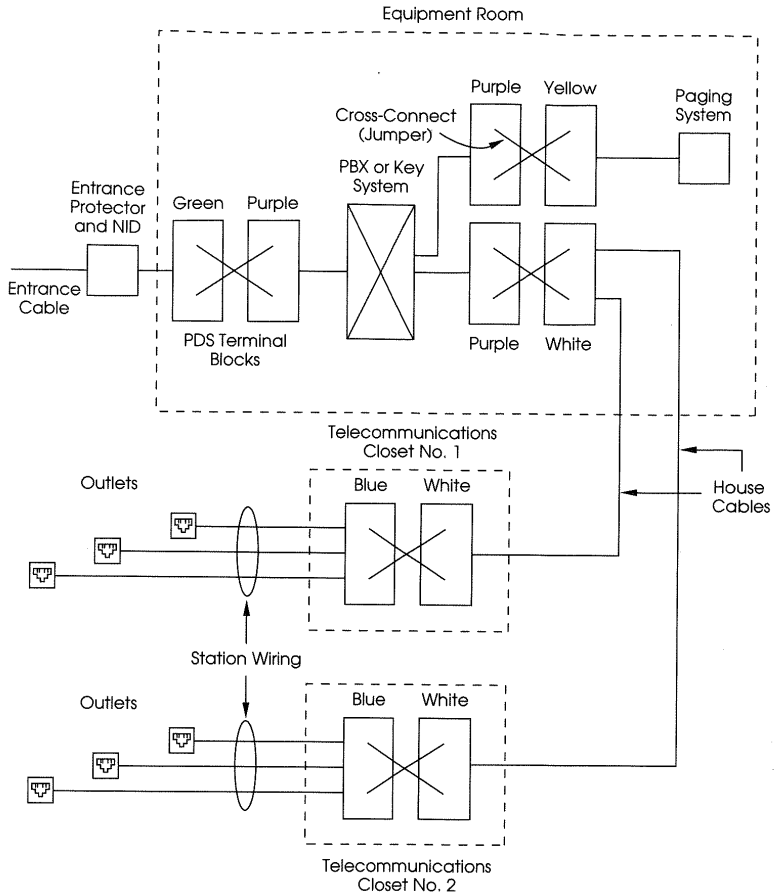

Figure 3-6 Premises distribution system application

from the telecommunications closet or cabinet to the modular connector.* Finally, equipment stations and trunks are the connections from the PBX or key system trunk, line and station circuits. Figure 3-6 shows how the above PDS color code is applied in a typical installation.

* The actual outlet may consist of multiple jacks of different designs for different functions; for example, modular jacks, coaxial connectors and special-purpose connectors.

Table 3-11 Premises Distribution System Color Scheme

Function	Color
Central office connections	Green
House cable terminations	White
Auxiliary connections	Yellow
Information outlets	Blue
Equipment stations and trunks	Purple

REFERENCES

[1] REA TE&CM Section 451.2, "Shield Continuity." Rural Electrification Administration.

[2] *National Electrical Code — 1990*, published by National Fire Protection Association (NFPA).

[3] Kaufman, S., "The 1990 National Electrical Code — Its Impact on the Communications Industry." IAEI News, January/February, 1990, pp. 34-39. Available from International Assoc. of Electrical Inspectors.

[4] EIA/TIA-570, *Residential and Light Commercial Telecommunications Wiring Standard.* Electronic Industries Association.

[5] EIA/TIA-568, *Commercial Building Wiring Standard.* Available from EIA.

[6] EIA/TIA-569, Commercial Building Standard for Telecommunications Pathways and Spaces. Available from EIA.