# United States Patent [19]

**Jachimowicz et al.**

[11] **3,803,340**

[45] **Apr. 9, 1974**


[54] **"D." INTERNAL SHIELD IN TELEPHONE CABLES**


[75] Inventors: **Ludwik Jachimowicz,** Elizabeth; **Jerzy Adam Olszewski,** Edison, both of N.J.

[73] Assignee: **General Cable Corporation,** New York, N.Y.



[22] Filed: **Feb. 23, 1972**

[21] Appl. No.: **228,540**

[52] **U.S. Cl.** ..... **174/36,** 174/105 B, 174/107

[51] **Int. Cl.** ..... **H01b 11/08**

[58] **Field of Search** .. 174/36, 105 R, 105 B, 106 R, 174/103, 113 R, 112, 27, 107



[56] **References Cited**

UNITED STATES PATENTS

| | | | |
|---|---|---|---|
| 3,622,683 | 11/1971 | Roberts | 174/36 |
| 3,031,524 | 4/1962 | Hicks | 174/112 |

FOREIGN PATENTS OR APPLICATIONS

| | | | |
|---|---|---|---|
| 783,310 | 7/1935 | France | 174/36 |
| 36,921 | 9/1930 | France | 174/36 |
| 778,831 | 3/1935 | France | 174/36 |
| 492,333 | 9/1938 | Great Britain | 174/36 |



*Primary Examiner*—Bernard A. Gilheany
*Assistant Examiner*—A. T. Grimley



[57] **ABSTRACT**

A screen of D-shaped cross-section surrounds the conductor pairs of one half of the core of a communication cable to prevent cross-talk between different circuits; and this construction permits the core to be made with two sections, each of semi cylindrical cross-section. A semi circular portion of the D-shaped screen confronts the inside surface of an overall shield of the cable but avoids electrical continuity with this shield to keep lightning that strikes the shield from entering the core of the cable.


**7 Claims, 7 Drawing Figures**

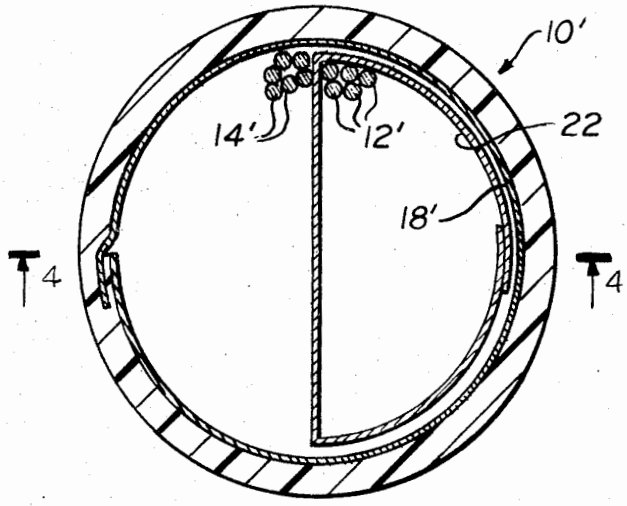





**CommScope Exhibit 1022**

FIG. 1.

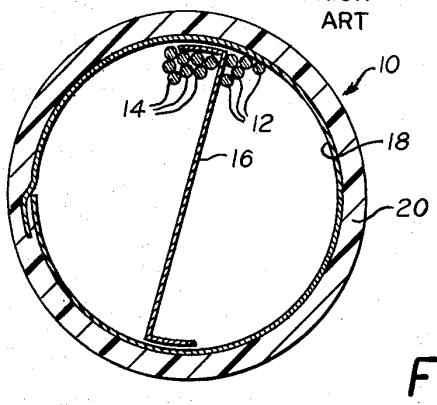


FIG. 3.

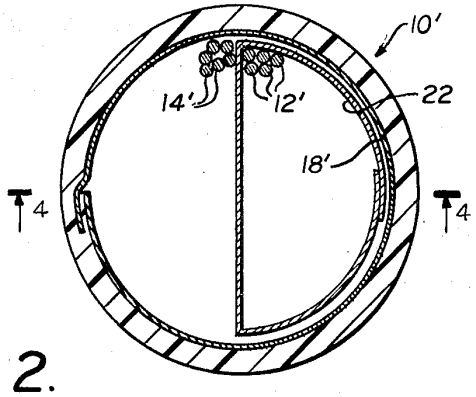


FIG. 2.

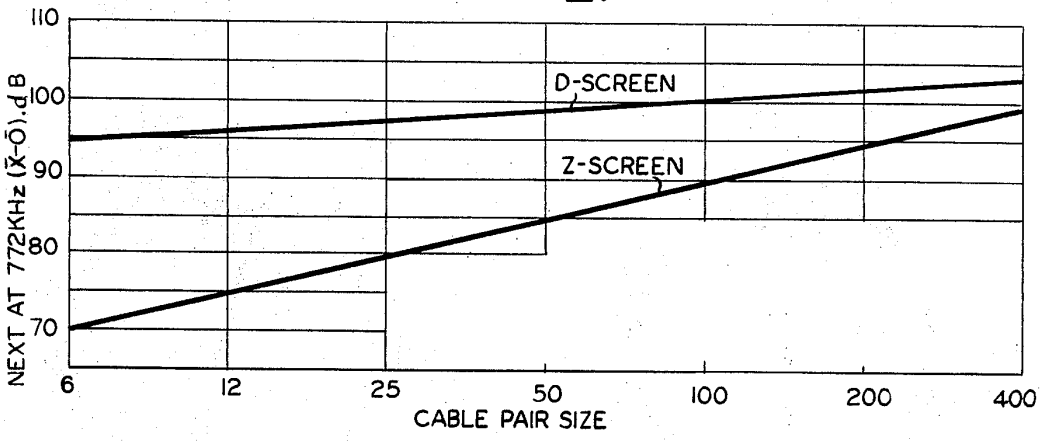


FIG. 5.

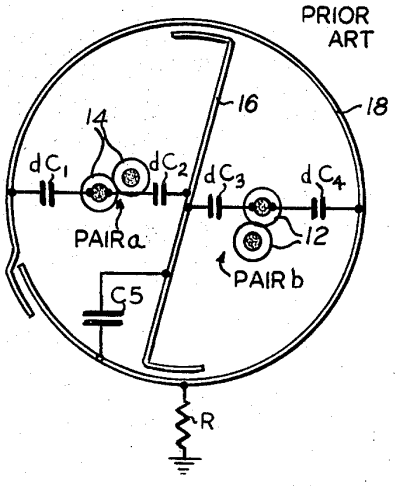


FIG. 4.

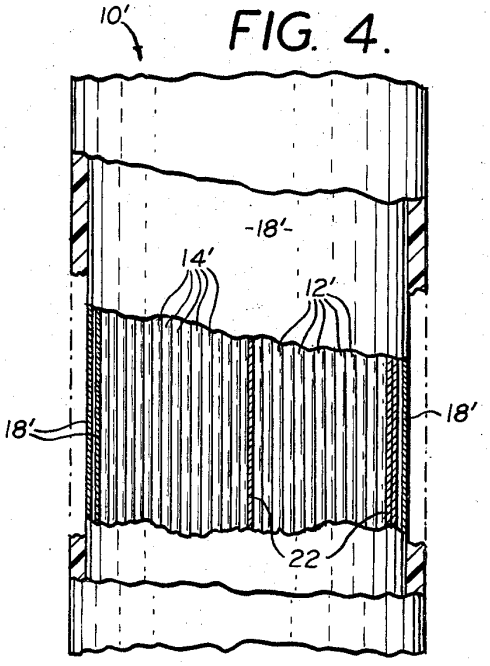

FIG. 6.

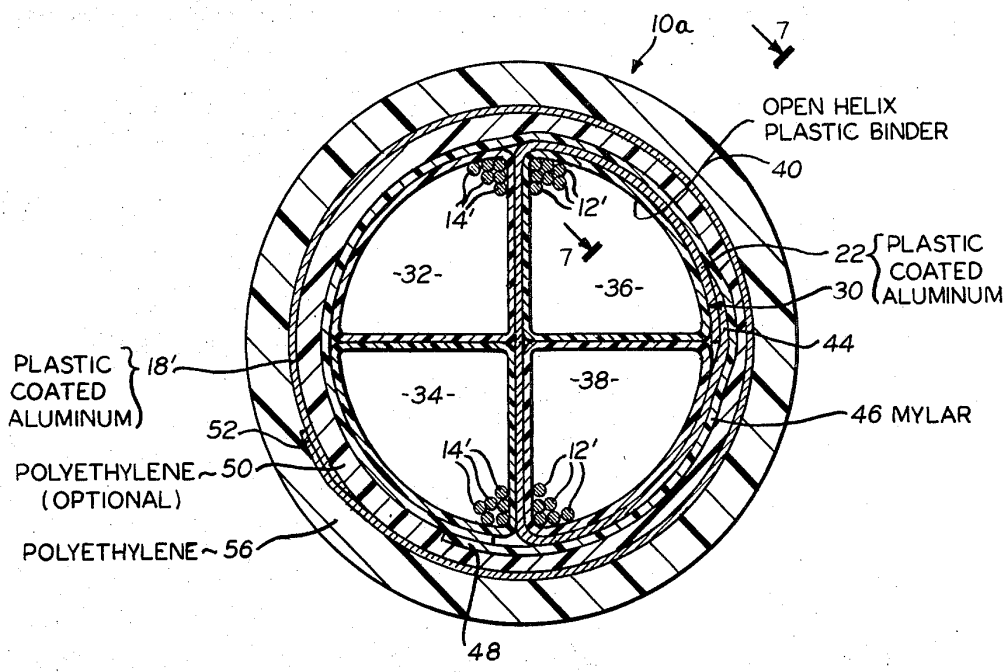
10a
7
OPEN HELIX
PLASTIC BINDER
40
14'
12'
7
22
PLASTIC
COATED
ALUMINUM
30
-32-
-36-
44
PLASTIC
COATED
ALUMINUM
18'
-34-
-38-
46 MYLAR
52
14'
12'
POLYETHYLENE ~ 50
(OPTIONAL)
POLYETHYLENE ~ 56
48

FIG. 7.

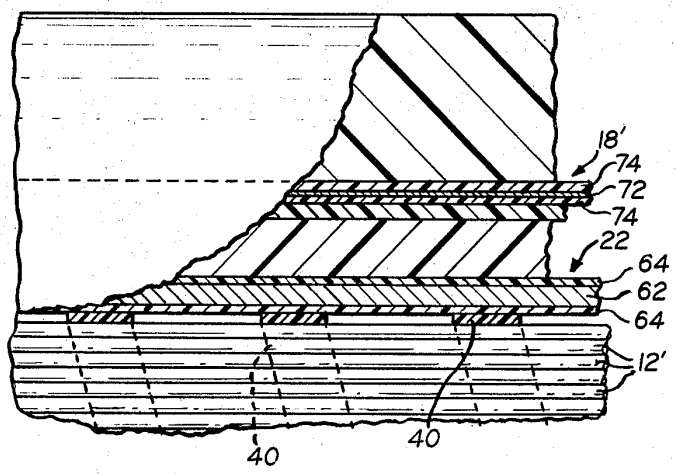
18'
74
72
74
22
64
62
64
12'
40
40

## "D." INTERNAL SHIELD IN TELEPHONE CABLES

### BACKGROUND AND SUMMARY OF THE INVENTION

In the communication (telephone) cables there is always a certain degree of interference between circuits, unavoidable due to proximity of paired circuits. One form of interference called "crosstalk" is the induction of current in the "disturbed" pair by currents flowing in the "disturbing" pair. The "disturbed" pair therefore carries two currents. One, which is the information intended for transmission and the other unwanted induced by neighboring pairs, which superimpose themselves on the transmitted signal reducing the clarity and reliability of transmission.

Various methods were used in the past to reduce crosstalk. One method consists of transposition of conductors by varying lays of pair twist. When this is not sufficient, shielding or screening is employed.

An older and conventional method consisted of shielding, that is applying of metal screen (wrap) over single pairs or group of pairs and then cabling together into a cable core a number of round components each being a round bundle of pairs individually screened. Variation of this method when only one component is shielded, was to assemble a cable core by stranding together first the components to be shielded, applying metal screen (shield) over this group and stranding around this center portion of cable the remaining pairs or bunch of pairs and applying a shield and sheathing overall in concentric fashion.

The advent of pulse code modulation (PCM) in the field of transmission techniques on balanced pairs (potential symmetrical to ground) imposed a particular requirement on shielding. It became necessary to divide the number of pairs in the cable core into two groups of equal number, one group carrying signals in one direction and the other in the opposite direction.

The conventional method of stranding first of one-half of the cable pairs, applying shield and then stranding over it the second half of the cable pairs was not practical, since the present-day cables are made of prestranded units which could not be assembled in symmetrical concentric fashion. The earlier solution consisted therefore of S or Z shaped screen.

The shielding of the cable pairs of this invention includes a screen that separates different groups of pairs in the cable core, but that also extends around approximately one half of the circumference of the core with an outside surface confronting the inside surface of part of an outer metallic shield of the cable. This provides better shielding of the cable, and the construction prevents lighting currents in the outer shield that extends around all of the pairs from entering the core through the screen that surrounds some of the conductors and that separates the conductor into different groups, as will be explained in connection with the drawing which forms a part hereof. For purpose of this specification, the electrically-conducting "screen" that separates different groups of pairs is to be considered a part of the "core" of the cable. Other objects, features and advantages of the invention will appear or be pointed out as the description proceeds.



### BRIEF DESCRIPTION OF DRAWING

In the drawing, forming a part hereof, in which like reference characters indicate corresponding parts in all the views:

FIG. **1** is a diagrammatic cross-sectional view showing the prior art on which the present invention is an improvement;

FIG. **2** is a diagram comparing results obtained with this invention and those obtained with the prior art;

FIG. **3** is a diagrammatic view, similar to FIG. **1**, but showing the inner core shielding of this invention;

FIG. **4** is a fragmentary diagrammatic view, partly broken away and in section on a plane along the diameter of the cable shown in FIG. **3**;

FIG. **5** is a diagrammatic sectional view, showing the electrical transmission paths of the prior art shielding of FIG. **1**;

FIG. **6** is a sectional view showing a communication cable equipped with the "D" screen shielding shown diagrammatically in FIG. **3**; and

FIG. **7** is a greatly enlarged, fragmentary sectional view taken on the line **7—7** of FIG. **6**.

### DESCRIPTION OF PREFERRED EMBODIMENT

FIG. **1** shows a communication cable **10** in which insulated conductors **12** on one side of the cable are separated from similar insulated conductors **14** on the other side of the cable by a Z-Screen **16** which divides the cable core in half. This screen is continuous in the direction of the length of the cable. All of the conductors **12** and **14** are surrounded by a cable shield **18.**

When the cable shown in FIG. **1** is in use, pairs of the bunch of conductors **12** induce currents in the shield **18** and also in the Z-Screen **16.** These potentials are picked up through unbalances by the pairs of conductors **14** resulting in cross talk currents in these circuits. The communication cable shown in FIG. **1** has a conventional outer jacket **20.**

FIG. **3** shows a cable **10'** which is similar to the cable shown in FIG. **1** except that the conductors **12'** are completely surrounded by a screen **22** which has the configuration of a capital letter D. With this D-shaped screen **22,** which encloses one half of the conductor pairs of the cable, there is not direct transfer of the cross talk energy from the bunch of conductor pairs **12'** enclosed in the compartment provided by the shield **22** to the common shield **18'** which surrounds all of the conductors **12'** and **14'**.

The objectionable results obtained with the prior art cable shown in FIG. **1** are illustrated diagrammatically in FIG. **5.** For given unbalances of a pair "*a*," to cable shield **18** is $dC_1$ and to the shield **18** is $dC_2$. A pair "*b*" in the second bunch of conductors **14** has respective unbalances $dC_4$ and $dC_3$. The internal screen **16** is coupled to the overall shield **18** by capacitance $C_5$. The shield has resistance to the remote ground R, which normally is low, on the order of a few ohms.

Pair "*a*" induces voltage in the overall shield **18** through unbalance $dC_1$, this voltage is transferred to the pair "*b*" through unbalance $dC_4$. However, since the shield **18** is grounded through low resistance R, the voltage acting on the unbalance is as reasonably low as it can be made by using cables with shields.

Another path of cross talk is through the screen **16** separating two halves of the cable. The unbalance $dC_2$ induces voltage in the screen **16** which in turn induces



CommScope Exhibit 1022

voltage in the pair "*b*" through $dC_3$. There is no direct grounding of the screen **16**, there is only capacitance coupling of the screen **16** to the overall shield **18** through capacitance $C_5$. Therefore, potential of the screen **16** is much higher than the potential of the cable shield.

With this invention the potential of the screen in the cable is collapsed to the level of the voltage of the shield as close as practical without providing metallic contact between the two. Such metallic contact would not be tolerable since lightning currents appearing in the shield should not be allowed to enter the cable core. There must be a high voltage barrier between the cable core and the cable shield to prevent lightning currents in the shield from entering the cable core.

The collapse of voltage between the screen **22** (FIG. 3) and the shield **18'** is obtained by having the screen **22** D shaped with a large surface providing strong capacitive coupling between the D screen **22** and the shield **18'**. In practice, this improved screening manifests itself very significantly, especially in the small pair count cables, as shown in FIG. **2.** This graph shows that for a six pair cable the average minus standard deviation at 772 kHz near-end cross talk (NEXT) coupling loss across the screen was **70** dB (decibels) for a Z-shaped screen while in the D screen cable it was found to be 95 dB. The difference naturally decreases with increased pair count as the result of the shielding effects of other pairs. For 100 pairs, the differenece drops from a 25dB improvement to 10 dB.

FIG. **6** is a sectional view through an example of a communications cable made with the D screen shown diagrammatically in FIG. **3.** In FIG. **6** a cable **10***a* includes a core **30** made up of four segments **32, 34, 36** and **38.** The quadrants **36** and **34** include the conductors **14'**; and the quadrants **36** and **38** include the conductors **12'**. The group of conductors **12'** are shown surrounded by one or more lengths of colored plastic **40** wrapped loosely around the group of conductors **12'** as open helixes. The loose wrapping of plastic **40** provides color coding while still leaving the group of conductors free to assume a quadrant cross section or any other shape imposed by forming dies through which the different groups of conductors pass. This plastic **40** can be made of various materials and preferably is made of polypropylene of about 5 mils in thickness.

Although the cable shown in FIG. **6** has four quandrants, cables can be made with any number of groups of pairs bundled together for convenient assembly each shaped as necessary to form a cable core.

The core quandrants **36** and **38** are housed in the D screen **22** which is made of plastic coated aluminum or other suitable material. Copper can be used.

The D screen **22** is preferably made by folding a tape longitudinally around the core quandrants **36** and **38** with a lap seam **44** having an overlap of approximately one-fourth inch. The D screen **22** can also be made by wrapping core tape around the core quadrants **36** and **38** in a helix with the convolutions of the helix overlapping one another. When the D screen **22** is made of aluminum, the aluminum used is preferably 4 mils thick or less; and it is preferably coated with plastic partly to protect the aluminum from corrosion and partly to prevent the edges of the aluminum at the lap seam from damaging the insulation of adjacent conductors **12'**.

The core quadrants **32** and **34** are made by binding their conductor pairs together with plastic binding tape **40,** in the same way as the core quadrants **36** and **38.** The entire core is then enclosed in a nonhygroscopic plastic such as polyethylene terephthalate (Mylar). This non hygroscopic shield **46** provides a heat barrier for protecting the insulated conductors of the core from heat during subsequent manufacturing steps of the cable. On small cables a thickness of 3 mils is sufficient for the shield **46,** but on larger cables this thickness is increased, but such heat barriers are well known in the cable art.

Laminates of Mylar and GRS and other polyesters can be used for the shield **46.** Thicknesses up to 16 mils have been used on large cables for better heat protection. The shield **46** is preferably formed by folding a tape longitudinally around the core and with a lap seam **48** which is usually not sealed.

An inner jacket **50,** (optional) preferably of polyethylene, is applied over the shield **46** and the metal shield **18'** is applied over the inner jacket **50** with a lap seam **52.** This shield **18'** can be made of aluminum, preferably coated with plastic as in the case of the D shield **22;** and can also be made of copper or other suitable shielding material. The seam **52** is generally sealed, particularly if the metal of the shield is coated and the coating fuses at temperatures lower than the extrusion temperature to which the shield **18'** is exposed when applying the outer jacket to the cable. For small cables the shield **18'** is made from flat tape but for larger cables a corrugated shield is used to impart better flexibility to the cable.

An outer jacket **56** is extruded over the shield **18'**. This outer jacket may be made of polyethylene; or if fire resistance is necessary, can be made of polyvinyl chloride.

FIG. **6** shows the application of the D screen **22** to a communications cable which is otherwise generally conventional in construction.

FIG. **7** shows the cable of FIG. **6** on a larger scale so that the plastic coatings on the screen **22** and shield **18'** can be illustrated.

In FIG. **7** the D screen **22** is shown with a metal, preferably aluminum center lamination **62** and with plastic coating **64** on both the top and bottom surfaces of the metal **62.** This coating **64** extends around the edges of the metal **62** or at least around the inner edge which faces pair circuit so as to prevent the metal from damaging insulation of the core, and cause low voltage rating between pair circuits and D screen as previously explained.

The shield **18'** is shown with a metal lamination **72** covered on both its upper and lower surfaces by plastic coating **74.** Such shielding tapes are of conventional construction.

With the new and unique configuration of the screen **22** of this invention, a superior communication cable is obtained with outstanding advantages in reducing cross talk.

An additional advantage of the D screen of this invention is that the D screen can be extended at cable terminations. With the Z-shaped screen, when the outer sheathing of the cable is removed for cable splicing, the Z-shaped screen is cut off also and the bunches of conductors in the compartments on opposite sides of the Z screen are brought to their respective repeater housings. Substantial cross talk occurs between those bunches which are not shielded from one another where they come to their repeater housings. With the

D shaped screen of this invention, one bundle of wires does not have to be removed from the D shaped enveloping screen. The whole package, the bundle and the screen, can be conveniently brought to the repeater housing with the result that the bundle of conductors in the D screen is effectively shielded and cross talk is prevented from taking place between the two halves of the cable end from which the outside cable shielding has been removed for cable termination or splicing.

In actual practice, the cross segments about which the D shield is folded when making the cable are not as perfectly formed in cross section as indicated in the drawings of this specification. The cross section of the D screen is often distorted, therefore, so that it is not the outline of a D. There may be corresponding distortions in the shield **18'** which is applied over the D screen, but if there are not, the differences in capacitance between the semi cylindrical portion of the D screen and the confronting inside face of the shield **18'** do not affect the principle of operation of this invention.

The preferred embodiments of the invention have been illustrated and described, but changes and modifications can be made and some features can be used in different combinations without departing from the invention as defined in the claims.

What is claimed is:

**1.** A communication cable including a core containing a plurality of conductors divided into different groups along a generally diametrical plane through the core, an internal screen which is an electrical conductor and which surrounds one of the groups and constituting part of the core of the cable, an electrical conductive shield circumferentially surrounding the entire core and located entirely outside of said core including both groups of conductors and said internal screen, most of the outside of the internal screen confronting the inside surface of the shield and being adjacent thereto for increasing the capacitance between the internal screen and the shield with resulting reduction in cross talk between conductors in the different groups in the core, but the confronting surfaces of the screen and shield being spaced from one another throughout their entire extent so as to maintain a barrier between the cable core and the cable shield to prevent lightning currents in the shield from entering the core.

**2.** The communication cable described in claim **1** characterized by the cable core being of substantially circular cross section and the internal screen of substantially D shaped cross section with the curved part of the D shape generally semi circular and confronting a corresponding portion of the inside surface of the shield.

**3.** The communication cable described in claim **2** characterized by the D screen extending around only the group of conductors that it encloses and being continuous around said group of conductors that it encloses, the shield being continuous around the core, and a circumferentially continuous outer plastic jacket that covers the shield.

**4.** The communication cable described in claim **2** characterized by the D screen being a longitudinally folded metal strip with a lap seam extending lengthwise thereof.

**5.** A communication cable including a core containing a plurality of conductors, an overall metal shield enclosing the core, said core including an internal metal screen for eliminating cross talk between groups of conductors of the core, said screen including a wall that extends generally diametrically of the core and between said groups of conductors and that reaches to the outside surface of the core at angularly spaced locations around said outside surface, the screen extending around said outside surface from both of said locations in converging directions and around the portion of the outside of the core which lies between said locations, the portion of the screen around the surface of the core confronting a corresponding portion of the overall shield and being close to but out of contact with the overall shield for increasing the capacitance between the inner screen and the overall shield without transmitting inductive currents to conductors on the other side of said wall in the region of the circumference of the core on said other side of the wall.

**6.** A shielded communication cable comprising a generally cylindrical core having a plurality of conductors divided diametrically into different bundles, a screen in the core dividing bundles of the core from one another, the screen completely enclosing one of the bundles and having a generally diametrical portion and a portion that forms a part of the circumference of the core, and a shield surrounding the entire core and having a portion of its circumference confronting the portion of the screen that forms a part of the circumference of the core to provide a capacitance effect that decreases the voltage induced in the screen by current flowing in conductors that are adjacent to the screen, the shield having space between it and the core around the entire circumference thereof, and plastic dielectric material in the space for insulating lightning currents in the shield from the core.

**7.** The communication cable described in claim **6** characterized by the different bundles being color coded by some of the plastic material wrapped around each bundle in a loosely applied helix with a fast lay so that successive convolutions of the helix are spaced from one another.

* * * * *


CommScope Exhibit 1022