Consommation et Corporations Canada
Consumer and Corporate Affairs Canada

Bureau des brevets
Patent Office

Ottawa, Canada
K1A 0C9

(21) (A1) 2,058,046
(22) 1991/12/18
(43) 1992/08/22

5,040,7/25

(51) INTL.CL.[5] H01B-011/04

(19) (CA) **APPLICATION FOR CANADIAN PATENT** (12)

(54) Manufacture of Telecommunications Cable

(72) Tessier, Ronald - Canada ;
Mcgettigan, Philip A. - Canada ;
Kish, Paul P. - Canada ;

(73) Same as inventor

(30) (US) 658,727 1991/02/21

(57) 7 Claims

Notice: The specification contained herein as filed

Canada

CCA 3254 (10-89) 41

MANUFACTURE OF TELECOMMUNICATIONS CABLE

Abstract of the Disclosure

A telecommunications cable in which pairs of twisted together conductors are spaced apart to minimize capacitance unbalance and cross-talk. A central core member may be provided with the conductor pairs extending around the core member which may have spokes to separate the conductor pairs. Alternatively, the cable jacket has inwardly directed spacers which separate the conductor pins and hold them in recesses defined by the jacket.

MANUFACTURE OF TELECOMMUNICATIONS CABLE

This invention relates to telecommunications cable.

Telecommunications cable is normally constructed with a core comprising one or more core units, each having a multiplicity of twisted units of conductors, each unit conventionally being a twisted pair of conductors. A core may be formed as a single core unit of twisted pairs. Care is taken, so far as is practicable, to ensure that pairs of equal or similar twist lays are separated from each other by other pairs. The reason for this arrangement is an attempt to maximize the communications performance of the cable, e.g. to lessen pair-to-pair capacitance unbalance, to reduce cross-talk between pairs, and to lower the coefficient of deviation of mutual capacitance of pairs in the cable. To reduce the pair-to-pair capacitance unbalance and to reduce cross-talk, suggestions have been made to move the conductor pairs relative to one another as they progress towards a stranding machine for stranding them into a core unit so that in the finished core unit, the conductor pairs change in relative positions and distances apart. In a suggested method for changing the relative positions of conductor pairs as they move towards the stranding machine, the conductor pairs enter a guide arrangement which comprises a system of horizontal guides movable horizontally and located in vertical tiered fashion. This method was first suggested by S. Norblad of Telefonaktiebolaget L.M. Ericsson, in a paper entitled "Capacitance Unbalance Telecommunications Networks" read before the International Wire and Cable Symposium in 1971. As a result of the use of this method, the conductor pairs obviously change positions and distances apart in the finished core and perhaps in a random manner.

The present invention seeks to provide an electrical telecommunications cable construction in which pair-to-pair capacitance unbalance and cross-talk is minimized in some other manner.

Accordingly, the present invention provides an electrical telecommunications cable comprising a plurality of pairs of individually insulated conductors, the conductors in each pair twisted together, and spacer means holding the pairs of conductors spaced apart.

The spacer means may be disposed along the axis of the cable or may be provided by inwardly extending projections of a jacket which surrounds the cable pairs.

When the spacer means is disposed along the axis of the cable, it may be a central core member of substantially circular shape. Alternatively, the central core member may be provided with radially outwardly extending projections which are spaced apart circumferentially of the core member and define recess regions between the projections. Each pair of conductors is disposed in an individual recess region and is separated from other pairs by the projections. In a further alternative arrangement, the spacer means comprises a plurality of spokes diverging radially outwards from the center to define recess regions for the conductors between the spokes.

Where the spacing means is provided by the projections extending inwardly from the jacket, then these projections are spaced circumferentially around the jacket to provide spacers and the pairs of conductors are separated from one another by the projections. In a practical manner of providing such a structure, the projections converge towards a common center and have spaced apart inner ends disposed outwardly of the center. Chambers are thus formed within the jacket and are defined partly by a circumferentially extending portion of the jacket and two projections positioned one at each end of the circumferentially extending portion.

Embodiments of the invention will now be described, by way of example, with reference to the accompanying drawings, in which:-

Figures 1 to 6 are cross-sectional views through six cables each of which forms an embodiment according to

the present invention.

In a first embodiment as shown by Figure 1, an electrical telecommunications cable 10 comprises a jacket 12 of suitable polymeric material, the jacket surrounding four pairs 14 of individually insulated metal (i.e. copper) conductors 16. The conductors in each pair are twisted together in conventional manner.

As may be seen from Figure 1, the four pairs 14 of conductors are spaced apart circumferentially of the cable by being disposed around a spacer means which is in the form of a central core member 18 of substantially circular cross-section. This spacer member is flexible, is capable of withstanding torsion, and is formed from a dielectric material. The pairs 14 of conductors 16 are stranded around the central core member 18 with the distances between the pairs around the core member maintained along the length of the cable. The spacing of the pairs minimizes cross-talk between the pairs and in effect the voltage induced in the pairs is decreased. Dependent upon the performance requirements of the cable, the distances between the pairs can be determined for any particular AWG of conductor and mathematical modelling may be used to determine these required distances. Further, as may be seen from Figure 1, the distances between adjacent pairs are substantially equal so that the induced voltages between the pairs is substantially the same. Hence, a degree of design control is provided for maintaining the distances between the conductor pairs constant along the length of the cable and as these distances are substantially equal from one pair to another, cross-talk between adjacent pairs is carefully controlled.

In other embodiments now to be described, features of the cable constructions which are similar to that of the first embodiment and/or to each other will bear the same reference numerals.

In a second embodiment, as shown with reference to Figure 2, in a cable 20, the jacket 12 surrounds four pairs

14 of insulated conductors 16 which are held in controlled distances apart, as they extend in stranded condition along the cable, by a spacer means in the form of a central core member 20. This core member extends axially along the cable and is formed from a tensile dielectric material. It has a central mass 22 from which four radially outwardly extending projections 24 extend, the projections 24 being equally angularly displaced around the axis of the core member 20. The projections 24 are tapered as shown in Figure 2 with concave sides which merge from projection to projection to provide a smoothly curved surface to a recess region 26 extending between adjacent projections. Lying within each of the recesses 26 is an individual pair 14 of the conductors. The projections 24 and thus the recesses 26 extend in helical fashion along the core member 20 to allow the pairs 14 to lie within the recesses in stranded fashion. As shown by Figure 2 the projections 24 only extend part way towards the inside surface of the jacket, but it must be understood that the projections could extend further towards the jacket dependent upon the degree of flexibility or stiffness required from the core member.

In Figure 3 is shown a third embodiment of the invention. As shown by Figure 3, a telecommunications cable 30 has its jacket 12 again surrounding four circumferentially spaced pairs 14 of conductors 16. This structure is similar to that described in the second embodiment except that the central core member 20 of the second embodiment is replaced by a spacer means in the form of a body 32 formed by four helically extending spokes 34 which lie, in cross-section, at right angles to one another in cruciform fashion and extend outwardly from a common center as shown. The spokes have a constant thickness from end-to-end and form individual recess regions 36 between the spokes, these recess regions having straight convergent sides formed by sides of the spokes. The recess regions accommodate the pairs 14 of conductors, one pair to each of the recess regions.

In a fourth embodiment as shown by Figure 4, a cable 40 is provided with four pairs 14 of insulated conductors 16. The four pairs 14 are surrounded by a jacket 42 which incorporates spacer means for holding the pairs of conductors in spaced apart positions. The spacer means is provided by a plurality (namely four) of inwardly extending helically extending projections 44 spaced apart circumferentially around the jacket. These projections are integrally formed with the jacket during jacket extrusion and are equally angularly spaced apart around the axis of the jacket. The projections 44 are tapered radially to inner free ends 46 which are spaced outwardly from the axis of the jacket. This tapering is effected by concave surfaces which blend from one projection to another so as to define between adjacent projections recess regions 48 having smooth concave surfaces. The recess regions having openings 50 facing inwardly towards the axis of the jacket. Each pair 14 of conductors is housed within an individual recess 48, as shown, so that the distances between adjacent pairs is substantially constant along the length of the cable and with the distances between the pairs being substantially equal as described for other embodiments above.

In a fifth embodiment as shown by Figure 5 a cable 52 has a jacket 54 also formed with radially inwardly extending and helically extending projections 56 of slightly different shape from those shown with regard to Figure 4. In the case of the fifth embodiment the projections 56 extend with parallel sides radially outwards from their free ends 58 for a certain distance and then each of the projections increases in thickness with diverging flat surface areas 60. The surface areas 60 of adjacent projections 56 are substantially parallel on each side of a recess region or chamber 62 defined between the surface areas 60 and also by the inside surface 64 of a circumferentially extending portion of the jacket. Each chamber 62, which opens in a radially inward direction as described for the fourth embodiment above, houses an indi-

vidual pair 14 of insulated conductors 16.

In a sixth embodiment shown by Figure 6, a cable 66 is of substantially the same structure as the cable 52. The cable 66 differs basically from cable 52 in that the projections 56 of changing thickness are omitted. Instead, the cable 66 has spacer means formed by four radially inwardly extending spokes 68 of constant thickness formed integrally with the jacket. Radially inwardly extending recess regions or chambers 70 housing individual conductor pairs 14 are defined between opposite spoke surfaces and relatively long circumferentially extending portions 72 of jacket 14.

In each of the embodiments described above, the pairs of conductors around the cable from pair-to-pair are maintained substantially equal distances apart with the distances between adjacent pairs maintained substantially constant along the length of the cable. This has the effect of minimizing cross-talk between pairs and permitting closeness between some of the pairs such as to detract from this minimized cross-talk capability.

WHAT IS CLAIMED IS:

1. An electrical telecommunications cable comprising a plurality of pairs of individually insulated conductors, the conductors in each pair twisted together, and spacer means holding the pairs of conductors spaced apart.

2. A cable according to claim 1 wherein the spacer means is disposed along the axis of the cable and the pairs of conductors extend helically around the spacer means in circumferentially spaced positions.

3. A cable according to claim 2 wherein the spacer means is a central core member of substantially circular shape.

4. A cable according to claim 2 wherein the spacer means comprises a central core member provided with radially outwardly extending projections spaced apart circumferentially of the spacer means to define recess regions between the projections with each pair of conductors disposed in an individual recess region and being separated by other pairs by the projections, the projections extending helically along the core member.

5. A cable according to claim 2 wherein the spacer means comprises a plurality of spokes diverging radially outwardly from a center to define recess regions between spokes, with each pair of conductors disposed in an individual recess region and being separated from other pairs by the spokes, the spokes extending helically along the cable.

6. A cable according to claim 1 wherein the pairs of conductors are surrounded by a cable jacket, the jacket formed with a plurality of inwardly extending projections

spaced apart circumferentially around the jacket to provide spacer means, the pairs of conductors separated from one another by the projections.

7. A cable according to claim 6 wherein the projections converge towards a common center and have spaced apart inner ends disposed outwardly of the common center, and chambers are defined within the jacket, each chamber by a circumferentially extending portion of the jacket and two projections, one at each end of the circumferentially extending portion, and each pair of conductors is contained within an individual chamber.

2058046

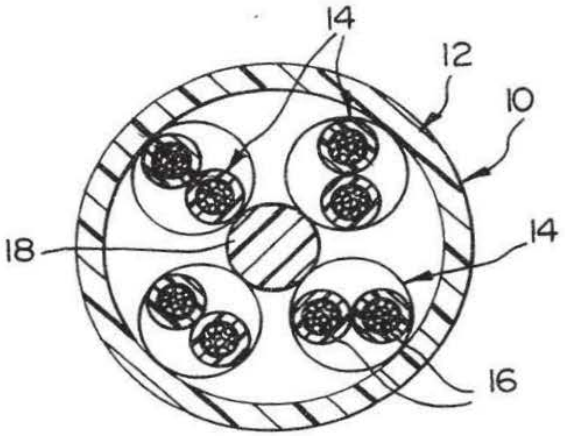

FIG. 1

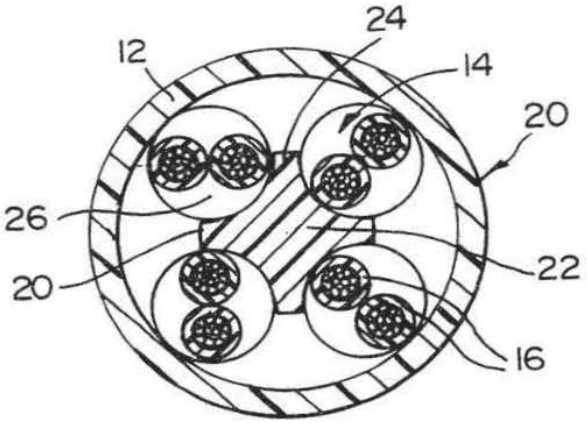

FIG. 2

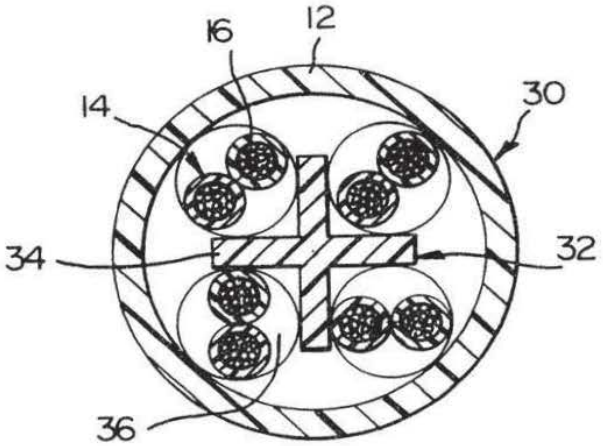

FIG. 3

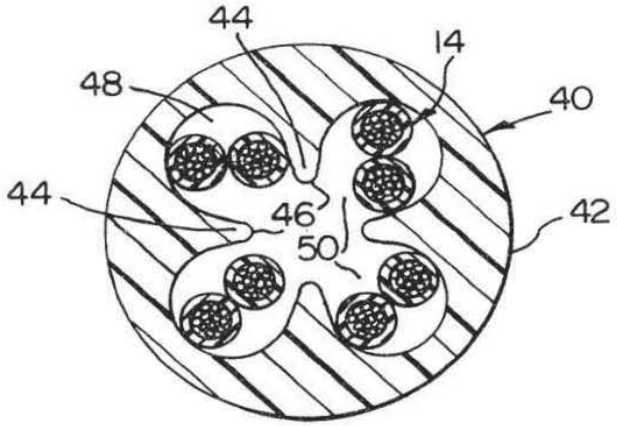

FIG. 4

R. Austin

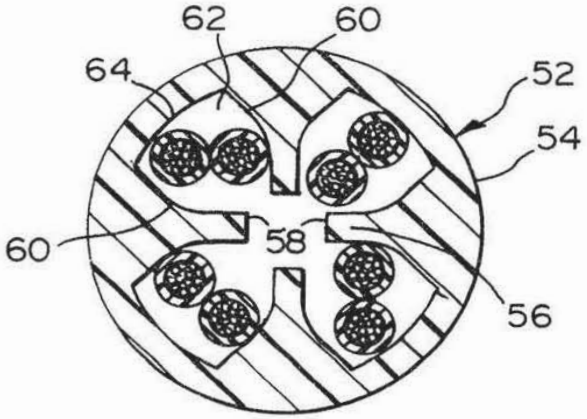

FIG. 5

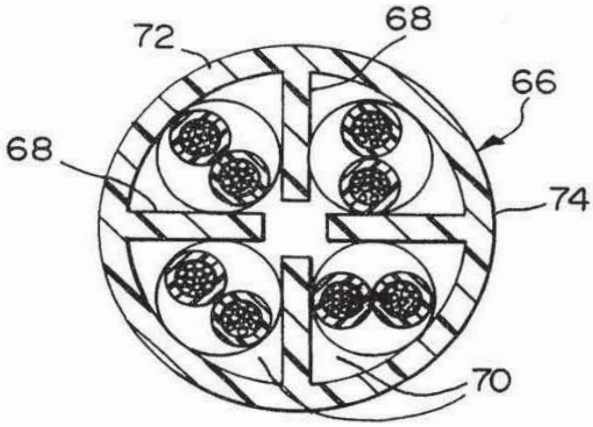

FIG. 6