IEEE Standards

IEEE Std 802.11g™-2003
(Amendment to IEEE Std 802.11™, 1999 Edition (Reaff 2003)
as amended by
IEEE Stds 802.11a™-1999, 802.11b™-1999,
802.11b™-1999/Cor 1-2001, and 802.11d™-2001)

802.11g™

IEEE Standard for
Information technology—

Telecommunications and information exchange between systems—

Local and metropolitan area networks—

Specific requirements

Part 11: Wireless LAN Medium Access Control (MAC) and Physical Layer (PHY) specifications

Amendment 4: Further Higher Data Rate Extension in the 2.4 GHz Band

IEEE Computer Society

Sponsored by the
LAN/MAN Standards Committee

This amendment is an approved IEEE Standard. It will be incorporated into the base standard in a future edition.

IEEE

Published by
The Institute of Electrical and Electronics Engineers, Inc.
3 Park Avenue, New York, NY 10016-5997, USA

27 June 2003

Print: SH95134
PDF: SS95134

Authorized licensed use limited to: [redacted] Downloaded on January 16,2023 at 15:46:33 UTC from IEEE Xplore. Restrictions apply.

IEEE Std 802.11g™-2003
[Amendment to IEEE Std 802.11™, 1999 Edition (Reaff 2003)
as amended by
IEEE Stds 802.11a™-1999, 802.11b™-1999,
802.11b™-1999/Cor 1-2001, and 802.11d™-2001]

IEEE Standard for
Information technology—
Telecommunications and information exchange between systems—
Local and metropolitan area networks—
Specific requirements

Part 11: Wireless LAN Medium Access Control (MAC) and Physical Layer (PHY) specifications

Amendment 4: Further Higher Data Rate Extension in the 2.4 GHz Band

Sponsor

LAN/MAN Standards Committee
of the
IEEE Computer Society

Approved 12 June 2003

IEEE-SA Standards Board

Abstract: Changes and additions to IEEE Std 802.11, 1999 Edition, as amended by IEEE Stds 802.11a-1999, 802.11b-1999, 802.11b-1999/Cor 1-2001, and 802.11d-2001, are provided to support the further higher data rate extension for operation in the 2.4 GHz band.

Keywords: LAN, local area network, radio frequency, wireless

The Institute of Electrical and Electronics Engineers, Inc.
3 Park Avenue, New York, NY 10016-5997, USA

Copyright © 2003 by the Institute of Electrical and Electronics Engineers, Inc.
All rights reserved. Published 25 June 2003. Printed in the United States of America.

IEEE and 802 are registered trademarks in the U.S. Patent & Trademark Office, owned by the Institute of Electrical and Electronics Engineers, Incorporated.

Print: ISBN 0-7381-3700-6 SH95134
PDF: ISBN 0-7381-3701-4 SS95134

No part of this publication may be reproduced in any form, in an electronic retrieval system or otherwise, without the prior written permission of the publisher.

Authorized licensed use limited to: [redacted] Downloaded on January 16,2023 at 15:46:33 UTC from IEEE Xplore. Restrictions apply.

IEEE Standards documents are developed within the IEEE Societies and the Standards Coordinating Committees of the IEEE Standards Association (IEEE-SA) Standards Board. The IEEE develops its standards through a consensus development process, approved by the American National Standards Institute, which brings together volunteers representing varied viewpoints and interests to achieve the final product. Volunteers are not necessarily members of the Institute and serve without compensation. While the IEEE administers the process and establishes rules to promote fairness in the consensus development process, the IEEE does not independently evaluate, test, or verify the accuracy of any of the information contained in its standards.

Use of an IEEE Standard is wholly voluntary. The IEEE disclaims liability for any personal injury, property or other damage, of any nature whatsoever, whether special, indirect, consequential, or compensatory, directly or indirectly resulting from the publication, use of, or reliance upon this, or any other IEEE Standard document.

The IEEE does not warrant or represent the accuracy or content of the material contained herein, and expressly disclaims any express or implied warranty, including any implied warranty of merchantability or fitness for a specific purpose, or that the use of the material contained herein is free from patent infringement. IEEE Standards documents are supplied "**AS IS**."

The existence of an IEEE Standard does not imply that there are no other ways to produce, test, measure, purchase, market, or provide other goods and services related to the scope of the IEEE Standard. Furthermore, the viewpoint expressed at the time a standard is approved and issued is subject to change brought about through developments in the state of the art and comments received from users of the standard. Every IEEE Standard is subjected to review at least every five years for revision or reaffirmation. When a document is more than five years old and has not been reaffirmed, it is reasonable to conclude that its contents, although still of some value, do not wholly reflect the present state of the art. Users are cautioned to check to determine that they have the latest edition of any IEEE Standard.

In publishing and making this document available, the IEEE is not suggesting or rendering professional or other services for, or on behalf of, any person or entity. Nor is the IEEE undertaking to perform any duty owed by any other person or entity to another. Any person utilizing this, and any other IEEE Standards document, should rely upon the advice of a competent professional in determining the exercise of reasonable care in any given circumstances.

Interpretations: Occasionally questions may arise regarding the meaning of portions of standards as they relate to specific applications. When the need for interpretations is brought to the attention of IEEE, the Institute will initiate action to prepare appropriate responses. Since IEEE Standards represent a consensus of concerned interests, it is important to ensure that any interpretation has also received the concurrence of a balance of interests. For this reason, IEEE and the members of its societies and Standards Coordinating Committees are not able to provide an instant response to interpretation requests except in those cases where the matter has previously received formal consideration.

Comments for revision of IEEE Standards are welcome from any interested party, regardless of membership affiliation with IEEE. Suggestions for changes in documents should be in the form of a proposed change of text, together with appropriate supporting comments. Comments on standards and requests for interpretations should be addressed to:

Secretary, IEEE-SA Standards Board
445 Hoes Lane
P.O. Box 1331
Piscataway, NJ 08855-1331
USA

Note: Attention is called to the possibility that implementation of this standard may require use of subject matter covered by patent rights. By publication of this standard, no position is taken with respect to the existence or validity of any patent rights in connection therewith. The IEEE shall not be responsible for identifying patents for which a license may be required by an IEEE standard or for conducting inquiries into the legal validity or scope of those patents that are brought to its attention. A patent holder has filed a statement of assurance that it will grant licenses under these rights without compensation or under reasonable rates and nondiscriminatory, reasonable terms and conditions to all applicants desiring to obtain such licenses. The IEEE makes no representation as to the reasonableness of rates and/or terms and conditions of the license agreements offered by patent holders. Further information may be obtained from the IEEE Standards Department.

Authorization to photocopy portions of any individual standard for internal or personal use is granted by the Institute of Electrical and Electronics Engineers, Inc., provided that the appropriate fee is paid to Copyright Clearance Center. To arrange for payment of licensing fee, please contact Copyright Clearance Center, Customer Service, 222 Rosewood Drive, Danvers, MA 01923 USA; +1 978 750 8400. Permission to photocopy portions of any individual standard for educational classroom use can also be obtained through the Copyright Clearance Center.

Authorized licensed use limited to: [redacted] Downloaded on January 16,2023 at 15:46:33 UTC from IEEE Xplore. Restrictions apply.

Introduction

This introduction is not part of IEEE Std 802.11g-2003 (Amendment to IEEE Std 802.11, 1999 Edition, as amended by IEEE Stds 802.11a-1999, 802.11b-1999, 802.11b-1999/Cor 1-2001, and 802.11d-2001), IEEE Standard for Information Technology—Telecommunications and Information Exchange between Systems—Local and Metropolitan Area Networks—Specific Requirements—Part 11: Wireless LAN Medium Access Control (MAC) and Physical Layer (PHY) specifications—Amendment 4: Further Higher Data Rate Extension in the 2.4 GHz Band.

This amendment is part of a family of standards for local and metropolitan area networks. The relationship between the standard and other members of the family is shown below. (The numbers in the figure refer to IEEE standard designations.[1])

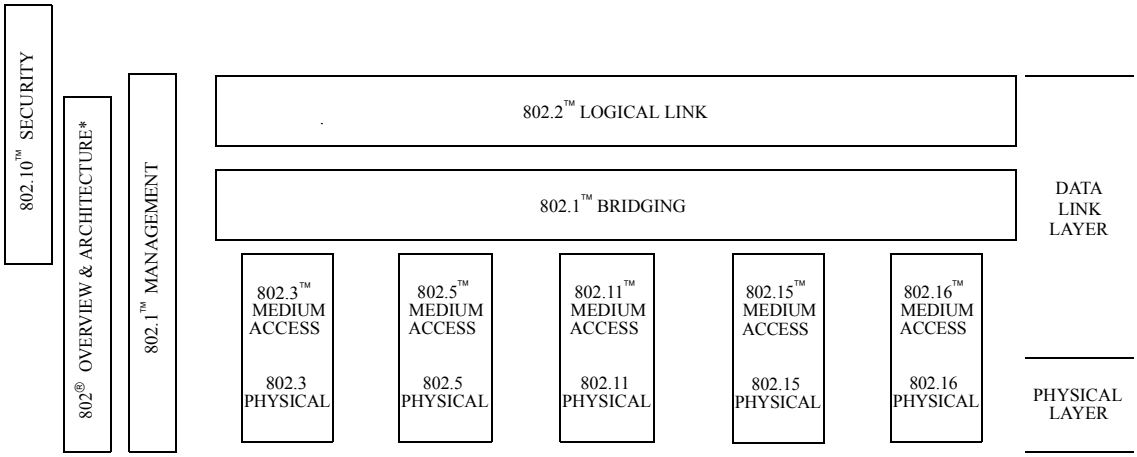

* Formerly IEEE Std 802.1A™.

This family of standards deals with the Physical and Data Link layers as defined by the International Organization for Standardization (ISO) Open Systems Interconnection (OSI) Basic Reference Model (ISO/IEC 7498-1: 1994). The access standards define five types of medium access technologies and associated physical media, each appropriate for particular applications or system objectives. Some access standards have been withdrawn and other types are under investigation.

The standards defining the technologies noted above are as follows:

- IEEE Std 802:[2] — *Overview and Architecture.* This standard provides an overview to the family of IEEE 802 Standards.
- IEEE Std 802.1B™ and 802.1k™ [ISO/IEC 15802-2] — *LAN/MAN Management.* Defines an OSI management-compatible architecture and services and protocol elements for use in a LAN/MAN environment for performing remote management.
- IEEE Std 802.1D™ — *Media Access Control (MAC) Bridges.* Specifies an architecture and protocol for the interconnection of IEEE 802 LANs below the MAC service boundary.

[1]The IEEE standard designations referred to in the above figure and list are trademarks owned by the Institute of Electrical and Electronics Engineers, Incorporated.

[2]The IEEE 802 Overview and Architecture Specification, originally known as IEEE Std 802.1A, has been renumbered as IEEE Std 802. This has been done to accommodate recognition of the base standard in a family of standards. References to IEEE Std 802.1A should be considered as references to IEEE Std 802.

Copyright © 2003 IEEE. All rights reserved.

Authorized licensed use limited to: [redacted] Downloaded on January 16,2023 at 15:46:33 UTC from IEEE Xplore. Restrictions apply.

DELL
EXHIBIT 1019 - PAGE 4

• IEEE Std 802.1E™ [ISO/IEC 15802-4]	*System Load Protocol.* Specifies a set of services and protocol for those aspects those aspects of management concerned with the loading of systems on IEEE 802 LANs.
• IEEE Std 802.1F™	*Common Definitions and Procedures for IEEE 802 Management Information.*
• IEEE Std 802.1G™ [ISO/IEC 15802-5]:	*Remote Media Access Control (MAC) Bridging.* Specifies extensions for the interconnection, using non-LAN systems communication technologies, of geographically separated IEEE 802 LANs below the level of the logical link control protocol.
• IEEE Std 802.1H™ [ISO/IEC TR 11802-5]	*Recommended Practice for Media Access Control (MAC) Bridging of Ethernet V2.0 in IEEE 802 Local Area Networks.*
• IEEE Std 802.1Q™	*Virtual Bridged Local Area Networks.* Defines an architecture for Virtual Bridged LANs, the services provided in Virtual Bridged LANs, and the protocols and algorithms involved in the provision of those services.
• IEEE Std 802.2 [ISO/IEC 8802-2]	*Logical Link Control.*
• IEEE Std 802.3	*CSMA/CD Access Method and Physical Layer Specifications.*
• IEEE Std 802.5 [ISO/IEC 8802-5]	*Token Ring Access Method and Physical Layer Specifications.*
• IEEE Std 802.10	*Standard for Interoperable LAN Security (SILS).* Currently approved: Secure Data Exchange (SDE).
• IEEE Std 802.11 [ISO/IEC 8802-11]	*Wireless LAN Medium Access Control (MAC) Sublayer and Physical Layer Specifications.*
• IEEE Std 802.15	*Wireless Medium Access Control (MAC) and Physical Layer (PHY) Specifications for: Wireless Personal Area Networks.*
• IEEE Std 802.16	*Air Interface for Fixed Broadband Wireless Access Systems.*

The reader of this standard is urged to become familiar with the complete family of standards.

Copyright © 2003 IEEE. All rights reserved.

Authorized licensed use limited to: [redacted] Downloaded on January 16,2023 at 15:46:33 UTC from IEEE Xplore. Restrictions apply.

DELL
EXHIBIT 1019 - PAGE 5

Participants

When the IEEE 802.11 Working Group approved this standard, it had the following membership:

Stuart J. Kerry, *Chair*
Al Petrick and **Harry Worstell,** *Vice-Chairs*
Tim Godfrey, *Secretary*
Brian Mathews, *Publicity Standing Committee*
Teik-Kheong Tan, *Wireless Next-Generation Standing Committee*

John Fakatselis, *Chair Task Group e*
Duncan Kitchin, *Vice-Chair Task Group e*
David Bagby, *Chair Task Group f*
Mika Kasslin, *Chair Task Group h*
David Halasz, *Chair Task Group i*

When the IEEE 802.11 Working Group approved this standard, the Task Group G had the following membership:

Matthew B. Shoemake, *Chair*
John Terry, *Vice-Chair*
Carl F. Andren, *Technical Editor*
Kevin Smart, *Secretary*

Tomoko Adachi
Areg Alimian
Richard Allen
Keith Amann
Merwyn Andrade
Butch Anton
Mitch Aramaki
Takashi Aramaki
Larry Arnett
Geert A. Awater
Floyd Backes
David Bagby
Jay Bain
Dennis J. Baker
Bala Balachander
Raja Banerjea
Boyd Bangerter
Simon Barber
Gil Bar-Noy
John Barr
Kevin M. Barry
Anuj Batra
Tomer Bentzion
Mathilde Benveniste
Simon Black
Jan Boer
Jim Brennan
Ronald Brockmann
Alistair G. Buttar
Nancy Cam-Winget
Bill Carney
Pat Carson
Clint Chaplin
Hung-Kun Chen
Yi-Ming Chen
Greg Chesson
Alan Chickinsky
Aik Chindapol
Leigh M. Chinitz
Bong-Rak Choi
Sunghyun Choi
Ken Clements
John T. Coffey
Terry Cole
Paul Congdon
Craig Conkling
Todor Cooklev
Thomas P. Costas
Wm. Caldwell Crosswy
Peter Dahl
Barry Davis
Rolf De Vegt
Javier del Prado
Michael Derby
Georg Dickmann
Wim Diepstraten
Roger Durand
Eryk Dutkiewicz
Mary DuVal
Donald E. Eastlake III
Dennis Eaton
Peter Ecclesine
Jon Edney
Christoph Euscher
John Fakatselis
Lars Falk
Augustin J. Farrugia
Weishi Feng
Norm Finn
Matthew James Fischer
Kenji Fujisawa
Marcus Gahler
James Gardner
Atul Garg
Al Garrett
Vafa Ghazi
Tim Godfrey
Wataru Gohda
Peter Goidas
Alex Gorokhov
Rik Graulus
Evan Green
Larry Green
Patrick Green
Kerry Greer
Daqing Gu
Srikanth Gummadi
Fred Haisch
David Halasz
Steve D. Halford
Mark Hamilton
Christopher J. Hansen
Yasuo Harada
Amer A. Hassan
Kevin Hayes
Victor Hayes
Chris Heegard
Robert Heile
Garth Hillman
Christopher Hinsz
Jun Hirano
Mikael Hjelm
Jin-Meng Ho
Maarten Hoeben
Michael Hoghooghi
Allen Hollister
Srinath Hosur
Russell Housley
Frank P Howley, Jr.
Dave Hudak
John Hughes
David Hunter
David Hytha
Hiroshi IdeDaichi Imamura
Yasuhiko Inoue
Katsumi Ishii
Eric Jacobsen

Copyright © 2003 IEEE. All rights reserved.

Authorized licensed use limited to: [redacted] Downloaded on January 16,2023 at 15:46:33 UTC from IEEE Xplore. Restrictions apply.

DELL
EXHIBIT 1019 - PAGE 6

Marc Jalfon
Peter Johansson
David Johnston
V. K. Jones
Bobby Jose
Daryl Kaiser
Srinivas Kandala
Jeyhan Karaoguz
Kevin Karcz
Mika Kasslin
Patrick Kelly
Stuart J. Kerry
Andrew K. Khieu
Jamshid Khun-Jush
Ryoji Kido
Dukhyun Kim
Edward Kim
Je Woo Kim
Joonsuk Kim
Ziv Kimhi
Duncan Kitchin
Günter Kleindl
Cees Klik
David Kline
John M. Kowalski
Bruce P. Kraemer
Thomas Kuehnel
Denis Kuwahara
Joe KwakPaul A. Lambert
David S. Landeta
Jim Lansford
Colin Lanzl
Kim Laraqui
Jon LaRosa
David J. Leach, Jr.
Dongjun Lee
Richard van Leeuwen
Martin Lefkowitz
Uriel Lemberger
Onno Letanche
Mike Lewis
Sheung Li
Jie Liang
Isaac Lim Wei Lih
Huashih A. Lin
Shawn Liu
Titus Lo
Peter Loc
Ralph Lombardo, Jr.
Luke Ludeman
Yeong-Chang Maa
Akira Maeki
Douglas Makishima
Mahalingam Mani
Roger Marks
Brian Mathews
Jo-Ellen F Mathews
Mark Mathews
Thomas Maufer
Conrad Maxwell
Justin McCann
Kelly McClellan
Gary McCoy
Bill McFarland
Gary McGarr
Bill McIntosh
Jorge Medina
Mehul Mehta
Pratik Mehta
Robert C. Meier
Graham Melville
Klaus Meyer
Robert Miller
Partho Mishra
Yasuhiko Mizoguchi
Leo Monteban
Michael Montemurro
Tim Moore
Mike Moreton
Roy Morris
Robert Moskowitz
Oliver Muelhens
Peter Murphy
Peter Murray
Andrew Myles
Ravi Narasimhan
Kevin Negus
David B. Nelson
Dan Nemits
Chiu Ngo
Qiang Ni
Gunnar Nitsche
Erwin R. Noble
Hiroshi Nomura
Tzvetan D. Novkov
Ivan Oakes
Bob O'Hara
Yoshihiro Ohtani
Kazuhiro Okanoue
Lior Ophir
Richard H. Paine
Mike Paljug
Vijay M. Patel
Lizy Paul
Sebastien Perrot
Al Petrick
James Portaro
Al Potter
Mike Press
Ron Provencio
Henry Ptasinski
Raad Raad
Ali Raissinia
Murali Ramadoss
Noman Rangwala
Ivan Reede
Stanley A. Reible
Danny Rettig
Edward Reuss
Bill Rhyne
Jim Richards
David Richkas
Maximilian Riegel
Carlos A. Rios
Benno Ritter
Kent G. Rollins
Stefan Rommer
Jon Rosdahl
Pejman Roshan
Reinhard Ruckriem
Ali Sadri
Kenichi Sakusabe
Antonio Salloum Salazar
John H. Santhoff
Anil K. Sanwalka
Sid Schrum
Erik Schylander
Michael Seals
Joe Sensendorf
Yangmin Shen
Matthew Sherman
William Shvodian
David Skellern
Donald I. Sloan
Andrew Smith
Dave Smith
Yoram Solomon
Wei-Jei Song
Amjad Soomro
Gary Spiess
Dorothy V. Stanley
Adrian Stephens
Carl R. Stevenson
Paul F Struhsaker
Michael Su
Masahiro Takagi
Minoru Takemoto
Pek-Yew Tan
Teik-Kheong Tan
Takuma Tanimoto
Roger Teague
Carl Temme
Yossi Texerman
Jerry A. Thrasher
James D. Tomcik
Walt Trzaskus
Allen Tsai
Chih C. Tsien
Tom Tsoulogiannis
Toru Ueda
Naoki Urano
Niels Van Erven
Wim J. van Houtum
Richard van Nee
Patrick Vandenameele
Dmitri Varsanofiev
Jagannatha L. Venkatesha
Madan Venugopal
Nanci Vogtli
Dennis Volpano
Toan X. Vu
Tim Wakeley
Jesse R. Walker
Brad Wallace
Thierry Walrant
Christopher Ware
Fujio Watanabe
Mark Webster
Menzo Wentink
Robert Whelan
Michael Wilhoyte
Richard G.C. Williams
Steven D. Williams
Timothy G. Wong
Harry Worstell
Charles R. Wright
Micheal Wright
Liwen Wu
Yang Xiao
Shugong Xu
Jung Yee
Kit Yong
Albert Young
Heejung Yu
Patrick Yu
Glen Zorn
Arnoud Zwemmer
Jim Zyren

Copyright © 2003 IEEE. All rights reserved.

Authorized licensed use limited to: [redacted] Downloaded on January 16,2023 at 15:46:33 UTC from IEEE Xplore. Restrictions apply.

DELL
EXHIBIT 1019 - PAGE 7

The following members of the balloting committee voted on this standard. Balloters may have voted for approval, disapproval, or abstention.

Butch Anton
Eladio Arvelo
David Bagby
John Barnett
John Barr
Jan Boer
Mitchell Buchman
Kimara Chin
Keith Chow
Terry Cole
Michael Coletta
Todor Cooklev
Todd Cooper
Guru Dutt Dhingra
Thomas Dineen
Sourav Dutta
Peter Ecclesine
Darrell Fletcher
Keng Fong
Avraham Freedman
Michele Gammel
Andrew Germano
James Gilb
Tim Godfrey
Rajugopal Gubbi
Qiang Guo
Victor Hayes
Gerald Heller
Srinivas Kandala
Stuart J. Kerry
Thomas A. Kim
Yongsuk Kim
John M. Kowalski
Pi-Cheng Law
Amir Leshem
Daniel Levesque
Sheung Li
Jeb Linton
Kyle Maus
Michael McInnis
George Miao
Apurva Mody
Leo Monteban
Mike Moreton
Andrew Myles
Charles Ngethe
Paul Nikolich
Erwin R. Noble
Ellis Nolley
Timothy O'Farrell
Bob O'Hara
Satoshi Oyama
Sebastien Perrot
Ian Perryman
Subbu Ponnuswamy
Hugo Pues
Vikram Punj
Charles Rice
Maximilian Riegel
Jon Rosdahl
Douglas Sanderson
Michael Seals
Stephen Shellhammer
Matthew Sherman
Neil Shipp
Gil Shultz
Kevin Smart
Amjad Soomro
Minoru Takemoto
Jerry A. Thrasher
Dmitri Varsanofiev
Hung-yu Wei
Edward Woodrow
Harry Worstell
Jung Yee
Oren Yuen
Arnoud Zwemmer

When the IEEE-SA Standards Board approved this standard on 12 June 2003, it had the following membership:

Don Wright, *Chair*
Howard M. Frazier, *Vice Chair*
Judith Gorman, *Secretary*

H. Stephen Berger
Joe Bruder
Bob Davis
Richard DeBlasio
Julian Forster*
Toshio Fukuda
Arnold M. Greenspan
Raymond Hapeman
Donald M. Heirman
Laura Hitchcock
Richard H. Hulett
Anant Jain
Lowell G. Johnson
Joseph L. Koepfinger*
Tom McGean
Steve Mills
Daleep C. Mohla
William J. Moylan
Paul Nikolich
Gary Robinson
Malcolm V. Thaden
Geoffrey O. Thompson
Doug Topping
Howard L. Wolfman

*Member Emeritus

Also included are the following nonvoting IEEE-SA Standards Board liaisons:

Alan Cookson, *NIST Representative*
Satish K. Aggarwal, *NRC Representative*

Michelle Turner
IEEE Standards Project Editor

Copyright © 2003 IEEE. All rights reserved.

Authorized licensed use limited to: [redacted] Downloaded on January 16,2023 at 15:46:33 UTC from IEEE Xplore. Restrictions apply.

DELL
EXHIBIT 1019 - PAGE 8

CONTENTS

3. Definitions 2

4. Abbreviations and acronyms 2

7. Frame formats 2

7.2 Format of individual frame types 2
7.2.1 Control frames 2
7.2.1.2 CTS frame format 2
7.2.3 Management frames 2
7.2.3.1 Beacon frame format 3
7.2.3.4 Association Request frame format 3
7.2.3.5 Association Response frame format 4
7.2.3.6 Reassociation Request frame format 4
7.2.3.7 Reassociation Response frame format 4
7.2.3.8 Probe Request frame format 5
7.2.3.9 Probe Response frame format 5
7.3 Management frame body components 6
7.3.1 Fixed fields 6
7.3.1.4 Capability Information field 6
7.3.1.9 Status code field 8
7.3.2 Information elements 8
7.3.2.2 Supported Rates element 8
7.3.2.13 ERP Information element 9
7.3.2.14 Extended Supported Rates element 10

9. MAC sublayer functional description 11

9.2 DCF 11
9.2.11 NAV distribution 11
9.2.12 Determination of PLME aCWmin characteristics 11
9.6 Multirate support 12
9.7 Frame exchange sequences 13
9.10 Protection mechanism 13

10. Layer management 14

10.4 PLME SAP interface 14
10.4.4 PLME-DSSSTESTMODE 14
10.4.4.2 PLME-DSSSTESTMODE.request 14

18. High Rate direct sequence spread spectrum (HR/DSSS) PHY specification 14

18.2 High Rate PLCP sublayer 14
18.2.2 PPDU format 14
18.2.2.2 Short PPDU format (optional) 14

Copyright © 2003 IEEE. All rights reserved.

Authorized licensed use limited to: [redacted] Downloaded on January 16,2023 at 15:46:33 UTC from IEEE Xplore. Restrictions apply.

DELL
EXHIBIT 1019 - PAGE 9

19. Extended Rate PHY specification ... 15

19.1 Overview ... 15
19.1.1 Introduction ... 15
19.1.2 Operational modes ... 15
19.1.3 Scope ... 16
19.1.4 Extended Rate PHY functions ... 16
19.2 PHY specific service parameter list ... 17
19.3 Extended Rate PLCP sublayer ... 18
19.3.1 Introduction ... 18
19.3.2 PPDU format ... 18
19.3.2.1 Long preamble PPDU format ... 19
19.3.2.1.1 ERP PLCP length field calculation ... 19
19.3.2.1.2 ERP-PBCC PLCP length (LENGTH) field calculation ... 19
19.3.2.2 Short preamble PPDU format ... 20
19.3.2.3 ERP-OFDM PPDU format ... 20
19.3.2.4 DSSS-OFDM long preamble PPDU format ... 21
19.3.2.4.1 DSSS-OFDM PLCP length field calculation ... 21
19.3.2.5 Short DSSS-OFDM PLCP PPDU format ... 22
19.3.3 PLCP data modulation and rate change ... 22
19.3.3.1 Long and short preamble formats ... 22
19.3.3.2 ERP-PBCC 22 Mbit/s and 33 Mbit/s formats ... 23
19.3.3.3 ERP-OFDM format ... 25
19.3.3.4 Long & short DSSS-OFDM PLCP format ... 25
19.3.3.4.1 Overview of the DSSS-OFDM PLCP PSDU encoding process ... 26
19.3.3.4.2 Long sync training sequence definition ... 26
19.3.3.4.3 OFDM signal field definition ... 26
19.3.3.4.4 Data symbol definition ... 26
19.3.3.4.5 DSSS-OFDM signal extension ... 27
19.3.4 PLCP transmit procedure ... 27
19.3.5 CCA ... 27
19.3.6 PLCP receive procedure ... 27
19.4 ERP PMD operating specifications (general) ... 28
19.4.1 Regulatory requirements ... 28
19.4.2 Operating channel frequencies ... 28
19.4.3 Transmit and receive in-band and out-of-band spurious emissions ... 28
19.4.4 Slot time ... 28
19.4.5 SIFS value ... 28
19.4.6 CCA performance ... 28
19.4.7 PMD transmit specifications ... 29
19.4.7.1 Transmit power levels ... 29
19.4.7.2 Transmit center frequency tolerance ... 29
19.4.7.3 Symbol clock frequency tolerance ... 29
19.5 ERP operation specifications ... 29
19.5.1 Receiver minimum input level sensitivity ... 29
19.5.2 Adjacent channel rejection ... 30
19.5.3 Receive maximum input level capability ... 30
19.5.4 Transmit spectral mask ... 30
19.6 ERP-PBCC operation specifications ... 30
19.6.1 Receiver minimum input level sensitivity ... 30
19.6.2 Receiver adjacent channel rejection ... 30

Copyright © 2003 IEEE. All rights reserved.

Authorized licensed use limited to: [redacted] Downloaded on January 16,2023 at 15:46:33 UTC from IEEE Xplore. Restrictions apply.

DELL
EXHIBIT 1019 - PAGE 10

19.7 DSSS-OFDM operation specifications ... 31
19.7.1 Overview ... 31
19.7.2 Single carrier to multicarrier transition requirements ... 31
19.7.2.1 Spectral binding requirement ... 32
19.7.2.1.1 Common linear distortions ... 33
19.7.2.1.2 Symbol shaping unique to the DSSS-OFDM segment ... 33
19.7.2.1.3 Pulse shaping unique to the single carrier segment ... 35
19.7.2.2 Sample-power matching requirement ... 37
19.7.2.3 Transition time alignment ... 38
19.7.2.4 Single carrier termination ... 39
19.7.2.5 Transition carrier frequency requirement ... 39
19.7.2.6 Transition carrier phase requirement ... 39
19.7.2.7 Transmit modulation accuracy requirement ... 41
19.8 ERP PLME ... 42
19.8.1 PLME SAP ... 42
19.8.2 MIB ... 42
19.8.3 TXTIME ... 42
19.8.3.1 ERP-OFDM TXTIME calculations ... 44
19.8.3.2 ERP-PBCC TXTIME calculations ... 45
19.8.3.3 DSSS-OFDM TXTIME calculations ... 45
19.8.4 ERP-OFDM PLCP PSDU definition ... 46
19.9 Extended Rate PMD sublayer ... 47
19.9.1 Scope and field of application ... 47
19.9.2 Overview of service ... 47
19.9.3 Overview of Interactions ... 47
19.9.4 Basic service and options ... 47
19.9.4.1 PMD_SAP peer-to-peer service primitives ... 47
19.9.4.2 PMD_SAP sublayer-to-sublayer service primitives ... 47
19.9.4.3 PMD_SAP service primitive parameters ... 48
19.9.5 PMD_SAP detailed service specification ... 50
19.9.5.1 PMD_DATA.request ... 50
19.9.5.2 PMD_DATA.indicate ... 50
19.9.5.3 PMD_MODULATION.request ... 50
19.9.5.4 PMD_PREAMBLE.request ... 51
19.9.5.5 PMD_TXSTART.request ... 51
19.9.5.6 PMD_TXEND.request ... 51
19.9.5.7 PMD_ANTSEL.request ... 51
19.9.5.8 PMD_TXPRWLVL.request ... 51
19.9.5.9 PMD_RATE.request ... 51
19.9.5.10 PMD_RSSI.indicate ... 51
19.9.5.11 PMD_SQ.indicate ... 51
19.9.5.12 PMD_CS.indicate ... 51
19.9.5.13 PMD_ED.indicate ... 51

Annex A (normative) Protocol implementation conformance statement (PICS) proforma ... 52

Annex C (normative) Formal description of MAC operation ... 58

Annex D (normative) ASN.1 coding of MAC and PHY MIB ... 64

Copyright © 2003 IEEE. All rights reserved.

Authorized licensed use limited to: [redacted] Downloaded on January 16,2023 at 15:46:33 UTC from IEEE Xplore. Restrictions apply.

DELL
EXHIBIT 1019 - PAGE 11

IEEE Standard for
Information technology—
Telecommunications and information exchange between systems—
Local and metropolitan area networks—
Specific requirements

Part 11: Wireless LAN Medium Access Control (MAC) and Physical Layer (PHY) specifications

Amendment 4: Further Higher Data Rate Extension in the 2.4 GHz Band

[This amendment is based on IEEE Std 802.11™-1999 (Reaff 2003), as amended by IEEE Stds 802.11a™-1999, 802.11b™-1999, 802.11b-1999/Cor 1-2001, and 802.11d™-2001.]

NOTE—The editing instructions contained in this amendment define how to merge the material contained herein into the existing base standard and its amendments to form the comprehensive standard.

The editing instructions are shown in ***bold italic***. Four editing instructions are used: change, delete, insert, and replace. ***Change*** is used to make small corrections in existing text or tables. The editing instruction specifies the location of the change and describes what is being changed either by using ~~strikethrough~~ (to remove old material) or underscore (to add new material). ***Delete*** removes existing material. ***Insert*** adds new material without disturbing the existing material. Insertions may require renumbering. If so, renumbering instructions are given in the editing instructions. ***Replace*** is used to make large changes in existing text, subclauses, tables, or figures by removing existing material and replacing it with new material. Editorial notes will not be carried over into future editions.

Copyright © 2003 IEEE. All rights reserved.

Authorized licensed use limited to: [redacted] Downloaded on January 16,2023 at 15:46:33 UTC from IEEE Xplore. Restrictions apply.

DELL
EXHIBIT 1019 - PAGE 12

3. Definitions

Insert additional definitions after 3.40 and renumber appropriately as follows:

3.41 protection mechanism: Any procedure that attempts to update the NAV of all receiving STAs prior to the transmission of a frame that may or may not be understood by receivers.

3.42 protection mechanism frame: Any frame that is sent as part of a protection mechanism procedure.

4. Abbreviations and acronyms

Insert the following abbreviations alphabetically in the list in Clause 4:

DSSS-OFDM	PHYs using DSSS-OFDM modulation under 19.7 rules
ERP	extended rate PHYs conforming to Clause 19
ERP-PBCC	PHYs using extended rate PBCC modulation under 19.6 rules
ERP-CCK	PHYs using CCK modulation under Clause 19 rules
ERP-DSSS	PHYs using DSSS modulation under Clause 19 rules
ERP-DSSS/CCK	PHYs using DSSS or CCK modulation under Clause 19 rules
ERP-OFDM	PHYs using OFDM modulation under 19.5 rules
EVM	error vector magnitude
NonERP	non-extended rate PHYs conforming to Clause 15 or Clause 18, but not to Clause 19

7. Frame formats

7.2 Format of individual frame types

7.2.1 Control frames

7.2.1.2 CTS frame format

Insert the following paragraph at the end of 7.2.1.2

If the CTS is the first frame in the exchange and the pending data or management frame requires acknowledgment, the duration value is the time, in microseconds, required to transmit the pending data or management frame, plus one SIFS interval, one ACK frame, and an additional SIFS interval. If the CTS is the first frame in the exchange and the pending data or management frame does not require acknowledgment, the duration value is the time, in microseconds, required to transmit the pending data or management frame, plus one SIFS interval. If the calculated duration includes a fractional microsecond, that value is rounded to the next higher integer.

7.2.3 Management frames

Insert the following sentence after the last paragraph:

Gaps may exist in the ordering of fixed fields and elements within frames. The order that remains shall be ascending.

 Copyright © 2003 IEEE. All rights reserved.

Authorized licensed use limited to: [redacted] Downloaded on January 16,2023 at 15:46:33 UTC from IEEE Xplore. Restrictions apply.

DELL
EXHIBIT 1019 - PAGE 13

7.2.3.1 Beacon frame format

Change the note in row 7 of Table 5:

Table 5—Beacon frame body

Order	Information	Notes
7	DS Parameter Set	The DS Parameter Set information element is present within Beacon frames generated by STAs using ~~direct sequence~~ Clause 15, Clause 18, and Clause 19 PHYs.

Insert the following rows in Table 5:

Table 5—Beacon frame body

Order	Information	Notes
19	ERP Information	The ERP Information element is present within Beacon frames generated by STAs using ERP PHYs and is optionally present in other cases.
20	Extended Supported Rates	The Extended Supported Rates element is present whenever there are more than eight supported rates, and it is optional otherwise.

7.2.3.4 Association Request frame format

Insert the following row in Table 7:

Table 7—Association Request frame body

Order	Information	Notes
5	Extended Supported Rates	The Extended Supported Rates element is present whenever there are more than eight supported rates, and it is optional otherwise.

Copyright © 2003 IEEE. All rights reserved.

Authorized licensed use limited to: [redacted] Downloaded on January 16,2023 at 15:46:33 UTC from IEEE Xplore. Restrictions apply.

7.2.3.5 Association Response frame format

Insert the following row in Table 8:

Table 8—Association Response frame body

Order	Information	Notes
5	Extended Supported Rates	The Extended Supported Rates element is present whenever there are more than eight supported rates, and it is optional otherwise.

7.2.3.6 Reassociation Request frame format

Insert the following row in Table 9:

Table 9—Reassociation Request frame body

Order	Information	Notes
6	Extended Supported Rates	The Extended Supported Rates element is present whenever there are more than eight supported rates, and it is optional otherwise.

7.2.3.7 Reassociation Response frame format

Insert the following row in Table 10:

Table 10—Reassociation Response frame body

Order	Information	Notes
5	Extended Supported Rates	The Extended Supported Rates element is present whenever there are more than eight supported rates, and it is optional otherwise.

Copyright © 2003 IEEE. All rights reserved.

Authorized licensed use limited to: [redacted] Downloaded on January 16,2023 at 15:46:33 UTC from IEEE Xplore. Restrictions apply.

DELL
EXHIBIT 1019 - PAGE 15

7.2.3.8 Probe Request frame format

Insert the following row in Table 11:

Table 11—Probe Request frame body

Order	Information	Notes
4	Extended Supported Rates	The Extended Supported Rates element is present whenever there are more than eight supported rates, and it is optional otherwise.

7.2.3.9 Probe Response frame format

Change row 7 of Table 12 as shown:

Table 12—Probe Response frame body

Order	Information	Notes
7	DS Parameter Set	The DS Parameter Set information element is present within Beacon frames generated by STAs using ~~direct sequence~~ Clause 15, Clause 18, and Clause 19 PHYs.

Insert the following rows in Table 12:

Table 12—Probe Response frame body

Order	Information	Notes
18	ERP Information	ERP Information element is present within Probe Response frames generated by STAs using ERP PHYs and is optionally present in other cases.
19	Extended Supported Rates	The Extended Supported Rates element is present whenever there are more than eight supported rates, and it is optional otherwise.

Copyright © 2003 IEEE. All rights reserved.

Authorized licensed use limited to: [redacted] Downloaded on January 16,2023 at 15:46:33 UTC from IEEE Xplore. Restrictions apply.

DELL
EXHIBIT 1019 - PAGE 16

7.3 Management frame body components

7.3.1 Fixed fields

7.3.1.4 Capability Information field

Change the first and second paragraphs in 7.3.1.4 as shown:

The Capability Information field contains a number of subfields that are used to indicate requested or advertised optional capabilities.

The length of the Capability Information field is 2 octets. The Capability Information field consists of the following subfields: ESS, IBSS, CF-Pollable, CF-Poll Request, Privacy, Short Preamble, Packet Binary Convolutional Code (PBCC), ~~and~~ Channel Agility, Short Slot Time, and DSSS-OFDM. The format of the Capability Information field is illustrated in Figure 27. No subfield is supplied for ERP as a STA supports ERP operation if it includes all of the Clause 19 mandatory rates in its supported rate set.

Replace Figure 27 with the following:

0	1	2	3	4	5	6	7	8	9	10	11	12	13	14	15
ESS	IBSS	CF Poll-able	CF Poll Req	Priv-acy	Short Pre-amble	PBCC	Channel Agility	Reserved		Short Slot Time	Reserved		DSSS-OFDM	Reserved	

2 Octets

Figure 27—Capability Information fixed field

Change the ninth paragraph in 7.3.1.4 and insert text following the paragraph as shown:

APs (as well as STAs in IBSSs) shall set the Short Preamble subfield to 1 in transmitted Beacon, Probe Response, Association Response, and Reassociation Response management MMPDUs to indicate that the use of the Short Preamble ~~option~~, as described in 18.2.2.2, is allowed within this BSS. To indicate that the use of the Short Preamble ~~option~~ is not allowed, the Short Preamble subfield shall be set to 0 in Beacon, Probe Response, Association Response, and Reassociation Response management MMPDUs transmitted within the BSS.

Insert the following text following the ninth paragraph in 7.3.1.4:

ERP STAs shall set the MIB variable dot11ShortPreambleOptionImplemented to true as all ERP STAs support both long and short preamble formats.

Change the eleventh paragraph in 7.3.1.4 as shown:

APs (as well as STAs in IBSSs) shall set the PBCC subfield to 1 in transmitted Beacon, Probe Response, Association Response, and Reassociation Response management MMPDUs to indicate that the ~~use of the~~ PBCC Modulation option, as described in 18.4.6.6 and 19.6, is allowed within the BSS. To indicate that the ~~use of the~~ PBCC Modulation option is not allowed, the PBCC subfield shall be set to 0 in Beacon, Probe Response, Association Response, and Reassociation Response management MMPDUs transmitted within the BSS.

Copyright © 2003 IEEE. All rights reserved.

Authorized licensed use limited to: [redacted] Downloaded on January 16,2023 at 15:46:33 UTC from IEEE Xplore. Restrictions apply.

DELL
EXHIBIT 1019 - PAGE 17

Change the thirteenth paragraph in 7.3.1.4 as shown:

Bit 7 of the Capability Information field shall be used to indicate Channel Agility capability by the High Rate direct sequence spread spectrum (HR/DSSS) or ERP PHYs. STAs shall set the Channel Agility bit to 1 when Channel Agility is in use and shall set it to 0 otherwise.

Insert the following paragraphs before the last paragraph of 7.3.1.4:

STAs shall set the Short Slot Time subfield to 1 in transmitted Association Request and Reassociation Request MMPDUs when the MIB attribute dot11ShortSlotTimeOptionImplemented and dot11ShortSlotTimeOptionEnabled are true. Otherwise, the STA shall set the Short Slot Time subfield to 0 in transmitted Association Request and Reassociation Request MMPDUs.

If a STA that does not support Short Slot Time associates, the AP shall use long slot time beginning at the first Beacon subsequent to the association of the long slot time STA. APs shall set the Short Slot Time subfield in transmitted Beacon, Probe Response, Association Response, and Reassociation Response MMPDUs to indicate the currently used slot time value within this BSS.

STAs shall set the MAC variable aSlotTime to the short slot value upon transmission or reception of Beacon, Probe Response, Association Response, and Reassociation Response MMPDUs from the BSS that the STA has joined or started and that have the short slot subfield set to 1 when the MIB attribute dot11ShortSlotTimeOptionImplemented is true. STAs shall set the MAC variable aSlotTime to the long slot value upon transmission or reception of Beacon, Probe Response, Association Response, and Reassociation Response MMPDUs from the BSS that the STA has joined or started and that have the short slot subfield set to 0 when the MIB attribute dot11ShortSlotTimeOptionImplemented is true. STAs shall set the MAC variable aSlotTime to the long slot value at all times when the MIB attribute dot11ShortSlotTimeOptionImplemented is false. When the dot11ShortSlotTimeOptionImplemented MIB attribute is not present, or when the PHY supports only a single slot time value, then the STA shall set the MAC variable aSlotTime to the slot value appropriate for the attached PHY.

For IBSS, the Short Slot Time subfield shall be set to 0.

APs as well as STAs in IBSSs shall set the DSSS-OFDM subfield to 1 in transmitted Beacon, Probe Response, Association Response, and Reassociation Response management MMPDUs to indicate that the use of DSSS-OFDM, as described in 19.7, is allowed within this BSS or by STAs that want to use DSSS-OFDM within an IBSS. To indicate that the use of DSSS-OFDM is not allowed, the DSSS-OFDM subfield shall be set to 0 in Beacon, Probe Response, Association Response, and Reassociation Response MMPDUs transmitted within the BSS.

STAs shall set the DSSS-OFDM subfield to 1 in transmitted Association Request and Reassociation Request MMPDUs when the MIB attribute dot11DSSS-OFDMOptionImplemented and dot11DSSS-OFDMOption-Enabled are true. Otherwise, STAs shall set the DSSS-OFDM subfield to 0 in transmitted Association Request and Reassociation Request MMPDUs.

Change the last paragraph in 7.3.1.4 as shown:

Unused bits ~~8-15~~ of the Capability Information field are reserved.

Copyright © 2003 IEEE. All rights reserved.

Authorized licensed use limited to: [redacted] Downloaded on January 16,2023 at 15:46:33 UTC from IEEE Xplore. Restrictions apply.

DELL
EXHIBIT 1019 - PAGE 18

7.3.1.9 Status code field

Replace the last row in Table 19 with the following:

Table 19—Status codes

Status code	Meaning
22–24	Reserved
25	Association denied due to requesting station not supporting the Short Slot Time option
26	Association denied due to requesting station not supporting the DSSS-OFDM option
27–65 535	Reserved

7.3.2 Information elements

Replace the last row of Table 20 with the following:

Table 20—Element IDs

Information element	Element ID
Reserved	17–41
ERP Information	42
Reserved	43–49
Extended Supported Rates	50
Reserved	51–255

7.3.2.2 Supported Rates element

Change the first two paragraphs of 7.3.2.2 as follows:

The Supported Rates element specifies ~~the values~~ up to eight rates in the Operational-Rate-Set parameter, as described in the MLME_Join.request and MLME_Start.request primitives. The information field is encoded as 1 to 8 octets, where each octet describes a single Supported Rate. If the number of rates in the Operational Rate Set exceeds eight, then an Extended Supported Rate element shall be generated to specify the remaining supported rates. The use of the Extended Supported Rates element is optional otherwise.

Within Beacon, Probe Response, Association Response, and Reassociation Response management frames, each Supported Rate belonging to the BSS basic rate set is encoded as an octet with the MSB (bit 7) set to 1 and bits 6 through 0 are set to the appropriate value from the valid range column of the DATA_RATE row of the table in 10.4.4.2 (e.g., a 1 Mbit/s rate belonging to the BSS basic rate set is encoded as X'82'). Rates not belonging to the BSS basic rate set are encoded with the MSB set to 0, and bits 6 through 0 are set to the appropriate value from the valid range column of the DATA_RATE row of the table in 10.4.4.2 (e.g., a 2 Mbit/s rate not belonging to the BSS basic rate set is encoded as X'04'). The MSB of each Supported Rate octet in other management frame types is ignored by receiving STAs.

Copyright © 2003 IEEE. All rights reserved.

Authorized licensed use limited to: [redacted] Downloaded on January 16,2023 at 15:46:33 UTC from IEEE Xplore. Restrictions apply.

DELL
EXHIBIT 1019 - PAGE 19

Insert the following paragraph at the end of 7.3.2.2:

If the DSSS-OFDM bit is set to 1 in the transmitted Capability Information field of an MMPDU, then any supported rates transmitted in that frame that include rates that are common to both DSSS-OFDM and ERP-OFDM shall be interpreted by receiving and transmitting STA to indicate support for both DSSS-OFDM and ERP-OFDM at the indicated rate. However, if any of those rates are indicated as basic (a rate in the BSSBasicRateSet), then the basic rate designation shall be interpreted by receiving and transmitting STA to apply only for the ERP-OFDM modulation and rate. If the PBCC bit is set to 1 in the transmitted capability field of an MMPDU, then any supported rates transmitted in that frame that include rates that are common to both PBCC and CCK shall be interpreted by receiving and transmitting STA to indicate support for both PBCC and CCK at the indicated rate. However, if any of those rates are indicated as basic, then the basic rate designation shall be interpreted by receiving and transmitting STA to apply only for the CCK modulation and rate. That is, if the rate is indicated as basic, the basic designation does not apply to DSSS-OFDM, PBCC, or ERP-PBCC.

Insert the following subclauses (7.3.2.13 and 7.3.2.14) at the end of 7.3.2:

7.3.2.13 ERP Information element

The ERP Information element contains information on the presence of Clause 15 or Clause 18 stations in the BSS that are not capable of Clause 19 (ERP-OFDM) data rates. It also contains the requirement of the ERP Information element sender (AP in a BSS or STA in an IBSS) as to the use of protection mechanisms to optimize BSS performance and as to the use of long or short Barker preambles. See Figure 42E for a definition of the frame element.

If one or more NonERP STAs are associated in the BSS, the Use_Protection bit shall be set to 1 in transmitted ERP Information Elements.

In an IBSS, the setting of the Use_Protection bit is left to the STA. In an IBSS, there is no uniform concept of association; therefore, a typical algorithm for setting the Use_Protection bit will take into account the traffic pattern and history on the network. If a member of an IBSS detects one or more NonERP STAs that are members of the same IBSS, then the Use_Protection bit should be set to 1 in the ERP Information Element of transmitted Beacon and Probe Response frames.

The NonERP_Present bit shall be set to 1 when a NonERP STA is associated with the BSS. Examples of when the NonERP present bit may additionally be set to 1 include, but are not limited to, when

a) A NonERP infrastructure or independent BSS is overlapping (a NonERP BSS may be detected by the reception of a Beacon where the supported rates contain only Clause 15 or Clause 18 rates).
b) In an IBSS, if a Beacon frame is received from one of the IBSS participants where the supported rate set contains only Clause 15 or Clause 18 rates.
c) A management frame (excluding a Probe Request) is received where the supported rate set includes only Clause 15 or Clause 18 rates.

ERP APs and ERP STAs shall invoke the use of a protection mechanism after transmission or reception of the Use_Protection bit with a value of 1 in an MMPDU to or from the BSS that the ERP AP or ERP STA has joined or started. ERP APs and ERP STAs may additionally invoke protection mechanism use at other times. ERP APs and ERP STAs may disable protection mechanism use after transmission or reception of the Use_Protection bit with a value of 0 in an MMPDU to or from the BSS that the ERP AP or ERP STA has joined or started.

When there are no NonERP STAs associated with the BSS and the ERP Information Element sender's dot11ShortPreambleOptionImplemented MIB variable is set to true, then the Barker_Preamble_Mode bit may be set to 0. The Barker_Preamble_Mode bit shall be set to 1 by the ERP Information Element sender if

Copyright © 2003 IEEE. All rights reserved.

Authorized licensed use limited to: [redacted] Downloaded on January 16,2023 at 15:46:33 UTC from IEEE Xplore. Restrictions apply.

DELL
EXHIBIT 1019 - PAGE 20

one or more associated NonERP STAs are not short preamble capable as indicated in their Capability Information field, or if the ERP Information Element senders dot11ShortPreambleOptionImplemented MIB variable is set to false.

If a member of an IBSS detects one or more non-short preamble-capable STAs that are members of the same IBSS, then the Barker_Preamble_Mode bit should be set to 1 in the transmitted ERP Information Element.

ERP APs and ERP STAs shall use long preambles when transmitting Clause 15, Clause 18, and Clause 19 frames after transmission or reception of an ERP Information Element with a Barker_Preamble_Mode value of 1 in an MMPDU to or from the BSS that the ERP AP or ERP STA has joined or started, regardless of the value of the short preamble capability bit from the same received or transmitted MMPDU that contained the ERP Information Element. ERP APs and ERP STAs may additionally use long preambles when transmitting Clause 15, Clause 18, and Clause 19 frames at other times. ERP APs and ERP STAs may use short preambles when transmitting Clause 15, Clause 18, and Clause 19 frames after transmission or reception of an ERP Information Element with a Barker_Preamble_Mode value of 0 in an MMPDU to or from the BSS that the ERP AP or ERP STA has joined or started, regardless of the value of the short preamble capability bit from the same received or transmitted MMPDU. NonERP STAs and NonERP APs may also follow the rules given in this paragraph.

Recommended behavior for setting the Use_Protection bit is contained in 9.10.

The ERP Information element shall have the form shown in Figure 42E.

Element ID	Length (1)	Non ERP present	Use Protection	Barker Preamble mode	r3	r4	r5	r6	r7
Octets	1	1	1						

Figure 42E—ERP Information element

Bits r3 through r7 are reserved, set to 0, and are ignored on reception. Note that the length of this element is flexible and may be expanded in the future.

7.3.2.14 Extended Supported Rates element

The Extended Supported Rates element specifies the rates in the OperationalRateSet as described in the MLME_JOIN.request and MLME_START.request primitives that are not carried in the Supported Rates element. The information field is encoded as 1 to 255 octets where each octet describes a single supported rate.

Within Beacon, Probe Response, Association Response, and Reassociation Response management frames, each supported rate belonging to the BSS basic rate set, as defined in 10.3.10.1, is encoded as an octet with the msb (bit 7) set to 1 and bits 6 through 0 are set to the appropriate value from the valid range column of the DATA_RATE row of the table in 10.4.4.2 (e.g., a 1 Mbit/s rate belonging to the BSS basic rate set is encoded as X'82'). Rates not belonging to the BSS basic rate set are encoded with the msb set to 0, and bits 6 through 0 are set to the appropriate value from the valid range column of the DATA_RATE row of the table in 10.4.4.2 (e.g., a 2 Mbit/s rate not belonging to the BSS basic rate set is encoded as X'04'). The msb of each octet in the Extended Supported Rate element in other management frame types is ignored by receiving STAs.

BSS basic rate set information in Beacon and Probe Response management frames is used by STAs in order to avoid associating with a BSS if they do not support all the data rates in the BSS basic rate set.

 Copyright © 2003 IEEE. All rights reserved.

Authorized licensed use limited to: [redacted] Downloaded on January 16,2023 at 15:46:33 UTC from IEEE Xplore. Restrictions apply.

DELL
EXHIBIT 1019 - PAGE 21

For stations supporting eight or fewer data rates, this element is optional for inclusion in all of the frame types that include the supported rates element. For stations supporting more than eight data rates, this element shall be included in all of the frame types that include the supported rates element.

The Extended Supported Rates element has the format shown in Figure 42F.

	Element ID	Length	Extended Supported Rates
Octets	1	1	1-255

Figure 42F—Extended Supported Rates element format

9. MAC sublayer functional description

9.2 DCF

Change the eleventh paragraph in 9.2 as shown:

The medium access protocol allows for stations to support different sets of data rates. All STAs shall be able to receive and transmit at all the data rates in the aBasicRateSet specified parameter of the MLME_Join.request and MLME_Start.request primitives. To support the proper operation of the RTS/CTS and the virtual CS mechanism, all STAs shall be able to detect the RTS and CTS frames. ~~For this reason, the RTS and CTS frames shall be transmitted at one of the rates in the BSS basic rate set. (See 9.6 for a description of multirate operation.)~~

Insert the following subclauses after 9.2.10:

9.2.11 NAV distribution

When a node needs to distribute NAV information, for instance, to reserve the medium for a transmission of a non-basic rate frame (that may not be heard by other nodes in the BSS), the node may first transmit a CTS frame with the RA field equal to its own MAC address (CTS-to-self) and with a duration value that protects the pending transmission, plus possibly an ACK frame.

The CTS-to-self NAV distribution mechanism is lower in network overhead cost than is the RTS/CTS NAV distribution mechanism, but CTS-to-self is less robust against hidden nodes and collisions than RTS/CTS. STAs employing a NAV distribution mechanism should choose a mechanism such as CTS-to-self or RTS/CTS that is appropriate for the given network conditions. If errors occur when employing the CTS-to-self mechanism, STAs should switch to a more robust mechanism.

9.2.12 Determination of PLME aCWmin characteristics

In the case of the Clause 19 Extended Rate PHY, the aCWmin value is dependent on the requestor's characteristic rate set. The characteristic rate set is equal to the IBSS's supported rate set when the STA is operating as a member of an IBSS. It is equal to the AP's supported rate set when the STA is associated with an AP. At all other times, it is equal to the STA's mandatory rate set. The MAC variable aCWmin is set to aCWmin(0) if the characteristic rate set includes only rates in the set 1, 2, 5.5, 11 otherwise, aCWmin is set to aCWmin(1). If the returned value for aCWmin is a scalar, then the MAC always sets the variable aCWmin to the returned scalar value of aCWmin.

Copyright © 2003 IEEE. All rights reserved.

Authorized licensed use limited to: [redacted] Downloaded on January 16,2023 at 15:46:33 UTC from IEEE Xplore. Restrictions apply.

DELL
EXHIBIT 1019 - PAGE 22

9.6 Multirate support

Change the text of 9.6 as shown:

Some PHYs have multiple data transfer rate capabilities that allow implementations to perform dynamic rate switching with the objective of improving performance. The algorithm for performing rate switching is beyond the scope of this standard, but in order to ensure coexistence and interoperability on multirate-capable PHYs, this standard defines a set of rules ~~that shall~~ to be followed by all STAs.

~~All control frames shall be transmitted at one of the rates in the BSS basic rate set so that they will be understood.~~

All control frames that initiate a frame exchange shall be transmitted at one of the rates in the BSSBasicRateSet, unless the transmitting STAs protection mechanism is enabled, and the control frame is a protection mechanism frame; in which case, the control frame shall be transmitted at a rate according to the separate rules for determining the rates of transmission of protection frames in 9.10.

All frames with multicast or broadcast ~~receiver~~ in the addresses1 field shall be transmitted at one of the rates included in the BSS basic rate set, regardless of their type or subtype.

Data and/or management MPDUs with ~~a~~ unicast ~~receiver~~ in addresses1 shall be sent on any supported data rate selected by a rate switching mechanism ~~(whose output is an internal MAC variable called MAC-CurrentRate, which is used for calculating the Duration/ID field of each frame). An~~ No STA shall ~~not~~ transmit a unicast frame at a rate that is ~~known~~ not ~~to be~~ supported by the destination STA, as reported in any Supported Rates and Extended Supported Rates element in the management frames. For frames of type Data + CF – ACK, Data + CF – Poll + CF – ACK, and CF – Poll + CF – ACK, the rate chosen to transmit the frame should be supported by both the addressed recipient STA and the STA to which the ACK is intended.

Under no circumstances shall a STA initiate transmission of a data or management frame at a data rate higher than the greatest rate in the OperationalRateSet, a parameter of the MLME_JOIN.request primitive.

To allow the transmitting STA to calculate the contents of the Duration/ID field, ~~the responding~~ a STA responding to a received frame shall transmit its Control Response ~~and Management Response frames~~ (either CTS or ACK) frames at the highest rate in the BSSBasicRateSet that is less than or equal to the rate of the immediately previous frame in the frame exchange sequence (as defined in 9.7) and that is of the same modulation type as the received frame. If no rate in the basic rate set meets these conditions, then the control frame sent in response to a received frame shall be transmitted at the highest mandatory rate of the PHY that is less than or equal to the rate of the received frame, and that is of the same modulation type as the received frame. In addition, the Control Response frame shall be sent using the same PHY options as the received frame, unless they conflict with the requirement to use the BSSBasicRateSet.

An alternative rate for the control response frame may be used, provided that the duration of the control response frame at the alternative rate is the same as the duration of the control response frame at the originally chosen rate and the alternative rate is in either the BSSBasicRateSet or the mandatory rate set of the PHY and the modulation of the control response frame at the alternative rate is the same type as that of the received frame.

~~For the HR/DSSS PHY, the time required to transmit a frame for use in the Duration/ID field is determined using the PLME-TXTIME.request primitive and the PLME-TXTIME.confirm primitive (see 10.4.7).~~

For the ~~5 GHz PHY~~ Clause 17, Clause 18, and Clause 19 PHYs, the time required to transmit a frame for use in the Duration/ID field is determined using the PLME-TXTIME.request primitive (see 10.4.6) and the PLME-TXTIME.confirm primitive (see 10.4.7) ~~The calculation method of TXTIME duration is defined in 17.4.3~~, both defined in 17.4.3, 18.3.4, 19.8.3.1, 19.8.3.2, or 19.8.3.3 depending on the PHY options.

 Copyright © 2003 IEEE. All rights reserved.

Authorized licensed use limited to: [redacted] Downloaded on January 16,2023 at 15:46:33 UTC from IEEE Xplore. Restrictions apply.

DELL
EXHIBIT 1019 - PAGE 23

9.7 Frame exchange sequences

Change rows 1 and 2 and insert a new row following row 2 in Table 21 as shown:

Table 21—Frame sequences

Sequence	Frames in sequence	Usage
{CTS-} Data(bc/mc)	1 or 2	Broadcast or multicast MSDU
{CTS-} Mgmt(bc)	1 or 2	Broadcast MMPDU
CTS - [Frag - ACK -] Last - ACK	3 or more	Protected directed MSDU or MMPDU

Insert the following subclause at the end of Clause 9:

9.10 Protection mechanism

The intent of a protection mechanism is to ensure that a STA does not transmit an MPDU of type Data or an MMPDU with an ERP-OFDM preamble and header unless it has attempted to update the NAV of receiving NonERP STAs. The updated NAV period shall be longer than or equal to the total time required to send the data and any required response frames. ERP STAs shall use protection mechanisms (such as RTS/CTS or CTS-to-self) for ERP-OFDM MPDUs of type Data or an MMPDU when the Use_Protection field of the ERP Information element is set to 1 (see the requirements of 9.2.6). Protection mechanisms frames shall be sent using one of the mandatory Clause 15 or Clause 18 rates and using one of the mandatory Clause 15 or Clause 18 waveforms, so all STAs in the BSA will know the duration of the exchange even if they cannot detect the ERP-OFDM signals using their CCA function.

Note that when using the Clause 19 options, ERP-PBCC or DSSS-OFDM, there is no need to use protection mechanisms, as these frames start with a DSSS header.

In the case of a BSS composed of only ERP STAs, but with knowledge of a neighboring co-channel BSS having NonERP traffic, the AP may require protection mechanisms to protect the BSS's traffic from interference. This will provide propagation of NAV to all attached STAs and all STAs in a neighboring co-channel BSS within range by BSS basic rate set modulated messages. The frames that propagate the NAV throughout the BSS include RTS/CTS/ACK frames, all data frames with the "more fragments" field set to 1, all data frames sent in response to PS-Poll that are not proceeded in the frame sequence by a data frame with the "more fragments" field set to 1, Beacon frames with nonzero CF time, and CF-End frames.

When RTS/CTS is used as the protection mechanism, cases exist such as NAV resetting (discretionary, as indicated in 9.2.5.4), where a hidden station may reset its NAV and this may cause a collision. The likelihood of occurrence is low, and it is not considered to represent a significant impairment to overall system operation. A mechanism to address this possible situation would be to use alternative protection mechanisms, or to revert to alternative modulation methods.

If a protection mechanism is being used, a fragment sequence may only employ ERP-OFDM modulation for the final fragment and control response.

The rules for calculating RTS/CTS NAV fields are unchanged when using RTS/CTS as a protection mechanism.

Additionally, if any of the rates in the BSSBasicRateSet of the protection mechanism frame transmitting STA's BSS are Clause 15 or Clause 18 rates, then the protection mechanism frames shall be sent at one of those Clause 15 or Clause 18 basic rates.

Copyright © 2003 IEEE. All rights reserved.

Authorized licensed use limited to: [redacted] Downloaded on January 16,2023 at 15:46:33 UTC from IEEE Xplore. Restrictions apply.

DELL
EXHIBIT 1019 - PAGE 24

10. Layer management

10.4 PLME SAP interface

10.4.4 PLME-DSSSTESTMODE

10.4.4.2 PLME-DSSSTESTMODE.request

Change the sixth and eighth row in the table in 10.4.4.2 as shown:

Name	Type	Valid range	Description
DATA_RATE	Integer	2, 4, 11, 12, 18, 22, 24, 36, 44, 48, 66, 72, 96, 108	Selects among rates 02 = 1 Mbit/s 04 = 2 Mbit/s 11 = 5.5 Mbit/s 12 = 6 Mbit/s 18 = 9 Mbit/s 22 = 11 Mbit/s 24 = 12 Mbit/s 36 = 18 Mbit/s 44 = 22 Mbit/s 48 = 24 Mbit/s 66 = 33 Mbit/s 72 = 36 Mbit/s 96 = 48 Mbit/s 108 = 54 Mbit/s
MODULATION_CODE_TYPE	Integer ~~Boolean~~	null, 0, 1, 2	Selects the among modulation ~~code~~ options 0 = ~~CCK~~ no optional modulation modes 1 = ~~PBCC~~ optional ERP-PBCC modes 2 = optional DSSS-OFDM modes Can be null.

18. High Rate direct sequence spread spectrum (HR/DSSS) PHY specification

18.2 High Rate PLCP sublayer

18.2.2 PPDU format

Change the title and first paragraph of 18.2.2.2 as shown:

18.2.2.2 Short PPDU format ~~(optional)~~

The short PLCP preamble and header (HR/DSSS/short) is defined as optional for HR/DSSS. The Short Preamble and header may be used to minimize overhead and, thus, maximize the network data throughput. The format of the PPDU, with HR/DSSS/short, is depicted in Figure 132. For Clause 19 STAs, support of this preamble type is mandatory.

Copyright © 2003 IEEE. All rights reserved.

Authorized licensed use limited to: [redacted] Downloaded on January 16,2023 at 15:46:33 UTC from IEEE Xplore. Restrictions apply.

DELL
EXHIBIT 1019 - PAGE 25

Insert new Clause 19 as follows:

19. Extended Rate PHY specification

19.1 Overview

This clause specifies further rate extension of the PHY for the Direct Sequence Spread Spectrum (DSSS) system of Clause 15 and the extensions of Clause 18. Hereinafter the PHY defined in this clause will be known as the Extended Rate PHY (ERP). This PHY operates in the 2.4 GHz ISM band.

19.1.1 Introduction

The ERP builds on the payload data rates of 1 and 2 Mbit/s, as described in Clause 15, that use DSSS modulation and builds on the payload data rates of 1, 2, 5.5, and 11 Mbit/s, as described in Clause 18, that use DSSS, CCK, and optional PBCC modulations. The ERP draws from Clause 17 to provide additional payload data rates of 6, 9, 12, 18, 24, 36, 48, and 54 Mbit/s. Of these rates, transmission and reception capability for 1, 2, 5.5, 11, 6, 12, and 24 Mbit/s data rates is mandatory.

Two additional optional ERP-PBCC modulation modes with payload data rates of 22 and 33 Mbit/s are defined. An ERP-PBCC station may implement 22 Mbit/s alone or 22 and 33 Mbit/s. An optional modulation mode known as DSSS-OFDM is also incorporated with payload data rates of 6, 9, 12, 18, 24, 36, 48, and 54 Mbit/s.

19.1.2 Operational modes

The radio portion of all Clause 19-compliant ERP systems implements all mandatory modes of Clause 17 and Clause 18, except it uses the 2.4 GHz frequency band and channelization plan specified in 18.4.6. The ERP has the capability to decode all Clause 15 and Clause 18 PLCPs and all ERP-OFDM PLCPs. In addition, it is mandatory that all ERP-compliant equipment be capable of sending and receiving the short preamble that is (and remains) optional for Clause 18 PHYs.

The ERP has the capability to detect ERP and Clause 18 preambles whenever a clear channel assessment (CCA) is requested. Because protection mechanisms are not required in all cases, the ERP CCA mechanisms for all preamble types shall be active at all times.

An ERP BSS is capable of operating in any combination of available ERP modes (Clause 19 PHYs) and NonERP modes (Clause 15 or Clause 18 PHYs). For example, a BSS could operate in an ERP-OFDM-only mode, a mixed mode of ERP-OFDM and ERP-DSSS/CCK, or a mixed mode of ERP-DSSS/CCK and Non-ERP. When options are enabled, combinations are also allowed.

The changes to the base standard required to implement the ERP are summarized as follows:

a) ERP-DSSS/CCK
   1) The PHY uses the capabilities of Clause 18 with the following exceptions:
      i) Support of the short PLCP PPDU header format capability of 18.2.2.2 is mandatory.
      ii) CCA (see 18.4.8.4) has a mechanism that will detect all mandatory Clause 19 sync symbols.
      iii) The maximum input signal level (see 18.4.8.2) is –20 dBm.
      iv) Locking the transmit center frequency and the symbol clock frequency to the same reference oscillator is mandatory.

Copyright © 2003 IEEE. All rights reserved.

Authorized licensed use limited to: [redacted] Downloaded on January 16,2023 at 15:46:33 UTC from IEEE Xplore. Restrictions apply.

DELL
EXHIBIT 1019 - PAGE 26

b) ERP-OFDM
   1) The PHY uses the capabilities of Clause 17 with the following exceptions:
      i) The frequency plan is in accordance with 18.4.6.1 and 18.4.6.2 instead of 17.3.8.3.
      ii) CCA has a mechanism that will detect all mandatory Clause 19 sync symbols.
      iii) The frequency accuracy (see 17.3.9.4 and 17.3.9.5) is ±25 PPM.
      iv) The maximum input signal level (see 17.3.10.4) is -20 dBm.
      v) The slot time is 20 µs in accordance with 18.3.3, except that an optional 9 µs slot time may be used when the BSS consists of only ERP STAs.
      vi) SIFS time is 10 µs in accordance with 18.3.3. See 19.3.2.3 for more detail.
c) ERP-PBCC (Optional)
   1) This is a single-carrier modulation scheme that encodes the payload using a 256-state packet binary convolutional code. These are extensions to the PBCC modulation in Clause 18. ERP-PBCC modes with payload data rates of 22 and 33 Mbit/s are defined in 19.6.
d) DSSS-OFDM (Optional)
   1) This is a hybrid modulation combining a DSSS preamble and header with an OFDM payload transmission. DSSS-OFDM modes with payload data rates of 6, 9, 12, 18, 24, 36, 48, and 54 Mbit/s are defined in 19.7.
   2) If the optional DSSS-OFDM mode is used, the supported rates in that mode are the same as the ERP-OFDM supported rates.

The 2.4 GHz ISM band is a shared medium, and coexistence with other devices such as Clause 15 and Clause 18 STAs is an important issue for maintaining high performance in Clause 19 (ERP) STAs. The ERP modulations (ERP-OFDM, ERP-PBCC, and DSSS-OFDM) have been designed to coexist with existing Clause 15 and Clause 18 STAs. This coexistence is achieved by several means, including virtual carrier sense (RTS/CTS or CTS-to-self), carrier sense and collision avoidance protocols, and MSDU fragmentation.

19.1.3 Scope

This clause specifies the ERP entity and the deviations from earlier clauses to accommodate it. It is organized by reference to the relevant earlier clauses to avoid excessive duplication.

The Extended Rate PHY layer consists of the following two protocol functions:

a) A physical layer convergence function that adapts the capabilities of the physical medium dependent (PMD) system to the PHY service available. This function is supported by the PHY layer convergence procedure (PLCP), which defines a method for mapping the MAC sublayer protocol data units (MPDU) into a framing format suitable for sending and receiving user data and management information between two or more STAs using the associated PMD system. The PHY exchanges PHY protocol data units (PPDU) that contain PLCP service data units (PSDU). The MAC uses the PHY service, so each MPDU corresponds to a PSDU that is carried in a PPDU.
b) A PMD system, whose function defines the characteristics and method of transmitting and receiving data through a wireless medium between two or more STAs; each using the ERP.

19.1.4 Extended Rate PHY functions

The architecture of the ERP is depicted in the ISO/IEC basic reference model shown in Figure 141 of 18.4.1. The ERP contains three functional entities: the PMD function, the PHY convergence function (PLCP), and the layer management function.

The ERP service is provided to the MAC through the PHY service primitives described in Clause 12. Interoperability is addressed by use of the carrier sense mechanism specified in 9.2.1 and the protection mechanism in 9.10. This mechanism allows NonERP stations to know of ERP traffic that they cannot demodulate so that they may defer the medium to that traffic.

 Copyright © 2003 IEEE. All rights reserved.

Authorized licensed use limited to: [redacted] Downloaded on January 16,2023 at 15:46:33 UTC from IEEE Xplore. Restrictions apply.

DELL
EXHIBIT 1019 - PAGE 27

19.2 PHY-specific service parameter list

The architecture of the IEEE 802.11 MAC is intended to be PHY independent. Some PHY implementations require PHY-dependent MAC state machines running in the MAC sublayer in order to meet certain PMD requirements. The PHY-dependent MAC state machine resides in a sublayer defined as the MAC sublayer management entity (MLME). In certain PMD implementations, the MLME may need to interact with the PLME as part of the normal PHY SAP primitives. These interactions are defined by the PLME parameter list currently defined in the PHY service primitives as TXVECTOR and RXVECTOR. The list of these parameters, and the values they may represent, are defined in the specific PHY specifications for each PMD. This subclause addresses the TXVECTOR and RXVECTOR for the ERP. The service parameters for RXVECTOR and TXVECTOR shall follow 17.2.2 and 17.2.3.

Several service primitives include a parameter vector. DATARATE and LENGTH are described in 12.3.4.4. The remaining parameters are considered to be management parameters and are specific to this PHY.

The parameters in Table 123A are defined as part of the TXVECTOR parameter list in the PHY-TXSTART.request service and PLME-TXTIME.request primitives.

Table 123A—TXVECTOR parameters

Parameter	Value
DATARATE	The rate used to transmit the PSDU in Mbit/s Allowed value depends on value of MODULATION parameter: ERP-DSSS: 1 and 2 ERP-CCK: 5.5 and 11 ERP-OFDM: 6, 9, 12, 18, 24, 36, 48, and 54 ERP-PBCC: 5.5, 11, 22, and 33 DSSS-OFDM: 6, 9, 12, 18, 24, 36, 48, and 54.
LENGTH	The length of the PSDU in octets Range: 1–4095.
PREAMBLE_TYPE	The preamble used for the transmission of the PPDU Enumerated type for which the allowed value depends on value of MODULATION parameter: ERP-OFDM: null ERP-DSSS, ERP-CCK, ERP-PBCC, DSSS-OFDM: SHORTPREAMBLE, LONGPREAMBLE.
MODULATION	The modulation used for the transmission of this PSDU Enumerated type: ERP-DSSS, ERP-CCK, ERP-OFDM, ERP-PBCC, DSSS-OFDM.
SERVICE	The scrambler initialization vector When the modulation format selected is ERP-OFDM or DSSS-OFDM, seven null bits are used for scrambler initialization as described in 17.3.5.1. The remaining bits are reserved. For all other ERP modulations that all start with ERP-DSSS short or long preamble, the bits of the SERVICE field are defined in Table 123C and the SERVICE field is not applicable in the TXVECTOR, so the entire field is reserved.
TXPWR_LEVEL	The transmit power level. The definition of these levels is up to the implementer. 1–8.

Copyright © 2003 IEEE. All rights reserved.

Authorized licensed use limited to: [redacted] Downloaded on January 16,2023 at 15:46:33 UTC from IEEE Xplore. Restrictions apply.

DELL
EXHIBIT 1019 - PAGE 28

The parameters in Table 123B are defined as part of the RXVECTOR parameter list in the PHY-RXSTART.indicate service primitive. When implementations require the use of these vectors, some or all of these parameters may be used in the vectors.

Table 123B—RXVECTOR parameters

Parameter	Value
DATARATE	The rate at which the PSDU was received in Mbit/s. Allowed value depends on value of MODULATION parameter: ERP-DSSS: 1 and 2 ERP-CCK: 5.5 and 11 ERP-OFDM: 6, 9, 12, 18, 24, 36, 48, and 54 ERP-PBCC: 5.5, 11, 22, and 33 DSSS-OFDM: 6, 9, 12, 18, 24, 36, 48, and 54.
LENGTH	The length of the PSDU in octets. Range: 1–4095.
PREAMBLE_TYPE	The preamble type detected during reception of the PPDU. Enumerated type for which the allowed value depends on value of MODULATION parameter: ERP-OFDM: null ERP-DSSS, ERP-CCK, ERP-PBCC, PBCC, DSSS-OFDM: SHORTPREAMBLE, LONGPREAMBLE.
MODULATION	The modulation used for the reception of this PSDU. Enumerated types: ERP-DSSS, ERP-CCK, ERP?OFDM, ERP-PBCC, DSSS-OFDM.
SERVICE	Null.
RSSI	The RSSI is a measure of the RF energy received by the ERP. The 8-bit value is in the range of 0 to RSSI maximum as described in 17.2.3.2.

19.3 Extended Rate PLCP sublayer

19.3.1 Introduction

This subclause provides a PHY layer convergence procedure (PLCP) for the ERP. The convergence procedure specifies how PSDUs are converted to and from PPDUs at the transmitter and receiver. The PPDU is formed during data transmission by appending the PSDU to the Extended Rate PLCP preamble and header. At the receiver, the PLCP preamble and header are processed to aid in the demodulation and delivery of the PSDU.

19.3.2 PPDU format

An ERP STA shall support three different preamble and header formats. The first is the Long Preamble and header described in 19.3.2.1 (and based on 18.2.2.1 with redefinition of reserved bits defined therein). This PPDU provides interoperability with Clause 18 STAs when using the 1, 2, 5.5, and 11 Mbit/s data rates; the optional DSSS-OFDM modulation at all OFDM rates; and the optional ERP-PBCC modulation at all ERP-PBCC rates. The second is the Short Preamble and header described in 19.3.2.2 (and based on 18.2.2.2 wherein it is optional). The short preamble supports the rates 2, 5.5, and 11 Mbit/s as well as DSSS-OFDM and ERP-PBCC. The third is the ERP-OFDM preamble and header specified in 19.3.2.3 (and based on 17.3.2). The ERP has two optional PPDU formats, described in 19.3.2.4 and 19.3.2.5, to support the optional DSSS-OFDM modulation rates.

 Copyright © 2003 IEEE. All rights reserved.

Authorized licensed use limited to: [redacted] Downloaded on January 16,2023 at 15:46:33 UTC from IEEE Xplore. Restrictions apply.

DELL
EXHIBIT 1019 - PAGE 29

19.3.2.1 Long preamble PPDU format

Figure 131 of 18.2.2.1 shows the basic format for the long preamble PPDU. This preamble is appropriate for use with the 1, 2, 5.5, and 11 Mbit/s (Clause 18) modes and is compatible with BSSs using these modes. To support the optional modes included in the ERP, the Long Preamble PPDU only differs from 18.2.2.1 in the following:

a) The use of one bit in the SERVICE field to indicate when the optional ERP-PBCC mode is being used.
b) The use of two additional bits in the SERVICE field to resolve the length ambiguity when the optional ERP-PBCC-22 and ERP-PBCC-33 modes are being used.
c) Three additional optional rates given by the following SIGNAL field octets where the lsb is transmitted first in time:
   1) X'DC' (msb to lsb) for 22 Mbit/s ERP-PBCC
   2) X'21' (msb to lsb) for 33 Mbit/s ERP-PBCC
   3) X'1E' (msb to lsb) for all DSSS-OFDM rates

Three bits of the SERVICE field have been defined to support the optional modes of the ERP standard. Table 123C shows graphically the assignment of the bits within the SERVICE field. The bits b0, b1, and b4 are reserved and shall be set to 0. Bit b2 is used to indicate that the transmit frequency and symbol clocks are derived from the same oscillator. For all ERP systems, the Locked Clock Bit shall be set to 1. Bit b3 is used to indicate if the data are modulated using the optional ERP-PBCC modulation. Bit b3 is defined in 18.2.3.4 with the caveat that the ERP-PBCC mode now has the additional optional rates of 22 and 33 Mbit/s as defined in 19.3.3.2. Bits b5, b6, and b7 are used to resolve data field length ambiguities for the optional ERP-PBCC-11 through ERP-PBCC-33 modes. These bits are fully defined in 19.6. Bit b7 is also used to resolve data field length ambiguities for the CCK 11 Mbit/s mode and is defined in 18.2.3.5. Bits b3, b5, and b6 are set to 0 for CCK.

Table 123C—SERVICE field bit definitions

b0	b1	b2	b3	b4	b5	b6	b7
Reserved	Reserved	Locked Clock Bit 0 = not locked 1 = locked	Modulation Selection 0 = Not ERP-PBCC 1 = ERP-PBCC	Reserved	Length Extension Bit (ERP-PBCC)	Length Extension Bit (ERP-PBCC)	Length Extension Bit

19.3.2.1.1 ERP PLCP length field calculation

For the long and short preamble modes other than PBCC, the length field shall be calculated as in 18.2.3.5.

19.3.2.1.2 ERP-PBCC PLCP length (LENGTH) field calculation

For the ERP-PBCC PLCP length field, the transmitted value shall be determined from the LENGTH and DataRate parameters in the TXVECTOR issued with the PMD-TXSTART.request primitive described in 18.4.5.6.

The length field provided in the TXVECTOR is in octets and is converted to microseconds for inclusion in the PLCP LENGTH field. The Length Extension bits are provided to resolve the ambiguity in the number of octets that is described by an integer number of microseconds for any data rate over 8 Mb/s. These bits are used to indicate which of the smaller potential number of octets is correct.

Copyright © 2003 IEEE. All rights reserved.

Authorized licensed use limited to: [redacted] Downloaded on January 16,2023 at 15:46:33 UTC from IEEE Xplore. Restrictions apply.

DELL
EXHIBIT 1019 - PAGE 30

— 11 Mbit/s PBCC see 18.2.3.5.

— 22 Mbit/s ERP-PBCC Length = (number of octets + 1)*4/11, rounded up to the next integer; the SERVICE field b6 and b7 bits shall each indicate a 0 if the rounding took less than 4/11ths; the SERVICE field bit b6 shall indicate a 0 and the SERVICE field bit b7 shall indicate a 1 if the rounding took 4/11ths or more and less than 8/11ths; and the SERVICE field bit b6 shall indicate a 1 and the SERVICE field bit b7 shall indicate a 0 if the rounding took 8/11ths or more.

— 33 Mbit/s ERP-PBCC Length = (number of octets + 1)*8/33, rounded up to the next integer; the SERVICE field b5, b6, and b7 bits shall each indicate a 0 if the rounding took less than 8/33; the SERVICE field bit b5 shall indicate a 0, b6 shall indicate a 0, and the SERVICE field bit b7 shall indicate a 1 if the rounding took more than or equal to 8/33 and less than 16/33; the SERVICE field bit b5 shall indicate 0, b6 shall indicate a 1, and b7 shall indicate a 0 if the rounding took more than or equal to 16/33 and less than 24/33; the SERVICE field bit b5 shall indicate 0, b6 shall indicate a 1, and b7 shall indicate a 1 if the rounding took more than or equal to 24/33 and less than 32/33; the SERVICE field bit b5 shall indicate 1, b6 shall indicate a 0, and b7 shall indicate a 0 if the rounding took 32/33 or more.

At the receiver, the number of octets in the MPDU is calculated as follows:

— 22 Mbit/s ERP-PBCC Number of octets = (Length * 11/4) – 1, rounded down to the next integer, minus 1 if the SERVICE field bit b6 is a 0 and the SERVICE field bit b7 is a 1, or minus 2 if the SERVICE field bit b6 is a 1 and the SERVICE field bit b7 is a 0.

— 33 Mbit/s ERP-PBCC Number of octets = (Length * 33/8) – 1, rounded down to the next integer, minus 1 if the SERVICE field bit b5 is a 0, b6 is a 0, and the SERVICE field bit b7 is a 1, or minus 2 if the SERVICE field bit b5 is a 0, b6 is a 1, and the SERVICE field bit b7 is a 0, or minus 3 if the SERVICE field bit b5 is a 0, b6 is a 1, and the SERVICE field bit b7 is a 1, or minus 4 if the SERVICE field bit b5 is a 1, b6 is a 0, and the SERVICE field bit b7 is a 0.

Table 123D shows an example calculation for several packet lengths of ERP-PBCC at 22 Mbit/s.

Table 123D—Example of LENGTH calculations for ERP-PBCC-22

TX Octets	(Octets+1) * 4/11	LENGTH	Length Extension bit b6	Length Extension bit b7	LENGTH *11/4	floor(X)	RX Octets
1023	372.364	373	0	1	1025.75	1025	1023
1024	372.727	373	0	0	1025.75	1025	1024
1025	373.091	374	1	0	1028.50	1028	1025
1026	373.455	374	0	1	1028.50	1028	1026

19.3.2.2 Short preamble PPDU format

Figure 132 of 18.2.2.2 shows the basic format for the short preamble PPDU. For the ERP, support for this preamble is mandatory. The short preamble is appropriate for use with 2, 5.5, and 11 Mbit/s modes. The bits of the Short PLCP SERVICE field and RATE field are the same as for the Long PLCP SERVICE field and RATE field and are defined in 19.3.2.1.

19.3.2.3 ERP-OFDM PPDU format

The format, preamble, and headers for the ERP-OFDM PLCP PPDU are described in 17.3.2 through 17.3.5. For the ERP-OFDM modes, the DATA Field that contains the SERVICE field, the PSDU, the TAIL bits, and the PAD bits shall follow 17.3.5.

Copyright © 2003 IEEE. All rights reserved.

Authorized licensed use limited to: [redacted] Downloaded on January 16,2023 at 15:46:33 UTC from IEEE Xplore. Restrictions apply.

DELL
EXHIBIT 1019 - PAGE 31

For ERP-OFDM modes, an ERP packet is followed by a period of no transmission with a length of 6 µs called the signal extension. The purpose of this extension is to make the TXTIME calculation in 19.8.3 result in a transmission duration interval that includes an additional 6 µs. The SIFS time for Clause 17 packets is 16 µs, and the SIFS time for Clause 18 packets is 10 µs. The longer SIFS time in Clause 17 is to allow extra time for the convolutional decode process to finish. As Clause 19 packets will use a SIFS time of 10 µs, this extra 6 µs length extension is used to ensure that the Transmitter computes the Duration field in the MAC header incorporating the 6 µs of "idle time" following each ERP-OFDM transmission. This ensures that the NAV value of Clause 18 STAs is set correctly.

The "carrier-sense mechanism" described in 9.2.1 combines the NAV state and the STA's transmitter status with physical carrier sense to determine the busy/idle state of the medium. The time interval between frames is called the inter-frame spacing (IFS). A STA shall determine that the medium is idle through the use of the CCA mechanism for the interval specified. The starting reference of slot boundaries is the end of the last symbol of the previous frame on the medium. For ERP-OFDM frames, this includes the length extension. For ERP-OFDM frames, a STA shall generate the PHY RX_END indication, 6 µs after the end of the last symbol of the previous frame on the medium. This adjustment shall be performed by the STA based on local configuration information set using the PLME SAP.

19.3.2.4 DSSS-OFDM long preamble PPDU format

Both long and short preambles and headers as previously described in 19.3.2.1 and 19.3.2.2 are used with DSSS-OFDM.

For all DSSS-OFDM rates and preamble modes, the PLCP SIGNAL Field described in 18.2.3.3 shall be set to a 3 Mbit/s value. That is, the eight-bit value is set to X'1E' (msb to lsb). For DSSS-OFDM, this value is simply a default setting used for BSS compatibility and to ensure that NonERP stations read the length field and defer the medium for that time even though they cannot demodulate the MPDU due to unsupported rates.

Figure 153A shows the PPDU format for the long preamble case. As seen, the PSDU is appended to the PLCP Preamble and the PLCP header. The PLCP Preamble is the same as described in 18.2.3.1 and 18.2.3.2. The PLCP header is similar to the one described in 19.3.2.1. The PSDU has a format that is nearly identical to a Clause 17 PLCP. The differences are described in 19.3.3.4.

The scrambler of 18.2.4 is used to scramble the DSSS-OFDM PLCP header, and the scrambler in 17.3.5.4 is used to scramble the data symbols in the OFDM segment.

19.3.2.4.1 DSSS-OFDM PLCP length field calculation

For both the long and the short preamble PLCP cases, the length field calculation in terms of data packet length is as follows:

LENGTH = PSDUsyncOFDM + PSDUSignalOFDM + …
4 × Ceiling((PLCPServiceBits + 8 × (NumberOfOctets) + PadBits) / NDBPS) + SignalExtension

where

PSDUsyncOFDM is 8 µs (OFDM long training symbols),
PSDUSignalOFDM is 4 µs,
Ceiling is a function that returns the smallest integer value greater than or equal to its argument value,
PLCPServiceBits is 8 bits,
NumberOfOctets is the number of data octets in the PSDU,
PadBits is 6 bits,
N_{DBPS} is the number of data bits per OFDM symbol,
SignalExtension is 6 µs.

Copyright © 2003 IEEE. All rights reserved.

Authorized licensed use limited to: [redacted] Downloaded on January 16,2023 at 15:46:33 UTC from IEEE Xplore. Restrictions apply.

DELL
EXHIBIT 1019 - PAGE 32

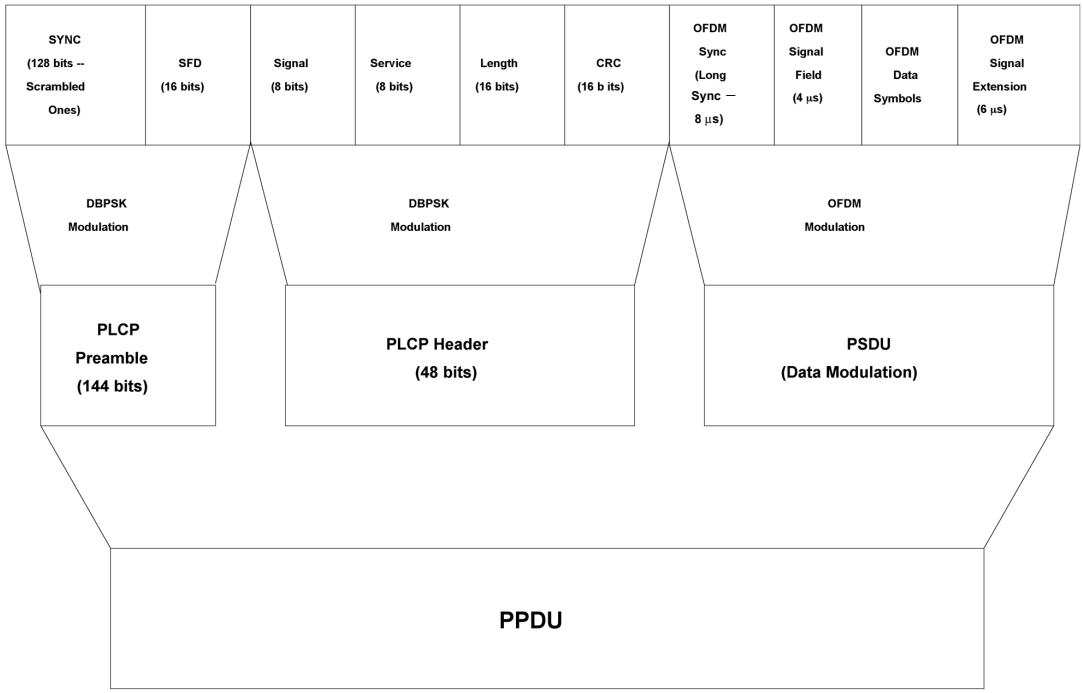

Figure 153A—Long preamble PPDU format for DSSS-OFDM

The length field is defined in units of microseconds and shall correspond to the calculated length of the PSDU. Note that the length extension bits in the Signal field are not needed or used for DSSS-OFDM.

19.3.2.5 Short DSSS-OFDM PLCP PPDU format

The short PLCP preamble and header are used to maximize the throughput by reducing the overhead associated with the preamble and header. Figure 153B shows the short preamble PLCP PPDU format. As seen, the PSDU is appended to the PLCP Preamble and the PLCP header. The short PLCP Preamble is described in 18.2.3.8 and 18.2.3.9. The PLCP header is as described in 19.3.2.4. The PSDU has a format that is nearly identical to Clause 17 PLCP. The differences are described in 19.3.3.4.

19.3.3 PLCP data modulation and rate change

19.3.3.1 Long and short preamble formats

The long and short PLCP preamble and the long PLCP header shall be transmitted using the 1 Mbit/s DBPSK modulation. The short PLCP header shall be transmitted using the 2 Mbit/s modulation. The SIGNAL and SERVICE fields combined shall indicate the modulation and rate that shall be used to transmit the PSDU. The transmitter and receiver shall initiate the modulation and rate indicated by the SIGNAL and SERVICE fields, starting with the first octet of the PSDU. The PSDU transmission rate shall be set by the DATARATE parameter in the TXVECTOR, issued with the PHY-TXSTART.request primitive described in 18.4.5.1.

Four modulation formats are mandatory, 1 and 2 Mbit/s ERP-DSSS and 5.5 and 11 Mbit/s ERP-CCK, and they are specified in 18.4.6.3.

 Copyright © 2003 IEEE. All rights reserved.

Authorized licensed use limited to: [redacted] Downloaded on January 16,2023 at 15:46:33 UTC from IEEE Xplore. Restrictions apply.

DELL
EXHIBIT 1019 - PAGE 33

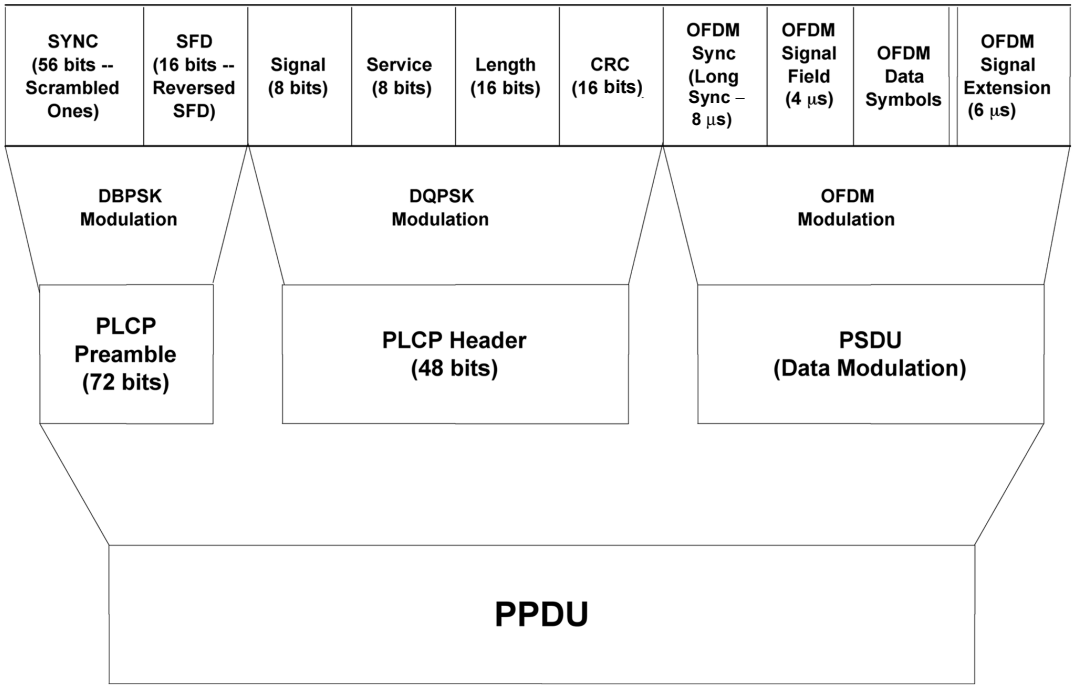

Figure 153B—Short preamble PPDU format for DSSS-OFDM

Four optional ERP-PBCC modulation formats and data rates are specified for the Enhanced Rate PHY (ERP). They shall be based on Packet Binary Convolutional Coding (PBCC) 5.5, 11, 22, and 33 Mbit/s modulations. The rates of 5.5 and 11 Mbit/s are described in 18.4.6.6. No change in the spectral mask of 18.4.7.3 is required for these modes.

19.3.3.2 ERP-PBCC 22 Mbit/s and 33 Mbit/s formats

In the PBCC encoder, incoming data are first encoded with a packet binary convolutional code. A cover code (as defined in PBCC modes in 18.4.6.6) is applied to the encoded data prior to transmission through the channel.

The packet binary convolutional code that is used is a 256-state, rate 2/3 code. The generator matrix for the code is given in Equation (37).

$$G = \begin{bmatrix} 1+D^4 & D & D+D^3 \\ D^3 & 1+D^2+D^4 & D+D^3 \end{bmatrix} \tag{37}$$

In octal notation, the generator matrix is given in Equation (38).

$$G = \begin{bmatrix} 21 & 2 & 12 \\ 10 & 25 & 12 \end{bmatrix} \tag{38}$$

Copyright © 2003 IEEE. All rights reserved.

Authorized licensed use limited to: [redacted] Downloaded on January 16,2023 at 15:46:33 UTC from IEEE Xplore. Restrictions apply.

As the system is frame (PPDU) based, the encoder shall be in state zero; i.e., all memory elements contain zero, at the beginning of every PPDU. The encoder shall also be placed in a known state at the end of every PPDU to prevent the data bits near the end of the PPDU from being decoded incorrectly. This is achieved by appending one octet containing all zeros to the end of the PPDU prior to transmission and discarding the final octet of each received PPDU.

An encoder block diagram is shown in Figure 153C. It consists of two paths of four memory elements each. For every pair of data bits input, three output bits are generated. The output of the convolutional code is mapped to an 8-PSK constellation; each 3-bit output sequence from the packet binary convolutional encoder is used to produce one symbol. This yields a throughput of two information bits per symbol. In ERP-PBCC-22 and ERP-PBCC-33, the input data stream is divided into pairs of adjacent bits. In each pair, the first bit is fed to the upper input of the convolutional encoder, and the second is fed to the lower input of the convolutional encoder. An illustration of the mapping for the jth (j≥0) pair of input bits (b2j, b2j+1) is given in Figure 153C.

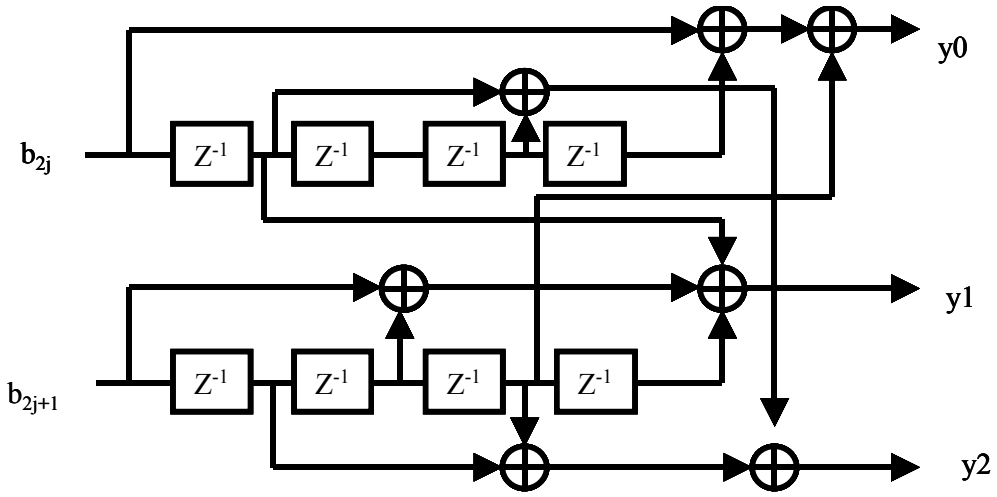

Figure 153C—22/33 Mbit/s ERP-PBCC convolutional encoder

The phase of the first complex chip of the 22 Mbit/s PSDU shall be defined with respect to the phase of the last chip of the PCLP header, i.e., the last chip of the CRC check. The phase of the first complex chip of the 33 Mb/s PSDU shall be defined with respect to the phase of the last chip of the clock switch section, i.e., the last chip of the ReSync field. The bits (y2 y1 y0) = (0,0,0) shall indicate the same phase as the last chip of the CRC check. The other seven combinations of (y2 y1 y0) shall be defined with respect to this reference phase as shown in Figure 153D.

The mapping from BCC outputs to 8-PSK constellation points is determined by a pseudo-random cover sequence. The cover sequence is the same one as described in 18.4.6.6. The current binary value of this sequence at every given point in time is taken as shown in Figure 153D. The mapping is shown in Figure 153D.

ERP-PBCC mode achieves a 33 Mbit/s data rate by using a 16.5 MHz clock for the data portion of the packet. The data portion is otherwise identical to the 22 Mbit/s ERP-PBCC modulations. The structure and clock speed of the preamble is the same as in Clause 18. An extra clock switch section between the preamble and the data portion is added, with the format described below. The same pulse shape shall be used in each clock domain.

 Copyright © 2003 IEEE. All rights reserved.

Authorized licensed use limited to: [redacted] Downloaded on January 16,2023 at 15:46:33 UTC from IEEE Xplore. Restrictions apply.

DELL
EXHIBIT 1019 - PAGE 35

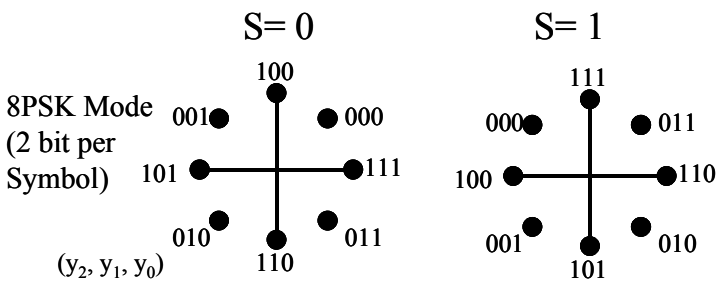

Figure 153D—ERP-PBCC-22 and ERP-PBCC-33 cover code mapping

When the clock is switched from 11 MHz to 16.5 MHz, the clock switching structure in Figure 153E is used.

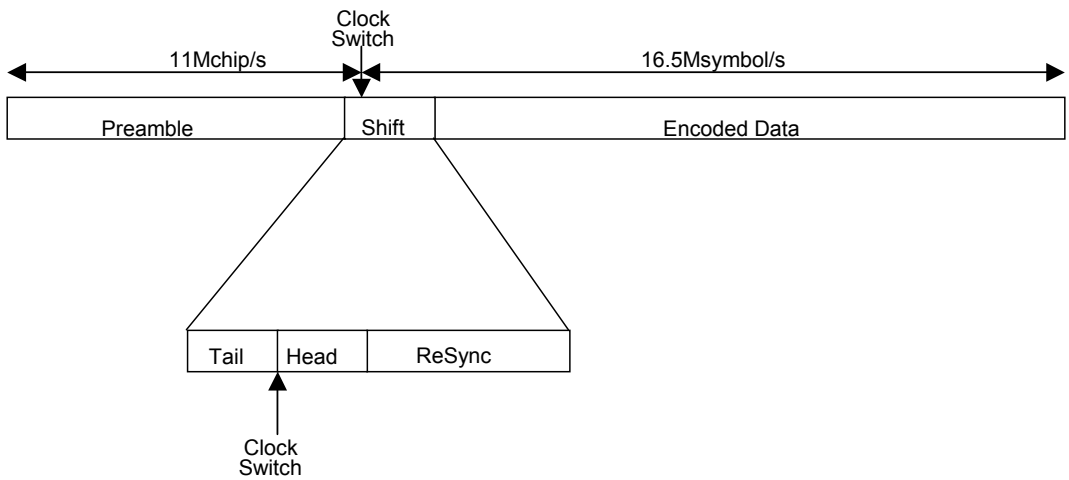

Figure 153E—33 Mbit/s clock switching

The tail is 3 clock cycles at 11 Mchip/s and the head is 3 clock cycles at 16.5 Msymbol/s (QPSK). The resync is 9 clock cycles at 16.5 Msymbol/s. The total clock switching time (tail and head and resync) is 1 µs. The tail bits are 1 1 1, the head bits are 0 0 0, and the resync bits are 1 0 0 0 1 1 1 0 1. The modulation is BPSK, which is phase synchronous with the previous symbol.

19.3.3.3 ERP-OFDM format

PLCP modulation and rate change for the ERP-OFDM frame format follows 17.3.7.

19.3.3.4 Long & short DSSS-OFDM PLCP format

The scrambler of 18.2.4 is used to scramble the DSSS-OFDM PLCP header, and the scrambler in 17.3.5.4 is used to scramble the data symbols in the OFDM segment.

Copyright © 2003 IEEE. All rights reserved.

Authorized licensed use limited to: [redacted] Downloaded on January 16,2023 at 15:46:33 UTC from IEEE Xplore. Restrictions apply.

19.3.3.4.1 Overview of the DSSS-OFDM PLCP PSDU encoding process

This subclause contains the definitions and procedure for forming the PSDU portion of the DSSS-OFDM PLCP. Figure 153F shows an expanded view of the DSSS-OFDM PSDU. The PSDU is composed of four major sections. The first is the long sync training sequence that is used for acquisition of receiver parameters by the OFDM demodulator. The long sync training sequence for DSSS-OFDM is identical to the long training symbols described in 17.3.3. The second section is the OFDM SIGNAL field that provides the demodulator information on the OFDM data rate and length of the OFDM data section. The SIGNAL field for DSSS-OFDM is identical to the SIGNAL field described in 17.3.4. After the SIGNAL field is the data section of the PSDU. This is identical to the modulation procedure described in 17.3.2.1 in steps (c) through (m). After the data section, the PSDU for DSSS-OFDM appends a signal extension section to provide additional processing time for the OFDM demodulator. This signal extension is a period of no transmission as described in 19.3.3.4.5.

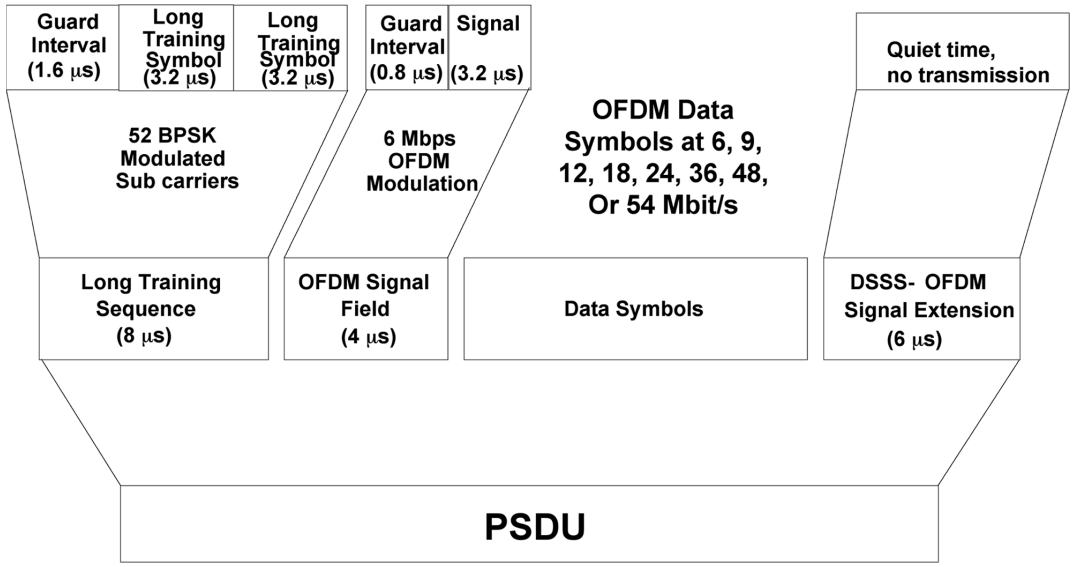

Figure 153F—DSSS-OFDM PSDU

19.3.3.4.2 Long sync training sequence definition

The Long Sync Training Sequence is defined in 17.3.3.

19.3.3.4.3 OFDM signal field definition

The DSSS-OFDM Signal Field is defined in 17.3.4. Note that the length conveyed by the SIGNAL field is calculated as described in 17.3.4. That is, the length conveyed by this field does not include the signal extension described in 19.3.3.4.5.

19.3.3.4.4 Data symbol definition

The same process as steps (c) through (m) of 17.3.2.1 is used to encode the data symbols' portion of the DSSS-OFDM PSDU.

Copyright © 2003 IEEE. All rights reserved.

Authorized licensed use limited to: [redacted] Downloaded on January 16,2023 at 15:46:33 UTC from IEEE Xplore. Restrictions apply.

DELL
EXHIBIT 1019 - PAGE 37

19.3.3.4.5 DSSS-OFDM signal extension

The DSSS-OFDM Signal Extension shall be a period of no transmission of 6 µs length. It is inserted to allow more time to finish the convolutional decoding of the OFDM segment waveform and still meet the 10 µs SIFS requirement of the ERP.

19.3.4 PLCP transmit procedure

The transmit procedure will depend on the data rate and modulation format requested. For data rates of 1, 2, 5.5, 11, 22, and 33 Mbit/s, the PLCP transmit procedure shall follow 18.2.5. For the ERP_OFDM rates of 6, 12, and 24 and the rates of 9, 18, 36, 48, and 54 Mbit/s, the PLCP transmit procedure shall follow 17.3.11.

The transmit procedures for the optional DSSS-OFDM mode using the long or short PLCP preamble and header are the same as those described in 18.2.5, and they do not change apart from the ability to transmit a higher rate PSDU using DSSS-OFDM.

19.3.5 CCA

The PLCP shall provide the capability to perform a clear channel assessment (CCA) and report the results of the assessment to the MAC. The CCA mechanism shall detect a “medium busy” condition for all supported preamble and header types. That is, the CCA mechanism shall detect that the medium is busy for the PLCP PPDUs specified in 17.3.3 and 18.2.2. The CCA mechanism performance requirements are given in 19.4.6.

The ERP shall provide the capability to perform CCA according to the following method:

> **CCA Mode** (ED and CS): A combination of carrier sense (CS) and energy above threshold. CCA shall have a mechanism for carrier sense that will detect all mandatory Clause 19 sync symbols. This CCA’s mode’s carrier sense shall include both Barker code sync detection and OFDM sync symbol detection. CCA shall report busy at least while a PPDU with energy above the ED threshold is being received at the antenna.

The energy detection status shall be given by the PMD primitive, PMD_ED. The carrier sense status shall be given by PMD_CS. The status of PMD_ED and PMD_CS is used in the PLCP convergence procedure to indicate activity to the MAC through the PHY interface primitive, PHY-CCA.indicate. A busy channel shall be indicated by PHY-CCA.indicate of class BUSY. A clear channel shall be indicated by PHY-CCA.indicate of class IDLE.

19.3.6 PLCP receive procedure

This describes the procedure used by receivers of the ERP. An ERP receiver shall be capable of receiving 1, 2, 5.5, and 11 Mbit/s PLCPs using either the long or short preamble formats described in Clause 18 and shall be capable of receiving 6, 12, and 24 Mbit/s using the modulation and preamble described in Clause 17. The PHY may also implement the ERP-PBCC modulation at rates of 5.5, 11, 22, and 33 Mbit/s; the ERP-OFDM modulations at rates of 9, 18, 36, 48, and 54 Mbit/s; and/or the DSSS-OFDM modulation rates of 6, 9, 12, 18, 24, 36, 48, and 54 Mbit/s. The receiver shall be capable of detecting the preamble type (ERP-OFDM, Short Preamble, or Long Preamble) and the modulation type. These values shall be reported in the RXVECTOR (see 19.2).

Upon the receipt of a PPDU, the receiver shall first distinguish between the ERP-OFDM preamble and the single carrier modulations (long or short preamble). In the case where the preamble is an ERP-OFDM preamble, the PLCP Receive Procedure shall follow the procedure described in 17.3.12. Otherwise, the receiver shall then distinguish between the long preamble and short preamble as specified in 18.2.2. The receiver shall then demodulate the SERVICE field to determine the modulation type as specified in 19.3.2.1 or 19.3.2.2. For short preamble and long preamble using ERP-DSSS, ERP-CCK, or ERP-PBCC modulations, the receiver shall then follow the receive procedure described in 18.2.6.

Copyright © 2003 IEEE. All rights reserved.

Authorized licensed use limited to: [redacted] Downloaded on January 16,2023 at 15:46:33 UTC from IEEE Xplore. Restrictions apply.

DELL
EXHIBIT 1019 - PAGE 38

A receiver that supports DSSS-OFDM is capable of receiving all rates specified in Clause 15 and all mandatory rates in Clause 17 and Clause 18. If the SIGNAL field indicates 3 Mbit/s, the receiver shall attempt to receive a DSSS-OFDM packet. The remaining receive procedures for a DSSS-OFDM-capable receiver are the same as those described in 18.2.6, and they do not change apart from the ability to receive DSSS-OFDM in the PSDU. If DSSS-OFDM is being received, the receiver shall handle the modulation transition requirements as described in 19.7.2. The receiver shall then follow the receive procedure described in 17.3.12.

19.4 ERP PMD operating specifications (general)

Subclauses 19.4.1 through 19.4.7 provide general specifications for the ERP PMD sublayers. These specifications are based on 17.3.8 except where noted.

19.4.1 Regulatory requirements

All systems shall comply with the local regulatory requirements for operation in the 2.4 GHz band. For the USA, refer to FCC 15.247, 15.249, 15.205, and 15.209. For Europe, refer to ETS 300-328. For Japan, refer to MPHPT article 49-20.

19.4.2 Operating channel frequencies

The ERP shall operate in the frequency ranges specified in 18.4.6.2, as allocated by regulatory bodies in the USA, Europe, and Japan. OFDM operation in channel 14 may not be allowed in Japan. The channel numbering and the number of operating channels shall follow Table 105 of 18.4.6.2.

19.4.3 Transmit and receive in-band and out-of-band spurious emissions

The ERP shall conform to in-band and out-of-band spurious emissions as set by the appropriate regulatory bodies for the 2.4 GHz band.

19.4.4 Slot time

The slot time is 20 µs, except that an optional 9 µs slot time may be used when the BSS consists of only ERP STAs capable of supporting this option. The optional 9 µs slot time shall not be used if the network has one or more non-ERP STAs associated. For IBSS, the Short Slot Time subfield shall be set to 0, corresponding to a 20 µs slot time.

19.4.5 SIFS value

The ERP shall use a SIFS of 10 µs.

19.4.6 CCA performance

The CCA shall indicate TRUE if there is no CCA “medium busy” indication. The CCA parameters are subject to the following criteria:

a) When a valid signal with a signal power of –76 dBm or greater at the receiver antenna connector is present at the start of the PHY slot, the receiver's CCA indicator shall report the channel busy with probability CCA_Detect_Probabilty within a CCA_Time. CCA_Time is SlotTime – RxTxTurnaroundTime. CCA_Detect_Probabilty is the probability that the CCA does respond correctly to a valid signal. The values for these parameters are found in Table 123E. Note that the CCA Detect Probability and the power level are performance requirements.

 Copyright © 2003 IEEE. All rights reserved.

Authorized licensed use limited to: [redacted] Downloaded on January 16,2023 at 15:46:33 UTC from IEEE Xplore. Restrictions apply.

DELL
EXHIBIT 1019 - PAGE 39

b) In the event that a correct PLCP header is received, the ERP PHY shall hold the CCA signal inactive (channel busy) for the full duration, as indicated by the PLCP LENGTH field. Should a loss of carrier sense occur in the middle of reception, the CCA shall indicate a busy medium for the intended duration of the transmitted PPDU.

Table 123E—CCA parameters

Parameter	Slot time = 20 µs	Slot time = 9 µs
SlotTime	20 µs	9 µs
RxTxTurnaroundTime	5 µs	5 µs
CCA_Time	15 µs	4 µs
CCA_Detect_Probability	> 99%	>90%

19.4.7 PMD transmit specifications

The PMD transmit specifications shall follow 17.3.9 with the exception of the transmit power level (17.3.9.1), the transmit center frequency tolerance (17.3.9.4), and the symbol clock frequency tolerance (17.3.9.5). Regulatory requirements may have an effect on the combination of maximum transmit power and spectral mask if the resulting signals violate restricted band emission limits.

19.4.7.1 Transmit power levels

The maximum transmit power level shall meet the requirements of the local regulatory body. For examples, see Table 115 in 18.4.7.1.

19.4.7.2 Transmit center frequency tolerance

The transmit center frequency tolerance shall be ±25 PPM maximum. The transmit center frequency and symbol clock frequency shall be derived from the same reference oscillator (locked).

19.4.7.3 Symbol clock frequency tolerance

The symbol clock frequency tolerance shall be ±25 PPM maximum. The transmit center frequency and symbol clock frequency shall be derived from the same reference oscillator (locked oscillators). This means that the error in PPM for the carrier and the symbol timing shall be the same.

19.5 ERP operation specifications

This subclause describes the receive specifications for the PMD sublayer. The receive specification for the ERP-OFDM modes shall follow 17.3.10 with the exception of the receiver maximum input level (17.3.10.4) and the adjacent channel rejection (17.3.10.2). The receive specifications for the ERP-DSSS modes shall follow 18.4.8 with the exception of the receiver maximum input level (18.4.8.2).

19.5.1 Receiver minimum input level sensitivity

The packet error rate (PER) of the ERP-OFDM modes shall be less than 10% at a PSDU length of 1000 bytes for the input levels of Table 91 of 17.3.10. Input levels are specific for each data rate and are measured at the antenna connector. A noise figure (NF) of 10 dB and an implementation loss of 5 dB are assumed. The PER of the ERP-DSSS modes shall be as specified in 18.4.8.1.

Copyright © 2003 IEEE. All rights reserved.

Authorized licensed use limited to: [redacted] Downloaded on January 16,2023 at 15:46:33 UTC from IEEE Xplore. Restrictions apply.

19.5.2 Adjacent channel rejection

Adjacent channels at 2.4 GHz are defined to be at ±25 MHz spacing. The adjacent channel rejection shall be measured by setting the desired signal's strength 3 dB above the rate-dependent sensitivity specified in Table 91 of 17.3.10 and raising the power of the interfering signal until 10% PER is caused for a PSDU length of 1000 bytes. The power difference between the interfering and the desired channel is the corresponding adjacent channel rejection. The interfering signal in the adjacent channel shall be a conformant OFDM signal, unsynchronized with the signal in the channel under test. For an OFDM PHY, the corresponding rejection shall be no less than specified in Table 91 of 17.3.10.

The alternative adjacent channel rejection of Table 91 shall not be required for the ERP.

The adjacent channel rejection of the ERP-DSSS modes shall follow 18.4.8.3.

19.5.3 Receive maximum input level capability

The PER shall be less than 10% at a PSDU length of 1000 bytes for an input level of –20 dBm measured at the antenna connector for any supported modulation signal or data rate (i.e., 1, 2, 5.5, 6, 9, 11, 12, 18, 22, 24, 33, 36, 48, 54 Mbit/s).

19.5.4 Transmit spectral mask

The transmit spectral mask for the ERP-OFDM modes shall follow 17.3.9.2 and is shown in Figure 124 therein. The transmit spectral mask for the ERP-DSSS modes shall follow 18.4.7.3 and is shown in Figure 149 therein.

19.6 ERP-PBCC operation specifications

The ERP-PBCC receiver specifications shall follow 18.4.8 except as noted.

These optional modes provide systems the ability to achieve data rates of 22 and 33 Mbit/s in modes that are fully backwards compatible with Clause 15 and Clause 18 BSSs without requiring additional coordination or protection mechanisms. In addition, the 22 Mbit/s ERP-PBCC mode is spectrally identical to Clause 18 BSSs. Four optional ERP-PBCC modulation formats and data rates are specified for the ERP. They shall be based on Packet Binary Convolutional Coding (PBCC) 5.5, 11, 22, and 33 Mbit/s modulations. The rates of 5.5 and 11 Mbit/s are described in 18.4.6.6.

19.6.1 Receiver minimum input level sensitivity

For the 22 Mbit/s ERP-PBCC mode, the frame error ratio shall be less than 8×10^{-2} at a PSDU length of 1024 octets for an input level of –76 dBm measured at the antenna connector. For the 33 Mbit/s ERP-PBCC mode, the corresponding input level shall be –74 dBm.

19.6.2 Receiver adjacent channel rejection

The adjacent channel rejection shall be equal to or better than 35 dB, with an FER of 8×10^{-2} using ERP-PBCC modulation and a PSDU length of 1024 octets. The adjacent channel rejection shall be measured using the following method. Input an ERP-PBCC modulated signal of the same rate at a level 6 dB greater than specified in 19.6.1. In an adjacent channel (25 MHz separation as defined by the channel numbering), input a signal modulated in a similar fashion, which adheres to the transmit mask specified in 18.4.7.3, to a level 41 dB above the level specified in 19.6.1. The adjacent channel signal shall be derived from a separate signal source. It shall not be a frequency-shifted version of the reference channel. Under these conditions, the FER shall be no worse than 8×10^{-2}.

Copyright © 2003 IEEE. All rights reserved.

Authorized licensed use limited to: [redacted] Downloaded on January 16,2023 at 15:46:33 UTC from IEEE Xplore. Restrictions apply.

DELL
EXHIBIT 1019 - PAGE 41

19.7 DSSS-OFDM operation specifications

This optional mode provides systems the ability to use OFDM in a mode that is fully compatible with Clause 15 and Clause 18 BSSs without requiring additional coordination. That is, it does not need a protection mechanism. This compatibility requires the use of Clause 18 long and short preambles and inclusion of a signal extension field to match SIFS spacing of Clause 18 systems. By reusing the Clause 18 preambles, this optional mode ensures that the Clause 18 CCA and short inter-frame spacing interval (SIFS) function properly when ERP and NonERP STAs interoperate. When this option is enabled, the same rates shall be supported in both ERP-OFDM and DSSS-OFDM. The DSSS-OFDM PMD transmit and receive specifications shall follow the related ERP-OFDM specifications in 19.5.

19.7.1 Overview

This optional extension of the DSSS system builds on the payload data rates of 1, 2, 5.5, and 11 Mbit/s, as described in Clause 18, to provide 6, 9, 12, 18, 24, 36, 48, and 54 Mbit/s payload data rates while reusing the preambles (short and long) described by Clause 18. The capability described in this subclause is called DSSS-OFDM. This optional capability complements the Extended Rate OFDM mode described in Clause 19 by combining OFDM modulation with DSSS preambles. As a result, for DSSS-OFDM, the PPDU format described in 18.2.2 is relatively unchanged. The major change is to the format of the PSDU. The Clause 18 single carrier PSDU is replaced by a PSDU that is very similar to the PSDUs described in Clause 17. This subclause highlights the differences. In addition, 19.7.2 specifies the radio and physical layer behavior of the transition from the Barker symbol-modulated preamble and the OFDM-modulated data for PSDU.

19.7.2 Single carrier to multicarrier transition requirements

The spectrum mask for the DSSS-OFDM waveform shall meet the requirements as shown in Figure 124 of 17.3.9.6.2.

The single carrier signal segment of the packet shall have a coherent relationship with the multicarrier (OFDM) segment of the packet. All characteristics of the signal shall be transferable from one symbol to the next, even when transitioning to the OFDM segment. This enables high-performance, coherent receiver operation across the whole packet. This requirement is no different in nature than that stated in Clause 15, Clause 17, and Clause 18. The distinction being that those clauses use a signaling scheme that is either just single carrier or just multicarrier. In contrast, for this mode, both single carrier and multicarrier signaling are used within the context of a single packet.

This section specifies the coherent relationship between the single carrier segment and the OFDM segment, so that the receiver has the opportunity to track through the transition without any forced parameter reacquisition. The single carrier preamble and header provide all parametric information required for demodulation of the OFDM segment to within conventional estimation-in-noise accuracy. Although multicarrier sync features are provided for convenience at OFDM segment onset, if and how to use the multicarrier sync for reacquisition is an implementer's decision. Multicarrier sync is not necessary. The packet is coherent throughout.

As shown in Figure 153G, the ideal transition would provide a constant carrier frequency and phase, a constant power, a constant spectrum, and a constant timing relationship. Constant in this context means that the same clock crystal that sets the frequencies and timing of each part is the same through the transition. This allows the frequency and timing tracking loops to work undisturbed through the transition. The following subparagraphs establish the ideal transition characteristics for the transmit signal. An additional paragraph specifies the required implementation fidelity or accuracy.

Copyright © 2003 IEEE. All rights reserved.

Authorized licensed use limited to: [redacted] Downloaded on January 16,2023 at 15:46:33 UTC from IEEE Xplore. Restrictions apply.

DELL
EXHIBIT 1019 - PAGE 42

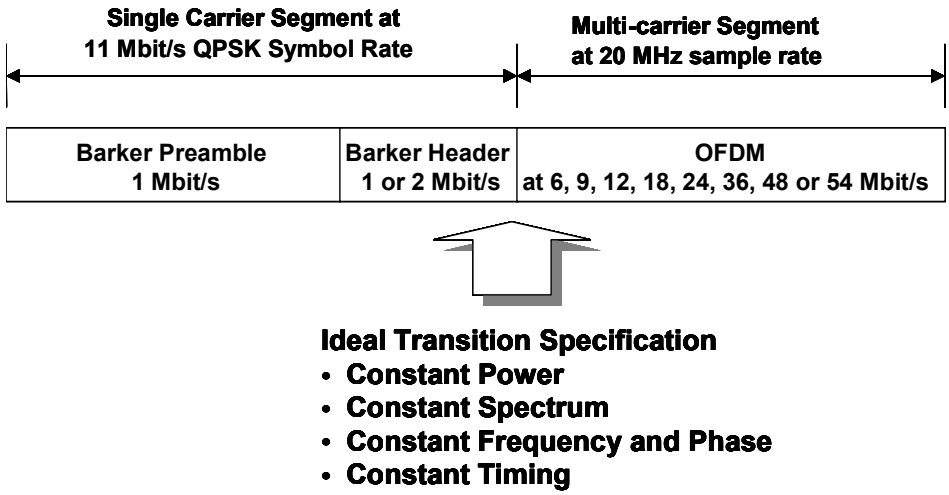

Figure 153G—Single carrier to multicarrier transition definition

19.7.2.1 Spectral binding requirement

The spectral binding requirement allows the receiver's estimate of the channel state information to be transferred from the single-carrier packet segment to the multicarrier packet segment. This requirement establishes a coherent relationship between the end-to-end frequency responses of the single carrier and multicarrier segments.

During reception of the single carrier preamble and header, the receiver may estimate the channel impulse response. In practice, this could be accomplished through Barker code correlation. The channel impulse response contains end-to-end frequency response information about the linear distortion experienced by the signal due to filters and multipath. This distortion can be mitigated with an equalizer or other commonly known techniques.

The channel impulse response estimate generated during the single carrier packet segment will include the single carrier's pulse-shaping, filter frequency response used to control the single carrier's transmit spectrum and transmit impulse response. The single carrier's pulse-shaping filter may be distinct from the shaping technique used for the multicarrier segment.

The spectral binding requirement states that the linear distortions experienced by the single carrier signal and the linear distortions experienced by the multicarrier signal have a known relationship. This relationship is defined by this specification and shall be manifested by all compliant transmit radios. This will allow any receiver to exploit channel information derived during the single carrier segment and reuse the channel information during the multicarrier segment, if desired.

Three elements have been itemized for this specification to achieve spectral binding. All three elements are necessary to achieve spectral binding, and they are discussed in the next three subclauses. The first element focuses on distortions common to both the single carrier packet segment and the multicarrier packet segment. The second element deals with pulse-shaping unique to the OFDM packet segment. The third element deals with pulse-shaping unique to the single carrier packet segment. The multicarrier pulse shape discussion precedes the single carrier's pulse shape discussion because it is believed this will be a more comfortable progression, due to similar multicarrier pulse-shaping considerations contained in Clause 17.

 Copyright © 2003 IEEE. All rights reserved.

Authorized licensed use limited to: [redacted] Downloaded on January 16,2023 at 15:46:33 UTC from IEEE Xplore. Restrictions apply.

DELL
EXHIBIT 1019 - PAGE 43

19.7.2.1.1 Common linear distortions

Separate from the single carrier and the multicarrier pulse shaping, transmit signal generation will be designed to provide linear distortion continuity to the receiver's demodulation algorithms. The common linear distortion requirement is illustrated in Figure 153H, where it is shown that the processing at the receiver assumes that the dominant linear distortions are induced on all waveform segments. The receiver observes the composite linear distortion due to imperfect transmit radio filters, due to multipath filtering, and due to imperfect receive radio filters. In general, the receiver is unable to decompose the distortion into separate physical components and is only able to observe the aggregate effect. This specification constrains only the linear distortions in the transmit radio, because that is what is necessary to ensure interoperability. The soft switch that appears in Figure 153H is a conceptual element to implement the transition, as described below.

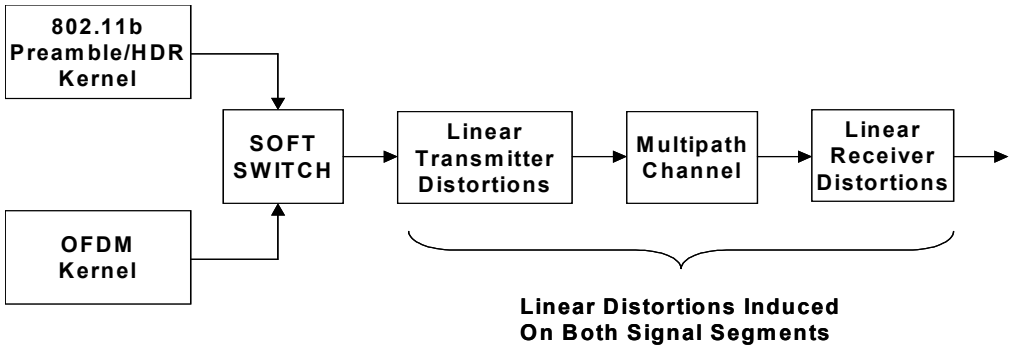

Figure 153H—Linear distortions common to the single carrier and multicarrier signal segments

In short, this common linear distortion requirement states that the dominant filters in the transmit radio will stay invariant and common to all waveform segments. Once the receiver has determined the end-to-end impulse response, channel information is assumed to be common to both the single carrier signal and the multicarrier signal. This will enable receiver design of linear-distortion mitigation techniques that do not require a reacquisition after transitioning to OFDM.

19.7.2.1.2 Symbol shaping unique to the DSSS-OFDM segment

OFDM spectral shaping may be achieved using two mechanisms: (1) Time-domain convolution filtering may be used to shape the spectrum. (2) Time-domain window tapering of OFDM symbol onset and termination may be used to shape the spectrum. This second mechanism can be viewed as frequency domain convolution. The first mechanism shall be common to both the OFDM and single carrier if it is a dominant distortion mechanism. The second mechanism may be unique to the OFDM segment, because it does not affect the frequency response of the 52 subcarriers.

The first spectral shaping mechanism using time-domain convolution filtering shall be common to both the single carrier and multicarrier segments for the reasons described in the preceding section. The receiver should not see intrapacket frequency response discontinuities.

Convolution filtering may be budgeted in various ways. One option would be to use a single filter that both the single carrier and multicarrier segments use. Another option would be to use two different physical filter realizations, one for the single carrier segment and a second for the multicarrier segment, say, for reason of distinct sample rates or bit precision. With this second implementation option, the designer shall ensure the frequency response of the filter is common to both packet segments.

Copyright © 2003 IEEE. All rights reserved.

Authorized licensed use limited to: [redacted] Downloaded on January 16,2023 at 15:46:33 UTC from IEEE Xplore. Restrictions apply.

DELL
EXHIBIT 1019 - PAGE 44

The second shaping mechanism, which uses frequency-domain convolution through time-domain subcarrier onset-and-termination shaping, may be unique to the OFDM segment. This unique technique is acceptable because it does not modify the required frequency response of the 52 subcarriers.

Spectral shaping by tapering the OFDM symbol onset-and-termination using a time-domain window is described in Clause 17 and is equally germane to Clause 19 systems. For convenience, one of the relevant figures from Clause 17 is repeated here as Figure 153I. Clause 17 suggested that the tapering transition duration is 0.1 µs.

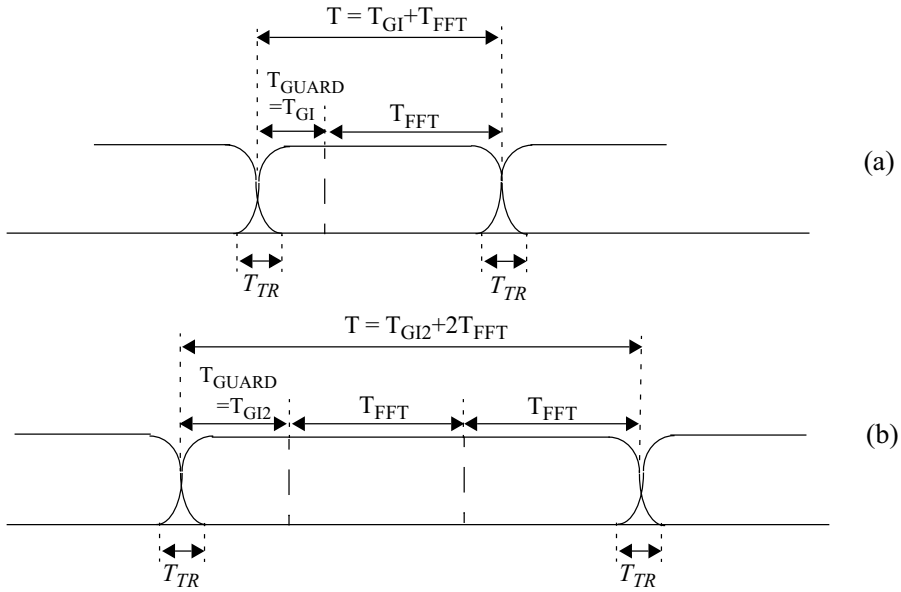

Figure 153I—Spectral shaping achieved by OFDM symbol onset and termination shaping

The effect of time-domain windowing on a single subcarrier's power spectrum is shown in Figure 153J for two cases. The first case is rectangular time-domain windowing of an OFDM symbol. The second case is for the Clause 17 suggested time-domain windowing of an OFDM symbol with a 0.1 µs transition. Note the difference in frequency-dependent amplitude roll-off. Adding the 52 frequency-bin-centered individual subcarrier power spectral densities generates the composite 52 subcarrier power spectrum.

This type of OFDM spectrum control does not affect the relative amplitudes and phases of the individual subcarriers. Instead, it affects each subcarrier's power spectral density. Consequently, this type of spectrum control has a benign effect on the relative spectrums of single carrier and the multicarrier packet segments, which is why it can be unique.

To achieve the design goal, the implementer may budget spectral shaping in the transmit radio. Some of the spectral shaping may be achieved using time-domain convolution filtering, and some may be achieved through time-domain windowing of the OFDM. In any case, the transmit implementation shall provide frequency response coherency.

 Copyright © 2003 IEEE. All rights reserved.

Authorized licensed use limited to: [redacted] Downloaded on January 16,2023 at 15:46:33 UTC from IEEE Xplore. Restrictions apply.

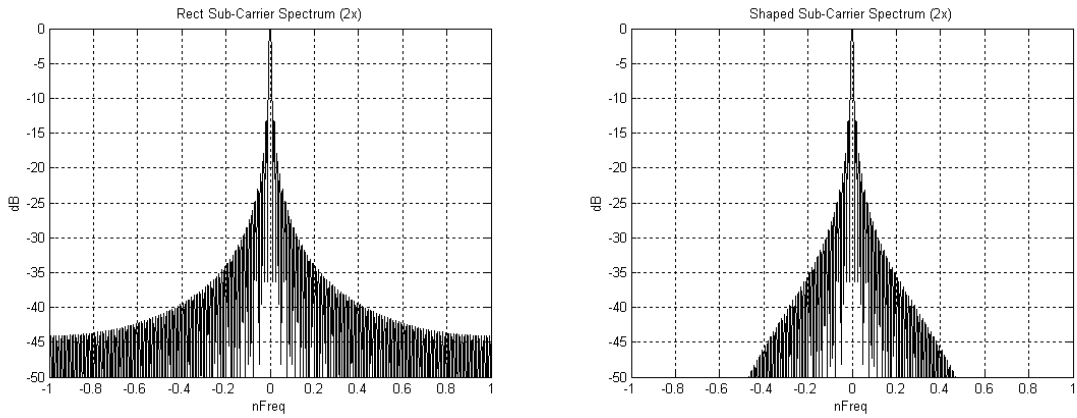

Figure 153J—Subcarrier spectrums for rectangular windowing and Clause 17 suggested windowing

19.7.2.1.3 Pulse shaping unique to the single carrier segment

This section describes the pulse-shaping requirements of the single carrier segment of the DSSS-OFDM packet. To establish frequency response coherency, it is necessary to specify the frequency response of the single carrier signal that establishes a coherent relationship to the frequency response of the OFDM.

The frequency response of the single carrier pulse is patterned after the tandem OFDM. The pattern is the OFDM signal as described in Clause 17, with an example provided in Annex G. The ideal OFDM signal has a flat amplitude response and zero-phase offset across 52 subcarriers. Clause 17 establishes the ideal frequency-response relationship among the 12 short SYNC subcarriers, 52 long SYNC subcarriers, the 52 SIGNAL field subcarriers, and the 52 data field subcarriers. Similarly, the ideal relationship to the single carrier frequency response is defined.

Relative to the ideal OFDM, the single carrier part of the DSSS-OFDM signal shall have the pulse shape established herein. In a particular implementation, it is acceptable to deviate from this ideal, but only in a manner that is common to both the single carrier signal and the multicarrier signal across the passband of the OFDM signal. This requirement provides the required frequency response coherency.

The frequency response of the single carrier pulse is patterned after the OFDM that will be transmitted in tandem. The single carrier pulse is derived from a time-windowed sinc function as shown in Figure 153K and Equation (39). The sinc function is the time response of an ideal brickwall filter. The brickwall filter is set equal to the bandwidth of an ideal OFDM signal. In particular, the bandwidth of the brickwall filter has been set to 52 times the Clause 17 subcarrier spacing of 20/64 MHz, or 312.5 KHz.

$$h_{IdealBW}(t) = f_W \frac{\sin(\pi f_W t)}{\pi f_W t} = f_W \mathrm{sinc}(f_W t) \tag{39}$$

where

$f_W = 52(20/64)$ MHz

The infinite duration impulse response of the brickwall filter should be windowed to something practical. A continuous time version of the Hanning window may be used. The Hanning window and an overlay of the sinc function are shown in Equation (40) and Figure 153L.

Copyright © 2003 IEEE. All rights reserved.

Authorized licensed use limited to: [redacted] Downloaded on January 16,2023 at 15:46:33 UTC from IEEE Xplore. Restrictions apply.

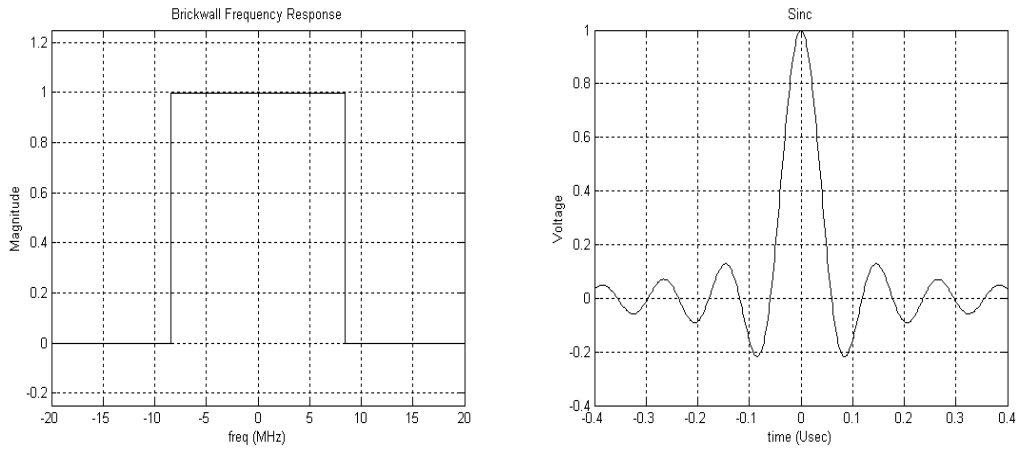

Figure 153K—The foundational brickwall filter

$$h_{\text{Window}}(t) = 0.5\left[1 + \cos\left(2\pi\frac{t}{t_{\text{SPAN}}}\right)\right] \tag{40}$$

where

$T_{\text{SPAN}} = 0.8$ usecs

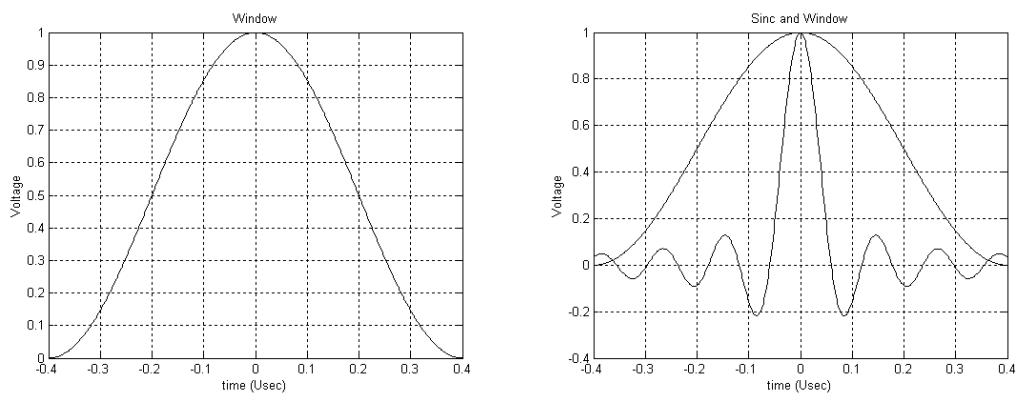

Figure 153L—The continuous time Hanning window

The pulse specified for use with the single carrier packet segment is obtained by application of the window as shown in Equation (41) and Figure 153M. Notice that its duration is equal to a Clause 17 short sync cycle, only 0.8 µs.

$$p(t) = h_{\text{Window}} h_{\text{IdealBW}}(t) \tag{41}$$

The frequency response of the derived pulse is shown in Figure 153N. This pulse generates a single carrier signal that has a spectrum nearly equal to that of the OFDM signal. This means that the receiver will experience essentially no change in receive signal power behavior even in the presence of multipath. At the point of the outermost subcarrier in the OFDM signal, the single carrier spectrum is down only about 4 dB. This is deemed adequate because the single carrier preamble-header is long in duration compared to the Clause 17 sync duration. Plenty of time is available to generate channel impulse response information that is sufficiently accurate.

 Copyright © 2003 IEEE. All rights reserved.

Authorized licensed use limited to: [redacted] Downloaded on January 16,2023 at 15:46:33 UTC from IEEE Xplore. Restrictions apply.

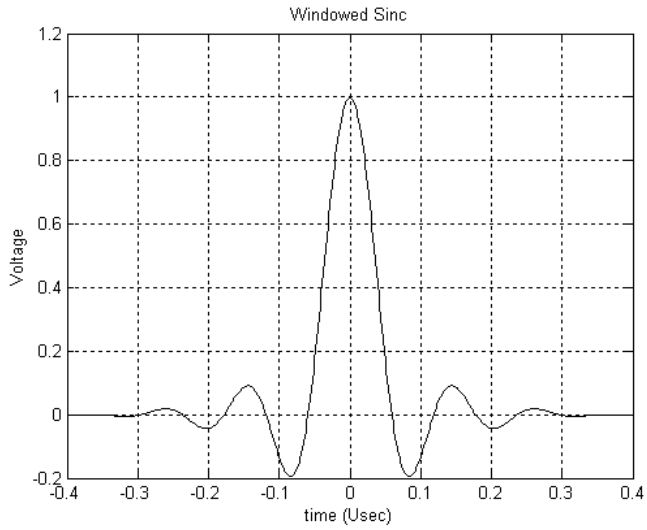

Figure 153M—The specified pulse

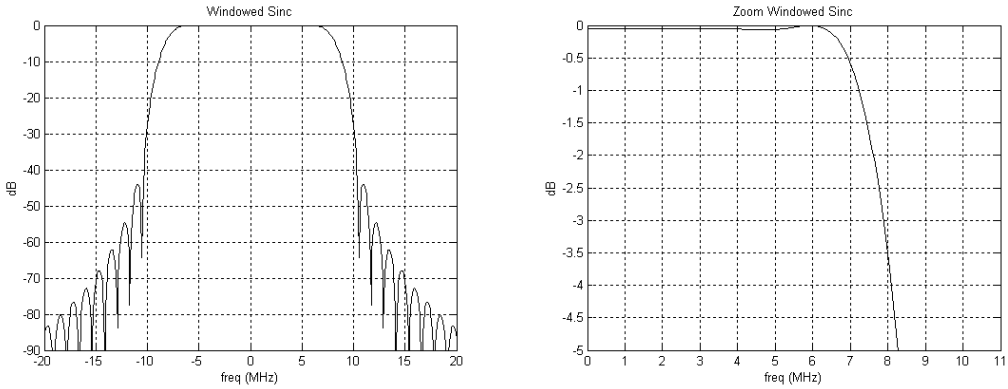

Figure 153N—The single carrier frequency response

In summary, the specified single carrier pulse provides frequency response coherency between the single carrier and multicarrier segments of the packet. This does not mean that the spectrums are identical between segments. Rather, it means the ideal frequency responses of both are known. Beyond this, all linear distortion is common to both. It is not necessary to use this single carrier pulse during Clause 15 or Clause 18 packet transmissions.

19.7.2.2 Sample-power matching requirement

The transmit signal power shall be equal for the single carrier and multicarrier signal segments. The point of comparison is shown in Figure 153O. The power measurement will be over the single carrier header and over the OFDM data symbols.

Copyright © 2003 IEEE. All rights reserved.

Authorized licensed use limited to: [redacted] Downloaded on January 16,2023 at 15:46:33 UTC from IEEE Xplore. Restrictions apply.

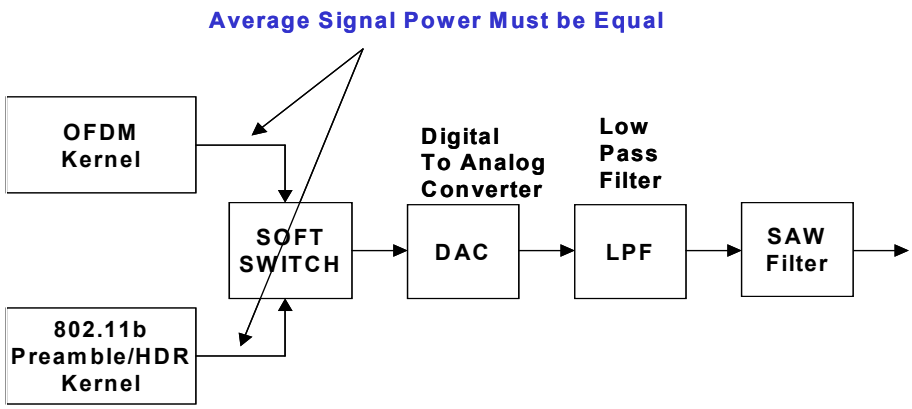

Figure 153O—Comparing signal power

19.7.2.3 Transition time alignment

This section describes how the single carrier signal and the multicarrier signal are time aligned. The single carrier signal uses a chip rate of 11 MHz. The OFDM signal uses a fundamental sample rate of 20 MHz. The signals are easily aligned by first aligning the 11 MHz clock and the 20 MHz clock on 1 µs boundaries as shown in Figure 153P.

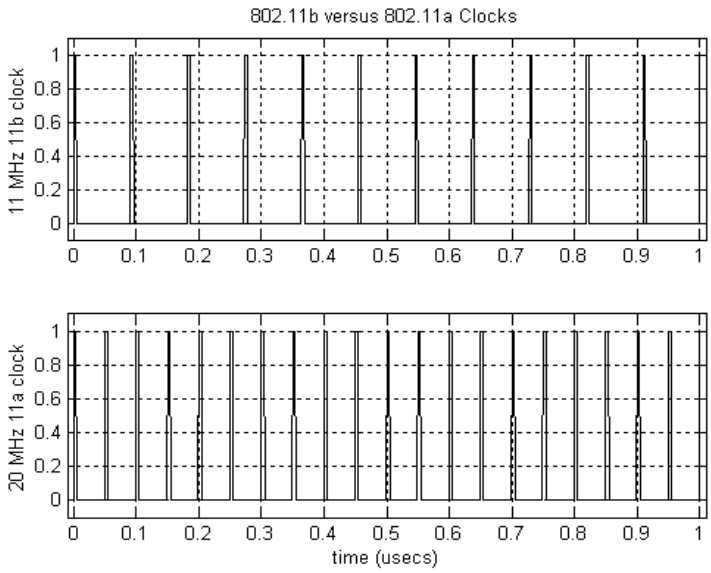

Figure 153P—Aligning the 11 MHz and 20 MHz clocks

The 11 Barker chips of the preamble and header are transmitted aligned with this timing epoch. The first Barker chip is transmitted synchronous to the epoch, and then the remaining 10 chips follow. This is repeated over the duration of the preamble and header.

Copyright © 2003 IEEE. All rights reserved.

Authorized licensed use limited to: [redacted] Downloaded on January 16,2023 at 15:46:33 UTC from IEEE Xplore. Restrictions apply.

DELL
EXHIBIT 1019 - PAGE 49

The peak of the continuous-time single carrier pulse shall be aligned to this epoch as shown in Figure 153Q.

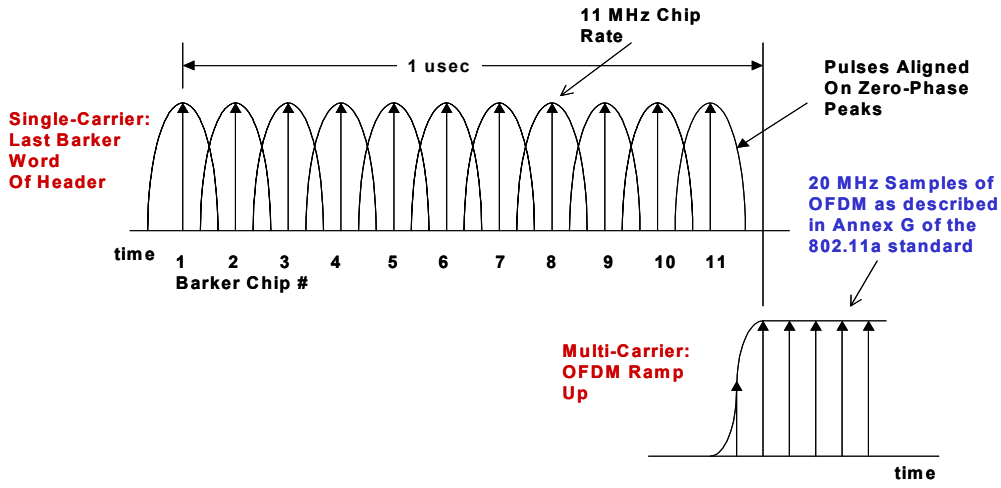

Figure 153Q—Single carrier to OFDM time alignment

The first full-strength OFDM sample is sent on the 1 µs-epoch boundary, as illustrated in Figure 153Q. Tapering may precede this. The peak corresponds to the first full-strength sample described in Annex G.

19.7.2.4 Single carrier termination

The single carrier segment of a packet should terminate in nominally 0.1 µs with the same type shaping described for Clause 17. This is depicted in Figure 153R. It is not necessary to completely flush the single carrier pulse-shaping filter. This minimizes the transition time overhead. This is informative as the basic requirement is to meet the spectral mask defined in 17.3.9.2.

This termination may be performed explicitly in the baseband processor, or it may be provided by filters in the transmit radio.

19.7.2.5 Transition carrier frequency requirement

The carrier frequency shall be coherent across the packet segments. This effect is depicted in Figure 153S.

19.7.2.6 Transition carrier phase requirement

The carrier phase shall be coherent across the single carrier to multicarrier transition. This coherency shall be differentially established relative to the phase of the last Barker symbol transmitted (the last 11 single carrier chips). The OFDM segment symbols shall be transmitted with one of four phases relative to the phase of OFDM symbols as described in Clause 17. These phases include 0, 90, 180, or 270 degrees, depending on the phase of the last Barker symbol. The phase of the first OFDM symbol (as referenced by the pilot tones) shall be 45 degrees more than the phase of the last Barker symbol. “More than” implies a clockwise rotation as shown in Figure 153U.

Copyright © 2003 IEEE. All rights reserved.

Authorized licensed use limited to: [redacted] Downloaded on January 16,2023 at 15:46:33 UTC from IEEE Xplore. Restrictions apply.

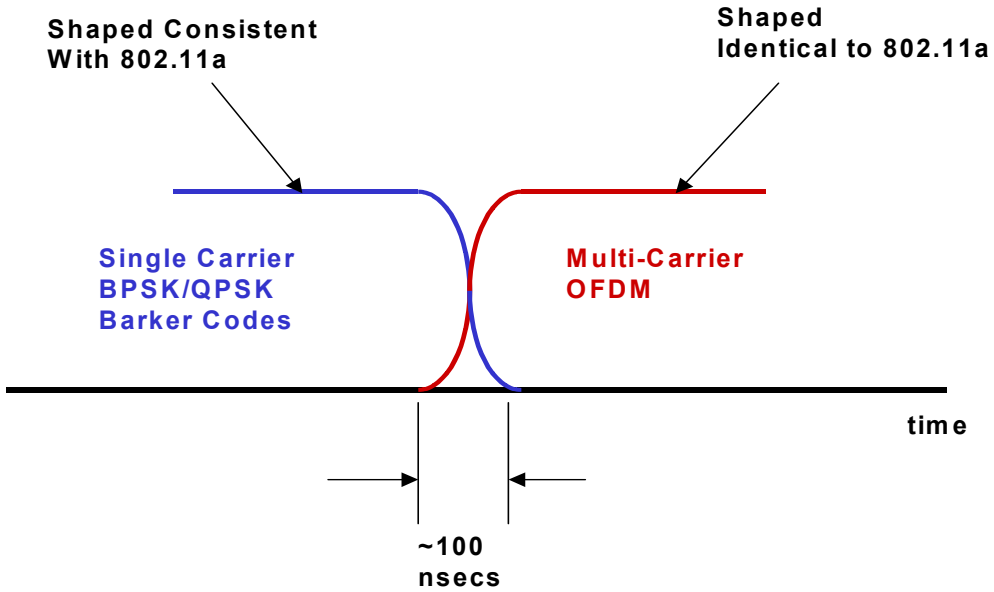

Figure 153R—Single carrier termination requirement

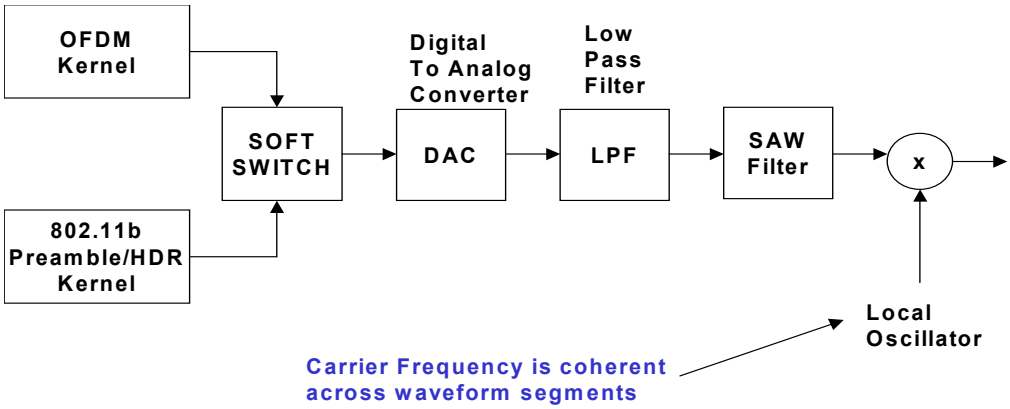

Figure 153S—Carrier frequency coherency shall be maintained

Copyright © 2003 IEEE. All rights reserved.

Authorized licensed use limited to: [redacted] Downloaded on January 16,2023 at 15:46:33 UTC from IEEE Xplore. Restrictions apply.

In a transmit implementation using I/Q signaling, it is common to maximally energize in the I-and-Q channels concurrently for BPSK or QPSK signaling. The analog stages of the transmit radio tend to perform best with this configuration. To achieve this effect, typically the BPSK or QPSK I-and-Q alignment of the Barker symbols are at 45 degrees, 135 degrees, –135 degrees, and –45 degrees, as shown in Figure 153T. This Barker symbol alignment is used to establish the phase of the OFDM signal.

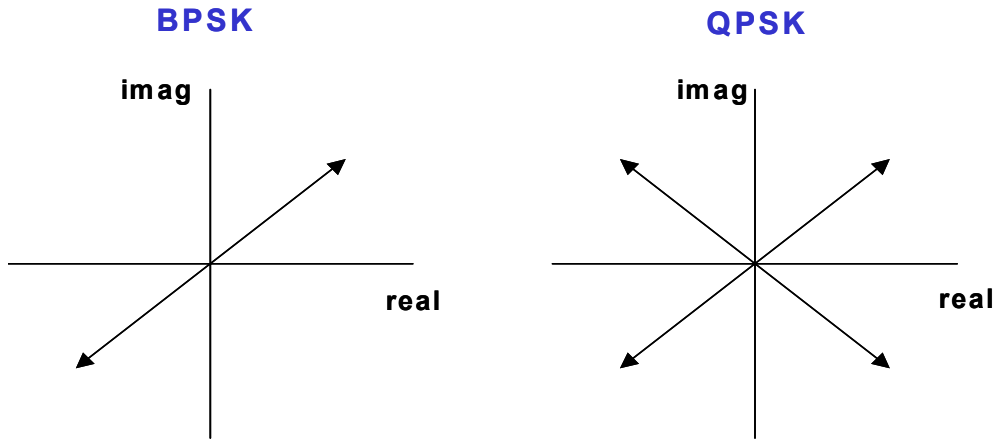

Figure 153T—BPSK and QPSK signaling with the I/Q channels maximally energized

Figure 153U is a series of diagrams illustrating the phase relationship between the last Barker symbol (not the last chip) in the IEEE 802.11g header and subsequent OFDM symbols. For example, if the phase of the last Barker symbol is in the first quadrant at 45 degrees, then the phase of the OFDM symbols will be transmitted as described in Annex G unmodified. However, if the phase of the last Barker symbol is in the second quadrant (135 degree phase), then the phase of the OFDM symbols will be rotated by +90 degrees relative to the phase of the samples in Annex G. If the phase of the last Barker symbol is in the third quadrant (–135 degree phase), then the phase of the OFDM symbols will be rotated by +180 degrees relative to the phase of the samples in Annex G. If the phase of the last Barker symbol is in the fourth quadrant (–45 degree phase), then the phase of the OFDM symbols will be rotated by +270 degrees relative to the phase of the samples in Annex G.

If the transmitter generates the Barker symbols at some other angular relationship to the I/Q axes, then the OFDM symbols shall be transmitted at a phase 45 degrees more than the phase of the last 11-chip Barker symbol.

19.7.2.7 Transmit modulation accuracy requirement

The preceding subclauses establish transmit modulation requirements without mention of required accuracy. The accuracy is as described in 17.3.9.7.

The required accuracy for a given transmit packet is data rate dependent. The packet accuracy is set by the data rate of the OFDM portion of the packet. The preamble and header will be transmitted with the same fidelity requirement as the fidelity requirement levied on the OFDM portion of the packet. For the single carrier portion of the packet, the EVM is interpreted as normalized mean-squared error (NMSE).

Copyright © 2003 IEEE. All rights reserved.

Authorized licensed use limited to: [redacted] Downloaded on January 16,2023 at 15:46:33 UTC from IEEE Xplore. Restrictions apply.

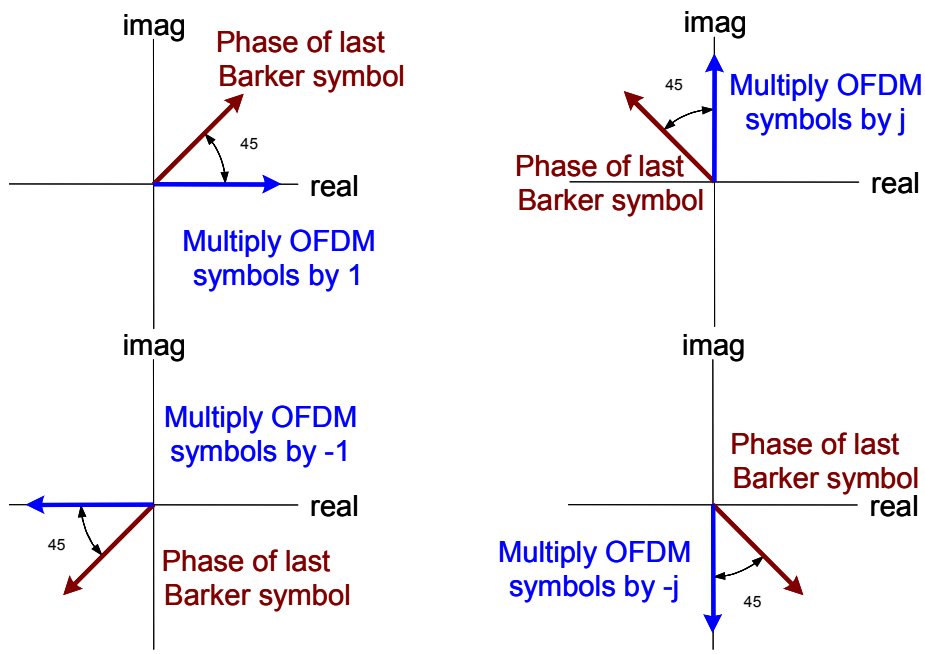

Figure 153U—The phase of the first OFDM segment symbol is established by the last Barker symbol

19.8 ERP PLME

19.8.1 PLME SAP

Table 123F lists the additional MIB attributes that may be accessed by the PHY sublayer entities and the intralayer of higher layer management entities (LMEs). These attributes are accessed via the PLME-GET, PLME-SET, PLME-RESET, and PLME-CHARACTERISTICS primitives defined in 10.4.

19.8.2 MIB

High Rate PHY MIB attributes are defined in Annex D with additions from this amendment, and with specific values defined in Table 123F.

19.8.3 TXTIME

The value of TXTIME is calculated for each modulation type based on parameters in the TXVECTOR. For the 1, 2, 5.5, and 11 Mbit/s modes with DSSS, CCK, and PBCC modulation formats, the value shall be calculated as described in 18.3.4.

Copyright © 2003 IEEE. All rights reserved.

Authorized licensed use limited to: [redacted] Downloaded on January 16,2023 at 15:46:33 UTC from IEEE Xplore. Restrictions apply.

DELL
EXHIBIT 1019 - PAGE 53

Table 123F—MIB attribute default values/ranges

Managed Object	Default Value/Range	Operational Semantics
dot11 PHY Operation Table		
dot11PHYtype	ERP (X'06')	Static
dot11CurrentRegDomain	Implementation dependent	Static
dot11TempType	Implementation dependent	Static
dot11 PHY Antenna Table		
dot11CurrentTxAntenna	Implementation dependent	Dynamic
dot11DiversitySupport	Implementation dependent	Static
dot11CurrentRxAntenna	Implementation dependent	Dynamic
dot11 PHY Tx Power Table		
dot11NumberSupportedPowerLevels	Implementation dependent	Static
dot11TxPowerLevel1	Implementation dependent	Static
dot11TxPowerLevel2	Implementation dependent	Static
dot11TxPowerLevel3	Implementation dependent	Static
dot11TxPowerLevel4	Implementation dependent	Static
dot11TxPowerLevel5	Implementation dependent	Static
dot11TxPowerLevel6	Implementation dependent	Static
dot11TxPowerLevel7	Implementation dependent	Static
dot11TxPowerLevel8	Implementation dependent	Static
dot11CurrentTxPowerLevel	Implementation dependent	Dynamic
dot11 Phy DSSS Table		
dot11CurrentChannel	Implementation dependent	Dynamic
dot11 Reg Domains Supported Table		
dot11RegDomainsSupportedValue(s)	Implementation dependent	Static
dot11 PHY Antennas List Table		
dot11SupportedTxAntenna	Implementation dependent	Static
dot11SupportedRxAntenna	Implementation dependent	Static
dot11DiversitySelectionRx	Implementation dependent	Dynamic
dot11 Supported Data Rates Tx Table		
dot11SupportedDataratesTxValue	X'02' = 1 Mbit/s X'04' = 2 Mbit/s X'0B' = 5.5 Mbit/s X'16' = 11 Mbit/s X'0C' = 6 Mbit/s X'12' = 9 Mbit/s X'18' = 12 Mbit/s X'24' = 18 Mbit/s X'2C = 22 Mbit/s X'30' = 24 Mbit/s X'42 = 33 Mbit/s X'48' = 36 Mbit/s X'60' = 48 Mbit/s X'6C' = 54 Mbit/s	Static

Copyright © 2003 IEEE. All rights reserved.

Authorized licensed use limited to: [redacted] Downloaded on January 16,2023 at 15:46:33 UTC from IEEE Xplore. Restrictions apply.

Table 123F—MIB attribute default values/ranges *(continued)*

Managed Object	Default Value/Range	Operational Semantics
dot11 Supported Data Rates Rx Table		
dot11SupportedDataRatesRxValue	X'02' = 1 Mbit/s X'04' = 2 Mbit/s X'0B' = 5.5 Mbit/s X'16' = 11 Mbit/s X'0C' = 6 Mbit/s X'12' = 9 Mbit/s X'18' = 12 Mbit/s X'24' = 18 Mbit/s X'2C = 22 Mbit/s X'30' = 24 Mbit/s X'42 = 33 Mbit/s X'48' = 36 Mbit/s X'60' = 48 Mbit/s X'6C' = 54 Mbit/s	Static
dot11 HRDSSS PHY Table		
dot11ShortPreambleOptionImplemented	True	Static
dot11PBCCOptionImplemented	Implementation dependent	Static
dot11ChannelAgilityPresent	Implementation dependent	Static
dot11ChannelAgilityEnabled	False/Boolean	Dynamic
dot11 PHY ERP Table		
dot11ERP-PBCCOptionImplemented	False/Boolean	Static
dot11DSSS-OFDMOptionImplemented	False/Boolean	Static
dot11DSSS-OFDMOptionEnabled	False/Boolean	Dynamic
dot11ShortSlotTimeOptionImplemented	False/Boolean	Static
dot11ShortSlotTimeOptionEnabled	False/Boolean	Dynamic

19.8.3.1 ERP-OFDM TXTIME calculations

The value of the TXTIME parameter returned by the PLME-TXTIME.confirm primitive shall be calculated using the ERP-OFDM TXTIME calculation as shown in Equation (42).

$$\text{TXTIME} = T_{\text{PREAMBLE}} + T_{\text{SIGNAL}} + T_{\text{SYM}} \times \text{Ceiling}\left((16 + 8 \times \text{LENGTH} + 6) / N_{\text{DBPS}}\right) + \text{Signal Extension} \quad (42)$$

where

T_{PREAMBLE}, T_{SIGNAL}, and T_{SYM} are defined in Table 79 in 17.3.2.3,
N_{DBPS} is the number of data bits per symbol and is derived from the DATARATE parameter in Table 78 in 17.3.2.2,
Ceiling is a function that returns the smallest integer value greater than or equal to its argument value,
Signal Extension is 6 μs.

Copyright © 2003 IEEE. All rights reserved.

Authorized licensed use limited to: [redacted] Downloaded on January 16,2023 at 15:46:33 UTC from IEEE Xplore. Restrictions apply.

DELL
EXHIBIT 1019 - PAGE 55

19.8.3.2 ERP-PBCC TXTIME calculations

The value of the TXTIME parameter returned by the PLME-TXTIME.confirm primitive shall be calculated according to the following:

For PBCC 5.5 and 11 Mbit/s, see 18.3.4.

For ERP-PBCC-22 Mbit/s, use Equation (43).

$$\text{TXTIME} = \text{PreambleLength} + \text{PLCPHeaderTime} + \text{Ceiling}(((\text{LENGTH}+\text{PBCC}) \times 8) / \text{DATARATE}) \quad (43)$$

For ERP-PBCC-33 Mbit/s, use Equation (44).

$$\text{TXTIME} = \text{PreambleLength} + \text{PLCPHeaderTime} + \text{Ceiling}(((\text{LENGTH}+\text{PBCC}) \times 8) / \text{DATARATE}) + \text{ClkSwitchTime}. \quad (44)$$

where

LENGTH and DATARATE are values from the TXVECTOR parameter of the corresponding PLME-TXTIME request primitive,
"PBCC" has a value of 1 if the SIGNAL value from the TXVECTOR parameter specifies ERP-PBCC and has a value of 0 otherwise,
PreambleLength is 144 µs if the PREAMBLE_TYPE value from the TXVECTOR parameter indicates "LONGPREAMBLE" or 72 µs if the PREAMBLE_TYPE value from the TXVECTOR parameter indicates "SHORTPREAMBLE",
PLCPHeaderTime is 48 µs if the PREAMBLE_TYPE value from the TXVECTOR parameter indicates "LONGPREAMBLE" or 24 µs if the PREAMBLE_TYPE value from the TXVECTOR parameter indicates "SHORTPREAMBLE",
LENGTH is in units of octets,
DATARATE is in units of Mbit/s,
ClkSwitchTime is defined as 1 µs,
Ceiling is a function that returns the smallest integer value greater than or equal to its argument value.

19.8.3.3 DSSS-OFDM TXTIME calculations

The value of the TXTIME parameter returned by the PLME-TXTIME.confirm primitive shall be calculated according to Equation (45):

$$\begin{aligned}\text{TXTIME} = {} & \text{PreambleLengthDSSS} + \text{PLCPHeaderTimeDSSS} \\ & + \text{PreambleLengthOFDM} + \text{PLCPSignalOFDM} \\ & + 4 \times \text{Ceiling}((\text{PLCPServiceBits} + 8 \times (\text{NumberOfOctets}) + \text{PadBits}) / N_{\text{DBPS}}) + \text{SignalExtension}\end{aligned} \quad (45)$$

where

PreambleLengthDSSS is 144 µs if the PREAMBLE_TYPE value from the TXVECTOR parameter indicates "LONGPREAMBLE," or 72 µs if the PREAMBLE_TYPE value from the TXVECTOR parameter indicates "SHORTPREAMBLE",
PLCPHeaderTimeDSSS is 48 µs if the PREAMBLE_TYPE value from the TXVECTOR parameter indicates "LONGPREAMBLE," or 24 µs if the PREAMBLE_TYPE value from the TXVECTOR parameter indicates "SHORTPREAMBLE",
Ceiling is a function that returns the smallest integer value greater than or equal to its argument value;
PreambleLengthOFDM is 8 µs,
PLCPSignalOFDM is 4 µs,
PLCPServiceBits is 16 bits;

Copyright © 2003 IEEE. All rights reserved.

Authorized licensed use limited to: [redacted] Downloaded on January 16,2023 at 15:46:33 UTC from IEEE Xplore. Restrictions apply.

DELL
EXHIBIT 1019 - PAGE 56

NumberOfOctets is the number of data octets in the PSDU,
PadBits is 6 bits,
SignalExtension is 6 µs,
N_{DBPS} is the number of data bits per OFDM symbol.

19.8.4 ERP-OFDM PLCP PSDU definition

The DSSS PHY characteristics in Table 123G shall be used for the ERP for the purposes of MAC timing calculations.

The slot time shall be 20 µs, unless the BSS consists only of ERP STAs that support the Short Slot Time option. STAs indicate support for a short slot time by setting the Short Slot Time subfield to 1 when transmitting Association Request and Reassociation Request MMPDUs. If the BSS consists of only ERP STAs that support the Short Slot Time option, an optional 9 µs slot time may be used. APs indicate usage of a 9 µs slot time by setting the Short Slot Time subfield to 1 in all Beacon, Probe Response, Association Response, and Reassociation MMPDU transmissions as described in 7.3.1.4. STAs shall use short slot if the BSS indicates short slot.

Table 123G—Extended Rate PHY characteristics

Characteristic	Value
aSlotTime	Long = 20 µs, short = 9 µs
aSIFSTime	10 µs
aCCATime	<15 µs for long slot time or <4 µs for Short Slot Time, see 19.4.6
aRxTxTurnaroundTime	<5 µs
aTxRxTurnaroundTime	<10 µs
aTxPLCPDelay	Implementation dependent as long as the requirements of aRxTxTurnaround-Time are met.
aRxPLCPDelay	Implementation dependent as long as the requirements of aSIFSTime and aCCATime are met.
aRxTxSwitchTime	<<1 µs
aTxRampOnTime	Implementation dependent as long as the requirements of aRxTxTurnaround-Time are met.
aTxRampOffTime	Implementation dependent as long as the requirements of aSIFSTime are met.
ATxRFDelay	Implementation dependent as long as the requirements of aRxTxTurnaround-Time are met.
ARxRFDelay	Implementation dependent as long as the requirements of aSIFSTime and aCCATime are met.
aAirPropagationTime	<<1 µs
aMACProcessingDelay	<2 µs
aPreambleLength	20 µs
aPLCPHeaderLength	4 µs
aMPDUMaxLength	4095
aCWmin(0)	31

Copyright © 2003 IEEE. All rights reserved.

Authorized licensed use limited to: [redacted] Downloaded on January 16,2023 at 15:46:33 UTC from IEEE Xplore. Restrictions apply.

DELL
EXHIBIT 1019 - PAGE 57

Table 123G—Extended Rate PHY characteristics *(continued)*

Characteristic	Value
aCWmin(1)	15
ACWmin	The set aCWmin()
aCWmax	1023

19.9 Extended Rate PMD sublayer

19.9.1 Scope and field of application

This subclause describes the PMD services provided to the PLCP for the ERP.

19.9.2 Overview of service

The ERP sublayer accepts PLCP sublayer service primitives and provides the actual means by which data are transmitted or received from the medium. The combined functions of the Extended Rate PMD sublayer primitives and parameters for the receive function result in a data stream, timing information, and associated received signal parameters being delivered to the PLCP sublayer. A similar functionality is provided for data transmission.

19.9.3 Overview of Interactions

The primitives associated with the PLCP sublayer to the ERP fall into two basic categories, as follows:

a) Service primitives that support PLCP peer-to-peer interactions
b) Service primitives that have local significance and that support sublayer-to-sublayer interactions

19.9.4 Basic service and options

All of the service primitives described in this subclause are considered mandatory, unless otherwise specified.

19.9.4.1 PMD_SAP peer-to-peer service primitives

Table 123H indicates the primitives for peer-to-peer interactions.

Table 123H—PMD_SAP peer-to-peer services

Primitive	Request	Indicate	Confirm	Response
PMD_Data	X	X		

19.9.4.2 PMD_SAP sublayer-to-sublayer service primitives

Table 123I indicates the primitives for sublayer-to-sublayer interactions.

Copyright © 2003 IEEE. All rights reserved.

Authorized licensed use limited to: [redacted] Downloaded on January 16,2023 at 15:46:33 UTC from IEEE Xplore. Restrictions apply.

DELL
EXHIBIT 1019 - PAGE 58

Table 123I—PMD_SAP sublayer-to-sublayer services

Primitive	Request	Indicate	Confirm	Response
PMD_TXSTART	X			
PMD_TXEND	X			
PMD_ANTSEL	X			
PMD_TXPWRLVL	X			
PMD_MODULATION	X			
PMD_PREAMBLE	X			
PMD_RATE	X			
PMD_RSSI		X		
PMD_SQ		X		
PMD_CS		X		
PMD_ED		X		

19.9.4.3 PMD_SAP service primitive parameters

Table 123J shows the parameters used by one or more of the PMD_SAP service primitives.

Table 123J—List of parameters for the PMD primitives

Parameter	Associated primitive	Value	Description
TXD_UNIT	PMD_DATA.request	0 to (2^n)–1, where n is the number of bits per symbol for the modulation and rate specified in PMD_MODULATION.request and PMD_RATE.request primitives.	This parameter represents a single block of data, which, in turn, is used by the PMD to be encoded into a transmitted symbol.
RXD_UNIT	PMD_DATA.indicate	0 to (2^n)–1, where n is the number of bits per symbol for the modulation and rate specified in PMD_MODULATION.request and PMD_RATE.request primitives.	This parameter represents a single symbol that has been demodulated by the PMD entity.
MODULATION	PMD_MODULATION.request	ERP-DSSS, ERP-CCK, PBCC, ERP-PBCC, ERP-OFDM, DSSS-OFDM	The MODULATION parameter specifies to the PMD layer, which ERP modulation format is for transmission of the PSDU portion of the PPDU.
PREAMBLE	PMD_PREAMBLE.request	0 for long, 1 for short	PREAMBLE selects which of the ERP preamble types is used for PLCP transmission, when applicable. It is not applicable to ERP-OFDM format.

Copyright © 2003 IEEE. All rights reserved.

Authorized licensed use limited to: [redacted] Downloaded on January 16,2023 at 15:46:33 UTC from IEEE Xplore. Restrictions apply.

DELL
EXHIBIT 1019 - PAGE 59

Table 123J—List of parameters for the PMD primitives *(continued)*

Parameter	Associated primitive	Value	Description
ANT_STATE	PMD_ANTSEL.request	1 to 256	ANT_STATE selects which of the available antennas is used for transmission. The number of available antennas is determined from the MIB table parameters.
TXPWR_LEVEL	PMD_TXPWRLVL.request	1–8 (max of 8 levels)	TXPWR_LEVEL selects which of the optional transmit power levels should be used for the current PPDU transmission. The number of available power levels is determined from the MIB table parameters.
RATE	PMD_RATE.request	X'0A' for 1 Mbit/s X'14' for 2 Mbit/s X'37' for 5.5 Mbit/s X'6E' for 11 Mbit/s X'DC' for 22 Mbit/s X'21' for 33 Mbit/s X'75' for 12 Mbit/s BPSK X'E7' for 24 Mbit/s QPSK X'4B' for 48 Mbit/s 16 QAM X'AA' for 72 Mbit/s 64QAM	RATE selects which of the ERP data rates is used for PSDU transmission. Note that the OFDM rates are the raw, uncoded rates as in 17.3.7 and 17.5.5 and represent the rates existing at this interface.
RSSI	PMD_RSSI.indicate	8 bits of RSSI (256 levels)	The RSSI is a measure of the RF energy received. Mapping of the RSSI values to actual received power is implementation dependent. See 19.9.5.10.
SQ	PMD_SQ.indicate	8 bits of SQ	This parameter is a measure of the signal quality received by the ERP during the PLCP preamble and header. It is not applicable to ERP-OFDM format. See 19.9.5.11.

Copyright © 2003 IEEE. All rights reserved.

Authorized licensed use limited to: [redacted] Downloaded on January 16,2023 at 15:46:33 UTC from IEEE Xplore. Restrictions apply.

Table 123J—List of parameters for the PMD primitives *(continued)*

Parameter	Associated primitive	Value	Description
CS	PMD_CS.indicate	0 for DISABLED1 for ENABLED	The PMD_CS (preamble detect) primitive in conjunction with the PMD_ED provides the CCA status through the PLCP layer PHY?CCA primitive. PMD_CS indicates a binary status of ENABLED or DISABLED. PMD_CS is ENABLED upon detection of Barker code or OFDM sync signals. PMD_CS is DISABLED otherwise.
ED	PMD_ED.indicate	0 for DISABLED1 for ENABLED	The PMD_ED (energy detect) primitive, along with the PMD_SQ, provides CCA status at the PLCP layer through the PHY?CCA primitive. PMD_ED indicates a binary status of ENABLED or DISABLED. PMD_ED is ENABLED when the RSSI indicated in the PMD_RSSI is greater than the detection threshold. PMD_ED is DISALBED otherwise.

19.9.5 PMD_SAP detailed service specification

The following subclauses describe the services provided by each PMD primitive.

19.9.5.1 PMD_DATA.request

This primitive is the same as that defined in 17.5.5.1 and 18.4.5.1 except that the parameter TXD_UNIT is expanded in scope to reflect the supported modulation formats of ERP as defined in 19.9.4.3.

19.9.5.2 PMD_DATA.indicate

This primitive is the same as that defined in 17.5.5.2 and 18.4.5.2 except that the parameter RXD_UNIT is expanded in scope to reflect the supported modulation formats of ERP as defined in 19.9.4.3.

19.9.5.3 PMD_MODULATION.request

This primitive is the same as that defined in 18.4.5.3 except that the parameter MODULATION is expanded in scope to reflect the supported modulation formats of ERP as defined in 19.9.4.3.

Copyright © 2003 IEEE. All rights reserved.

Authorized licensed use limited to: [redacted] Downloaded on January 16,2023 at 15:46:33 UTC from IEEE Xplore. Restrictions apply.

DELL
EXHIBIT 1019 - PAGE 61

19.9.5.4 PMD_PREAMBLE.request

This primitive is the same as that defined in 18.4.5.4, including the definition of the parameter PREAMBLE. This primitive is not used in association with transmission of ERP-OFDM modulations.

19.9.5.5 PMD_TXSTART.request

This primitive is the same as that defined in 17.5.5.3 and 18.4.5.6.

19.9.5.6 PMD_TXEND.request

This primitive is the same as that defined in 17.5.5.4 and 18.4.5.7.

19.9.5.7 PMD_ANTSEL.request

This primitive is the same as that defined in 18.4.5.8, including the definition of the parameter ANT_STATE.

19.9.5.8 PMD_TXPRWLVL.request

This primitive is the same as that defined in 17.5.5.5, including the definition of the parameter TXPWR_LEVEL.

19.9.5.9 PMD_RATE.request

This primitive is the same as that defined in 17.5.5.6 and 18.4.5.10, except that the parameter RATE is expanded in scope to reflect the supported ERP transmission rates as defined in 19.9.4.3.

19.9.5.10 PMD_RSSI.indicate

This primitive is the same as that defined in 17.5.5.7 and 18.4.5.11, including the parameter RSSI. This primitive is used to aid in link optimization algorithms such as roaming decisions.

19.9.5.11 PMD_SQ.indicate

This primitive is the same as that defined in 18.4.5.12, including the parameter SQ. This primitive is not used in association with reception of ERP-OFDM modulations. This primitive is used to aid in link optimization algorithms such as roaming decisions.

19.9.5.12 PMD_CS.indicate

This primitive is the same as that defined in 18.4.5.13, except that its use is expanded for use with all ERP modulation types as described in 19.3.5.

19.9.5.13 PMD_ED.indicate

This primitive is the same as that defined in 18.4.5.14, except that its use is expanded for use with all ERP modulation types as described in 19.3.5.

Copyright © 2003 IEEE. All rights reserved.

Authorized licensed use limited to: [redacted] Downloaded on January 16,2023 at 15:46:33 UTC from IEEE Xplore. Restrictions apply.

DELL
EXHIBIT 1019 - PAGE 62

Annex A

(normative)

Protocol implementation conformance statement (PICS) proforma

A.3 Instructions for completing the PICS proforma

A.3.1 General structure of the PICS proforma

Change the fifth paragraph in A.3.1 as shown:

The PICS proforma for a station consists of A.4.1 through A.4.4 inclusive, and at least one of A.4.5, A.4.6, ~~or~~ A4.7, A4.8, A4.9, or A.4.12 corresponding to the PHY implemented.

A.4 PICS Proforma

A.4.3 IUT Configuration

Insert the following row at the bottom of the table in A.4.3:

Item	IUT configuration	References	Status	Support
*CF9	Extended Rate PHY layer	19	O.2	Yes ❑ No ❑ N/A ❑

A.4.4 MAC protocol

A.4.4.1 Mac Protocol capabilities

Insert the following rows at the bottom of the table in A.4.4.1:

Copyright © 2003 IEEE. All rights reserved.

Authorized licensed use limited to: [redacted] Downloaded on January 16,2023 at 15:46:33 UTC from IEEE Xplore. Restrictions apply.

DELL
EXHIBIT 1019 - PAGE 63

Item	Protocol items	References	Status	Support
PC16	Set dot11ShortPreambleOptionImplemented to 1	7.3.1.4	CF9:M	Yes ❑ No ❑ N/A ❑
PC17	Set PBCC subfield as described in reference	7.3.1.4	CF9:M	Yes ❑ No ❑ N/A ❑
PC18	Set DSSS-OFDM subfield as described in reference	7.3.1.4	CF9:M	Yes ❑ No ❑ N/A ❑
PC19	Set channel agility subfield as described in reference	7.3.1.4	CF9:M	Yes ❑ No ❑ N/A ❑
PC20	Set Short Slot Time subfield as described in reference	7.3.1.4	CF9:M	Yes ❑ No ❑ N/A ❑
PC21	Monitor each received short time slot subfield and take action as described in reference	7.3.1.4	CF9:M	Yes ❑ No ❑ N/A ❑
PC22	Transmit the ERP Information element in each transmitted Beacon or Probe Responses in the format and with content as described in reference	7.3.1.4	CF9:M	Yes ❑ No ❑ N/A ❑
PC23	Receive the ERP Information element and employ a protection mechanism when required prior to transmitting information using ERP-OFDM modulation	7.3.1.4	CF9:M	Yes ❑ No ❑ N/A ❑
PC24	Determine the value of aCWmin based on the characteristic rate set as described in the reference	9.2.12	CF9:M	Yes ❑ No ❑ N/A ❑
PC25	Transmit control response frames at the largest basic rates less than equal to the rate received and with the same PHY options or use the highest mandatory rate if no basic rate meets the above criterion	9.6	CF9:M	Yes ❑ No ❑ N/A ❑
PC26	Transmit broadcast or multicast frames at a rate in the basic rate set	9.6	CF9:M	Yes ❑ No ❑ N/A ❑
PC27	Transmit unicast frames at any supported rate selected by a rate switching mechanism as long as it is supported by the destination STA	9.6	CF9:M	Yes ❑ No ❑ N/A ❑
PC28	Do not transmit at a data rate higher than the greatest rate in the OperationalRateSet	9.6	CF9:M	Yes ❑ No ❑ N/A ❑
PC29	Use ERP Information element to control use of protection mechanism as described in the reference	9.10	CF9:M	Yes ❑ No ❑ N/A ❑
PC30	Updated NAV is long enough to cover frame and any response	9.10	CF9:M	Yes ❑ No ❑ N/A ❑
PC31	Support transmission of CTS-to-self sequence as described in the references	7.2.12, 9.2.11, 9.7	CF9:O	Yes ❑ No ❑ N/A ❑
PC32	Support reception of CTS-to-self sequence as described in the references	7.2.12, 9.2.11, 9.7	CF9:M	Yes ❑ No ❑ N/A ❑
PC33	Update NAV	9.10	CF9:M	Yes ❑ No ❑ N/A ❑

Copyright © 2003 IEEE. All rights reserved.

Authorized licensed use limited to: [redacted] Downloaded on January 16,2023 at 15:46:33 UTC from IEEE Xplore. Restrictions apply.

Insert new subclause A.4.11:

A.4.11 ERP Physical Layer functions

Item	PHY features	References	Status	Support
*ERP1	Transmit and Receive ERP-DSSS data rates 1 and 2 Mbit/s and ERP-CCK data rates 5.5 and 11 Mbit/s	19.3.2	CF9:M	Yes ❑ No ❑ N/A ❑
ERP1.1	Transmit and receive ERP-OFDM data rates of 6, 12, and 24 Mbit/s	19.3.2	CF9:M	Yes ❑ No ❑ N/A ❑
ERP1.2	Transmit and receive ERP-OFDM data rate of 9	19.3.2	ERP1:O	Yes ❑ No ❑ N/A ❑
ERP1.3	Transmit and receive ERP-OFDM data rate of 18	19.3.2	ERP1:O	Yes ❑ No ❑ N/A ❑
ERP1.4	Transmit and receive ERP-OFDM data rate of 36	19.3.2	ERP1:O	Yes ❑ No ❑ N/A ❑
ERP1.5	Transmit and receive ERP-OFDM data rate of 48	19.3.2	ERP1:O	Yes ❑ No ❑ N/A ❑
ERP1.6	Transmit and receive ERP-OFDM data rate of 54	19.3.2	ERP1:O	Yes ❑ No ❑ N/A ❑
*ERP2	Transmit and receive ERP-PBCC data rate of 22 Mbit/s	19.3.2	CF9&HRDS9.1&HRDS9.2:O	Yes ❑ No ❑ N/A ❑
ERP2.1	Transmit and receive ERP-PBCC data rate of 33 Mbit/s	19.3.2	ERP2:O	Yes ❑ No ❑ N/A ❑
*ERP3	Transmit and receive DSSS-OFDM data at same rates as ERP-OFDM	19.3.2	CF9:O	Yes ❑ No ❑ N/A ❑
ERP4	Support of ERP3 required PPDU formats as described in reference	19.3.2	CF9:O	Yes ❑ No ❑ N/A ❑
ERP5	Able to transmit and receive long and short DSSS as well as OFDM preambles	19.3.2	CF9:M	Yes ❑ No ❑ N/A ❑

Copyright © 2003 IEEE. All rights reserved.

Authorized licensed use limited to: [redacted] Downloaded on January 16,2023 at 15:46:33 UTC from IEEE Xplore. Restrictions apply.

DELL
EXHIBIT 1019 - PAGE 65

Item	PHY features	References	Status	Support
ERP6	Set SERVICE field bits for DSSS-OFDM, ERP-PBCC, locked clocks, and length extension (b0, b2, b3, b5, b6, and b7)	19.3.2.1	CF9:M	Yes ❑ No ❑ N/A ❑
ERP7	Set b1 & b4 of long and short preamble PPDU SERVICE field to zero	19.3.2.1	CF9:M	Yes ❑ No ❑ N/A ❑
ERP8	b2 shall be set to 1 in all long and short preamble PPDU SERVICE fields	19.3.2.1	CF9:M	Yes ❑ No ❑ N/A ❑
ERP9	Set bits b5, b6, and b7 of the long and short preamble PPDU SERVICE fields as described in the reference	19.3.2.1, 19.3.2.1.2	CF9:M	Yes ❑ No ❑ N/A ❑
ERP10	Use Clause 15 or Clause 18 rates when using protection mechanisms	9.10	CF9:M	Yes ❑ No ❑ N/A ❑
ERP11	SIGNAL field set to 3 Mbit/s in all long and short DSSS-OFDM PPDU formats as described in the reference	19.3.2.4	ERP3:M	Yes ❑ No ❑ N/A ❑
ERP12	Calculate DSSS-OFDM length with signal extension	19.3.2.4.1	ERP3:M	Yes ❑ No ❑ N/A ❑
ERP13	Set ERP-PBCC encoder in state 0 at beginning of PPDU	19.3.3.2	ERP2:M	Yes ❑ No ❑ N/A ❑
ERP14	Set phase of ERP-PBCC relative to header	19.3.3.2	ERP2:M	Yes ❑ No ❑ N/A ❑
ERP15	Use same pulse shape for 22 and 33 Mbit/s	19.3.3.2	ERP2:M	Yes ❑ No ❑ N/A ❑
ERP16	Add signal extension of 6 µs	19.3.2.3	CF9:M	Yes ❑ No ❑ N/A ❑
ERP17	Simultaneous CCA on long preamble Barker, short preamble Barker, and OFDM	19.3.5	CF9:M	Yes ❑ No ❑ N/A ❑

Copyright © 2003 IEEE. All rights reserved.

Authorized licensed use limited to: [redacted] Downloaded on January 16,2023 at 15:46:33 UTC from IEEE Xplore. Restrictions apply.

Item	PHY features	References	Status	Support
ERP18	CCA with energy detect above threshold and carrier sense	19.3.5	CF9:M	Yes ❑ No ❑ N/A ❑
ERP19	Decode as DSSS-OFDM if signal field indicates 3 Mbit/s	19.3.6	ERP3:M	Yes ❑ No ❑ N/A ❑
ERP20	Able to automatically detect format of long preamble Barker, short preamble Barker, and OFDM and receive appropriately	19.3.6	CF9:M	Yes ❑ No ❑ N/A ❑
ERP21	Comply with local regulatory frequency allocation requirements	19.4.1	CF9:M	Yes ❑ No ❑ N/A ❑
ERP22	Use frequency plan for 2.4 GHz	19.4.2	CF9:M	Yes ❑ No ❑ N/A ❑
ERP23	Comply with regulatory spurious emissions regulations	19.4.3	CF9:M	Yes ❑ No ❑ N/A ❑
ERP24	Slot time requirements	19.4.4	CF9:M	Yes ❑ No ❑ N/A ❑
ERP25	Implement Short Slot Time option	19.4.4	CF9:O	Yes ❑ No ❑ N/A ❑
ERP26	Use 10 µs SIFS time	19.4.6	CF9:M	Yes ❑ No ❑ N/A ❑
ERP27	Comply with regulatory transmit power requirements	19.4.7.1	CF9:M	Yes ❑ No ❑ N/A ❑
ERP28	±25 PPM frequency tolerance	19.4.7.2	CF9:M	Yes ❑ No ❑ N/A ❑
ERP29	Use locked clocks	19.4.7.2, 19.4.7.3	CF9:M	Yes ❑ No ❑ N/A ❑
ERP30	Tolerate input level of –20 dBm	19.5.3	CF9:M	Yes ❑ No ❑ N/A ❑
ERP31	Use specified transmit mask	19.5.4	CF9:M	Yes ❑ No ❑ N/A ❑
ERP32	Meet sensitivity for all supported data rates	19.5.1	CF9:M	Yes ❑ No ❑ N/A ❑
ERP33	Reject adjacent channels as in Table 91 in 17.3.10.1 or in 18.4.8.3 as appropriate	19.5.2	CF9:M	Yes ❑ No ❑ N/A ❑

Copyright © 2003 IEEE. All rights reserved.

Authorized licensed use limited to: [redacted] Downloaded on January 16,2023 at 15:46:33 UTC from IEEE Xplore. Restrictions apply.

DELL
EXHIBIT 1019 - PAGE 67

Item	PHY features	References	Status	Support
ERP34	Coherent transition of ERP-DSSS to OFDM	19.7.2, 19.7.2.7	ERP3:M	Yes ❑ No ❑ N/A ❑
ERP35	Same signal shaping of ERP-DSSS and OFDM	19.7.2.1	ERP3:M	Yes ❑ No ❑ N/A ❑
ERP36	Transmit power equal for ERP-DSSS and OFDM segments	19.7.2.2	ERP3:M	Yes ❑ No ❑ N/A ❑
ERP37	Align transition time	19.7.2.3	ERP3:M	Yes ❑ No ❑ N/A ❑
ERP38	Set transition phase to 45 degrees	19.7.2.3	ERP3:M	Yes ❑ No ❑ N/A ❑
ERP39	Calculate ERP-OFDM TXTime	19.8.3.1	CF9:M	Yes ❑ No ❑ N/A ❑
ERP40	Calculate ERP-PBCC TXTime	19.8.3.2	ERP2:M	Yes ❑ No ❑ N/A ❑
ERP41	Calculate DSSS-OFDM TXTIME	19.8.3.3	ERP3:M	Yes ❑ No ❑ N/A ❑
ERP42	Revert to 20 ms slot time when establishing association with a long slot time STA	7.3.1.4	CF9:M	Yes ❑ No ❑ N/A ❑
ERP43	Support TXVECTOR and RXVECTOR as described in reference	9.2	CF9:M	Yes ❑ No ❑ N/A ❑
ERP44	Terminate single carrier segment smoothly	19.7.2.4	ERP3:M	Yes ❑ No ❑ N/A ❑

Copyright © 2003 IEEE. All rights reserved.

Authorized licensed use limited to: [redacted] Downloaded on January 16,2023 at 15:46:33 UTC from IEEE Xplore. Restrictions apply.

Annex C

(normative)

Formal description of MAC operation

C.2 Data type and operator definitions for the MAC state machines

Change Package macsorts 3120_d\Frame_4(31) in C.2 as shown:

Package macsorts

3120_d\Frame_4(31)

```
/* ... Frame Sort Axioms continued */
          setTs(f, tm) == SubStr(f, 0, 24) // mkOS(fix(tm), 1) //
            mkOS((fix(tm) / 256), 1) // mkOS((fix(tm) / 65536), 1) //
            mkOS((fix(tm) / 16777216), 1) //
            mkOS((fix(tm) / 4294967296), 1) //
            mkOS(((fix(tm) / 4294967296) / 256), 1) //
            mkOS(((fix(tm) / 4294967296) / 65536), 1) //
            mkOS(((fix(tm) / 4294967296) / 16777216), 1) //
            SubStr(f, 32, Length(f) - 32); );
        for all stat in StatusCode(
          status(f) == SubStr(f, 26, 2);
          setStatus(f, stat) ==
            SubStr(f, 0, 26) // stat // SubStr(f, 28, Length(f) - 28);
          authStat(f) == SubStr(f, 28, 2); );
        for all rea in ReasonCode( reason(f) == SubStr(f, 24, 2); );
        for all alg in AuthType( AuthType(f) == SubStr(f, 24, 2); );
        for all u in TU(
          beaconInt(f) == octetVal(f(32)) + (octetVal(f(33)) * 256);
          listenInt(f) == octetVal(f(26)) + (octetVal(f(27)) * 256); );
        for all sta in AssocId(
          AId(f) == octetVal(f(28)) + (octetVal(f(29)) * 256);
          setAId(f, sta) == SubStr(f, 0, 28) // mkOS(sta mod 256, 1) //
            mkOS(sta / 256, 1) // SubStr(f, 30, Length(f) - 30); );
        for all kid in KeyIndexRange(
          keyId(f) == octetVal(f(27)) / 64;
          setKeyId(f, kid) == Modify!(f, 27, mkOS(kid * 64)); ); )));
endnewtype Frame;
```

```
/*************************************************************************
*       ReasonCode sort
 *************************************************************************/
newtype ReasonCode  inherits Octetstring  operators all;
   adding literals unspec_reason,  auth_not_valid,  deauth_lv_ss,
     inactivity,  ap_overload,  class2_err,  class3_err,
     disas_lv_ss,  asoc_not_auth;
   axioms
     unspec_reason == mkOS(1, 2);  auth_not_valid == mkOS(2, 2);
     deauth_lv_ss == mkOS(3, 2);  inactivity == mkOS(4, 2);
     ap_overload == mkOS(5, 2);  class2_err == mkOS(6, 2);
     class3_err == mkOS(7, 2);  disas_lv_ss == mkOS(8, 2);
     assoc_not_auth == mkOS(9, 2);
endnewtype ReasonCode;
```

```
/*************************************************************************
*       StatusCode sort
 *************************************************************************/
newtype StatusCode  inherits Octetstring  operators all;
   adding literals successful,  unspec_fail,  unsup_cap,
     reasoc_no_asoc,  fail_other,  unsupt_alg,  auth_seq_fail,
     chlng_fail,  auth_timeout,  ap_full,  unsup_rate,  no_short_preamble,
     no_Pbcc,  no_agility,  no_short_slot,  no_dsss_ofdm;
   axioms
     successful == mkOS(0, 2);  unspec_failure == mkOS(1, 2);
     unsup_cap == mkOS(10, 2);  reasoc_no_asoc == mkOS(11, 2);
     fail_other == mkOS(12, 2);  unsupt_alg == mkOS(13, 2);
     auth_seq_fail == mkOS(14, 2);  chlng_fail == mkOS(15, 2);
     auth_timeout == mkOS(16, 2);  ap_full == mkOS(17, 2);
     unsup_rate == mkOS(18, 2);
     no_short_preamble == mkOS(19, 2);
     no_Pbcc == mkOS(20, 2);  no_agility == mkOS(21, 2);
     no_short_slot == mkOS(24, 2);  no_dsss_ofdm == mkOS(25, 2);
endnewtype StatusCode;
```


Copyright © 2003 IEEE. All rights reserved.

Authorized licensed use limited to: [redacted] Downloaded on January 16,2023 at 15:46:33 UTC from IEEE Xplore. Restrictions apply.

DELL
EXHIBIT 1019 - PAGE 69

Change Package macsorts 3122_d\MgmtFields(31) in C.2 as shown:

Package macsorts

3122_d\MgmtFields(31)

```
/*****************************************************************************
*       ElementID sort
 *****************************************************************************/
newtype ElementID  inherits Octetstring  operators all;
   adding literals eSsId,  eSupRates,  eFhParms,  eDsParms,
      eCfParms,  eTim,  eIbParms,  eCtext,  eERP,  eExtSupRates;
   axioms
      eSsId == mkOS(0, 1); /* service set identifier (0:32) */
      eSupRates == mkOS(1, 1); /* supported rates (1:8) */
      eFhParms == mkOS(2, 1); /* FH parameter set (5) */
      eDsParms == mkOS(3, 1); /* DS parameter set (1) */
      eCfParms == mkOS(4, 1); /* CF parameter set (6) */
      eTim == mkOS(5, 1); /* Traffic Information Map (4:254) */
      eIbParms == mkOS(6, 1); /* IBSS parameter set (2) */
      eCountry == mkOS(7, 1); /* Country Information (8:254) */
      eHopParm == mkOS(8, 1); /* FH Hopping Parameters (4) */
      eHopTable == mkOS(9, 1); /* FH Hopping Table (6:254) */
      eRequest == mkOS(10, 1); /* Request (3:254) */
      eCtext == mkOS(16, 1); /* challenge text (128, see 8.1.2.2) */
      eERP == mkOS(42, 1); /* ERP Information element */
      eExtSupRates == mkOS(50, 1); /* Extended Supported Rates (1:255) */
endnewtype ElementID;
```

```
/*****************************************************************************
*       Capability field bit assignments sort
 *****************************************************************************/
newtype Capability inherits Bitstring operators all;
   adding literals cEss,  cIbss, cPollable,  cPollReq, cPrivacy,  cShortPreamble,
      cPBCC,  cChannelAgility,  cShortSlot,  cDsssOfdm;
   axioms
      cEss == S8(1,0,0,0,0,0,0,0) // 0x00; /* ESS capability */
      cIbss == S8(0,1,0,0,0,0,0,0) // 0x00; /* IBSS capability */
      cPollable == S8(0,0,1,0,0,0,0,0) // 0x00; /* CF-pollable (sta), PC present (ap) */
      cPollReq == S8(0,0,0,1,0,0,0,0) // 0x00; /* not CF poll req (sta), PC polls (ap) */
      cPrivacy == S8(0,0,0,0,1,0,0,0) // 0x00; /* WEP required */
      cShortPreamble == S8(0,0,0,0,0,1,0,0) // 0x00; /* Short Preamble */
      cPBCC == S8(0,0,0,0,0,0,1,0) // 0x00; /* PBCC */
      cChannelAgility == S8(0,0,0,0,0,0,0,1) // 0x00; /* Channel Agility */
      cShortSlot == 0x00 // S8(0,1,0,0,0,0,0,0); /* Short Slot Time */
      cDsssOfdm == 0x00 // S8(0,0,0,0,1,0,0,0); /* DSSS-OFDM modulation */
endnewtype Capability;
```

```
/*****************************************************************************
*       IBSS parameter set sort
 *****************************************************************************/
newtype IbssParms  inherits Octetstring  operators all;
   adding operators
      atimWin : IbssParms -> TU
      setAtimWin : IbssParms, TU -> IbssParms;
   axioms
      for all ib in IbssParms(  for all u in TU(
         atimWin(ib) == octetVal(ib(0)) + (octetVal(ib(1)) * 256);
         setAtimWin(ib, u) == mkOS(u mod 256, 1) // mkOS(u / 256, 1); ));
endnewtype IbssParms;
```

Copyright © 2003 IEEE. All rights reserved.

Authorized licensed use limited to: [redacted] Downloaded on January 16,2023 at 15:46:33 UTC from IEEE Xplore. Restrictions apply.

C.3 State machines for MAC stations

Replace the diagram sta_tx_idle_2e(9) with the following:

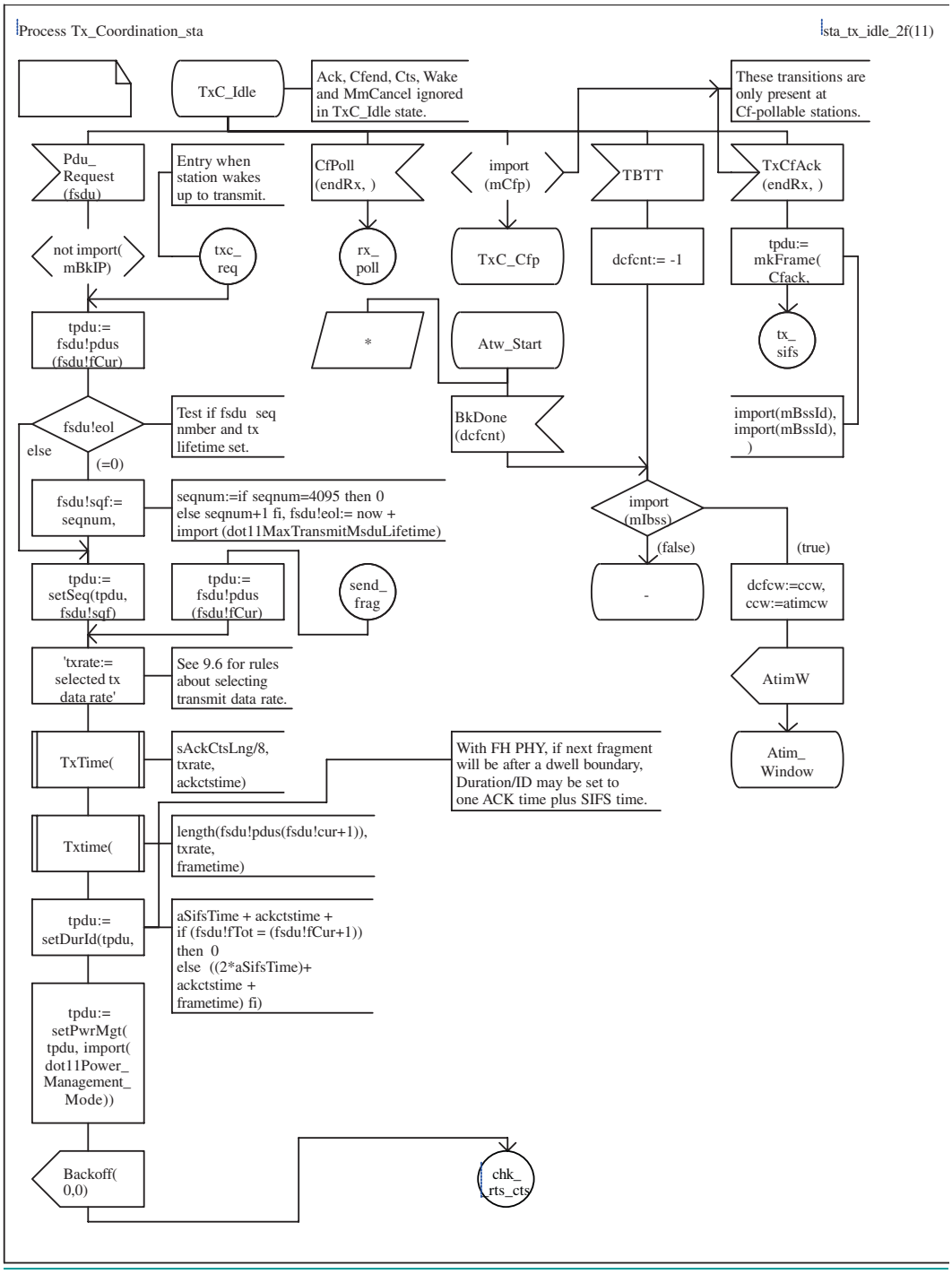

Copyright © 2003 IEEE. All rights reserved.

Authorized licensed use limited to: [redacted] Downloaded on January 16,2023 at 15:46:33 UTC from IEEE Xplore. Restrictions apply.

DELL
EXHIBIT 1019 - PAGE 71

Insert the following after the diagram sta_tx_dcf_3.1d(10):

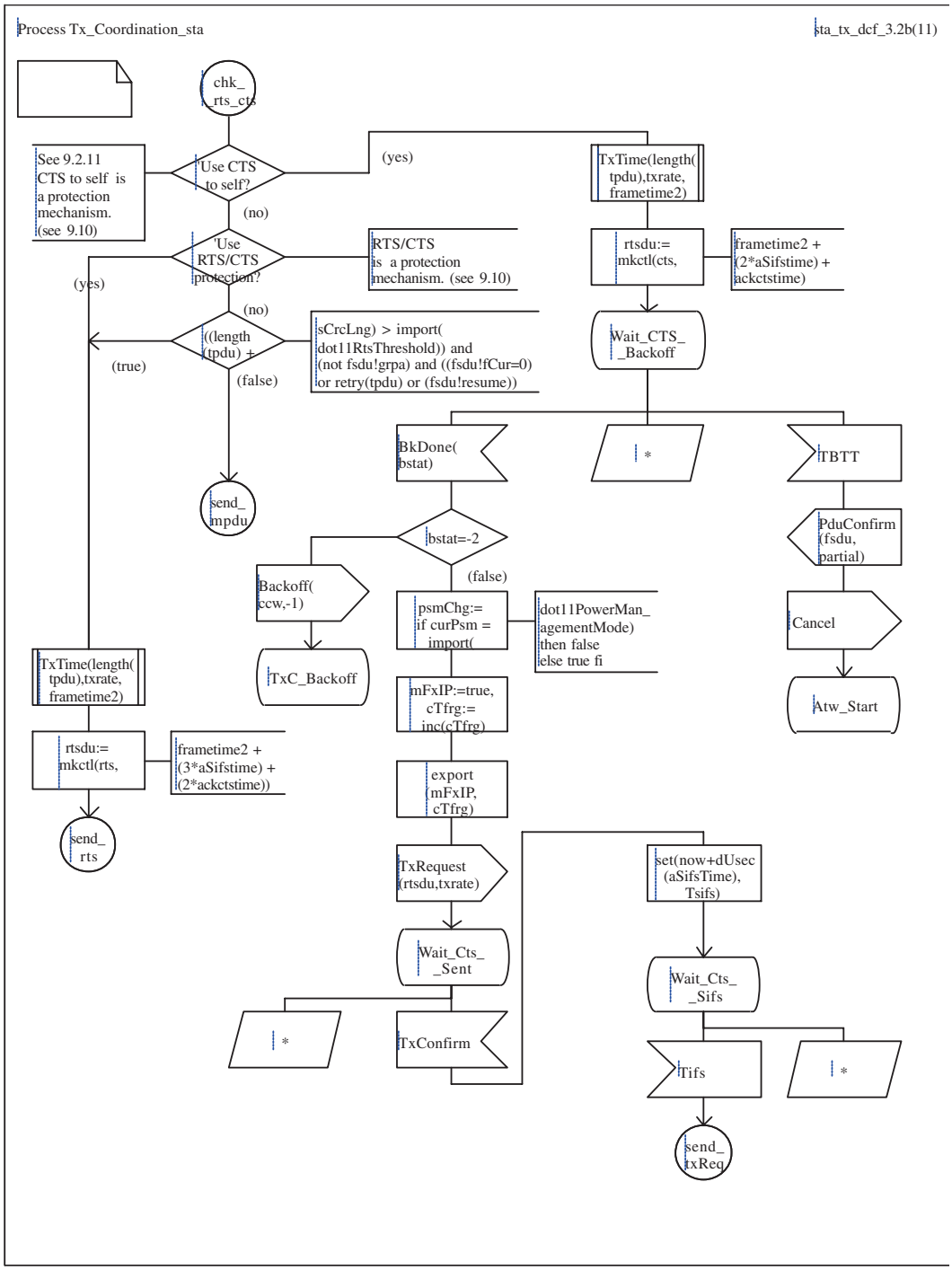

Copyright © 2003 IEEE. All rights reserved.

Authorized licensed use limited to: [redacted] Downloaded on January 16,2023 at 15:46:33 UTC from IEEE Xplore. Restrictions apply.

C.4 State machines for MAC access point

Replace the diagram ap_tx_idle_2e(9) with the following:

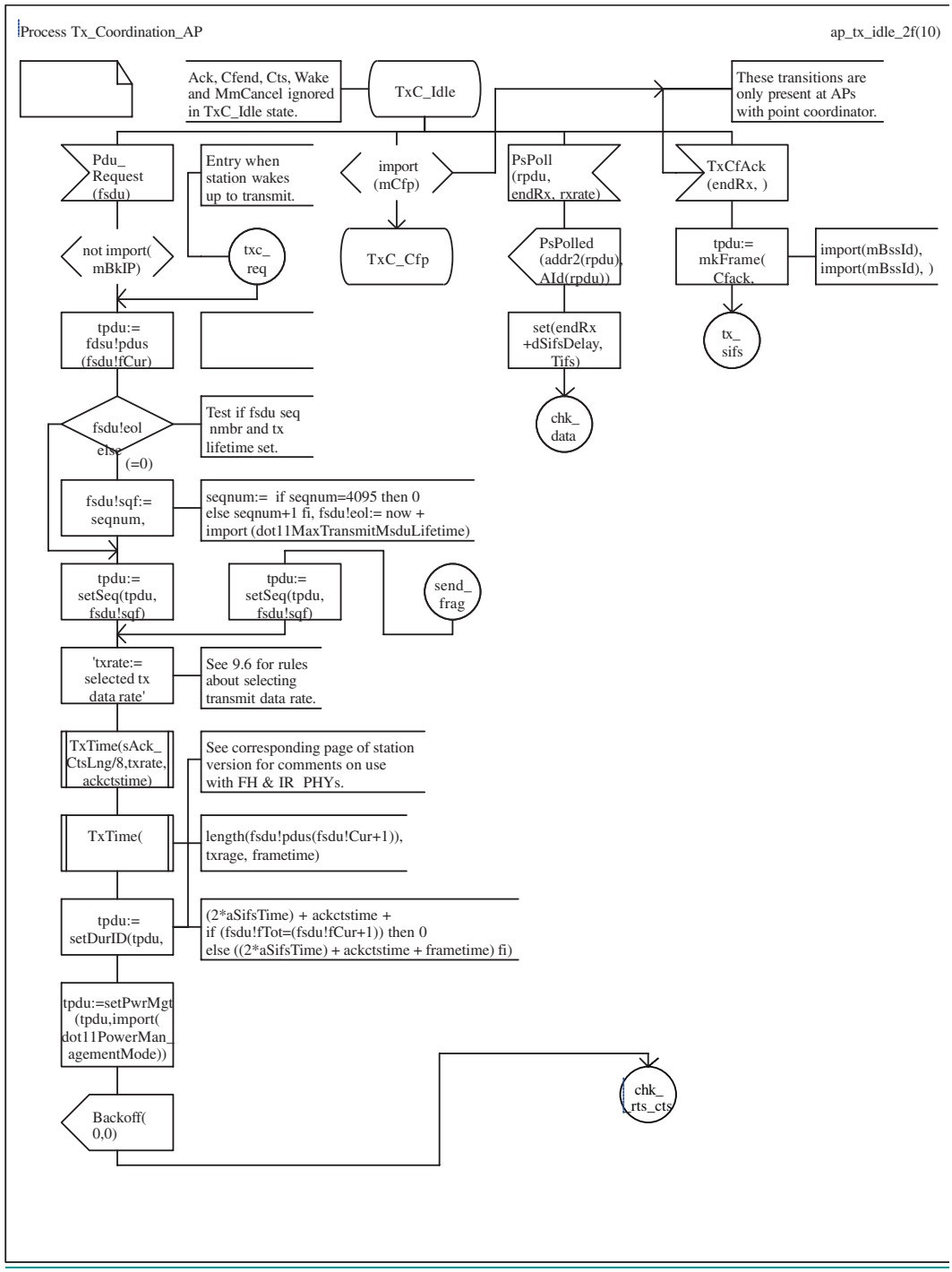

Copyright © 2003 IEEE. All rights reserved.

Authorized licensed use limited to: [redacted] Downloaded on January 16,2023 at 15:46:33 UTC from IEEE Xplore. Restrictions apply.

DELL
EXHIBIT 1019 - PAGE 73

Insert the following after the diagram ap_tx_dcf_3.1e(9):

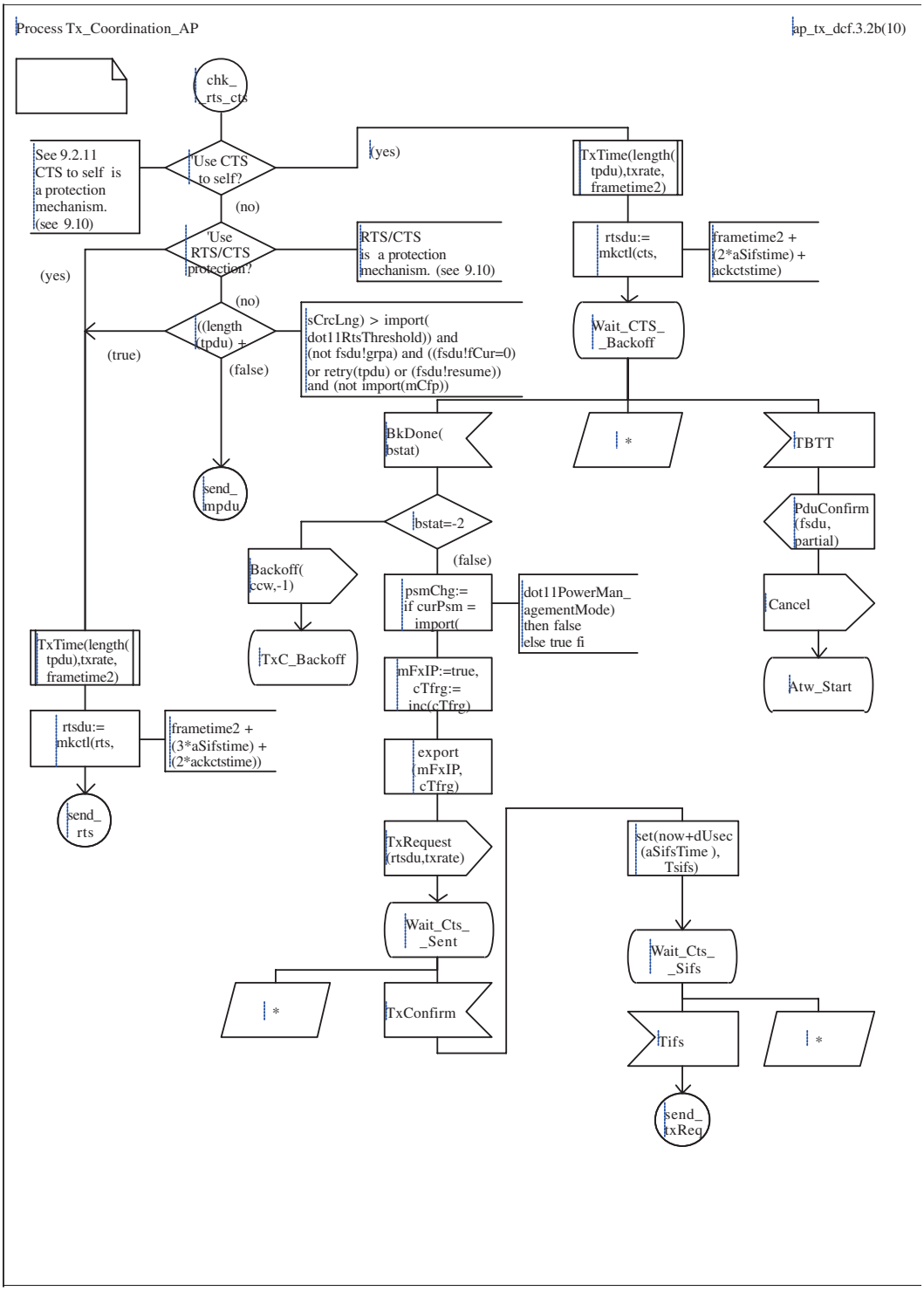

Copyright © 2003 IEEE. All rights reserved.

Authorized licensed use limited to: [redacted] Downloaded on January 16,2023 at 15:46:33 UTC from IEEE Xplore. Restrictions apply.

Annex D

(normative)

ASN.1 coding of MAC and PHY MIB

Change the following attribute definitions:

```
dot11PHYType OBJECT-TYPE
        SYNTAX INTEGER {fhss(1), dsss(2), irbaseband(3), ofdm(4), hrdsss(5), erp(6)}
        MAX-ACCESS read-only
        STATUS current
        DESCRIPTION
          "This is an 8-bit integer value that identifies the PHY
          type supported by the attached PLCP and PMD. Currently
          defined values and their corresponding PHY types are:

          FHSS 2.4 GHz = 01, DSSS 2.4 GHz = 02, IR Baseband = 03,

          OFDM 5GHz = 04, HRDSSS = 05, ERP = 06 "

    ::= { dot11PhyOperationEntry 1 }


dot11RTSThreshold OBJECT-TYPE
        SYNTAX INTEGER (0..2347)
        MAX-ACCESS read-write
        STATUS current
        DESCRIPTION
          "This attribute shall indicate the number of octets in an
          MPDU, below which an RTS/CTS handshake shall not be
          performed, except as RTS/CTS is used as a cross modulation
          protection mechanism as defined in 9.10. An RTS/CTS
          handshake shall be performed at the beginning of any frame
          exchange sequence where the MPDU is of type Data or
          Management, the MPDU has an individual address in the
          Address1 field, and the length of the MPDU is greater than
          this threshold. (For additional details, refer to Table 21
          in 9.7.) Setting this attribute to be larger than the
          maximum MSDU size shall have the effect of turning off the
          RTS/CTS handshake for frames of Data or Management type
          transmitted by this STA. Setting this attribute to zero
          shall have the effect of turning on the RTS/CTS handshake
          for all frames of Data or Management type transmitted by
          this STA. The default value of this attribute shall be
          2347."

    ::= { dot11OperationEntry 2 }


dot11SupportedDataRatesTxIndex OBJECT-TYPE
        SYNTAX Integer32 (1..~~8~~255)
        MAX-ACCESS not-accessible
        STATUS current
        DESCRIPTION
          "Index object that identifies which data rate to access. Range is
          1..~~8~~255."
```


Copyright © 2003 IEEE. All rights reserved.

Authorized licensed use limited to: [redacted] Downloaded on January 16,2023 at 15:46:33 UTC from IEEE Xplore. Restrictions apply.

DELL
EXHIBIT 1019 - PAGE 75

```
    ::= { dot11SupportedDataRatesTxEntry 1 }

dot11SupportedDataRatesRxIndex OBJECT-TYPE
        SYNTAX Integer32 (1..~~8~~255)
        MAX-ACCESS not-accessible
        STATUS current
        DESCRIPTION
          "Index object that identifies which data rate to access. Range is 1..
          ~~8~~255."

    ::= { dot11SupportedDataRatesRxEntry 1 }
```

In "Major sections" of Annex D, insert the following text to the end of the "PHY Attributes" section:

```
        --dot11PhyERPTable::= {dot11phy 14}
```

Insert the following into the IEEE 802.11 MIB in Annex D, between the section entitled "End of dot11 Hopping Pattern TABLE" and the section entitled "conformance information":

```
-- ********************************************************************

-- * dot11PhyERPEntry TABLE

-- ********************************************************************

dot11PhyERPTable OBJECT-TYPE
        SYNTAX SEQUENCE OF Dot11PhyERPEntry
        MAX-ACCESS not-accessible
        STATUS current
        DESCRIPTION
          "Entry of attributes for dot11PhyERPEntry. Implemented
          as a table indexed on ifIndex to allow for multiple
          instances on an Agent."

    ::= { dot11phy 14 }

dot11PhyERPEntry OBJECT-TYPE
        SYNTAX Dot11PhyERPEntry
        MAX-ACCESS not-accessible
        STATUS current
        DESCRIPTION
          "An entry in the dot11PhyERPEntry Table.
          ifIndex - Each 802.11 interface is represented by an
          ifEntry. Interface tables in this MIB module are indexed
          by ifIndex."
        INDEX {ifIndex}
    ::= { dot11PhyERPTable 1 }

Dot11PhyERPEntry ::= SEQUENCE {
        dot11ERPPBCCOptionImplemented TruthValue,
        dot11ERPBCCOptionEnabled TruthValue,
        dot11DSSSOFDMOptionImplemented TruthValue,
        dot11DSSSOFDMOptionEnabled TruthValue,
        dot11ShortSlotTimeOptionImplemented TruthValue,
```

Copyright © 2003 IEEE. All rights reserved.

Authorized licensed use limited to: [redacted] Downloaded on January 16,2023 at 15:46:33 UTC from IEEE Xplore. Restrictions apply.

DELL
EXHIBIT 1019 - PAGE 76

```
        dot11ShortSlotTimeOptionEnabled TruthValue }

dot11ERPPBCCOptionImplemented OBJECT-TYPE
        SYNTAX TruthValue
        MAX-ACCESS read-only
        STATUS current
        DESCRIPTION
          "This attribute, when true, shall indicate that the ERP-
          PBCC modulation option as defined in 19.6 is imple-
          mented. The default value of this attribute is false."

    ::= {dot11PhyERPEntry 1 }

dot11ERPBCCOptionEnabled OBJECT-TYPE
        SYNTAX TruthValue
        MAX-ACCESS read-write
        STATUS current
        DESCRIPTION
          "This attribute, when true, shall indicate that the ERP-
          PBCCoption as defined in 19.6 is enabled. The default
          value of this attribute is false."

    ::= {dot11PhyERPEntry 2 }

dot11DSSSOFDMOptionImplemented OBJECT-TYPE
        SYNTAX TruthValue
        MAX-ACCESS read-only
        STATUS current
        DESCRIPTION
          "This attribute, when true, shall indicate that the
          DSSS-OFDM option as defined in 19.7 is implemented. The
          default value of this attribute is false."

    ::= {dot11PhyERPEntry 3 }

dot11DSSSOFDMOptionEnabled OBJECT-TYPE
        SYNTAX TruthValue
        MAX-ACCESS read-write
        STATUS current
        DESCRIPTION
          "This attribute, when true, shall indicate that the
          DSSS-OFDM option as defined in 19.7 is enabled. The
          default value of this attribute is false."

    ::= {dot11PhyERPEntry 4 }


dot11ShortSlotTimeOptionImplemented OBJECT-TYPE
        SYNTAX TruthValue
        MAX-ACCESS read-write
        STATUS current
        DESCRIPTION
          "This attribute, when true, shall indicate that the
          Short Slot Time option as defined in 7.3.1.4 is imple-
          mented. The default value of this attribute is false."

    ::= {dot11PhyERPEntry 5}
```

 Copyright © 2003 IEEE. All rights reserved.

Authorized licensed use limited to: [redacted] Downloaded on January 16,2023 at 15:46:33 UTC from IEEE Xplore. Restrictions apply.

DELL
EXHIBIT 1019 - PAGE 77

```
dot11ShortSlotTimeOptionEnabled OBJECT-TYPE
        SYNTAX TruthValue
        MAX-ACCESS read-write
        STATUS current
        DESCRIPTION
          "This attribute, when true, shall indicate that the
          Short Slot Time option as defined in 7.3.1.4 is enabled.
          The default value of this attribute is false."

    ::= {dot11PhyERPEntry 6 }

-- ********************************************************************

-- * End of dot11PhyERPEntry TABLE

-- ********************************************************************
```

Insert a new compliance group to the compliance statements just before the section "OPTIONAL-GROUPS":

```
    GROUP dot11PhyERPComplianceGroup
        DESCRIPTION
          "Implementation of this group is required when object
          dot11PHYType has the value of ERP. This group is mutu-
          ally exclusive with the groups dot11PhyIRComplianceGroup
          and dot11PhyFHSSComplianceGroup."
```

Insert the following text into the IEEE 802.11 MIB in Annex D, after the definition of the dot11PhyFHSSComplianceGroup2 Object Group:

```
dot11PhyERPComplianceGroup OBJECT-GROUP
        OBJECTS {dot11CurrentChannel,
          dot11ShortPreambleOptionImplemented,
          dot11ChannelAgilityPresent,
          dot11ChannelAgilityEnabled,
          dot11DSSSOFDMOptionImplemented,
          dot11DSSSOFDMOptionEnabled,
          dot11PBCCOptionImplemented,
          dot11ERPPBCCOptionImplemented,
          dot11ShortSlotTimeOptionImplemented,
          dot11ShortSlotTimeOptionEnabled }
        STATUS current
        DESCRIPTION
          "Attributes that configure the ERP."

    ::= { dot11Groups 24}
```

Copyright © 2003 IEEE. All rights reserved.

Authorized licensed use limited to: [redacted] Downloaded on January 16,2023 at 15:46:33 UTC from IEEE Xplore. Restrictions apply.

DELL
EXHIBIT 1019 - PAGE 78