IN THE UNITED STATES DISTRICT COURT
FOR THE DISTRICT OF DELAWARE

BELDEN TECHNOLOGIES, INC. and, BELDEN CDT (CANADA) INC.	)	
Plaintiffs,	)	Case No. 08-0063-SLR
v.	)	
SUPERIOR ESSEX INC. and SUPERIOR ESSEX COMMUNICATIONS LP	)	REDACTED - Public Version
Defendants.	)	

PLAINTIFFS BELDEN TECHNOLOGIES, INC.'S AND BELDEN CDT (CANADA), INC.'S MEMORANDUM IN SUPPORT OF THEIR MOTION FOR PARTIAL SUMMARY JUDGMENT NO. 2: NO PATENT INVALIDITY BY ANTICIPATION

YOUNG CONAWAY STARGATT & TAYLOR, LLP
John W. Shaw (#3362)
Karen E. Keller (#4489)
Pilar G. Kraman (#5199)
The Brandywine Building, 17th Floor
1000 West Street
Wilmington, DE 19801
Telephone (302) 571-6600
pkraman@ycst.com

FOLEY & LARDNER LLP
Matthew B. Lowrie (admitted *pro hac vice*)
Marc N. Henschke (admitted *pro hac vice*)
Michelle A. Flores (admitted *pro hac vice*)
111 Huntington Avenue
Boston, MA 02199
Telephone: (617) 342-4000

Attorneys for Belden Technologies, Inc. and Belden CDT (Canada) Inc.

December 4, 2009

CommScope v. Belden
IPR2023-01061, -01062
CommScope Ex. 1061

TABLE OF CONTENTS

Page

I. NATURE AND STAGE OF THE PROCEEDINGS 1

II. SUMMARY OF ARGUMENT 1

III. STATEMENT OF FACTS 2

A. The '095 Patent-In-Suit And Superior Essex's Allegedly Anticipatory Prior Art 2

1. Overview Of The '095 Patent-In-Suit And Its Asserted Claim 27 2

2. The Prior Art '866 Patent 4

3. The Prior Art '645 Patent 6

B. The '999 Patent-In-Suit And Superior Essex's Allegedly Anticipatory Prior Art 8

1. Overview Of The '999 Patent-In-Suit And Its Asserted Claim 2 8

2. The Prior Art '866 Patent 9

C. The '537 Patent-In-Suit And Superior Essex's Allegedly Anticipatory Prior Art 9

1. Overview Of The '537 Patent-In-Suit And Its Asserted Claim 19 9

2. The Prior Art '629 Patent 10

D. The '116 Patent-In-Suit And Superior Essex's Allegedly Anticipatory Prior Art 12

1. Overview Of The '116 Patent-In-Suit And Its Asserted Claims 4 And 7 12

2. The Prior Art '064 Patent 13

E. The '503 Patent-In-Suit And Superior Essex's Allegedly Anticipatory Prior Art 15

1. Overview Of The '503 Patent-In-Suit And Its Asserted Claim 1 15

2. The Prior Art '485 Patent 16

3. The Prior Art '307 Patent 17

4. The Prior Art '910 Patent 19

5. The Prior Art '635 Patent 20

IV. ARGUMENT 21

A. Applicable Legal Standards 21

1. Standard Governing Summary Judgment 21

2. Standard Governing Invalidity By Anticipation 22

3. Standards Governing Summary Judgment Of No Anticipation 25

B. Belden Is Entitled To A Summary Judgment That Claim 27 Of The '095 Patent-In- Suit Is Not Anticipated By The Prior Art '866 Or '645 Patents 26

1. There Is No Genuine Dispute That The Prior Art '866 Patent Fails To Disclose Each And Every Element Of Claim 27 26

2. There Is No Genuine Dispute That The Prior Art '645 Patent Fails To Disclose Each And Every Element Of Claim 27 28

C. Belden Is Entitled To A Summary Judgment That Claim 2 Of The '999 Patent-In- Suit Is Not Anticipated By The Prior Art '866 Patent 30

D. Belden Is Entitled To A Summary Judgment That Claim 19 Of The '537 Patent-In- Suit Is Not Anticipated By The Prior Art '629 Patent 31

E. Belden Is Entitled To A Summary Judgment That Claims 4 And 7 Of The '116 Patent-In-Suit Are Not Anticipated By The Prior Art '064 Patent 34

F. Belden Is Entitled To A Summary Judgment That Claim 1 Of The '503 Patent-In-Suit Is Not Anticipated By The Prior Art '485, '307, '910, Or '635 Patents 35

1. There Is No Genuine Dispute That The Prior Art '485 Patent Fails To Disclose Each And Every Element Of Claim 1 35

2. There Is No Genuine Dispute That The Prior Art '307 Patent Fails To Disclose Each And Every Element Of Claim 1 37

3. There Is No Genuine Dispute That The Prior Art '910 Patent Fails To Disclose Each And Every Element Of Claim 1 38

4. There Is No Genuine Dispute That The Prior Art '635 Patent Fails To Disclose Each And Every Element Of Claim 1 39

V. CONCLUSION 40

TABLE OF AUTHORITIES

Page(s)

Federal Cases

Advanced Display Sys. Inc. v. Kent State Univ.,
212 F.3d 1272, 1282 (Fed. Cir. 2000) ..... *Passim*

Al-Site Gorp. v. USI International Inc.,
174 F.3d 1308, 1323 (Fed. Cir. 1999) 25

Amgen Inc. v. Hoechst Marion Roussel, Inc.,
314 F. 3d 1313, 1354 (Fed. Cit. 2003) 24

Anderson v. Liberty Lobby, Inc.,
477 U.S. 242, 248-49 (1986) 22

Bell Communications Research, Inc. v. Vitalink Communications Corp.,
55 F.3d 615, 620 (Fed. Cir. 1995) 32

Celotex Corp. v. Catrett,
477 U.S. 317, 322-23 (1986) 21-22

Connell v. Sears Roebucks & Co.,
722 F.2d 1542, 1548 (Fed. Cir. 1983) 23

Continental Can Co. USA v. Monsanto Co.,
948 F.2d 1264, 1268 (Fed. Cir. 1991) 24

Elan Pharmaceuticals v. Mayo Foundation For Medical Education And Research,
346 F.3d 1051, 1054 (Fed. Cir. 2003) 25

Finsar Corp. v. DirecTV Group, Inc.,
523 F.3d 1323, 1334-35 (Fed. Cir. 2008) ..... *Passim*

Glaverbel Societe Anonyme v. Northlake Mktg. & Supply, Inc.,
45 F.3d 1550, 1554 (Fed. Cir. 1995) 24

Hewlett-Packard Co. v. Bausch & Lomb Inc.,
909 F.2d 1464, 1467 (Fed. Cir. 1990) 25

IGT v. Bally Gaming International Inc.,
610 F. Supp. 2d 288, 325, 327 (D. Del. 2009) (Robinson, J.) 25

Intervet Am., Inc. v. KeeVet Labs., Inc.,
887 F.2d 1050, 1054 (Fed. Cir. 1989) 25

CommScope v. Belden
IPR2023-01061, -01062
CommScope Ex. 1061

Invitrogen Corp. v. Biocrest Mfg., L.P.,
424 F.3d 1374, 1378 (Fed. Cir. 2005).....22

Key Pharms. v. Hercon Labs. Corp.,
161 F.3d 709, 714 (Fed. Cir. 1998).....22

Magnivision, Inc. v. Bonneau Co.,
115 F.3d 956, 958 (Fed. Cir. 1997).....22

Matsushita Elec. Indus. Co. v. Zenith Radio Corp.,
475 U.S. 574, 586-87 (1986).....22

Metabolite Labs., Inc. v. LabCorp. Of Am. Holdings,
370 F.3d 1354, 1368 (Fed. Cir .2004).....*Passim*

Novo Nordisk Pharmaceuticals, Inc. v. Bio-Technology General Corp.,
424 F.3d 1347, 1355 (Fed. Cir. 2005).....25

Pharmacia & Upjohn Co. v. Sicor Inc.,
447 F. Supp. 2d 363, 377 (D. Del. 2006).....26

Phillips v. AWH Corp.,
415 F.3d 1303, 1313 (Fed. Cir. 2005).....29-32

PowerOasis, Inc. v. T-Mobile USA, Inc.,
522 F.3d 1299, 1303 (Fed. Cir. 2008).....22

Rotec Indus., Inc. v. Mitsubishi Corp.,
215 F.3d 1246, 1250-51 (Fed. Cir. 2000).....22

Scripps Clinic & Research Found. v. Genentech, Inc.,
927 F.2d 1565, 1576 (Fed. Cir. 1991).....*Passim*

Studiengesellschaft Kohle, m.b.H. v. Dart Industries, Inc.,
726 F.2d 724, 727 (Fed. Cir. 1984).....24

Telecordia Technologies, Inc. v. Lucent Technologies, Inc.,
514 F. Supp. 2d 598, 613 (D. Del. 2007).....26

Teleflex, Inc. v. Ficosa North America Corp.,
299 F.3d 1313, 1335 (Fed. Cir. 2002).....23

Trintec Industries, Inc. v. Top-U.S.A. Corp.,
295 F.3d 1292, 1297 (Fed. Cir. 2002).....24, 34, 38-39

Federal Statutes

35 U.S.C. §102 ..... *Passim*

35 U.S.C. §282 25

Miscellaneous Authorities

Fed. R. Civ. P. 56(c) 21

Robert C. Faber, Landis On Mechanics Of Patent Claim Drafting, (4th ed. 2001) 39-40

I. NATURE AND STAGE OF THE PROCEEDINGS

This is a patent infringement case. Plaintiffs, Belden CDT (Canada) and Belden Technologies, Inc. (collectively "Belden" or "Plaintiffs") are the owners of certain patents related to high speed data cables including U.S. Patent No. 5,424,491 (the "'491 Patent-in-Suit"), U.S. Patent No. 6,074,503 (the "'503 Patent-in-Suit"), U.S. Patent No. 7,135,641 (the "'641 Patent-in-Suit"), U.S. Patent No. 7,339,116 (the "'116 Patent-in-Suit"), U.S. Patent No. 6,570,095 (the "'095 Patent-in-Suit"), U.S. Patent No. 6,998,537 (the "'537 Patent-in-Suit"), U.S. Patent No. 7,179,999 (the "'999 Patent-in-Suit"), (collectively "the Patents-in-Suit").

On January 29, 2008, Belden filed this lawsuit against defendants Superior Essex, Inc., and Superior Essex Communications LLP (collectively "Superior Essex" or "Defendants"), a manufacturer of high speed data cables. See (D.I. 52). Belden alleges that Superior Essex has infringed and continues to infringe the Patents-in-Suit. (Id.).

At present, the parties have completed fact discovery on liability issues and exchanged opening and rebuttal expert reports on issues of infringement and validity. The parties have deposed the technical experts. On December 4, 2009 the Parties filed a Joint Stipulation Regarding Infringement and Non-Infringement. (D.I. 106). Concurrent with the filing of this motion, the parties have also separately served and filed their Opening Claim Construction Briefs. The Court has bifurcated the liability and damages portions of the litigation, with further damages discovery still to be completed. This matter is set for jury trial on June 1, 2009. See (D.I. 27).

II. SUMMARY OF ARGUMENT

1. To overcome the presumption of validity accorded to the Patents-in-Suit, Defendants must provide clear and convincing evidence of invalidity. Superior Essex's invalidity arguments, however, fail to meet the standards promulgated by the courts and the patent laws for

proving invalidity by anticipation under 35 U.S.C. §102. In short, Superior Essex's anticipation arguments are based upon purported prior art references that, by its own admissions, fail to disclose each and every element of the asserted claims of the Patent-in-Suit as required for a finding of anticipation.

2. The material facts relating to what the anticipatory prior art references disclose are not in dispute. Therefore, all that remains is the legal question of comparing these references to the claims of the Patents-In-Suit, as properly construed, which results in the undeniable conclusion that the prior art references do not disclose each and every element of the claimed inventions. Accordingly, Belden is entitled to summary judgment of no anticipation because Superior Essex is unable to establish an essential element of its defense of invalidity by anticipation.

III. STATEMENT OF FACTS

A. The '095 Patent-In-Suit And Superior Essex's Allegedly Anticipatory Prior Art

1. Overview Of The '095 Patent-In-Suit And Its Asserted Claim 27

Belden alleges infringement in this case under U.S. Patent No. 6,570,095, entitled "*Multi-Pair Data Cable With Configurable Core Filling And Pair Separation*" (the "'095 Patent-In-Suit") (Exh. 1 to Flores Decl.).[1] As illustrated by the diagrams below that correspond to certain preferred embodiments, the inventions of the '095 Patent-In-Suit generally relate to a high-speed data communications cable (10) containing two or more twisted pairs (12) of insulated conductors (13). The specification teaches that when twisted pairs are placed in too close a proximity to each other within a cable, the problem of "crosstalk" arises in which electrical

[1] As used herein, the term "Flores Decl." is a reference to the Declaration Of Michelle A. Flores In Support Of Plaintiffs Belden Technologies, Inc.'s And Belden CDT (Canada), Inc.'s Motion For Partial Summary Judgment No. 2: No Patent Invalidity By Anticipation, filed concurrently herewith under separate cover.

energy may be undesirably transferred from one twisted pair to another. The '095 Patent-In-Suit solves this problem through the use of a dielectric pair separator (14) which extends longitudinally down the interior length of the cable to form multiple separate channels or grooves (15) in which the twisted pairs are individually disposed. The '095 dielectric pair separator is preferably comprised of light-weight, configurable, highly-flexible materials such as strips of polymer tape (14). To produce the finished cable in certain embodiments, the twisted pairs and the dielectric pair separator are twisted together about a common central axis before being completely enclosed within an outer cable jacket (16).

As reproduced from the patent specification, Figure 4 depicts one embodiment of the '095 invention, while Figure 5 shows a radial cross-sectional view of that same embodiment:

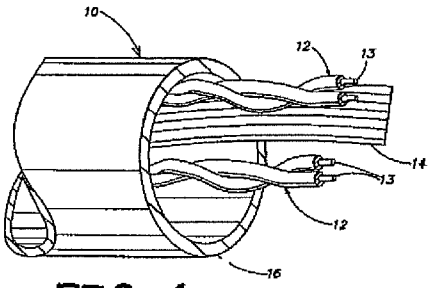

FIG. 4

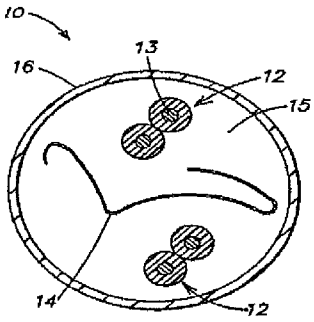

FIG. 5

Among the claims of the '095 Patent-In-Suit that Belden is asserting in this case is Claim 27 which recites the following:

> **27.** A data communications cable comprising:
> **[27a]** a first twisted pair of insulated conductors;
> **[27b]** a second twisted pair of insulated conductors;
> **[27c]** a configurable dielectric pair separator that separates the first and second twisted pairs of conductors, the configurable dielectric pair separator being substantially flat;
> **[27d]** a jacket enclosing the first and second twisted pairs of insulated conductors and the dielectric pair separator; and
> **[27e]** wherein the configurable dielectric pair separator, the first twisted pair of insulated conductors and the second twisted pair of insulated conductors are twisted about a common central

axis to form a twisted pair cable; and wherein the configurable dielectric pair separator is arranged within the jacket to form at least two grooves.

2. **The Prior Art '866 Patent**

In his Expert Report served on September 22, 2009, Superior Essex's expert witness on invalidity, Les Baxter ("Baxter"), opined that asserted Claim 27 of the '095 Patent-In-Suit is invalid within the meaning of 35 U.S.C. §102 because it is allegedly anticipated by prior art German patent DE 297 19 866 A1 (the "'866 patent").

The prior art '866 patent discloses a shielded data transmission cable that contains at least two twisted pairs of insulated conductors, certain shielding elements "consisting of electrically conducting material," and an overall outer cable covering. See (Flores Decl. at Exh. 2, p. 1 & Claim 1). As to the function of the shielding elements, the '866 disclosure teaches that by electrically isolating the individual twisted pairs both from each other and from the outer cable covering, "optimized transmission characteristics [are achieved], especially a defined wave resistance and a low coupling resistance, low damping, and low crosstalk." (Id. at pp. 1-2). According to the specification, the prior art approach to shielding had been that each of the "individual conductor pairs was encased in a metal shielding or the like," but that this had resulted in "high manufacturing cost" and was "relatively expensive." (Id.). By contrast, the '866 invention aims to provide a lower cost alternative in which "electrical shielding" is accomplished with pair separators (5, 11, 12) that are universally defined as being "shields." (Id.). These pair separator shields extend longitudinally down the interior length of the cable, "subdividing the cable cross section into at least two shielding sectors,... [with] a conductor pair running in each shielded sector, so that the two conductor pairs are shielded against each other and externally." (Id.). The '866 Patent teaches that its pair separator shields "consist[] of

electrically conducting material," preferably "metal foils, especially aluminum foils or aluminum foils laminated by plastic." (Id. at p. 3 & Claim 1).

Consistent with the diagrams reproduced below, the '866 patent discloses five different overall shape profiles for its pair separator shields when viewed in cross-section of the embodying cables. With respect to Figure 1, for example, the specification states that the pair separator shields "viewed in the cross section of the cable, have the shape of the letter [sic, number] '6.'" (Flores Decl. at Exh. 2, p. 4). In turn, the '866 patent describes the pair separator shields in Figure 2 as having similar number "6" shapes, except that for one of these separators the "end area of the round section" is completely closed. (Id. at p. 5). In Figure 3, the two number "6" shaped pair separator shields "touch roughly in the center of the cable" such that they could potentially be "glued" together. (Id.). As to Figure 4, the pair separator shields "viewed in the cross section of the data transmission cable…[have] the form of the number '8.'" (Id.). Finally, in Figure 5 one of the pair separator shields "has a figure '8' form," and the other is in the shape of a "circular partial shielding." (Id. at pp. 5-6).

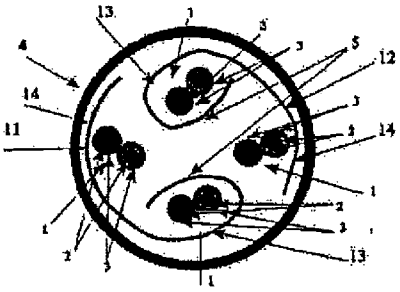

Figure 1

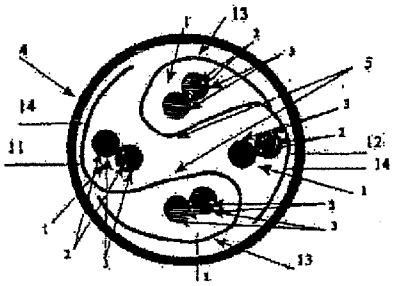

Figure 2

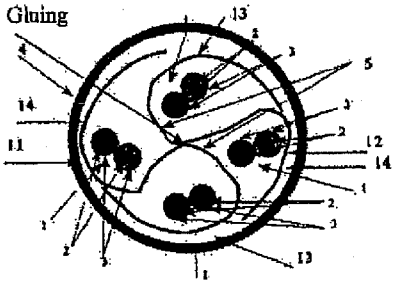

Figure 3

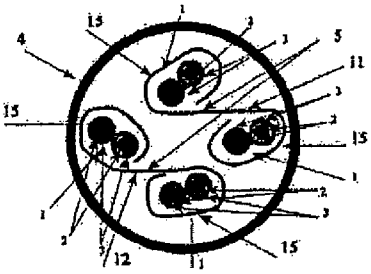

Figure 4

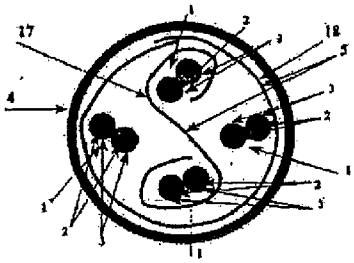

Figure 5

[redacted] This can be readily confirmed by a review of the PTO's first office action in the '095 prosecution, mailed on October 22, 2001, in which the Examiner expressly discussed the laminated metal foil separators that are described in U.S. Patent No. 3,911,200 issued to Simons et al. (Flores Decl. at Exh. 5, pp. 5-6).

3. The Prior Art '645 Patent

In his Expert Report served on September 22, 2009, Superior Essex's expert witness on invalidity, Baxter, opined that asserted Claim 27 of the '095 Patent-In-Suit is invalid within the meaning of 35 U.S.C. §102 because it is allegedly anticipated by prior art Japanese patent JP 05-290645A (the "'645 patent").

The prior art '645 patent discloses the structure of a certain "aligned pair-type cable or quad-type cable" (1). (Flores Decl. at Exh. 6, pp. 1-2). To make this cable, individual conductor wires are coated with insulation and then are stranded (*i.e.*, twisted) together two at a time to form twisted pairs of conductors (2). (Id.). The twisted pairs are next aligned in parallel with

[2] Baxter makes this same point in a textbook he has authored, explaining that shielded twisted-pair cables meet their performance requirements by relying upon the "conductive" nature of the shield "to block unwanted noise in electromagnetic radiation." See Baxter, Les, "*Residential Networks*" (Thompson Delmar Learning 2006 ed.) (Flores Decl. at Exh. 4, p. 34).

one another and fused onto a tape sheet (3) which is typically covered with some type of fusing agent or adhesive. (Id.). The tape sheet is then "wound into a coil-like shape" with the twisted pairs remaining in their fused positions spaced apart from one another. (Id.). An outer-casing (4) is used to enclose the cable. (Id.).

As reproduced from the patent specification, Figure 1 shows a perspective view of one embodiment of the '645 invention, while Figure 6 depicts a radial cross-sectional view of a related embodiment:

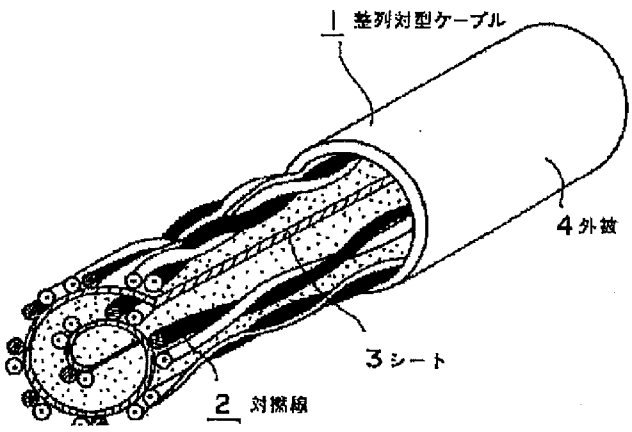

Figure 1

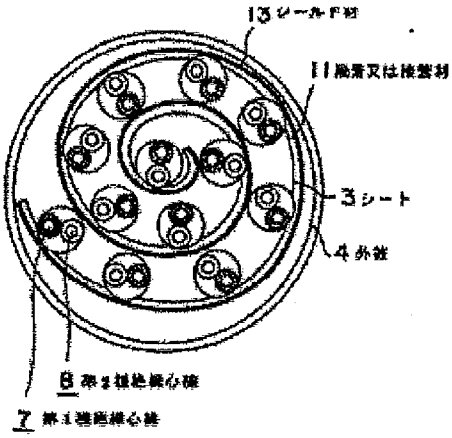

Figure 2

[redacted]

[redacted]

[redacted]

B. The '999 Patent-In-Suit And Superior Essex's Allegedly Anticipatory Prior Art

1. Overview Of The '999 Patent-In-Suit And Its Asserted Claim 2

Belden alleges infringement in this case under U.S. Patent No. 7,179,999, entitled "*Multi-Pair Data Cable With Configurable Core Filling And Pair Separation*" (the "'999 Patent-In-Suit") (Exh. 7 to Flores Decl.). The '999 Patent-In-Suit is closely related to the '095 Patent-In-Suit already discussed above because it issued from a series of continuations of the application that matured into the '095 Patent-In-Suit. This means that both of these Patents-In-Suit share a virtually identical specification, and accordingly that the general overview of the '095 Patent-In-Suit previously provided would apply equally here as well. See, supra, pp. 2-3. In sum, the only principal difference between these two Patents-In-Suit is to be found in their respective claim sets.

In the present case, Belden is asserting dependent Claim 2 of the '999 Patent-In-Suit. The text of Claim 2 is set forth below, preceded by the underlying text of independent Claim 1 from which it depends:

> **1.** An unshielded twisted pair communications cable comprising:
>
> **[1a]** a plurality of twisted pairs of insulated conductors including a first twisted pair of insulated conductors and a second twisted pair of insulated conductors;
>
> **[1b]** a configurable tape separator disposed between the plurality of twisted pairs of conductors in the unshielded twisted pair communications cable and arranged so as to separate the first twisted pair of insulated conductors from the second twisted pair of insulated conductors; and
>
> **[1c]** a jacket enclosing the plurality of twisted pairs of insulated conductors and the configurable tape separator;
>
> **[1d]** wherein the plurality of twisted pairs of insulated conductors and the configurable tape separator are cabled about a common axis to form the unshielded twisted pair communications cable; and
>
> **[1e]** wherein the configurable tape separator is substantially non-conductive.
>
> **2.** The unshielded twisted pair communications cable as claimed in claim 1, wherein the configurable pair separator is arranged so as to define at least two channels and wherein the first twisted pair of insulated conductors is disposed at least partially within a first channel and the second twisted pair of insulated conductors is disposed at least partially within a second channel.

2. The Prior Art '866 Patent

In his Expert Report served on September 22, 2009, Superior Essex's expert witness on invalidity, Baxter, opined that asserted Claim 2 of the '999 Patent-In-Suit is invalid within the meaning of 35 U.S.C. §102 because it is allegedly anticipated by the prior art '866 patent. This is the same '866 patent that Belden has already fully described above as part of its earlier discussion of the '095 Patent-In-Suit. See, supra, pp. 4-5.

C. The '537 Patent-In-Suit And Superior Essex's Allegedly Anticipatory Prior Art

1. Overview Of The '537 Patent-In-Suit And Its Asserted Claim 19

Belden alleges infringement in this case under U.S. Patent No. 6,998,537, entitled "*Multi-Pair Data Cable With Configurable Core Filling And Pair Separation*" (the "'537 Patent-In-Suit") (Exh. 8 to Flores Decl.). The '537 Patent-In-Suit is closely related to both the '095 and

'999 Patents-In-Suit already discussed above because it issued from a continuation of the application that matured into the '095 Patent-In-Suit. This means that all three of these Patents-In-Suit share a virtually identical specification, and accordingly that the general overview of the '095 Patent-In-Suit previously provided would apply equally here as well. See, supra, pp. 2-3. In sum, the only principal difference among these three Patents-In-Suit is to be found in their respective claim sets.

In the present case, Belden is asserting Claim 19 of the '537 Patent-In-Suit which recites the following:

> **19.** An unshielded communications cable comprising:
> **[19a]** a plurality of twisted pairs of insulated conductors comprising a first twisted pair of insulated conductors and a second twisted pair of insulated conductors;
> **[19b]** a substantially flat configurable dielectric separator that consists of nonconductive, dielectric materials disposed between the plurality of twisted pairs of conductors that separates the first twisted pair of insulated conductors from the second twisted pair of insulated conductors; and
> **[19c]** a jacket enclosing the plurality of twisted pairs of insulated conductors and the configurable dielectric separator;
> **[19d]** wherein the substantially flat configurable dielectric separator includes a foamed polymer.

2. The Prior Art '629 Patent

In his Expert Report served on September 22, 2009, Superior Essex's expert witness on invalidity, Baxter, appears to opine that asserted Claim 19 of the '537 Patent-In-Suit is invalid within the meaning of 35 U.S.C. §102 because it is allegedly anticipated by U.S. Patent No. 4,755,629 (the "'629 patent").

As depicted in Figure 5 reproduced below, the prior art '629 patent generally discloses a local area network cable (20) in which each twisted pair of insulated conductors (43) is individually enclosed within its own tubular member (51) made of a plastic material. See (Exh. 9 to Flores Decl.). A metallic shield (60) encloses the tubular members, and a plastic jacket (80)

can be used to enclose the entire cable. With respect to a certain preferred embodiment, Figure 7 below shows an end view of a portion of cable (20) in which a plastic "S-shaped preform" (58) has been substituted in place of the tubular members. ('629 patent at 5:64 – 6:14). In addition, the specification teaches that for another preferred embodiment, the "S-shaped preform **58** in FIG. 7 may be replaced with a tape which is made of a dielectric material and which is wrapped about the conductor pairs to cause each pair to be enclosed substantially in a dielectric portion of the buffer system." (Id. at 6:52-56).

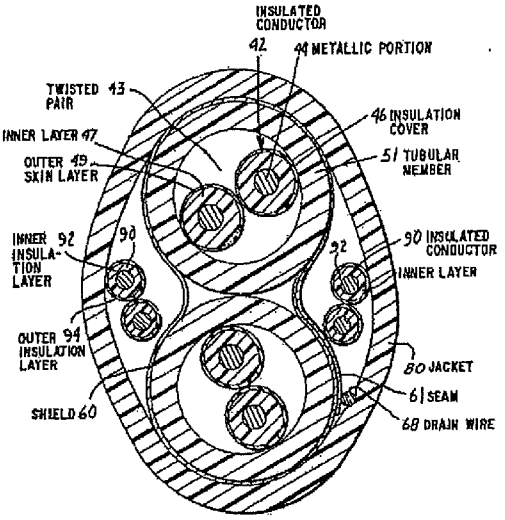

Fig. 5

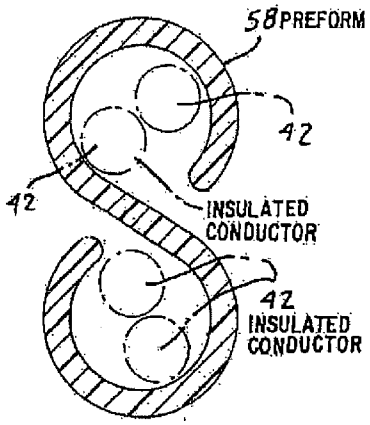

Fig. 7

[redacted]

D. The '116 Patent-In-Suit And Superior Essex's Allegedly Anticipatory Prior Art

1. Overview Of The '116 Patent-In-Suit And Its Asserted Claims 4 And 7

Belden alleges infringement in this case under U.S. Patent No. 7,339,116, entitled "*High Performance Data Cable*" (the "'116 Patent-In-Suit) (Exh. 10 to Flores Decl.). As depicted in the Figure 1 diagram below that corresponds to a certain preferred embodiment, the inventions of the '116 Patent-In-Suit generally relate to a "high performance data cable…[that meets] exacting specifications with regard to data speed and electrical characteristics." ('116 Patent at 1:23-25). The '116 cable has an interior star-shaped support (10) running down its longitudinal length which features a plurality of projections (14) that extend outwardly from its center to create grooves in which individual twisted pairs (34) are disposed. A cable covering that consists of an outer jacket (36), a shield (40), and a binder sheet (38) serves to enclose the interior star-shaped support and the twisted pairs. For certain embodiments, the projections (14) make contact with at least some part of the cable covering.

FIG. 1

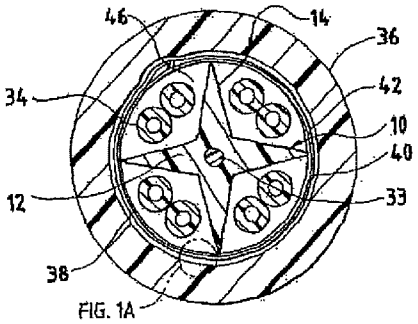

In the present case, Belden is asserting Claims 4 and 7 of the '116 Patent-In-Suit which respectively recite the following:

> **4.** A data cable having a plurality of twisted pair conductors, a cable covering, and an interior support comprising:
> said interior support being unshielded and having:

[4a] a longitudinally extending central portion forming a portion of said support; a plurality of projections extending from said central portion;

[4b] each projection of said plurality of projections being adjacent to two other projections of said plurality of projections, said plurality of projections forming a plurality of adjacent projections;

[4c] an open space defined by each of said plurality of adjacent projections;

[4d] said cable covering contacting each projection;

[4e] only one twisted pair conductor from said plurality of twisted pair conductors disposed in each open space.

7. A data cable having a plurality of twisted pair conductors, a cable covering, and an interior support comprising:

said interior support being unshielded and having:

[7a] a longitudinally extending central portion forming a portion of said support; a plurality of projections extending from said central portion;

[7b] each projection of said plurality of projections being adjacent to two other projections of said plurality of projections, said plurality of projections forming a plurality of adjacent projections;

[7c] an open space defined by each of said plurality of adjacent projections;

[7d]only one twisted pair conductor from said plurality of twisted pair conductors disposed in each open space.

2. <u>The Prior Art '064 Patent</u>

In his Expert Report served on September 22, 2009, Superior Essex's expert witness on invalidity, Baxter, opined that asserted Claims 4 and 7 of the '116 Patent-In-Suit are invalid within the meaning of 35 U.S.C. §102 because they are allegedly anticipated by U.S. Patent No. 3,209,064 (the "'064 patent").

The prior art '064 patent discloses an electric signal transmission cable from the early 1960s that was designed for use with "television picture signals alone or in conjunction with the accompanying sound signals at audio or carrier frequencies." ('064 patent at 2:14-16) (Exh. 11 to Flores Decl.). With respect to the embodiment from Figure 3 reproduced below, there is a multi-channeled interior structure comprising a central portion (21) and six equally spaced fins

(22) that create cavities running down the longitudinal length of the cable in which individual twisted pairs (23/24) are disposed. See ('064 patent at 3:5-32). Moving from the inside of the cable outward, this interior assembly is lapped by a layer of insulating material (25), which is surrounded by a "layer of dielectric material (26) which has a poor power factor," and next by a conductive screening member shield (27), and finally by an outer protective coating (28). As seen in Figure 3, the tips of the fins (22) may be in contact with the lapping layer (25).

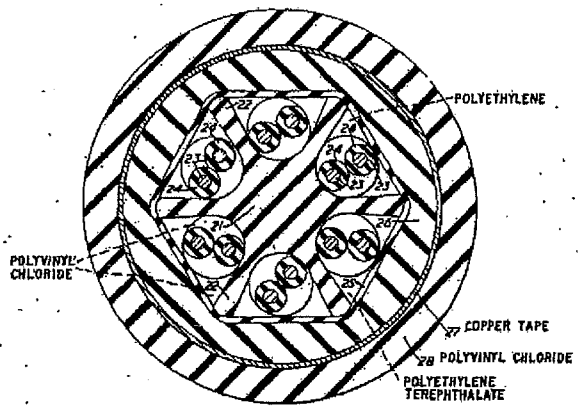

FIG. 3.

[redacted]

E. The '503 Patent-In-Suit And Superior Essex's Allegedly Anticipatory Prior Art

1. Overview Of The '503 Patent-In-Suit And Its Asserted Claim 1

Belden alleges infringement in this case under U.S. Patent No. 6,074,503, entitled "*Making Enhanced Data Cable With Cross-Twist Cabled Core Profile*" (the "'503 Patent-In-Suit") (Exh. 12 to Flores Decl.). As illustrated in Figure 4 below that corresponds to a certain preferred embodiment, the inventions of the '503 Patent-in-Suit generally relate to a method of making a data communications cable with a pair separator and more than one twisted pair of insulated conductors, wherein the twisted pairs of insulated conductors are aligned with the pair separator, and the twisting of the pair separator is controlled. ('503 Patent at 4:57-67).

According to the specification, "when plural elements are cabled together, an overall [back] twist is imparted to the assembly to improve geometric stability and help prevent separation". ('503 Patent at 4:57-67). As the inventor explained to the patent examiner during prosecution, the axial forces created by the required tensioning (*i.e.* back twist) during the cabling process impart residual stress within the cable core (*i.e.* pair separator). (Flores Decl. at Ex. 13 p. 4). The method taught by the '503 Patent-in-Suit solves the problem of back twist and eliminates stress on the core by using a die with a central opening that is shaped to correspond with the core. For example, as depicted in Figure 4, twisted pairs of insulated conductors will pass through openings (409) and a cross-shaped core will pass through a cross-shaped opening (407) in a second die (411), which aligns the transmission media with surface features of the core and prevents twisting motion of the core. ('503 Patent at 5:6-19). "The process allows the extruded core to maintain a physical spacing between the twisted pairs and maintains geometrical stability within the cable". (Id. at 4:62-64). Furthermore, the specification expressly teaches that, "[t]he inventive principles [of the '503 Patent-in-Suit] can be applied to cables including greater or fewer numbers of twisted pairs and different core profiles". (Id. at 3:37-39).

During the prosecution of the '503 Patent-in-Suit, the PTO Examiner considered and rejected prior art disclosing planetary cabling. (Flores Decl. at Ex. 13 p. 4).

As reproduced from the patent specification, Figure 4 depicts a die system for practicing a method for making a cable in accordance with an embodiment of the invention:

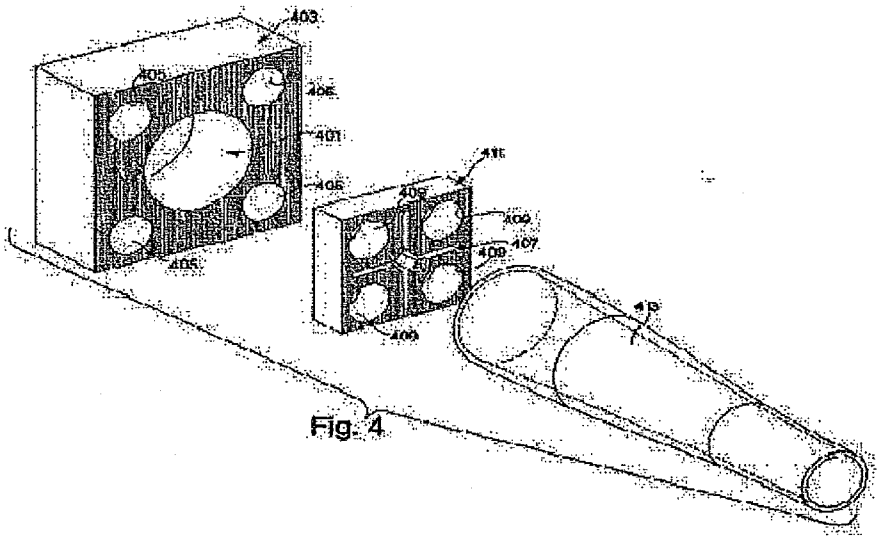

In the present case, Belden is asserting Claim 1 of the '503 Patent-In-Suit which recites the following:

> 1. A method of producing a cable, comprising steps of:
>
> **[1a]** passing a plurality of transmission media and a core through a first die which aligns the plurality of transmission media with surface features of the core and prevents twisting motion of the core;
>
> **[1b]** bunching the aligned plurality of transmission media and core using a second die which forces each of the plurality of transmission media into contact with the surface features of the core which maintain a spatial relationship between each of the plurality of transmission media;
>
> **[1c]** twisting the bunched plurality of transmission media and core close to the cable; and
>
> **[1d]** jacketing the closed cable.

2. <u>The Prior Art '485 Patent</u>

In his Expert Report served on September 22, 2009, Superior Essex's expert witness on invalidity, Baxter, opined that asserted Claim 1 of the '503 Patent-In-Suit is invalid within the

meaning of 35 U.S.C. §102 because it is allegedly anticipated by U.S. Patent No. 4,385,485 (the "'485 patent").

As depicted in Figures 4 and 9 reproduced below, the prior art '485 patent discloses optical fiber cable designs and manufacturing methods, which position the optical fibers in a "loosely-fitting fashion". See (Exh. 14 to Flores Decl.). "The loose-fitting fashion of the optical fibers overcomes increased transmission losses and changed transmission bandwidth caused by lateral and compression forces inherently applied to the optical fibers of conventional optical fiber cable construction." ('485 Patent at 2:26-30). Optical fiber (10) is protected from any appreciable lateral or compression forces by the folded splicing tape (11). (Id. at 3:21-24). The specification discloses a cylindrical core member (14) disposed in the center of the cable. (Id. at 4:29-30). During his deposition, Baxter concedes that the patent identifies no other core. (Flores Decl. Ex. 3, 107-108).

FIG. 4

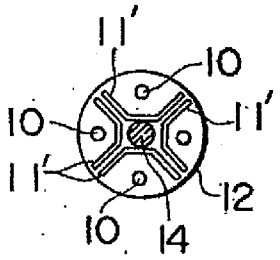

FIG. 9

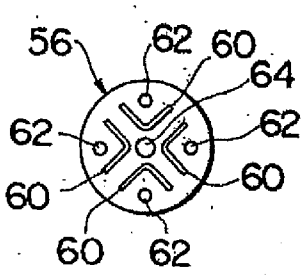

The "As shown in Figure 8, a plurality of bobbins (50) around which a corresponding plurality of optical fibers (10) are wound, and a plurality of rolls of splicing tape (54) for supplying unfolded splicing tapes (11), are mounted for rotation in a rotating cage (52)." ('485 Patent at 5:46-50). The '485 patent further discloses that "guide plate (56) was preferably integrally mounted for rotation with the rotary cage (52) so that both have the same rotational angular velocity." (Id. at 6:47-50). This patent discloses a planetary cabling method, which is

cumulative of prior art considered and rejected by the PTO Examiner. (Decl. Flores Ex. 17, at ¶ 47). [redacted]

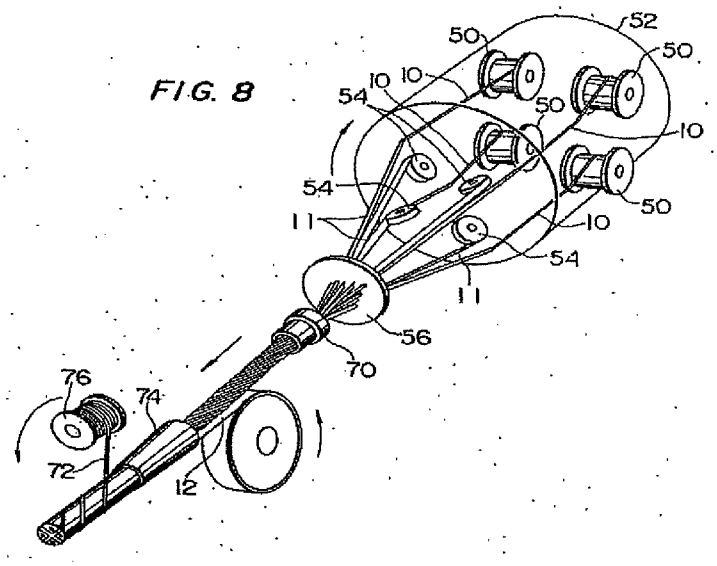

3. **The Prior Art '307 Patent**

In his Expert Report served on September 22, 2009, Superior Essex's expert witness on invalidity, Baxter, opined that asserted Claim 1 of the '503 Patent-In-Suit is invalid within the meaning of 35 U.S.C. §102 because it is allegedly anticipated by Japanese patent Sho56(1981)-7307 (the "'307 patent").

As shown in Figure 1 reproduced below, the prior art '307 patent discloses a method for producing a quad cable (*i.e.*, a cable with single conductors, not twisted conductor pairs), wherein the conductors are not pre-insulated. See (Exh. 15 to Flores Decl.). The reference teaches that a cruciform-shaped linear-shaped insulator (3) is introduced into branching board (9) through guide roller (8). (Id. at p. 2). "On branching board 9, a hole through which the above-stated linear-shaped insulator 3 passes is provided in the center, and a hole through which bare conductor or conductor clad with insulator 7 passes is provided in the area surrounding the

center." (Id.). The conductor (7) and linear-shaped insulator (3) are positioned by branching board (9) and assembled by stranding dies (10). (Id.).[redacted].

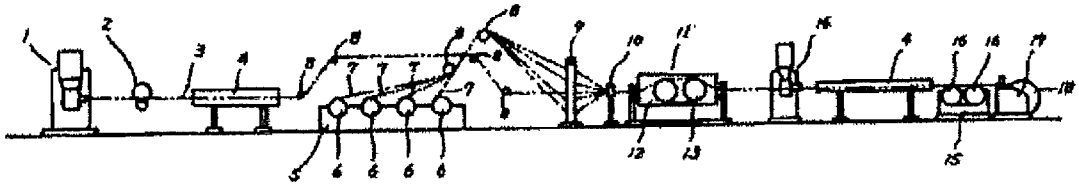

Figure 1

4. The Prior Art '910 Patent

In his Expert Report served on September 22, 2009, Superior Essex's expert witness on invalidity, Baxter, opined that asserted Claim 1 of the '503 Patent-In-Suit is invalid within the meaning of 35 U.S.C. §102 because it is allegedly anticipated by Japanese patent Sho57(1982)-19910 (the "'910 patent").

Similar to the '307 patent, the prior art '910 patent discloses a method of manufacturing a quad cable with uninsulated conductors. See (Exh. 16 to Flores Decl. ['910 Patent). As depicted in Figure 1, thread like object (1) and cable communication conductors (4a, b, c, d) are guided to a wire-splitting board (5). (Id. at p. 2). "[T]here is hole through which thread-like object 1 passes at the center of the wire-splitting board 5, and four holes are placed on the board at intervals of 90 degrees, through which the communication cable conductors pass." (Id. at p. 2). After passing through wire-splitting board (5), the thread-like object (1) and four communication cable conductors (4a, b, c, d) are "stranded into SZ with a left-right alternating stranding device 8".

(Id. at p. 2). [redacted]

Figure 1

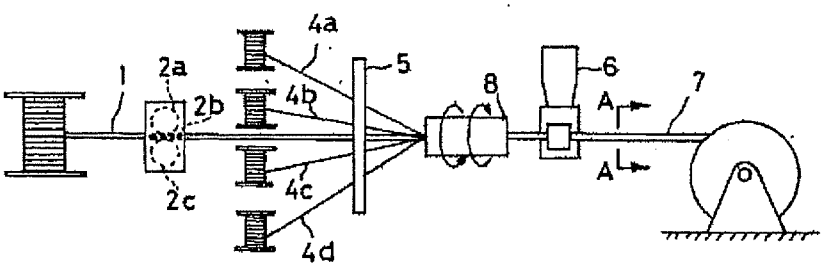

5. **The Prior Art '635 Patent**

In his Expert Report served on September 22, 2009, Superior Essex's expert witness on invalidity, Baxter, opined that asserted Claim 1 of the '503 Patent-In-Suit is invalid within the meaning of 35 U.S.C. §102 because it is allegedly anticipated by Japanese patent Hei8(1996)-96635 (the "'635 patent").

The prior art '635 patent discloses a manufacturing method for shield communications cables. See (Exh. 18 to Flores Decl.). According to Figure 7 and Figure 8 reproduced below, multiple sub-unit wires (1) and screen tape (2) are respectively fed out from a wire bobbin and tape reel (both not shown in figures) laid across a rotation cage (4), then pass through butt strap (5), and then continue to forming component (8). (Id. at p. 2). "When sub-unit wire group 1 and screen tape 2, have respectively passed through wire insertion holes 7 and tape insertion hole 6 and have been distributed to pre-determined spaces, they are guided to the following forming

component. In the forming component, sub-unit wire group 1 is stranded and assembled by forming and assembling component 8, while screen tape is formed into an S character shape and inserted into the center of the wire group." (Id.). The screen tape (2) enters and exits butt strap (5) flat, then enters assembling component (8) flat, but exits in an S-shape. (Id.).[redacted]

Figure 7

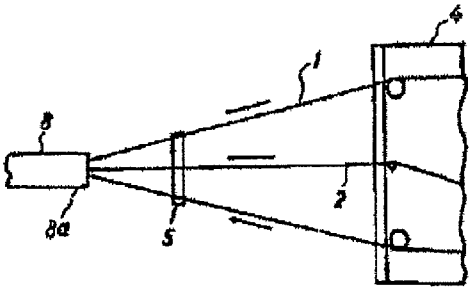

Figure 8

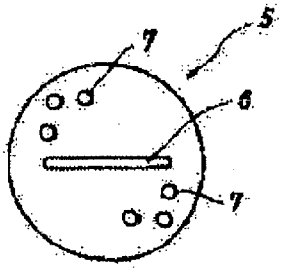

IV. ARGUMENT

A. Applicable Legal Standards

1. Standard Governing Summary Judgment

Pursuant to Fed. R. Civ. P. 56(c), summary judgment shall be granted where the evidentiary record "show[s] that there is no genuine issue as to any material fact and that the movant is entitled to a judgment as a matter of law." As the U.S. Supreme Court has held, this standard "mandates the entry of summary judgment … against a party who fails to make a showing sufficient to establish the existence of an element essential to that party's case, and on which the party will bear the burden of proof at trial." Celotex Corp. v. Catrett, 477 U.S. 317,

322-23 (1986). In such a situation "there can be 'no genuine issue as to any material fact,' since a complete failure of proof concerning an essential element to the nonmoving party's case necessarily renders all other facts immaterial." Id. at 323. These principles apply with full force to patent infringement cases. See, e.g., Rotec Indus., Inc. v. Mitsubishi Corp., 215 F.3d 1246, 1250-51 (Fed. Cir. 2000).

When a moving party demonstrates the absence of evidence sufficient to support an essential element of the nonmoving party's case, the nonmoving party can avoid summary judgment only by pointing to specific facts in the record from which "a reasonable jury could return a verdict for the nonmoving party" with regard to the element at issue. Anderson v. Liberty Lobby, Inc., 477 U.S. 242, 248-49 (1986). Accord Matsushita Elec. Indus. Co. v. Zenith Radio Corp., 475 U.S. 574, 586-87 (1986) (nonmoving party must identify evidence that could "lead a rational trier of fact to find for the nonmoving party"); PowerOasis, Inc. v. T-Mobile USA, Inc., 522 F.3d 1299, 1303 (Fed. Cir. 2008) (same).

2. Standard Governing Invalidity By Anticipation

Issued patent claims are presumptively valid as a matter of law based upon having been granted by the U.S. Patent & Trademark Office (the "PTO"). Magnivision, Inc. v. Bonneau Co., 115 F.3d 956, 958 (Fed. Cir. 1997). A patent challenger can potentially overcome this presumption, however, by establishing through clear and convincing evidence that the claims at issue are invalid as "anticipated" for failing to meet the novelty requirement of 35 U.S.C. §102. See Invitrogen Corp. v. Biocrest Mfg., L.P., 424 F.3d 1374, 1378 (Fed. Cir. 2005). This type of anticipation inquiry involves two steps. First, the court must construe the claims of the patent-in-suit as a matter of law. Key Pharms. v. Hercon Labs. Corp., 161 F.3d 709, 714 (Fed. Cir. 1998). Second, the finder of fact must compare the construed claims against the prior art. Id.

Proving patent claims invalid for anticipation "requires that the four corners of a single prior art document describe every element of the claimed invention, either expressly or inherently, such that a person of ordinary skill in the art could practice the invention without undue experimentation." Advanced Display Sys. Inc. v. Kent State Univ., 212 F.3d 1272, 1282 (Fed. Cir. 2000) (citations omitted). Indeed, the Federal Circuit has held that "[t]here must be no difference between the claimed invention and the reference disclosure, as viewed by a person of ordinary skill in the field of the invention." Scripps Clinic & Research Found. v. Genentech, Inc., 927 F.2d 1565, 1576 (Fed. Cir. 1991). Moreover, "disclosure of each element is not quite enough – this court has long held that '[a]nticipation [further] requires the presence in a single prior art disclosure of all elements of a claimed invention *arranged as in the claim*.'" Finsar Corp. v. DirecTV Group, Inc., 523 F.3d 1323, 1334-35 (Fed. Cir. 2008) (*quoting* Connell v. Sears Roebucks & Co., 722 F.2d 1542, 1548 (Fed. Cir. 1983)).

Given the requirement that each and every claim limitation be found in a single prior art reference, disclosures made elsewhere in the prior art are only of limited relevance to an anticipation inquiry:

> [A]nticipation requires that each limitation of a claim must be found in a single reference. Although [the Federal Circuit has] permitted the use of additional references to confirm the contents of the allegedly anticipating reference, … we have made clear that anticipation does not permit an additional reference to supply a missing claim limitation.

Teleflex, Inc. v. Ficosa North America Corp., 299 F.3d 1313, 1335 (Fed. Cir. 2002). Thus, additional references may be used only to shed light on what a prior art reference would have meant to those skilled in the art at that time and *not* for a specific teaching, since this would be indicative of an attempt to improperly "combine the teachings of the references to build an

CommScope v. Belden
IPR2023-01061, -01062
CommScope Ex. 1061

anticipation." Studiengesellschaft Kohle, m.b.H. v. Dart Industries, Inc., 726 F.2d 724, 727 (Fed. Cir. 1984).

A single prior art reference *expressly* contains each and every claim limitation when those limitations are explicitly disclosed in the reference. "In determining whether a patented invention is [expressly] anticipated, the claims are read in the context of the patent specification in which they arise and in which the invention is described." Glaverbel Societe Anonyme v. Northlake Mktg. & Supply, Inc., 45 F.3d 1550, 1554 (Fed. Cir. 1995). The prosecution history and the prior art may also be consulted "[i]f needed to import clarity or avoid ambiguity" in ascertaining whether the invention is novel or was previously known in the art. Id. (internal citations omitted).

A prior art reference may also anticipate without explicitly disclosing a feature if that missing characteristic is *inherently* present in the single anticipating reference. See Continental Can Co. USA v. Monsanto Co., 948 F.2d 1264, 1268 (Fed. Cir. 1991). The Federal Circuit has explained that an inherent limitation is one that is necessarily present and not one that may be established only by probabilities or possibilities. Id. at 1268-69. Indeed, "'[t]he mere fact that a certain thing may result from a a given set of circumstances is not sufficient.'" Id. at 1269 (citations omitted). Accord Trintec Industries, Inc. v. Top-U.S.A. Corp., 295 F.3d 1292, 1297 (Fed. Cir. 2002) ("Inherent anticipation requires that the missing descriptive material is 'necessarily present,' not merely probably or possibly present, in the prior art.") (citations omitted).

Even where a single prior art reference discloses each and every claim limitation, a "claimed invention cannot be anticipated by a prior reference if the allegedly anticipatory disclosures cited as prior art are not enabled." Amgen Inc. v. Hoechst Marion Roussel, Inc., 314

F. 3d 1313, 1354 (Fed. Cit. 2003). Accord Elan Pharmaceuticals v. Mayo Foundation For Medical Education And Research, 346 F.3d 1051, 1054 (Fed. Cir. 2003) ("To serve as an anticipating reference, the reference must enable that which it is asserted to anticipate.") In turn, enablement is satisfied only where the prior art disclosures are sufficient to teach a person of ordinary skill how to make and practice the invention without "undue experimentation." Novo Nordisk Pharmaceuticals, Inc. v. Bio-Technology General Corp., 424 F.3d 1347, 1355 (Fed. Cir. 2005).

Finally, the "presumption of validity under 35 U.S.C. §282 carries with it a presumption that the [PTO] Examiner did this duty and knew what claims he was allowing." Intervet Am., Inc. v. KeeVet Labs., Inc., 887 F.2d 1050, 1054 (Fed. Cir. 1989). A patent challenger therefore faces a heightened burden of proof that goes beyond clear and convincing evidence when its anticipation arguments are premised upon prior art references that were known to the PTO at the time the patent claims were granted. Al-Site Gorp. v. USI International Inc., 174 F.3d 1308, 1323 (Fed. Cir. 1999) (patent challenger's "'burden is especially difficult when the prior art was before the PTO examiner during prosecution of the application.'" (*quoting* Hewlett-Packard Co. v. Bausch & Lomb Inc., 909 F.2d 1464, 1467 (Fed. Cir. 1990)). Moreover, this heightened burden of proof applies equally to situations where a patent challenger relies upon prior art references that may not have been specifically known to the PTO, but that are merely cumulative of other art that was before the Examiner. See Metabolite Labs., Inc. v. LabCorp. Of Am. Holdings, 370 F.3d 1354, 1368 (Fed. Cir .2004).

3. Standards Governing Summary Judgment Of No Anticipation

Applying the standards for summary judgment and invalidity by anticipation set forth above, a patent holder is entitled to a summary judgment of no anticipation as a matter of law where a patent challenger is unable to identify specific facts in the record from which a

reasonable jury could conclude that a single prior art reference contains, either expressly or inherently, each and every limitation of an asserted patent claim. See, e.g., IGT v. Bally Gaming International Inc., 610 F. Supp. 2d 288, 325, 327 (D. Del. 2009) (Robinson, J.) (granting summary judgment of no anticipation); Telecordia Technologies, Inc. v. Lucent Technologies, Inc., 514 F. Supp. 2d 598, 613 (D. Del. 2007) (same); Pharmacia & Upjohn Co. v. Sicor Inc., 447 F. Supp. 2d 363, 377 (D. Del. 2006) (same).

B. Belden Is Entitled To A Summary Judgment That Claim 27 Of The '095 Patent-In-Suit Is Not Anticipated By The Prior Art '866 Or '645 Patents

As demonstrated below, the Court should grant a summary judgment that Claim 27 of the '095 Patent-In-Suit is not anticipated because Superior Essex cannot identify any evidence from which a reasonable jury could conclude that either of the prior art '866 or '645 patents disclose each and every element of the invention recited in Claim 27. With regard to the prior art '866 patent, Belden's entitlement to summary judgment is dependent upon the Court adopting one or more of Belden's proposed claim constructions or constructions similar thereto.[3] As to the prior art '645 patent, however, Belden offers at least one grounds for summary judgment that exists independent of whether the Court adopts any of Belden's proposed claim constructions.

1. There Is No Genuine Dispute That The Prior Art '866 Patent Fails To Disclose Each And Every Element Of Claim 27

Under Belden's proposed claim constructions, no reasonable jury could conclude from the undisputed record that the prior art '866 patent discloses either the "dielectric pair separator" required by claim elements 27(c), (d), and (e) of the '095 Patent-In-Suit, or the further requirement contained in claim element 27(c) that this separator be "substantially flat." See,

[3] Belden has filed today with the Court under separate cover its Opening Claim Construction Brief which provides all of the bases for why Belden's proposed claim constructions should be adopted.

supra, pp. 3-4; (Exh. 1 to Flores Decl.) Accordingly, as a matter of law, the '866 patent cannot render Claim 27 invalid for anticipation. See, e.g., Advanced Display Sys., 212 F.3d at 1282; Scripps Clinic; 927 F.2d at 1576; Finsar, 523 F.3d at 1334-35.

First, Belden's proposed claim construction for the "dielectric tape separator" recited in claim elements 27(c), (d), and (e) is that it must be a "non-conductive separator." See (D.I. 102, p. 6). Here, no reasonable jury could conclude that this claim limitation is met because each of the pair separator shields disclosed in the '866 patent is electrically conductive, including the embodiment in which an aluminum foil separator is laminated by plastic. See, supra, pp. 4-6.

[redacted] Accordingly, here Superior Essex would need to prove *beyond* clear and convincing evidence that the '866 shields could somehow qualify as the claimed "dielectric tape separator." See Metabolite Labs., 370 F.3d at 1368 (heightened burden of proof for cumulative art).

Second, Belden's proposed claim construction for the term "substantially flat" as applied to the dielectric pair separator of claim element 27(c) is the following: "a thin member that is substantially uniform in thickness and having an overall profile that is substantially straight." See (D.I. 102, p. 7). No reasonable jury could conclude that this claim limitation is satisfied by any of the pair separator shields disclosed in the '866 patent because none of those separators have an "overall profile that is substantially straight" when viewed in radial cross-section in the finished cable. See, supra, pp. 5-6. To the contrary, as the specification and the diagrams from

the '866 patent make clear, its separators have been configured into a variety of non-linear geometric shapes such as the number "6," a figure "8," or a circle. (Id.). Indeed, were any of these separators to be removed from the data cable and placed on a table top, they would not lay "substantially flat" as claim element 27(c) requires, but rather they would rise up from the table top in the shapes into which they have been configured.[4]

2. There Is No Genuine Dispute That The Prior Art '645 Patent Fails To Disclose Each And Every Element Of Claim 27

Under Belden's proposed constructions, no reasonable jury could conclude from the undisputed record that the prior art '645 patent discloses the "substantially flat" dielectric pair separator required by claim element 27(c). See, supra, pp. 3-4; (Exh. 1 to Flores Decl.). Nor could a reasonable jury conclude that the '645 patent satisfies the limitation contained in claim element 27(e) that the twisted pairs of insulated conductors be "twisted about a common central axis to form a twisted pair cable" as that phrase would be understood by a person of ordinary skill in the art. (Id.). Accordingly, as a matter of law, the '645 patent cannot render Claim 27 invalid for anticipation. See, e.g., Advanced Display Sys., 212 F.3d at 1282; Scripps Clinic, 927 F.2d at 1576; Finsar, 523 F.3d at 1334-35.

As noted above, Belden's proposed claim construction for the term "substantially flat" as applied to the dielectric tape separator recited in claim element 27(c) is the following: "a thin member that is substantially uniform in thickness and having an overall profile that is substantially straight." See (D.I. 102, p. 7). In the present case, no reasonable jury could conclude that this limitation is met because it is undisputed that the tape separator disclosed in

[4] As Belden has elsewhere demonstrated, the '095 inventors expressly argued in the prosecution history that separators with these types of winding "sinusoidal" shaped configurations do *not* qualify as "substantially flat" separators within the meaning of the claim language. See Joint Appendix To Claim Construction Briefing at Exh. 10B, p. JA-792.

the '645 patent does not have an "overall profile that is substantially straight" when viewed in radial cross-section in the finished cable. See, supra, pp. 6-7. [redacted] (Id.). This is fully consistent with the specification of the '645 patent which states that the tape sheet is "wound into a coil-like shape." (Id.). Were such a tape sheet separator to be removed from the data cable and placed on a table top, it would not lay "substantially flat" as claim element 27(c) requires, but rather is would rise up from the table top in the shape of a jelly roll coil. As noted above, the '095 inventors expressly argued in the prosecution history that separators with this type of shape would not qualify as "substantially flat." See, supra, p. 27 n. 5.

In addition, claim element 27(e) contains a further requirement that the twisted pairs of insulated conductors be collectively "twisted about a common central axis to form a twisted pair cable." Neither party has asked the Court to construe the meaning of this particular limitation which should be given its "ordinary and customary meaning…to a person of ordinary skill in the art at the time of the invention." Phillips v. AWH Corp., 415 F.3d 1303, 1313 (Fed. Cir. 2005). Here, using the ordinary and customary meaning supplied by Superior Essex's own expert witness on invalidity, no reasonable jury could conclude that the '645 patent discloses this requirement. See, supra, pp. 7-8 [redacted] The first situation is where individual conductor wires are twisted together to form a twisted pair (Id.). By contrast, claim element 27(e) is directed toward a second situation that involves multiple twisted pairs being themselves twisted together to form the finished cable (Id.). [redacted]

[redacted]

[redacted]

C. **Belden Is Entitled To A Summary Judgment That Claim 2 Of The '999 Patent-In-Suit Is Not Anticipated By The Prior Art '866 Patent**

The Court should grant summary judgment that dependent Claim 2 of the '999 Patent-In-Suit is not anticipated because Superior Essex cannot identify any evidence from which a reasonable jury could conclude that the prior art '866 patent discloses each and every element of the invention recited in dependent Claim 2. See, e.g., Advanced Display Sys., 212 F.3d at 1282; Scripps Clinic, 927 F.2d at 1576; Finsar, 523 F.3d at 1334-35. In particular, Superior Essex can point to no evidence of record that the '866 patent discloses an "unshielded" communications cable as required by claim element 1(b), nor evidence that satisfies the further requirement of claim element 1(e)[5] that the recited tape separator be "substantially non-conductive." See, supra, p. 9; (Exh. 7 to Flores Decl.). Belden's entitlement to summary judgment on Claim 2 is *not* premised upon the Court needing to adopt any of Belden's proposed claim constructions. Indeed, neither party has asked the Court to construe these particular limitations which should simply be given their "ordinary and customary meaning...to a person of ordinary skill in the art at the time of the invention." Phillips, 415 F.3d at 1313.

In the present case, no reasonable jury could conclude that the '866 patent satisfies the "unshielded" communications cable requirement recited in claim element 1(b). To the contrary, every embodiment disclosed in the '866 patent contains pair separator shields "consisting of electrically conducting material" that serve to "subdivide[e] the cable cross section into at least two shielding sectors, ...[with] a conductor pair running in each shielded sector, so that the two

[5] Because Claim 2 of the '999 Patent-In-Suit depends from Claim 1, these elements from Claim 1 are incorporated into Claim 2.

conductor pairs are shielded against each other and externally." See, supra, pp. 4-5. While the addition of a further overall shield to the '866 cable may well be optional, the pair separator shields themselves are always required to be present in every embodiment and thus would preclude any rational trier of fact from finding that the '866 patent discloses an "unshielded" communications cable.

Nor could a reasonable jury conclude that these '866 pair separator shields "consisting of electrically conducting materials" somehow satisfy the "substantially non-conductive" requirement recited in claim element 1(e). The embodying shields in the '866 patent are all made of conductive "metal foils, especially aluminum foils or aluminum foils laminated by plastic." See, supra, pp. 4-6, [redacted] Thus, as any rational trier of fact would recognize, the pair separators disclosed in the '866 patent cannot be "substantially non-conductive" or they would be unfit to serve their intended purpose of acting as shields.[6]

D. Belden Is Entitled To A Summary Judgment That Claim 19 Of The '537 Patent-In-Suit Is Not Anticipated By The Prior Art '629 Patent

The Court should grant a summary judgment that Claim 19 of the '537 Patent-In-Suit is not anticipated because Superior Essex cannot identify any evidence from which a reasonable jury could conclude that the prior art '629 patent discloses each and every element of the invention recited in Claim 19. See, e.g., Advanced Display Sys., 212 F.3d at 1282; Scripps Clinic, 927 F.2d at 1576; Finsar, 523 F.3d at 1334-35. In particular, Superior Essex can point to

[6] Notably, in the prosecution history the '999 inventors expressly argued that exactly these types of metal foils laminated by plastic do not qualify as "substantially-nonconductive" within the meaning of the claim language. See Joint Appendix To Claim Construction Briefing at Exh. 12B, p. JA-984.

no evidence of record that the '629 patent discloses an "unshielded" communications cable as required by the preamble, a "substantially flat" dielectric separator as recited in claim elements 19(b) and (d), nor a dielectric separator that "includes a foamed polymer" as further recited in claim element 19(d). See, supra, p. 10; (Exh. 8 to Flores Decl.). With regard to the "substantially flat" claim limitation, Belden's entitlement to summary judgment is dependent upon the Court adopting Belden's proposed claim construction or a construction similar thereto. As to the other two claim limitations, however, neither party has asked the Court to construe them and they should simply be given their "ordinary and customary meaning…to a person of ordinary skill in the art at the time of the invention." Phillips, 415 F.3d at 1313.

First, no reasonable jury could conclude that the particular embodiment from the '629 patent that Superior Essex relies upon to argue anticipation satisfies the "unshielded" limitation contained in the claim preamble.[7] Indeed, Superior Essex looks to an alternative embodiment to what is shown in Figure 7 of the '629 patent where the only difference would be to replace the preform separator (58) of Figure 7 with a tape separator. See, supra, pp. 10-11. In turn, Figure 7 purports to show only a portion of the cable (20) that is more fully depicted in Figure 5. (Id.). As a review of the fuller depiction in Figure 5 confirms, this cable (20) does in fact include a shield (60). (Id.).[redacted]

[7] As a matter of law, language in a preamble establishes a claim limitation where, as here, the inventor "chos[e] to use both the preamble and the body [of the claim] to define that subject matter of claimed invention." Bell Communications Research, Inc. v. Vitalink Communications Corp., 55 F.3d 615, 620 (Fed. Cir. 1995).

Second, Belden's proposed claim construction for the term "substantially flat" as applied to the dielectric pair separator recited in claim elements 19(b) and (d) is the following: "a thin member that is substantially uniform in thickness and having an overall profile that is substantially straight." See (D.I. 102, p. 7). In the present case, no reasonable jury could conclude that this limitation is met because it is undisputed that any tape separator that replaced the preform (58) shown in Figure 7 of the '629 would *not* have an "overall profile that is substantially straight" when viewed in radial cross-section. See, supra, pp. 10-11. To the contrary, the tape separator would necessarily have the same non-linear "S-shaped" profile as the preform for which it was substituted. (Id.). [redacted] Were such a tape separator to be removed from the data cable and placed on a table top, it would not lay "substantially flat" as claim elements 19(b) and (d) require, but rather it would rise up from the table top in the shape of an "S." As noted above, the '537 inventors expressly argued in the prosecution history that separators with this type of shape would not qualify as "substantially flat." See, supra, p. 27 n.5.

Finally, no reasonable jury could conclude that the tape separator embodiment recited in the '629 patent expressly discloses the use of a tape that "includes a foamed polymer" as required by claim element 19(d). Indeed, the '629 patent says nothing more specific than that the tape separator "is made of a dielectric material" of which there are multitudes of different kinds. See, supra, pp. 10-11. Notably, Superior Essex cannot be heard to argue that the '629 patent somehow *inherently* discloses this limitation given that a "foamed polymer" might qualify as one potential type of "dielectric material." To satisfy the legal requirements for the doctrine of anticipation by inherency, the claimed foamed polymer would have to be "necessarily present" in

the tape embodiment of the '629 patent, and it is not enough that it is "merely probably or possibly present." Trintec Industries, 295 F.3d at 1297.

E. Belden Is Entitled To A Summary Judgment That Claims 4 And 7 Of The '116 Patent-In-Suit Are Not Anticipated By The Prior Art '064 Patent

The Court should grant a summary judgment that Claims 4 and 7 of the '116 Patent-In-Suit are not anticipated because Superior Essex cannot identify any evidence from which a reasonable jury could conclude that the prior art '064 patent discloses each and every limitation recited in Claims 4 or 7. See, e.g., Advanced Display Sys., 212 F.3d at 1282; Scripps Clinic, 927 F.2d at 1576; Finsar, 523 F.3d at 1334-35. In particular, Superior Essex can point to no evidence of record that the '064 patent discloses the "data cable" recited in the respective preambles of Claims 4 and 7, nor the further limitation of claim element 4(d) requiring a "cable covering contacting each projection." See, supra, pp. 12-13; (Exh. 10 to Flores Decl.). For each of these limitations, Belden's entitlement to summary judgment is dependent upon the Court adopting Belden's proposed claim constructions or other constructions similar thereto.

Belden's proposed claim construction for the "data cable" recited in the preambles to Claims 4 and 7 is that it must be a "high speed data communications cable." See (D.I. 102, p. 5). No reasonable jury could conclude that the 1960s era electric cable disclosed in the '064 patent could qualify as a "high speed" data cable within the meaning of the '116 Patent-In-Suit[redacted]s [redacted]e [redacted]a [redacted]y [redacted], [redacted]y [redacted].

Nor could a reasonable jury conclude that the '064 patent discloses the further limitation of claim element 4(d) requiring a "cable covering contacting each projection." Of relevance here, Belden's proposed claim construction for "cable covering" is the following: "means to insulate and protect the cable consisting of only an outer jacket, or an outer jacket in combination with a shield, drain spiral, and/or a binder." See (D.I. 102, p. 5). As shown in Figure 3 of the '064 patent set forth above, the only structures that the tips of the fins (22) potentially make contact with would *not* be part of the "cable covering" so defined -- *i.e.*, the fins potentially contact only the lapping layer (25), which is surrounded by the layer of dielectric material (26) that has a poor power factor, which are not part of the "cable covering." See, supra, p. 14.

F. Belden Is Entitled To A Summary Judgment That Claim 1 Of The '503 Patent-In-Suit Is Not Anticipated By The Prior Art '485, '307, '910, Or '635 Patents

As set forth below, the Court should grant summary judgment that Claim 1 of the '503 Patent-in-Suit is not anticipated because Superior Essex cannot identify any evidence from which a reasonable jury could conclude that the prior art '485, '307, '910, or '635 patents disclose each and every element of the invention recited in Claim 1. Belden's entitlement to summary judgment exists independently of whether the Court adopts any of Belden's proposed claim constructions.

1. There Is No Genuine Dispute That The Prior Art '485 Patent Fails To Disclose Each And Every Element Of Claim 1

Under either Parties' proposed claim constructions, no reasonable jury could conclude from the undisputed record that the prior art '485 patent discloses a "core" with "surface features" as required by elements 1(a) and (b), or that this reference discloses a first die that "prevents twisting motion of the core" as required by elements 1(a). See supra, pp. 16-18. Thus, as a matter of law, the '866 patent cannot render Claim 1 invalid for anticipation. See, e.g.,

Advanced Display Sys., 212 F.3d at 1282; Scripps Clinic, 927 F.2d at 1576; Finsar, 523 F.3d at 1334-35.

Superior Essex can point to no evidence in the record to show that this reference discloses a core with surface features. To the contrary, Superior Essex's expert, admitted in his recent deposition that the '485 discloses a cylindrical element (14) in the center of the cable as a "core member". See supra, p. 17. No reasonable jury could conclude that this disclosure satisfies the claim element "surface features"[8] under either Belden's or Superior Essex's proposed claim constructions, because a circle has no distinguishable regions or recesses on its surface. See supra, pp. 16-17.

Notwithstanding Baxter's admission that the core is a cylindrical element, he attempts to argue that the V-shaped splicing tape (11) is a core. However, his argument fails for two reasons. First, splicing tape (11) isolates one fiber optic (*i.e.* transmission media), however, a single tape (11) does not separate a plurality of transmission media as required by either Parties' proposed construction for the claim term "core".[9] See supra, p. 17. Second, even assuming, *arguendo,* that splicing tape (11) is a core, no reasonable jury could conclude that the '485 patent discloses a second die that "forces each of the plurality of transmission media into contact with the surface features of the core" as required by claim element 1(b). (Id.). To the contrary, the

[8] Belden's proposed claim construction is "distinguishable regions of the core's surface with which transmission media can be aligned and maintained during the manufacture of the cable". Superior Essex's proposed claim construction is "recesses on the surface of the core that form channels for containing the transmission media".

[9] Belden's proposed claim construction is "a longitudinally-extending element that separates transmission media". Superior Essex's proposed claim construction is "a longitudinally-extending element that separates transmission media".

'485 Patent expressly teaches avoiding any lateral or compression forces by positioning the optical fibers in the splicing tapes in "loosely-fitting fashion". (Id.)

In addition, the manufacturing method disclosed in the '485 does not "prevent[] twisting motion of the core" as required by claim element 1(a). No reasonable jury could conclude that the '485 patent discloses this requirement because the entire guide plaint (56) and the core, twists with the rotary cage about the cable's longitudinal axis. See, supra, pp. 17-18. [redacted] Furthermore, this reference discloses a planetary cabling method that is cumulative of other art that was considered and rejected by the PTO Examiner. (Id.). Accordingly, Superior Essex would need to prove *beyond* clear and convincing evidence that the '485 discloses "prevents twisting motion of core." See Metabolite Labs., 370 F.3d at 1368 (heightened burden of proof for cumulative art).

2. There Is No Genuine Dispute That The Prior Art '307 Patent Fails To Disclose Each And Every Element Of Claim 1

No reasonable jury could conclude from the undisputed record that the prior art '307 patent discloses a first die that "prevents twisting motion of the core" as required by element 1(a). See supra, pp. 18-19. Thus, as a matter of law, the '866 patent cannot render Claim 1 invalid for anticipation. See, e.g., Advanced Display Sys., 212 F.3d at 1282; Scripps Clinic, 927 F.2d at 1576; Finsar, 523 F.3d at 1334-35.

Superior Essex can point to no evidence in the record to show that this reference discloses a die that prevents twisting of the core. [redacted] As a result, Superior Essex attempts to argue that branching board (9) would of necessity prevent twisting. This argument, however, is contrary to the evidence in the record. First, there is no disclosure, drawing, or suggestion in the '307 patent that branching board (9) contains a hole that

is shaped to match the configuration of the core. (Id.). Therefore, there is no evidence that branching board (9) can actually prevent twisting of the core as required by Claim 1. (Id.). Second, as Superior Essex's expert admits, there are multiple points in the disclosed manufacturing line where back twist can be controlled and branching board (9) is merely one of the possibilities. (Id.). Thus, as a matter of law, the '307 patent does not inherently disclose all the claim elements of Claim 1 because it does not necessarily include a die that prevents twisting of the core. See Trintec Industries, Inc., 295 F.3d 1292, ("Inherent anticipation requires that the missing descriptive material is 'necessarily present,' not merely probably or possibly present, in the prior art.") (citations omitted).

3. There Is No Genuine Dispute That The Prior Art '910 Patent Fails To Disclose Each And Every Element Of Claim 1

No reasonable jury could conclude from the undisputed record that the prior art '910 patent discloses a first die that "prevents twisting motion of the core" as required by element 1(a). See supra, pp. 19-20. Thus, as a matter of law, the '910 patent cannot render Claim 1 invalid for anticipation. See, e.g., Advanced Display Sys., 212 F.3d at 1282; Scripps Clinic, 927 F.2d at 1576; Finsar, 523 F.3d at 1334-35.

Superior Essex can point to no evidence in the record to show that this reference discloses a die that prevents twisting of the core. In fact, in both his recent deposition and his expert report, Baxter unequivocally concedes that the "'910 patent does not discuss a means for preventing the core from rotating." See supra, p. 19. Similar to the '307 patent, Superior Essex tries to argue that splitting board (5) would of necessity prevent twisting. However, this argument is not supported by the evidence in the record. First, there is no disclosure, drawing, or suggestion in the '910 Patent that splitting board (5) contains a hole that is shaped to match the configuration of the core as required by Claim 1. (Id.). Therefore, there is no evidence that

splitting board (5) can actually prevent twisting of the core. (Id.). Second, there may be other points in the disclosed manufacturing line where back twist can be controlled and splitting board (5) is merely one of the possibilities. See supra, pp. 19-20. Thus, as a matter of law, the '307 patent does not inherently disclose all the claim elements of Claim 1 because it does not necessarily include a die that prevents twisting of the core. See Trintec Industries, Inc., 295 F.3d 1292, ("Inherent anticipation requires that the missing descriptive material is 'necessarily present,' not merely probably or possibly present, in the prior art.") (citations omitted).

4. There Is No Genuine Dispute That The Prior Art '635 Patent Fails To Disclose Each And Every Element Of Claim 1

Under either Parties' proposed claim constructions, no reasonable jury could conclude from the undisputed record that the prior art '635 patent discloses a "first dies which aligns the plurality of transmission media with surface features of the core" and a "second die which forces each of the plurality of transmission media into contact with the surface features of the core" as required by elements 1(a) and (b), or that the reference discloses a first die that "prevents twisting motion of the core" as required by elements 1(a). See supra, pp. 20-21. Thus, as a matter of law, the '635 patent cannot render Claim 1 invalid for anticipation. See, e.g., Advanced Display Sys., 212 F.3d at 1282; Scripps Clinic, 927 F.2d at 1576; Finsar, 523 F.3d at 1334-35.

Claim element 1(a) aligns the plurality of transmission media "with surface features of the core". Claim element 1(b) forces the plurality of transmission media into contact "with **the** surface features of the core". As a matter of patent drafting convention, use of the indefinite article "the" to modify "surface features" in claim element 1(b) means that these must be the same "surface features" previously identified in claim element 1(a). See, e.g., Robert C. Faber, Landis On Mechanics Of Patent Claim Drafting, §16, p. III-6 (4th ed. 2001)("subsequent

mention of the previous identified element must be preceded by the definite article 'the' or 'said'.). No reasonable jury could conclude that the flat surface features of the tape as it passes through die 1 are the same grooved surface features as the S-shaped tape in die 2. See supra, pp. 20-21. In fact, the '635 patent makes clear that the two grooves of the S-shaped tape are not created until after the tape passes through die 1. (Id.).

In addition, the manufacturing method disclosed in the '485 does not "prevent[] twisting motion of the core" as required by claim element 1(a). No reasonable jury could conclude that the '635 patent discloses this requirement because assembling component (8) and butt strap (5), including the core, twist with the rotary cage (4) along the cable's longitudinal axis. See, supra, pp. 21. [redacted] Thus, the '635 patent does not teach this claim element. Furthermore, this reference discloses a planetary cabling method that is cumulative of other art that was considered and rejected by the PTO Examiner. (Id.). Accordingly, Superior Essex would need to prove *beyond* clear and convincing evidence that the '485 discloses "prevents twisting motion of core." See Metabolite Labs., 370 F.3d at 1368 (heightened burden of proof for cumulative art).

V. CONCLUSION

For the foregoing reasons, Belden respectfully requests that the Court grant the present motion in its entirety by awarding a summary judgment that: **(i)**Claim 27 of the '095 Patent-In-Suit is not anticipated under 35 U.S.C. §102 by the prior art '866 or '645 patents; **(ii)**Claim 2 of the '999 Patent-In-Suit is not anticipated under 35 U.S.C. §102 by the prior art '866 patent; **(iii)** Claim 19 of the '537 Patent-In-Suit is not anticipated under 35 U.S.C. §102 by the prior art '629 patent; **(iv)** Claims 4 and 7 of the '116 Patent-In-Suit are not anticipated under 35 U.S.C. §102 by the prior art '064 patent; and **(v)** Claim 1 of the '503 Patent-In-Suit is not anticipated under 35 U.S.C. §102 by the prior art '485, '307, '910, or '635 patents.

Respectfully submitted,

YOUNG CONAWAY STARGATT & TAYLOR, LLP

John W. Shaw (#3362)
Karen E. Keller (#4489)
Pilar G. Kraman (#5199)
The Brandywine Building, 17th Floor
1000 West Street
Wilmington, DE 19801
Telephone (302) 571-6600
pkraman@ycst.com

Attorneys for Belden Technologies, Inc. and Belden CDT (Canada) Inc.

OF COUNSEL:

Matthew B. Lowrie
Marc N. Henschke
Michelle A. Flores
FOLEY & LARDNER LLP
111 Huntington Avenue
Boston, MA 02199
Telephone: (617) 342-4000
mlowrie@foley.com
mhenschke@foley.com
mflores@foley.com

Dated: December 4, 2009

CERTIFICATE OF SERVICE

I, Pilar G. Kraman, hereby certify that on December 4, 2009, a copy of the foregoing document was served on the following counsel in the manner indicated below:

BY EMAIL

Jeffrey L. Moyer, Esquire
Anne Gaza, Esquire
Richards, Layton, & Finger
One Rodney Square
920 North King Street
Wilmington, Delaware 19801

Russell Blythe, Esquire
Holmes J. Hawkins , III., Esquire
James J. Mayberry, Esquire
King & Spalding LLP
1180 Peachtree Street, N.E.
Atlanta, GA 30309-3521

YOUNG CONAWAY STARGATT
& TAYLOR, LLP

/s/ Pilar G. Kraman
John W. Shaw (No. 3362)
Karen E. Keller (No. 4489)
Pilar G. Kraman (No. 5199)
The Brandywine Building
1000 West Street, 17th Floor
Wilmington, Delaware 19899
pkraman@ycst.com
(302) 571-6600

Attorneys for Plaintiffs

CERTIFICATE OF SERVICE

I, Pilar G. Kraman, hereby certify that on December 11, 2009, the foregoing document was electronically filed with the Clerk of the Court using CM/ECF, which will send notification that such filing is available for viewing and downloading to the following counsel of record:

Jeffrey L. Moyer, Esquire
Anne Gaza, Esquire
Richards, Layton, & Finger
One Rodney Square
920 North King Street
Wilmington, Delaware 19801
moyer@rlf.com
gaza@rlf.com

I further certify that I caused a copy of the foregoing document to be served by e-mail on the above-listed counsel of record and on the following non-registered participants in the manner indicated:

BY E-MAIL

Russell Blythe, Esquire
Holmes J. Hawkins , III., Esquire
James J. Mayberry, Esquire
King & Spalding LLP
1180 Peachtree Street, N.E.
Atlanta, GA 30309-3521
rblythe@kslaw.com
jhawkins@kslaw.com
jmayberry@kslaw.com

YOUNG CONAWAY STARGATT
& TAYLOR, LLP

/s/ Pilar G. Kraman
John W. Shaw (No. 3362)
Karen E. Keller (No. 4489)
Pilar G. Kraman (No. 5199)
1000 West Street, 17th Floor
Wilmington, Delaware 19899
pkraman@ycst.com
(302) 571-6600

CommScope v. Belden
IPR2023-01061, -01062
CommScope Ex. 1061