US007274383B1

(12) **United States Patent**
Brown Elliot

(10) **Patent No.: US 7,274,383 B1**
(45) **Date of Patent: *Sep. 25, 2007**

(54) **ARRANGEMENT OF COLOR PIXELS FOR FULL COLOR IMAGING DEVICES WITH SIMPLIFIED ADDRESSING**

(75) Inventor: **Candice Hellen Brown Elliot**, Vallejo, CA (US)

(73) Assignee: **Clairvoyante, Inc**, Sebastopol, CA (US)

(*) Notice: Subject to any disclaimer, the term of this patent is extended or adjusted under 35 U.S.C. 154(b) by 326 days.

This patent is subject to a terminal disclaimer.

(21) Appl. No.: **09/628,122**

(22) Filed: **Jul. 28, 2000**

(51) **Int. Cl.**

G09G 5/02	(2006.01)
G09G 3/28	(2006.01)
G09G 3/32	(2006.01)
G09G 3/36	(2006.01)

(52) **U.S. Cl.** **345/694**; 345/690; 345/597; 345/598; 345/589; 345/695

(58) **Field of Classification Search** 345/613–618, 345/83, 88, 471, 472, 611, 589–606, 72, 690–695; 348/597, 340, 155, 369, 264, 803
See application file for complete search history.

(56) **References Cited**

U.S. PATENT DOCUMENTS

3,971,065	A	7/1976	Bayer	
4,353,062	A	10/1982	Lorteije et al.	
4,593,978	A	6/1986	Mourey et al.	
4,642,619	A	2/1987	Togashi	
4,651,148	A	3/1987	Takeda et al.	
4,751,535	A	6/1988	Myers	
4,773,737	A	9/1988	Yokono et al.	
4,786,964	A	11/1988	Plummer et al.	
4,792,728	A	12/1988	Chang et al.	
4,800,375	A	1/1989	Silverstein et al.	
4,822,142	A	4/1989	Yasui	
4,853,592	A	8/1989	Strathman	
4,874,986	A	10/1989	Menn et al.	
4,886,343	A	12/1989	Johnson	350/335
4,908,609	A	3/1990	Stroomer	
4,920,409	A	4/1990	Yamagishi	358/56
4,965,565	A	10/1990	Noguchi	
4,966,441	A	10/1990	Conner	
4,967,264	A	10/1990	Parulski et al.	
5,006,840	A	4/1991	Hamada et al.	
5,052,785	A	10/1991	Takimoto et al.	
5,113,274	A	5/1992	Takahashi et al.	
5,132,674	A	7/1992	Bottorf	
5,144,288	A	9/1992	Hamada et al.	
5,184,114	A	2/1993	Brown	
5,189,404	A	2/1993	Masimo et al.	
5,233,385	A	8/1993	Sampsell	
5,311,337	A	5/1994	McCartney, Jr.	
5,315,418	A	5/1994	Sprague et al.	359/41

(Continued)

FOREIGN PATENT DOCUMENTS

DE 299 09 537 U1 10/1999

(Continued)

OTHER PUBLICATIONS

Adobe Systems, Inc., website, 2002, http://www.adobe.com/products/acrobat/cooltype.html.

(Continued)

Primary Examiner—Jin-Cheng Wang

(57) **ABSTRACT**

A three-color pixel element for a display comprises a blue emitter disposed at the origin of a rectangular coordinate system having four quadrants, a pair of red emitters and a pair of green emitters spaced apart from the blue emitter and symmetrically disposed about the origin of the rectangular coordinate system in a first and second pair of opposing quadrants.

32 Claims, 3 Drawing Sheets

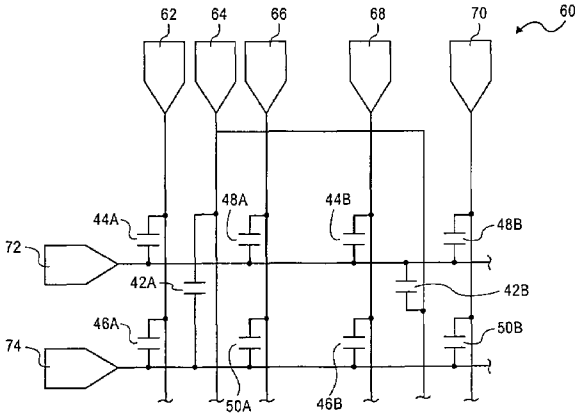

U.S. PATENT DOCUMENTS

5,334,996	A	8/1994	Tanigaki et al.	345/152
5,341,153	A	8/1994	Benzschawel et al.	345/152
5,398,066	A	3/1995	Martinez-Uriegas et al.	
5,436,747	A	7/1995	Suzuki	
5,461,503	A	10/1995	Deffontaines et al.	
5,535,028	A	7/1996	Bae et al.	
5,541,653	A	7/1996	Peters et al.	
5,561,460	A	10/1996	Katoh et al.	
5,563,621	A	10/1996	Silsby	
5,579,027	A	11/1996	Sakurai et al.	
5,642,176	A	6/1997	Abukawa et al.	
5,646,702	A *	7/1997	Akinwande et al.	349/69
5,648,793	A	7/1997	Chen	345/96
5,661,371	A	8/1997	Salerno et al.	
5,729,244	A *	3/1998	Lockwood	345/75.2
5,754,226	A	5/1998	Yamada et al.	
5,773,927	A	6/1998	Zimlich	
5,792,579	A	8/1998	Phillips	
5,815,101	A	9/1998	Fonte	
5,821,913	A	10/1998	Mamiya	
5,856,050	A	1/1999	Inoue et al.	
5,899,550	A	5/1999	Masaki	
5,949,496	A	9/1999	Kim	
5,973,664	A	10/1999	Badger	
6,002,446	A	12/1999	Eglit	
6,005,692	A *	12/1999	Stahl	359/15
6,008,868	A	12/1999	Silverbrook	348/790
6,034,666	A	3/2000	Kanai et al.	
6,037,719	A	3/2000	Yap et al.	
6,038,031	A	3/2000	Murphy	
6,049,626	A	4/2000	Kim	
6,061,533	A	5/2000	Kajiwara	
6,064,363	A	5/2000	Kwon	345/98
6,072,272	A	6/2000	Rumbaugh	
6,097,367	A	8/2000	Kuriwaki et al.	
6,108,122	A	8/2000	Ulrich et al.	
6,137,100	A *	10/2000	Fossum et al.	250/208.1
6,144,352	A	11/2000	Matsuda et al.	
6,147,664	A *	11/2000	Hansen	345/74.1
6,151,001	A *	11/2000	Anderson et al.	345/63
6,160,535	A	12/2000	Park	
6,163,038	A *	12/2000	Chen et al.	257/103
6,184,903	B1	2/2001	Omori	
6,188,385	B1	2/2001	Hill et al.	
6,198,507	B1	3/2001	Ishigami	
6,219,025	B1	4/2001	Hill et al.	
6,225,967	B1	5/2001	Hebiguchi	
6,225,973	B1	5/2001	Hill et al.	
6,236,390	B1	5/2001	Hitchcock	
6,239,783	B1	5/2001	Hill et al.	
6,243,055	B1	6/2001	Fergason	
6,243,070	B1	6/2001	Hill et al.	
6,262,710	B1 *	7/2001	Smith	345/589
6,271,891	B1	8/2001	Ogawa et al.	
6,299,329	B1	10/2001	Mui et al.	
6,326,981	B1	12/2001	Mori et al.	
6,327,008	B1	12/2001	Fujiyoshi	
6,346,972	B1	2/2002	Kim	
6,360,023	B1	3/2002	Betrisey et al.	
6,377,262	B1	4/2002	Hitchcock et al.	
6,392,717	B1	5/2002	Kunzman	
6,393,145	B2	5/2002	Betrisey et al.	
6,429,867	B1	8/2002	Deering	
6,441,867	B1	8/2002	Daly	
6,453,067	B1	9/2002	Morgan et al.	
6,459,419	B1	10/2002	Matsubayashi	
6,466,618	B1	10/2002	Messing et al.	
6,469,756	B1	10/2002	Booth, Jr.	
6,486,923	B1 *	11/2002	Maeshima et al.	348/649
6,628,068	B1 *	9/2003	Rorison et al.	313/504
6,661,429	B1 *	12/2003	Phan	345/694
6,680,761	B1	1/2004	Greene et al.	
6,903,754	B2	6/2005	Brown Elliott	
6,950,115	B2	9/2005	Brown Elliott	
6,950,156	B1	9/2005	Yoshida	
7,110,012	B2	9/2006	Messing et al.	
2001/0017515	A1	8/2001	Kusunoki et al.	
2001/0040645	A1	11/2001	Yamazaki	
2002/0012071	A1	1/2002	Sun	
2002/0015110	A1	2/2002	Brown	
2002/0017645	A1	2/2002	Yamazaki et al.	
2002/0122160	A1	9/2002	Kunzman	
2002/0140831	A1	10/2002	Hayashi	
2002/0180688	A1	12/2002	Drzaic et al.	
2002/0190648	A1	12/2002	Bechtel et al.	
2003/0011613	A1	1/2003	Booth, Jr.	
2003/0043567	A1	3/2003	Hoelen	
2003/0071826	A1	4/2003	Goertzen	
2003/0071943	A1	4/2003	Choo et al.	
2003/0090581	A1	5/2003	Credelle et al.	
2003/0117423	A1	6/2003	Brown Elliott et al.	
2003/0218618	A1 *	11/2003	Phan	345/629
2004/0061710	A1	4/2004	Messing et al.	
2005/0174363	A1	8/2005	Brown Elliott	
2005/0248262	A1	11/2005	Brown Elliott	
2005/0264588	A1	12/2005	Brown Elliott	

FOREIGN PATENT DOCUMENTS

DE	199 23 527		11/2000
DE	199 23 527	A1	11/2000
DE	201 09 354	U1	9/2001
EP	0 158 366	A2	10/1985
EP	0 203 005	A1	11/1986
EP	0 322 106	A2	1/1989
EP	0 671 650		9/1995
EP	0 878 969		9/1995
EP	0 793 214	A1	9/1997
EP	0 812 114	A1	12/1997
EP	0 899 604	A2	3/1999
EP	1083539	A2	3/2001
EP	1 261 014	A2	11/2002
EP	1 381 020	A2	1/2004
GB	2 133 912	A	8/1984
GB	2 146 478	A	4/1985
JP	60-107022		6/1985
JP	02-000826	A	1/1990
JP	03-78390		4/1991
JP	3-36239	B	5/1991
JP	06-102503		4/1994
JP	02-983027	B2	11/1999
JP	2001203919		7/2001
WO	WO97/23860		7/1997
WO	WO 00/21067		4/2000
WO	WO 00/42564		7/2000
WO	WO 00/42762		7/2000
WO	WO 00/45365		8/2000
WO	WO 00/65432		11/2000
WO	WO 00/67196		11/2000
WO	WO 00/70392		11/2000
WO	WO 01/10112	A2	2/2001
WO	WO 01/29817	A1	4/2001
WO	WO 01/52546	A2	7/2001
WO	WO 02/059685	A2	8/2002
WO	WO 03/014819	A1	2/2003

OTHER PUBLICATIONS

Betrisey, C., et al., "Displaced Filtering for Patterned Displays," 2000, *Society for Information Display (SID) 00 Digest*, pp. 296-299.

Carvajal, D., "Big Publishers Looking Into Digital Books," Apr. 3, 2000, *The New York Times*, Business/Financial Desk.

Elliott, C., "Active Matrix Display Layout Optimization for Subpixel Image Rendering," Sep. 2000, Proceedings of the 1st International Display Manufacturing Conference, pp. 185-189.

Elliott, C., "New Pixel Layout for PenTile Matrix," Jan. 2002, Proceedings of the International Display Manufacturing Conference, pp. 115-117.
Gibson Research Corporation, website, "Sub-Pixel Font Rendering Technology, How It Works," 2002, http://www.grc/com/ctwhat.html.
Microsoft Corporation, website, 2002, http://www.microsoft.com/reader/ppc/product/cleartype.html.
Microsoft Press Release, Nov. 15, 1998, Microsoft Research Announces Screen Display Breakthrough at COMDEX/Fall '98, PR Newswire.
Murch, M., "Visual Perception Basics," 1987, *SID*, Seminar 2, Tektronix, Inc., Beaverton, Oregon.
Okumura, H., et al., "A New Flicker-Reduction Drive Method for High-Resolution LCTVs," May 1991, *Society for Information Display (SID) International Symposium Digest of Technical Papers*, pp. 551-554.
Wandell, Brian A., Stanford University, "Fundamentals of Vision: Behavior, Neuroscience and Computation," Jun. 12, 1994, *Society for Information Display (SID) Short Course S-2*, Fairmont Hotel, San Jose, California.
"ClearType magnified," *Wired Magazine*, Nov. 8, 1999, Microsoft Typography, article posted Nov. 8, 1999, and last updated Jan. 27, 1999, © 1999 Microsoft Corporation, 1 page.
Credelle, Thomas L. et al., "P-00: MTF of High-Resolution PenTile Matrix™ Displays," *Eurodisplay 02 Digest*, 2002, pp. 1-4.
Daly, Scott, "Analysis of Subtriad Addressing Algorithms by Visual System Models," *SID Symp. Digest*, Jun. 2001, pp. 1200-1203.
Elliott, Candice-H. Brown et al., "Color Subpixel Rendering Projectors and Flat Panel Displays," New Initiatives in Motion Imaging, SMPTE Advanced Motion Imaging Conference, Feb. 27-Mar. 1, 2003, Seattle, Washington, pp. 1-4.
Elliott, Candice H. Brown et al., "Co-optimization of Color AMLCD Subpixel Architecture and Rendering Algorithms," *SID Symp. Digest*, May 2002, pp. 172-175.
Feigenblatt, R.I., "Full-color imaging on amplitude-quantized color mosaic displays," *SPIE*, vol. 1075, Digital Image Processing Applications, 1989, pp. 199-204.
Johnston, Stuart J., "An Easy Read: Microsoft's ClearType," *InformationWeek Online,* Redmond, WA, Nov. 23, 1998, 3 pages.
Johnston, Stuart J., "Clarifying ClearType," *InformationWeek Online*, Redmond, WA, Jan. 4, 1999, 4 pages.
"Just Outta Beta," *Wired Magazine*, Dec. 1999, Issue 7.12, 3 pages.
Klompenhouwer, Michiel A. et al., "Subpixel Image Scaling for Color Matrix Displays," *SID Symp. Digest*, May 2002, pp. 176-179.
Lee, Baek-Woon et al., "40.5L: Late-News Paper: TFT-LCE with RGBW Color System," *SID 03 Digest*, 2003, pp. 1212-1215.
Markoff, John, "Microsoft's Cleartype Sets Off Debate on Originality," *The New York Times*, Dec. 7, 1998, 5 pages.
"Microsoft Clear Type," http://www.microsoft.com/opentype/cleartype, Sep. 26, 2002, 4 pages.
Platt, John C., "Optimal Filtering for Patterned Displays," Microsoft Research, *IEEE Signal Processing Letters*, 2000, 4 pages.
Platt, John, "Technical Overview of ClearType Filtering," Microsoft Research, http://research.microsoft.com/users/jplatt/cleartype/default.aspx, Sep. 17, 2002, 3 pages.
Poor, Alfred, "LCDs: The 800-pound Gorilla," *Information Display*, Sep. 2002, pp. 18-21.
"Ron Feigenblatt's remarks on Microsoft Clear Type™," http://www.geocities.com/SiliconValley/Ridge/6664/ClearType.html, Dec. 5, 1998, Dec. 7, 1998, Dec. 12, 1999, Dec. 26, 1999, Dec. 30, 1999, and Jun. 19, 2000, 30 pages.
"Sub-Pixel Font Rendering Technology," © 2003 Gibson Research Corporation, Laguna Hills, CA, 2 pages.
Werner, Ken, "OLEDs, OLEDs, Everywhere . . . ," *Information Display*, Sep. 2002, pp. 12-15.
Krantz, John H. et al., "Color Matrix Display Image Quality: The Effect of Luminance and Spatial Sampling," *SID International Symposium, Digest of Technical Papers*, pp. 29-32, 1990.
Messing, Dean S. et al., "Improved Display Resolution of Subsampled Colour Images Using Subpixel Addressing," *Proc. Int. Conf. Image Processing (ICIP '02)*, Rochester, N.Y., IEEE Signal Processing Society, vol. 1, pp. 625-628, 2002.
Messing, Dean S. et al., "Subpixel Rendering on Non-Striped Colour Matrix Dispalys," *International Conference on Image Processing*, Barcelona, Spain, 4 pp., Sep. 2003.
PCT International Search Report for PCT/US02/39860 dated Jul. 30, 2003.
R. Martin, et al., "Detectability of Reduced Blue Pixel Court in Projection Displays", Society for Information Display, Symposium Digest, May 1993.
Lesperance, Jean E., Non-Final Office Action dated Mar. 9, 2004 in U.S. Appl. No. 09/916,232 (12 pages).
Lesperance, Jean E., Non-Final Office Action dated May 6, 2004 in U.S. Appl. No. 09/916,232 (9 pages).
Kaler, Stuart P., Response to Non-Final Office Action dated Sep. 3, 2004 in U.S. Appl. No. 09/916,232 (74 pages).
Lesperance, Jean E., Final Office Action dated Jan. 6, 2005 in U.S. Appl. No. 09/916,232 (24 pages).
Kaler, Stuart P., Response to Final Office Action dated Jan. 28, 2005 in U.S. Appl. No. 09/916,232 (36 pages).
C. Elliott, "Reducing Pixel Count without Reducing Image Quality", *Information Display*, vol. 15, pp. 22-25, Dec. 1999.
Non-Final Office Action, dated Jan. 15, 2004, in US Patent. 6,950,115 (U.S. Appl. No. 10/024,326) (15 pages).
Response to Non-Final Office Action (Jan. 15, 2004), dated May 10, 2004, in US Patent. 6,950,115 (U.S. Appl. No. 10/024,326) (15 pages).
Non-Final Office Action, dated Jun. 28, 2004, in US Patent. 6,950,115 (U.S. Appl. No. 10/024,326) (13 pages).
Response to Non-Final Office Action (Jun. 28, 2004), dated Oct. 27, 2004, in US Patent. 6,950,115 (U.S. Appl. No. 10/024,326) (17 pages).
Notice of Allowance, dated Jun. 1, 2005, in US Patent. 6,950,115 (U.S. Appl. No. 10/024,326) (10 pages).
Non-Final Office Action, dated Jul. 28, 2005, in US Patent Application Publication No. 2003/0090581 (U.S. Appl. No. 10/278,393) (23 pages).
Response to Non-Final Office Action (Jul. 28, 2005), dated Jan. 30, 2006, in US Patent Application Publication No. 2003/0090581 (U.S. Appl. No. 10/278,393) (25 pages).
Final Office Action, dated Apr. 18, 2006, in US Patent Application Publication No. 2003/0090581 (U.S. Appl. No. 10/278,393) (19 pages).
Non-Final Office Action, dated May 4, 2005, in US Patent Application Publication No. 2003/0117423 (U.S. Appl. No. 10/278,328) (18 pages).
Response to Non-Final Office Action (May 4, 2005), dated Nov. 3, 2005, in US Patent Application Publication No. 2003/0117423 (U.S. Appl. No. 10/278,328) (18 pages).
Final Office Action, dated Feb. 17, 2006, in US Patent Application Publication No. 2003/0117423 (U.S. Appl. No. 10/278,328) (9 pages).
PCT International Search Report dated Aug. 21, 2002 for PCT/US02/14925 (U.S. Appl. No. 10/024,326).
PCT International Search Report dated Jul. 17, 2003 for PCT/US02/39859 (U.S. Appl. No. 10/278,393).
PCT International Search Report dated Jul. 30, 2003 for PCT/US02/39860 (U.S. Appl. No. 10/278,328).
USPTO, Notice of Allowance, dated Feb. 7, 2005 in U.S. Patent No. 6,903,754 (U.S. Appl. No. 09/916,232).
Clairvoyante Inc, Response to Non-Final Office Action, dated Sep. 18, 2006 in US Patent Publication No. 2003/0090581, (U.S. Appl. No. 10/278,393).
USPTO, Non-Final Office Action, dated Nov. 14, 2006 in US Patent Publication No. 2003/0090581, (U.S. Appl. No. 10/278,393).
USPTO, Interview Summary, dated Mar. 17, 2006 in US Patent Publication No. 2003/0117423, (U.S. Appl. No. 10/278,328).
Clairvoyante Inc, Response to Final Office Action, dated Aug. 16, 2006 in US Patent Publication No. 2003/0117423, (U.S. Appl. No. 10/278,328).
USPTO, Non-Final Office Action, dated Nov. 15, 2006 in US Patent Publication No. 2003/0117423, (U.S. Appl. No. 10/278,328).

* cited by examiner

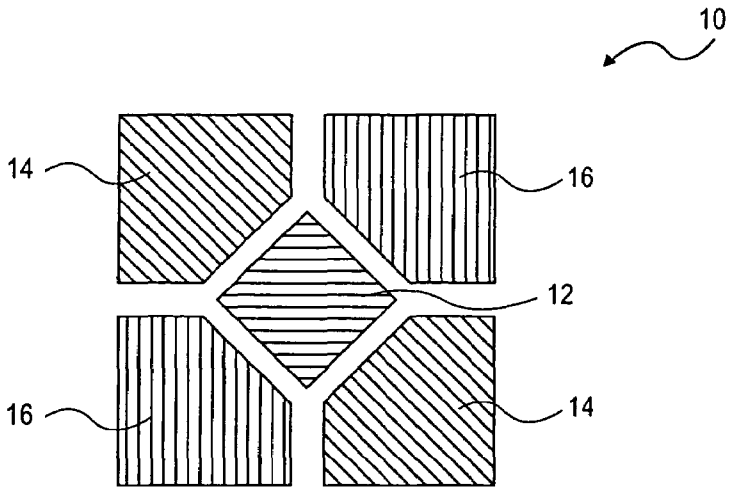

FIG. 1A

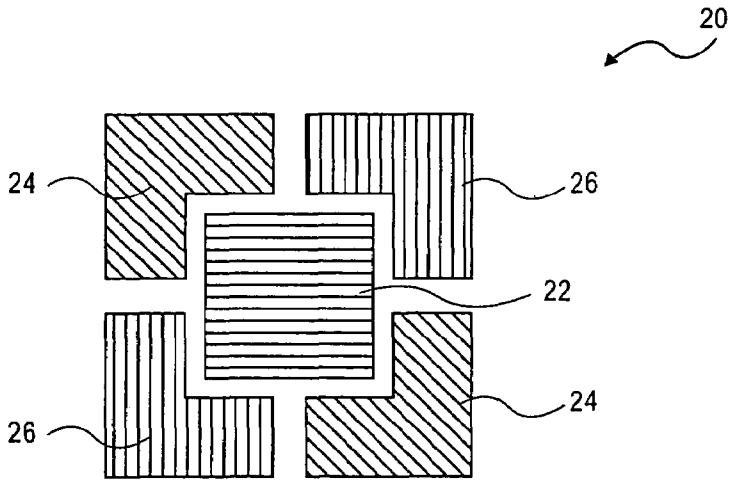

FIG. 1B

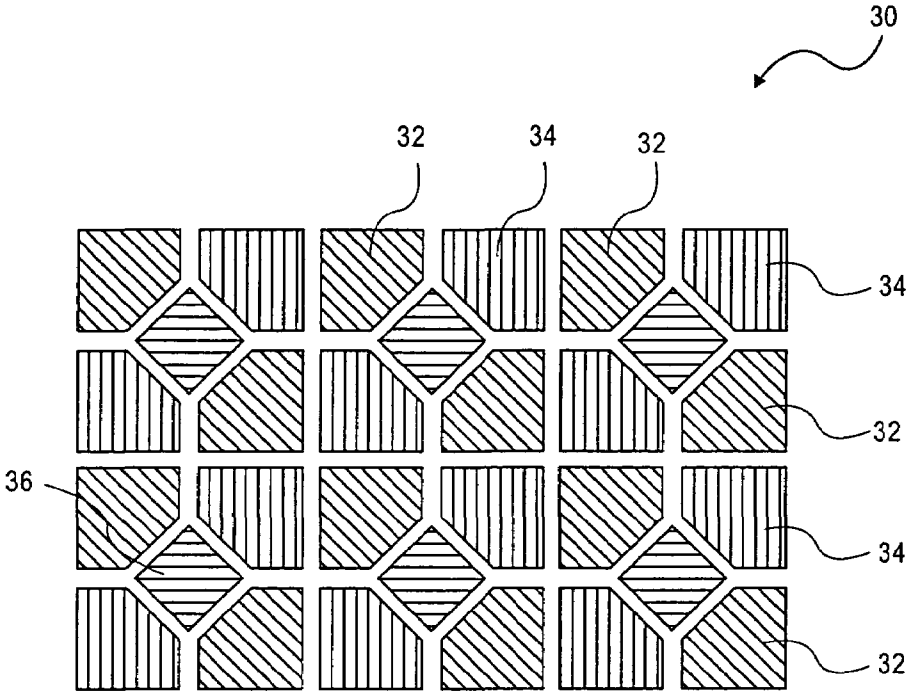

FIG. 2

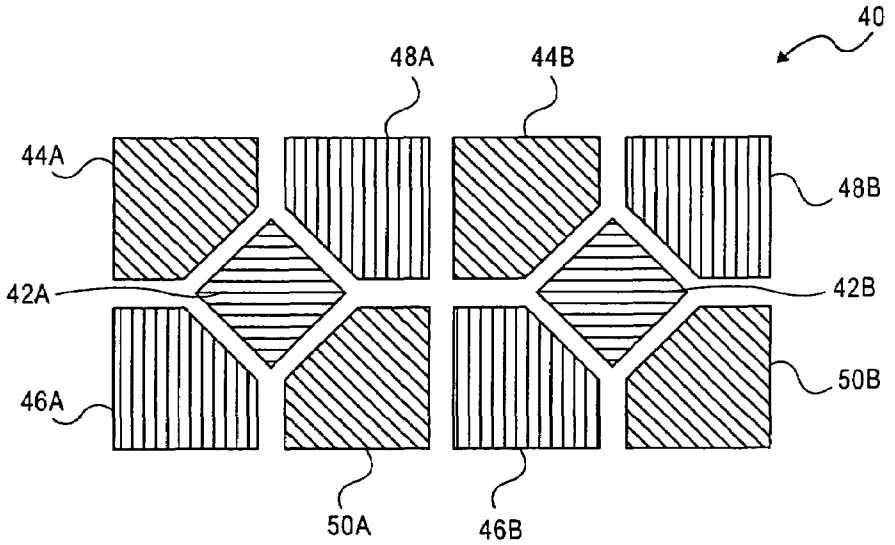
40
48A
44B
44A
48B
42A
42B
46A
50B
50A
46B

FIG. 3A

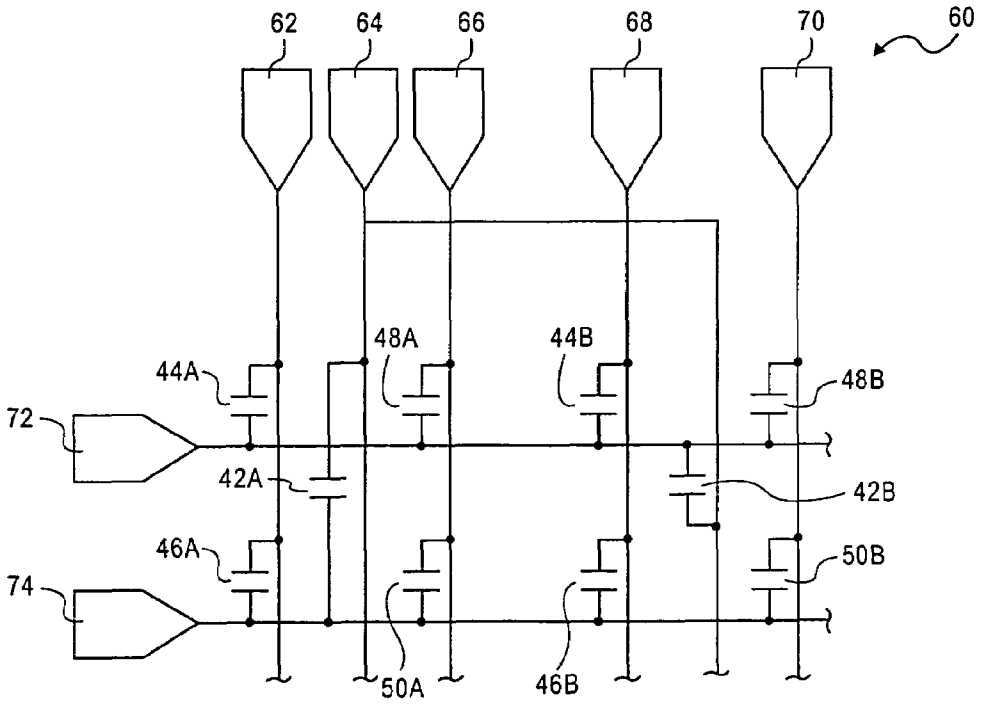
62
64
66
68
70
60
48A
44B
44A
48B
72
42A
42B
46A
50B
74
50A
46B

FIG. 3B

ARRANGEMENT OF COLOR PIXELS FOR FULL COLOR IMAGING DEVICES WITH SIMPLIFIED ADDRESSING

BACKGROUND OF THE INVENTION

1. Field of the Invention

The present invention relates to color pixel arrangements. Specifically the present invention relates to color pixel arrangements used in electronic imaging devices and displays.

2. The Prior Art

Full color perception is produced in the eye by three-color receptor nerve cell types called cones. The three types are sensitive to different wave lengths of light: long, medium, and short ("red", "green", and "blue" respectively). The relative density of the three differs significantly from one another. There are slightly more red receptors than green. There are very few blue receptors compared to red or green. In addition to the color receptors there are relative wavelength insensitive receptors called rods that contribute to monochrome night vision.

The human vision system processes the information detected by the eye in several perceptual channels; luminance, chromanance, and motion. Motion is only important for flicker threshold to the imaging system designer. The luminance channel takes the input from all of the available receptors, cones and rods. It is "color blind". It processes the information in such a manner that the contrast of edges is enhanced. The chroma channel does not have edge contrast enhancement. Since the luminance channel uses and enhances every receptor, the resolution of the luminance channel is several times higher than the chroma channel. The blue receptor contribution to luminance perception is less than 5%, or one part in twenty. Thus the error introduced by lowering the blue resolution by one octave will be barely noticeable by the most perceptive viewer, if at all, as experiments at NASA, Ames Research Center (R. Martin, J. Gille, J. Larimer, Detectability of Reduced Blue Pixel Count in Projection Displays, SID Digest 1993) have demonstrated.

Color perception is influenced by a process called "assimilation" or the Von Bezold color blending effect. This is what allows separate color pixels (called "subpixels" by some authors) of a display to be perceived as the mixed color. This blending effect happens over a given angular distance in the field of view. Because of the relatively scarce blue receptors this blending happens over a greater angle for blue than for red or green. This distance is approximately 0.25° for blue, while for red or green it is approximately 0.12°. At a viewing distance of twelve inches, 0.25° subtends 50 mils (1,270μ) on a display. Thus, if the blue pixel pitch is less than half (625μ) of this blending pitch, the colors will blend without loss of picture quality.

The present state of the art color single plane imaging matrix, for flat panel displays and solid state camera chips is the RGB color triad. The system takes advantage of the Von Bezold effect by separating the three colors and placing equal spatial frequency weight on each color. Two manufacturers have shown improvements in display design by using dual or triple panels whose images are superimposed. One manufacturer of projection displays used three panels, red, green, and blue. The blue panel uses reduced resolution in accordance with the match between human vision requirements and the displayed image. Another manufacturer, Planar Systems of Beaverton, Oreg. employs a "Multi-row Adressing" technique having a dual electroluminescent panel, one panel with red and green pixels, the other with blue pixels to build a developmental model. The blue pixels have reduced resolution in the vertical axis only. This allows the blue phosphors to be excited at a higher rate than the red and green pixels, thus overcoming a problem with lower blue phosphor brightness. The problem with the prior art is that in providing the same matched resolution balance between human vision and display, additional display panels/planes are used, along with additional driver electronics.

Other display methods such as disclosed in U.S. Pat. No. 6,008,868 issued Dec. 28, 1999 to Silverbrook use binary controlled emitters. In using binary controlled emitters, each emitter has a discrete luminance value, therefore, requiring the display to have an exact area to luminance relationship. This prior art used reduced blue "bit depth" built into the panel in accordance with human vision's lower blue color space increments. Conventional display methods also use a single color in a vertical stripe. Since conventional stripes have limited the Modulation Transfer Function (MTF), high spatial frequency resolution, in the horizontal axis, stripes of a single color are non-optimal.

BRIEF DESCRIPTION OF THE INVENTION

According to one aspect of the invention a three-color pixel element of spaced-apart emitters is disclosed. The pixel element consists of a blue emitter disposed at the center of a pair of opposing red and a pair of opposing green emitters. The plurality of pixel elements may be arranged in rows and columns to form a display. This array provides better perceived resolution and appearance of single full color displays by matching the human vision system.

According to another aspect of the invention, the drive matrix for the pixel array is disclosed. While the array consists of a plurality of rows and columns of the three-color pixel element of the present invention, the drive matrix consists of a plurality of row and column drivers to drive the individual emitters. The row drivers drive the red, green and blue emitters in each row, and the red and green emitters in each column are driven by a single column driver. However, a single column driver drives two columns of blue emitters. Thus, the number of drive lines and associated driver electronics used in the prior art are reduced in the present invention.

BRIEF DESCRIPTION OF THE DRAWINGS

FIGS. **1***a* and **1***b* are arrangements of a three-color pixel element of the present invention.

FIG. **2** is an array of three-color pixel elements of the present invention.

FIG. **3***a* is an arrangement of two three-color pixel elements of the present invention, aligned horizontally.

FIG. **3***b* is a diagram showing an illustrative drive matrix for the pixel arrangement of FIG. **3***a* according to the present invention.

DETAILED DESCRIPTION OF A PREFERRED EMBODIMENT

Those of ordinary skill in the art will realize that the following description of the present invention is illustrative only and not in any way limiting. Other embodiments of the invention will readily suggest themselves to such skilled persons.

FIG. **1***a* shows an illustrative embodiment of an arrangement of a three-color pixel element **10** according to the

present invention. The pixel element consists of a blue emitter **12**, two red emitters **14**, and two green emitters **16**. The blue emitter **12** is disposed at the origin of a rectangular coordinate system having four quadrants, and the pair of red emitters **14**, and the pair of green emitters **16** are disposed at opposing quadrants of the rectangular coordinate system. As shown in FIG. **1***a*, the blue emitter **12** is square shaped, having corners aligned at the x and y axes of the rectangular coordinate system, and the opposing pairs of red **14** and green **16** emitters are generally square shaped, having truncated inwardly-facing corners forming edges parallel to the sides of the blue emitter **12**. u

Another illustrative embodiment of a three-color pixel element **20** according to the present invention is shown in FIG. **1***b*. In this embodiment, a blue emitter **22** is square shaped having sides aligned parallel to the x and y axes of a rectangular coordinate system, while the opposing pairs of red **24** and green **26** emitters are L-shaped. The L-shaped emitters envelop the blue emitter having the inside corners of the L-shaped emitters aligned with the corners of the blue emitter.

According to a preferred embodiment of the present invention, the pixel has equal red, green and blue emitter area. This may be achieved by placing in the center of the pixel a blue emitter having an area larger than the areas of the individual red and green emitters. Those of ordinary skill in the art will recognize that, in other embodiment of the present invention, the area of the blue emitter may be smaller in relation to either the red or green emitters. The blue emitter may be brighter than either the red or green emitters, or it may be the same brightness as the red and green emitters. For example, the drive-to-luminance gain of the blue emitter may be greater than that of the red or green emitters.

Although the above description is illustrative of a preferred embodiment of the present invention, those of ordinary skill in the art will readily recognize other alternatives. For example, the emitters may have different shapes, such as rounded or polygonal. They may also be diffuse rather than having sharp edges. The pixels need not be arranged with equal spatial frequency in each axis. The aperture ratio between the emitters may be minimized to substantially non-existent or it may be very pronounced, and the space may also be different colors, including black or white. The emitters may be any technology known or invented in the future, such as displays using Liquid Crystal (LCD), Plasma, Thin Film Electroluminescent, Discrete Light Emitting Diode (LED), Polymer Light Emitting Diode, Electro-Chromic, Electro-Mechanical, Incandescent Bulb, or Field Emission excited phosphor (FED).

FIG. **2** is an array **30** of the three-color pixel element **10** of FIG. **1***a*. The array **30** is repeated across a panel or chip to complete a device with a desired matrix resolution. The repeating three-color pixels **10** form a "checker board" of alternating red **32** and green **34** emitters with blue emitters **36** distributed evenly across the device, but at half the resolution of the red **32** and green **34** emitters.

One advantage of the three-color pixel element array of the present invention is improved resolution of color displays. This occurs since only the red and green emitters contribute significantly to the perception of high resolution in the luminance channel. Thus reducing the number of blue emitters and replacing some with red and green emitters improves resolution by more closely matching human vision.

Dividing the red and green emitters in half in the vertical axis to increase spatial addressability is an improvement over the conventional vertical single color stripe of the prior art. An alternating "checkerboard" of red and green emitters allows the Modulation Transfer Function (MTF), high spatial frequency resolution, to increase in both the horizontal and the vertical axes.

The three-color pixel element array may also be used in solid state image capture devices found in modern consumer video cameras and electronic still cameras. An advantage of using the reduced blue emitter resolution in both image capture and display is that stored images do not need to supply the same resolution for each color in storage or processing. This presents potential savings during coding, compression, and decompression of electronically stored images, including software and hardware in electronic imaging and display systems such as computers, video games, and television, including High Definition Television (HDTV) recording, playback, broadcasting, and display.

FIG. **3***a* is an arrangement **40** of two three-color pixel elements of the present invention aligned horizontally. A blue emitter **42***a* is disposed at the origin of a first three-color pixel element, and a blue emitter **42***b* is disposed at the origin of a second three-color pixel element. Red emitters **44***a* and **44***b* are disposed in the upper left corners of the first and second pixel elements. Green emitters **46***a* and **46***b* are disposed in the lower left corners of the first pixel and second pixel elements. Green emitters **48***a* and **48***b* are disposed in the upper right corners of each pixel element, and red emitters **50***a* and **50***b* are disposed in the lower right corners of each pixel element.

FIG. **3***b* is a diagram of an illustrative drive matrix **60**, according to the present invention, for the pixel arrangement **40**. The emitters are schematically represented as capacitors for convenience. The emitters of the invention may be active electronic devices such as Thin Film Transistors (TFT) found in Active Matrix Liquid Crystal Display (AMLCD), or Charge Coupled Devices as found in camera chips, or other suitable devices.

The illustrative drive matrix **60** shown in FIG. **3***b* consists of a 2×5 drive matrix, where four column drivers drive the red and green emitters and a single column driver drives the blue emitters. A first column driver **62** drives the red emitter **44***a* and the green emitter **46***a*. The blue emitters **42***a* and **42***b* are tied together and driven by a second column driver **64**. A third column driver **66** drives the green emitter **48***a* and the red emitter **50***a*, while a fourth column driver **68** drives the red emitter **44***b* and the green emitter **46***b*. The green emitter **48***b* and the red emitter **50***b* are driven by a fifth column driver **70**.

The row drivers of the present invention drive the red, green and blue emitters in each row. Row driver **72** drives red emitters **44***a* and **44***b*, green emitters **48***a* and **48***b*, as well as blue emitter **42***b*. Row driver **74** drives green emitters **46***a* and **46***b*, red emitters **50***a* and **50***b* and blue emitter **42***a*. Each emitter can be driven at continuous luminance values at specific locations in a pixel, unlike emitters in the prior art, which are driven at discrete luminance values at random locations in a pixel.

The drive matrix disclosed in the present invention uses approximately 16% fewer column drivers to present a given image than does a prior art 2×6 drive matrix for the triad arrangement. The column drive lines are reduced since the blue emitters **12** are combined. This entire arrangement can be turned 90 degrees such that the combined blue emitters **12** are driven by the same row driver. All such topologically identical variants known in the art are possible embodiments

of this invention. In addition, the driver type, voltage, and timing can be the same as already known in the art for each device technology.

While embodiments and applications of this invention have been shown and described, it would be apparent to those skilled in the art that many more modifications than mentioned above are possible without departing from the inventive concepts herein. The invention, therefore, is not to be restricted except in the spirit of the appended claims.

What is claimed is:

1. A display comprising substantially a plurality of three-color pixel elements that form at least one row of said pixel elements, said three-color pixel element comprising:

a blue emitter disposed at an origin of a rectangular coordinate system having four quadrants;

a pair of red emitters spaced apart from said blue emitter and symmetrically disposed about said origin in a first pair of opposing quadrants of said rectangular coordinate system;

a pair of green emitters spaced apart from said blue emitter and symmetrically disposed about said origin in a second pair of opposing quadrants of said rectangular coordinate system; and

wherein said display further comprises at least first and second gate drivers oriented in a first direction and at least first and second data drivers oriented in a second direction different from said first direction;

wherein a first blue emitter is connected to a first gate driver in said first direction and to a first data driver in said second direction; and

wherein a second neighboring blue emitter is connected to said first data driver in said second direction.

2. The display of claim **1** wherein:

said blue emitter is polygonal having corners aligned at x and y axes of said rectangular coordinate system;

said red emitters are polygonal, each having an inwardly-facing edge parallel to a side of said polygonal blue emitter; and

said green emitters are polygonal, each having an inwardly-facing edge to a side of said polygonal blue emitter.

3. The display of claim **2** wherein:

said blue emitter is four-sided having equal internal angles, having corners aligned at x and y axes of said rectangular coordinate system;

said red emitters are four-sided having equal internal angles, each having a truncated inwardly-facing corner forming an edge parallel to a side of said four-sided blue emitter; and

said green emitters are four-sided having equal internal angles, each having a truncated inwardly-facing corner forming an edge parallel to a side of said four-sided blue emitter.

4. The display of claim **3** wherein:

said blue emitter is square having corners aligned at x and y axes of said rectangular coordinate system;

said red emitters are square, each having a truncated inwardly-facing corner forming an edge parallel to a side of said square blue emitter; and

said green emitters are square, each having a truncated inwardly-facing corner forming an edge parallel to a side of said square blue emitter.

5. The display of claim **1** wherein:

said blue emitter is square-shaped having sides aligned parallel to x and y axes of said rectangular coordinate system; and

said red emitters and said green emitters are L-shaped and envelop said square blue emitter.

6. The display of claim **1** wherein said blue emitter comprises an emitting area larger than that of each of said red emitters and said green emitters.

7. The display of claim **1** wherein said blue emitter has a larger drive-to-luminance gain than that of each of said red emitters and said green emitters.

8. The display of claim **1** wherein said first and second directions of said gate and data drivers are substantially orthogonal.

9. The display of claim **1** wherein said first and second directions of said gate and data drivers are oriented along substantially mutually independent axes.

10. The display of claim **1** wherein said first direction is a row direction and said second direction is a column direction on said display.

11. The display of claim **1** wherein said first direction is a column direction and said second direction is a row direction on said display.

12. The display of claim **1** wherein said second neighboring blue emitter is further connected to a second gate driver in said first direction.

13. A display comprising substantially a plurality of three-color pixel elements that form at least one row of pixel elements, said three-color pixel element comprising:

a pair of red emitters, outer corners of each forming a first two opposing corners of a square;

a pair of green emitters, outer corners of each forming a second two opposing corners of said square;

a blue emitter disposed at a center of said square;

wherein said display further comprises at least first and second gate drivers oriented in a first direction and at least first and second data drivers oriented in a second direction different from said first direction;

wherein a first blue emitter is connected to a first gate driver in said first direction and to a first data driver in said second direction; and

wherein a second neighboring blue emitter is connected to a second gate driver in said first direction and to said first data driver in said second direction.

14. The display of claim **13** wherein:

said blue emitter disposed at said center of said square and is polygonal having sides aligned such that imaginary lines perpendicularly bisecting each side pass through corners of said polygon;

said red emitters are polygonal, each having an inwardly-facing edge parallel to an edge of said polygonal blue emitter; and

said green emitters are polygonal, each having an inwardly-facing edge parallel an edge of said polygonal blue emitter.

15. The display of claim **14** wherein:

said blue emitter disposed at said center of said square and is four-sided having equal internal angles, having sides aligned such that imaginary lines perpendicularly bisecting each side pass through said corners of said square;

said red emitters are four-sided having equal internal angles, each having a truncated inwardly-facing corner forming a line parallel to an edge of said four-sided blue emitter; and

said green emitters are four sided having equal internal angles, each having a truncated inwardly-facing corner forming a line parallel to an edge of said four-sided blue emitter.

16. The display of claim 15 wherein:

said blue emitter disposed at said center of said square and is square-shaped having sides aligned such that imaginary lines perpendicularly bisecting each side pass through said corners of said square;

said red emitters are square-shaped, each having a truncated inwardly-facing corner forming a line parallel to an edge of said four-sided blue emitter; and

said green emitters are square-shaped, each having a truncated inwardly-facing corner forming an edge parallel to a side of said four-sided blue emitter.

17. The display of claim 13 wherein:

said blue emitter disposed at said center of said square and is square-shaped having sides parallel to sides of said square;

said red emitters and green emitters are L-shaped and envelop said square-shaped blue emitter.

18. An array for a display comprising:

a plurality of row positions;

a plurality of column positions; and

a plurality of three-color pixel elements, one of said elements disposed in each of said row positions and said column positions, each of said three-color pixel elements comprising:

a blue emitter disposed at an origin of a rectangular coordinate system having four quadrants;

a pair of red emitters spaced apart from said blue emitter and symmetrically disposed about said origin in a first pair of opposing quadrants of said rectangular coordinate system;

a pair of green emitters spaced apart from said blue emitter and symmetrically disposed about said origin in a second pair of opposing quadrants of said rectangular coordinate system; and

wherein each said emitter is connected to a column driver and at least two neighboring blue emitters in a same row are connected to the same column driver.

19. The array of claim 18 wherein the spatial frequency of each said three-color pixel element in a row direction is greater than in the column direction.

20. The array of claim 18 wherein the spatial frequency of each said three-color pixel element in a column direction is greater than in the row direction.

21. An array for a display comprising:

a plurality of row positions;

a plurality of column positions; and

a plurality of three-color pixel elements, one of said elements disposed in each of said row positions and said column positions, each of said three-color pixel elements comprising:

a blue emitter disposed at a center of said square;

a pair of red emitters spaced apart from said blue emitter, outer corners of each forming a first two opposing corners of a square

a pair of green emitters spaced apart from said blue emitter, outer corners of each forming a second two opposing corners of said square; and

wherein each said emitter is connected to a column driver and at least two neighboring blue emitters in a same row are connected to the same column driver.

22. The array of claim 21 wherein the spatial frequency of each said three-color pixel element in a row direction is greater than in the column direction.

23. The array of claim 21 wherein the spatial frequency of each said three-color pixel element in a column direction is greater than in the row direction.

24. In an array of three-color pixel elements, a row structure comprising:

first and second three-color pixel elements, each three-color pixel element including first and second red emitters, first and second green emitters, and a blue emitter,

first and second row line drivers;

a first row line coupled to said first row line driver, said first row line coupled to said blue emitter of said second three-color pixel element, and said first red emitter and said first green emitter of said first and said second three-color pixel element;

a second row line coupled to said second row line driver, said second row line coupled to said blue emitter of said first three-color pixel element, and said second red emitter and said second green emitter of said first and said second three-color pixel element;

first through fifth column line drivers;

a first column line coupled to said first column line driver, said first column line coupled to said first red emitter and said second green emitter of said first three-color pixel element;

a second column line coupled to said second column line driver, said second column line coupled to said blue emitter of said first and said second three-color pixel element;

a third column line coupled to said third column line driver, said third column line coupled to said second red emitter and said first green emitter of said first three-color pixel element;

a fourth column line coupled to said fourth column line driver, said fourth column line coupled to said first red emitter and said second green emitter of said second three-color pixel element; and

a fifth column line coupled to said fifth column line driver, said fifth column line coupled to said second red emitter and said first green emitter of said second three-color pixel element.

25. An array comprising:

a plurality of rows, each row comprising:

first and second three-color pixel elements, each three-color pixel element including first and second red emitters, first and second green emitters, and a blue emitter;

first and second row line drivers;

a first row line coupled to said first row line driver, said first row line coupled to said blue emitter of said second three-color pixel element, and said first red emitter and said first green emitter of said first and said second three-color pixel element;

a second row line coupled to said second row line driver, said second row line coupled to said blue emitter of said first three-color pixel element, and said second red emitter and said second green emitter of said first and said second three-color pixel element;

first through fifth column line drivers;

a first column line coupled to said first column line driver, said first column line spanning said plurality of rows, said first column line coupled to said first red emitter and said second green emitter of each said first three-color pixel element in each row;

a second column line coupled to said second column line driver, said second column line spanning said plurality of rows, said second column line coupled to ach said blue emitter of said first and second three-color pixel element in each row;

a third column line coupled to said third column line driver, said third column line spanning said plurality of rows, said third column line coupled to said second red emitter and said first green emitter of each said first three color pixel element in each row;

a fourth column line coupled to said fourth column line driver, said fourth column line spanning said plurality of rows, said fourth column line coupled to said first red emitter and said second green emitter of each said second three-color pixel element in each row; and

a fifth column line coupled to said fifth column line driver, said fifth column line spanning said plurality of rows, said fifth column line coupled to said second red emitter and said first green emitter of each said second three-color pixel element in each row.

26. An image capture device comprising a plurality of three-color pixel elements that form at least one row of pixel elements; each three-color pixel element comprising:

a blue emitter disposed at an origin of a rectangular coordinate system having four quadrants;

a pair of red emitters spaced apart from said blue emitter and symmetrically disposed about said origin in a first pair of opposing quadrants of said rectangular coordinate system;

a pair of green emitters spaced apart from said blue emitter and symmetrically disposed about said origin in a second pair of opposing quadrants of said rectangular coordinate system; and

wherein each said emitter is connected to a column driver and at least two neighboring blue emitters in a same row are connected to the same column driver.

27. A display substantially comprising

at least first and second gate drivers oriented in a first direction and at least first and second data drivers oriented in a second direction different from said first direction; and

a plurality of three-color pixel elements that form at least one row of pixel elements, each three-color pixel element comprising:

a blue emitter;

a pair of red emitters;

a pair of green emitters such that said red emitters and said green emitters form substantially a checkerboard pattern upon said display; and

wherein a first blue emitter is connected to a first gate driver in said first direction and to a first data driver in said second direction; and wherein a second neighboring blue emitter is connected to said first data driver in said second direction.

28. The display of claim **27** wherein each three-color pixel element further comprises one of a group of patterns, said group comprising:

G R R G
 B B
R G And G R.

29. The display of claim **27** wherein said display is one of a group comprising a liquid crystal display, an organic light emitting diode display, an electro luminescent display, a plasma display, and a field emission display.

30. The display of claim **27** wherein said first direction is a column direction.

31. The display of claim **27** wherein said first direction is a row direction.

32. The display of claim **27** wherein said second neighboring blue emitter is further connected to a second gate driver in said first direction.

* * * * *