Meta

Meta Platforms, Inc. v. Jawbone Innovations, LLC

IPR2023-01084 (U.S. Patent No. 8,321,213)
IPR2023-01128 (U.S. Patent No. 8,326,611)

Petitioner's Demonstratives
October 9, 2024

Overview of Instituted Grounds

Ground	Prior Art	’213 Patent Challenged Claims	’611 Patent Challenged Claims
1	Avendano, Visser	**14**-17, 35-36, 39-**42**	**1**-2, 5-7, 25-28
2	Avendano, Visser, Bisgaard	18-26, 33, 34	8-16, 23-24
3	Avendano, Visser, Bisgaard, Hou	27-29	17-19
4	Avendano, Visser, Bisgaard, Hou, and Frequency Art	30-32	20-22

Meta Platforms, Inc. - Ex. 1021
Meta Platforms, Inc. v. Jawbone Innovations, LLC
IPR2023-01084, Page 2 of 61

Overview

Claim Construction

- Claimed “filter” includes a “delay”

Prior Art

- Independent Claims
  - Avendano meets the claimed “filter”
  - Avendano + Visser render obvious the claimed “filter”
- Dependent Claims
  - Prior Art Applies a Calibration (Dep. Claim 15 of 213, Dep. Claim 5 of 611)
  - Prior Art Performs Compensation (Dep. Claim 16 of 213, Dep. Claim 6 of 611)
  - Prior Art Applies a Delay (Dep. Claim 17 of 213, Dep. Claim 7 of 611)
  - Prior Art Applies Filter To Both Signals (Dep. Claim 19 of 213, Dep. Claim 9 of 611)
  - Prior Art Applies the Calibration (Dep. Claim 27 of 213, Dep. Claim 17 of 611)

Challenged Patents

Meta Platforms, Inc. - Ex. 1021
Meta Platforms, Inc. v. Jawbone Innovations, LLC
IPR2023-01084, Page 4 of 61

Challenged Patents

’213 Patent
Filed: Oct. 26, 2009
Issued: Nov. 27, 2012

US008321213B2

(12) **United States Patent**
Petit et al.

(10) **Patent No.: US 8,321,213 B2**
(45) **Date of Patent: *Nov. 27, 2012**

(54) **ACOUSTIC VOICE ACTIVITY DETECTION (AVAD) FOR ELECTRONIC SYSTEMS**

(75) Inventors: **Nicolas Petit**, San Francisco, CA (US); **Gregory Burnett**, Dodge Center, MN (US); **Zhinian Jing**, San Francisco, CA (US)

(73) Assignee: **AliphCom, Inc.**, San Francisco, CA (US)

(*) Notice: Subject to any disclaimer, the term of this patent is extended or adjusted under 35 U.S.C. 154(b) by 540 days.

This patent is subject to a terminal disclaimer.

(21) Appl. No.: **12/606,146**

(22) Filed: **Oct. 26, 2009**

(65) **Prior Publication Data**

US 2010/0128894 A1 May 27, 2010

Related U.S. Application Data

(63) Continuation-in-part of application No. 12/139,333, filed on Jun. 13, 2008, and a continuation-in-part of application No. 11/805,987, filed on May 25, 2007, now abandoned.

(60) Provisional application No. 61/108,426, filed on Oct. 24, 2008.

(51) **Int. Cl.**
G10L 11/06 (2006.01)

(52) **U.S. Cl.** **704/208**; 704/214

(58) **Field of Classification Search** 704/208, 704/210, 214, 215; 381/99, 100, 46
See application file for complete search history.

(56) **References Cited**

U.S. PATENT DOCUMENTS

5,459,814	A *	10/1995	Gupta et al.	704/233
7,171,357	B2 *	1/2007	Boland	704/231
7,246,058	B2 *	7/2007	Burnett	704/226
7,464,029	B2 *	12/2008	Visser et al.	704/210
8,019,091	B2 *	9/2011	Burnett et al.	381/71.8
2009/0089053	A1 *	4/2009	Wang et al.	704/233

* cited by examiner

Primary Examiner — Abul Azad
(74) *Attorney, Agent, or Firm* — Kokka & Backus, PC

(57) **ABSTRACT**

Acoustic Voice Activity Detection (AVAD) methods and systems are described. The AVAD methods and systems, including corresponding algorithms or programs, use microphones to generate virtual directional microphones which have very similar noise responses and very dissimilar speech responses. The ratio of the energies of the virtual microphones is then calculated over a given window size and the ratio can then be used with a variety of methods to generate a VAD signal. The virtual microphones can be constructed using either an adaptive or a fixed filter.

42 Claims, 35 Drawing Sheets

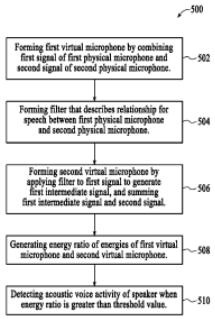

’611 Patent
Filed: Oct. 26, 2009
Issued: Dec. 4, 2012

US008326611B2

(12) **United States Patent**
Petit et al.

(10) **Patent No.: US 8,326,611 B2**
(45) **Date of Patent: *Dec. 4, 2012**

(54) **ACOUSTIC VOICE ACTIVITY DETECTION (AVAD) FOR ELECTRONIC SYSTEMS**

(75) Inventors: **Nicolas Petit**, San Francisco, CA (US); **Gregory Burnett**, Dodge Center, MN (US); **Zhinian Jing**, San Francisco, CA (US)

(73) Assignee: **AliphCom, Inc.**, San Francisco, CA (US)

(*) Notice: Subject to any disclaimer, the term of this patent is extended or adjusted under 35 U.S.C. 154(b) by 546 days.

This patent is subject to a terminal disclaimer.

(21) Appl. No.: **12/606,140**

(22) Filed: **Oct. 26, 2009**

(65) **Prior Publication Data**

US 2010/0128881 A1 May 27, 2010

Related U.S. Application Data

(63) Continuation-in-part of application No. 11/805,987, filed on May 25, 2007, now abandoned, and a continuation-in-part of application No. 12/139,333, filed on Jun. 13, 2008.

(60) Provisional application No. 61/108,426, filed on Oct. 24, 2008.

(51) **Int. Cl.**
G10L 11/06 (2006.01)

(52) **U.S. Cl.** **704/208**; 704/214

(58) **Field of Classification Search** 704/208, 704/210, 214, 215; 381/99, 100, 46
See application file for complete search history.

(56) **References Cited**

U.S. PATENT DOCUMENTS

5,459,814	A *	10/1995	Gupta et al.	704/233
7,171,357	B2 *	1/2007	Boland	704/231
7,246,058	B2 *	7/2007	Burnett	704/226
7,464,029	B2 *	12/2008	Visser et al.	704/210
8,019,091	B2 *	9/2011	Burnett et al.	381/71.8
2009/0089053	A1 *	4/2009	Wang et al.	704/233

* cited by examiner

Primary Examiner — Abul Azad
(74) *Attorney, Agent, or Firm* — Kokka & Backus, PC

(57) **ABSTRACT**

Acoustic Voice Activity Detection (AVAD) methods and systems are described. The AVAD methods and systems, including corresponding algorithms or programs, use microphones to generate virtual directional microphones which have very similar noise responses and very dissimilar speech responses. The ratio of the energies of the virtual microphones is then calculated over a given window size and the ratio can then be used with a variety of methods to generate a VAD signal. The virtual microphones can be constructed using either an adaptive or a fixed filter.

44 Claims, 35 Drawing Sheets

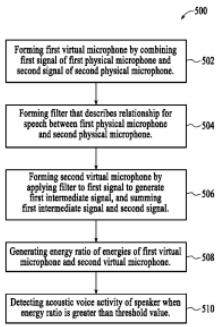

Meta Platforms, Inc. - Ex. 1021
Meta Platforms, Inc. v. Jawbone Innovations, LLC
IPR2023-01084, Page 5 of 61

Challenged Patents – ’213 Patent

14. A device comprising:

a first physical microphone generating a first signal;

a second physical microphone generating a second signal; and

a processing component coupled to the first physical microphone and the second physical microphone, the processing component forming a first virtual microphone, the processing component forming a filter that describes a relationship for speech between the first physical microphone and the second physical microphone, the processing component forming a second virtual microphone by applying the filter to the first signal to generate a first intermediate signal, and summing the first intermediate signal and the second signal, the processing component detecting acoustic voice activity of a speaker when an energy ratio of energies of the first virtual microphone and the second virtual microphone is greater than a threshold value.

42. A device comprising:

a headset including at least one loudspeaker, wherein the headset attaches to a region of a human head;

a microphone array connected to the headset, the microphone array including a first physical microphone outputting a first signal and a second physical microphone outputting a second signal; and

a processing component coupled to the first physical microphone and the second physical microphone, the processing component forming a first virtual microphone, the processing component forming a filter that describes a relationship for speech between the first physical microphone and the second physical microphone, the processing component forming a second virtual microphone by applying the filter to the first signal to generate a first intermediate signal, and summing the first intermediate signal and the second signal, the processing component detecting acoustic voice activity of a speaker when an energy ratio of energies of the first virtual microphone and the second virtual microphone is greater than a threshold value.

’213 Patent, cl. 14, 42.

Meta Platforms, Inc. - Ex. 1021
Meta Platforms, Inc. v. Jawbone Innovations, LLC
IPR2023-01084, Page 6 of 61

Challenged Patents – ’611 Patent

1. A method comprising:

forming a first virtual microphone by combining a first signal of a first physical microphone and a second signal of a second physical microphone;

forming a filter that describes a relationship for speech between the first physical microphone and the second physical microphone;

forming a second virtual microphone by applying the filter to the first signal to generate a first intermediate signal, and summing the first intermediate signal and the second signal;

generating an energy ratio of energies of the first virtual microphone and the second virtual microphone; and

detecting acoustic voice activity of a speaker when the energy ratio is greater than a threshold value.

’611 Patent, cl. 1.

Meta Platforms, Inc. - Ex. 1021
Meta Platforms, Inc. v. Jawbone Innovations, LLC
IPR2023-01084, Page 7 of 61

Challenged Patents – Claimed Embodiments

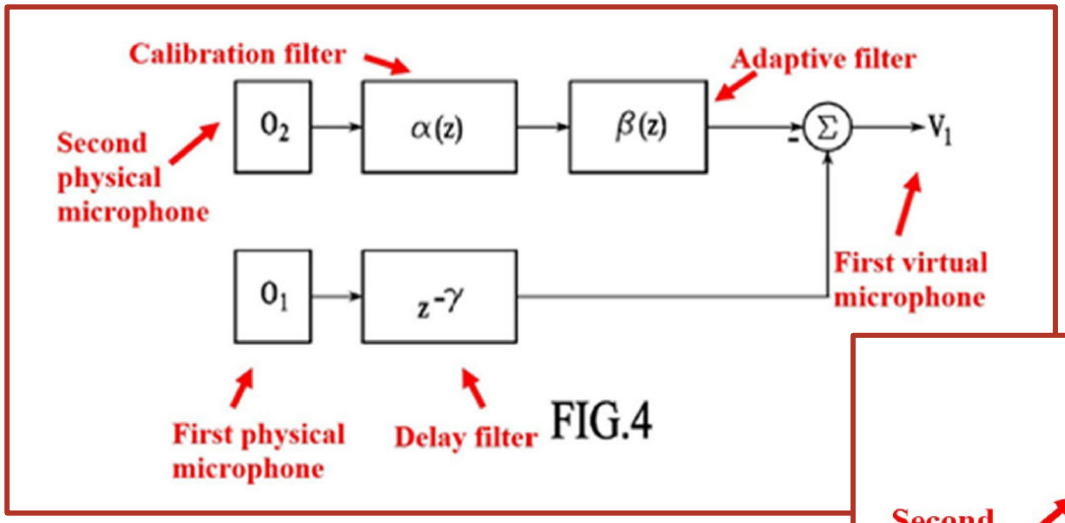

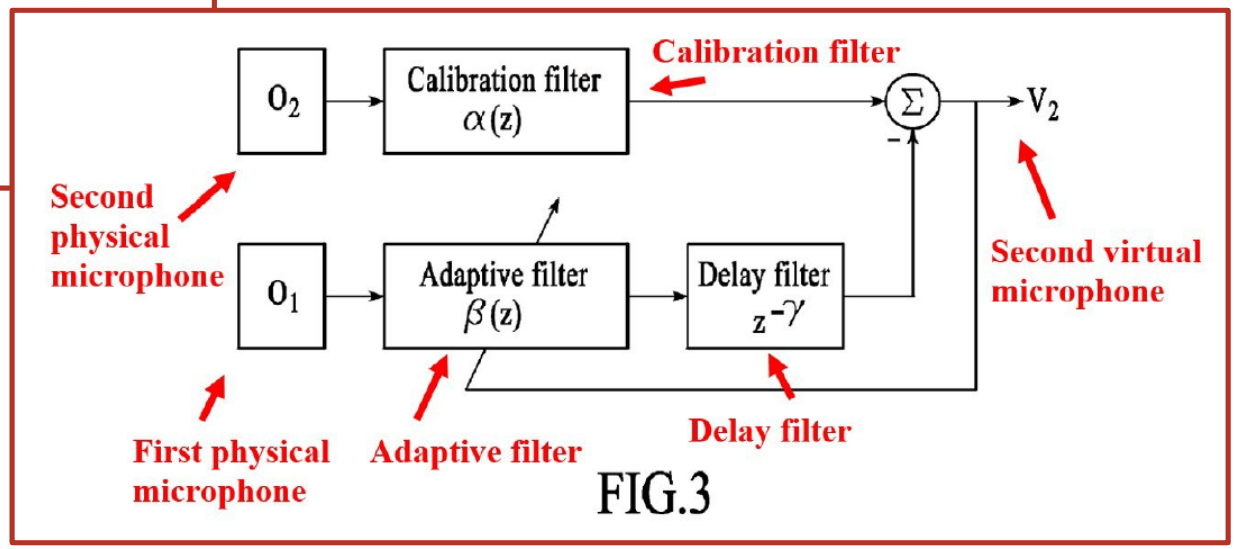

'213 and '611 Patents at Figs. 3, 4 (annotated); 1084 Pet. 5; 1128 Pet. 5-6; 1084 Ex. 1003 ¶¶46-47; 1128 Ex. 1003 ¶¶46-47

Challenged Patents

14. A device comprising:
a first physical microphone generating a first signal;
a second physical microphone generating a second signal; and
a processing component coupled to the first physical microphone and the second physical microphone, the processing component forming a first virtual microphone, the processing component forming a filter that describes a relationship for speech between the first physical microphone and the second physical microphone, the processing component forming a second virtual microphone by applying the filter to the first signal to generate a first intermediate signal, and summing the first intermediate signal and the second signal, the processing component detecting acoustic voice activity of a speaker when an energy ratio of energies of the first virtual microphone and the second virtual microphone is greater than a threshold value.

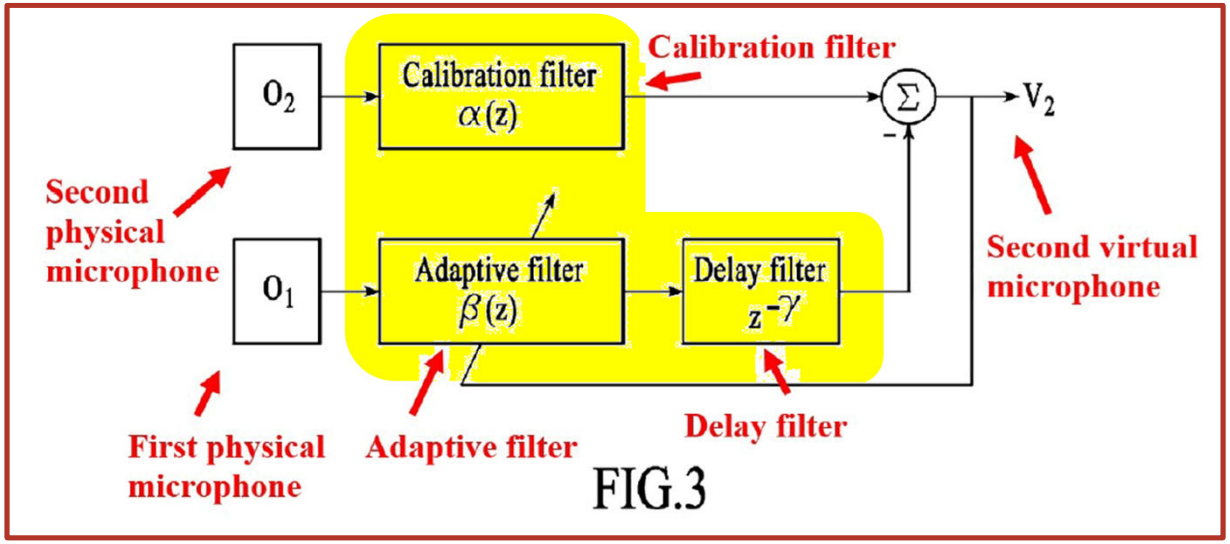

'213 and '611 Patents at Fig. 3 (annotated); 1084 Pet. 5; 1128 Pet. 5-6; 1084 Ex. 1003 ¶47; 1128 Ex. 1003 ¶47; 1084 Reply 1, 9-12; 1128 Reply 1, 9-12

'213 Patent, cl. 14; *see also* '213 Patent, cl. 42, '611 Patent, cl. 1

Overview

Claim Construction

- Claimed “filter” can be a “delay”

Prior Art

- Independent Claims
  - Avendano meets the claimed “filter”
  - Avendano + Visser render obvious the claimed “filter”
- Dependent Claims
  - Prior Art Applies a Calibration (Dep. Claim 15 of 213, Dep. Claim 5 of 611)
  - Prior Art Performs Compensation (Dep. Claim 16 of 213, Dep. Claim 6 of 611)
  - Prior Art Applies a Delay (Dep. Claim 17 of 213, Dep. Claim 7 of 611)
  - Prior Art Applies Filter To Both Signals (Dep. Claim 19 of 213, Dep. Claim 9 of 611)
  - Prior Art Applies the Calibration (Dep. Claim 27 of 213, Dep. Claim 17 of 611)

Meta Platforms, Inc. - Ex. 1021
Meta Platforms, Inc. v. Jawbone Innovations, LLC
IPR2023-01084, Page 10 of 61

Claim Construction

Meta Platforms, Inc. - Ex. 1021
Meta Platforms, Inc. v. Jawbone Innovations, LLC
IPR2023-01084, Page 11 of 61

Challenged Patent

Disputed claim term: “a filter that describes a relationship for speech between the first physical microphone and the second physical microphone”

Meta’s Construction	PO’s Previous Construction	PO’s Current Construction
Plain and ordinary meaning	“A filter that alters the magnitude of a signal based on the relative responses to speech of the first and second physical microphones”	“A filter that alters a signal based on the non-temporal components of relative responses to speech of the first and second physical microphones”

*Main dispute is whether the claimed “filter” can be a delay

1084 Reply 13; 1128 Reply 13

Claim Construction

Claimed “filter” includes a delay for 3 independent reasons

1. Dependent claims confirm “filter” includes a delay
2. Even under PO’s construction, the β “filter” simplifies a delay
3. No disavowal of the patent’s “delay filter”
4. PO’s construction is unsupported

1084 Reply 2-14; 1128 Reply 2-14

DEMONSTRATIVE EXHIBIT – NOT EVIDENCE

"Filter" includes a Delay

Dependent claims confirm "filter" includes a delay

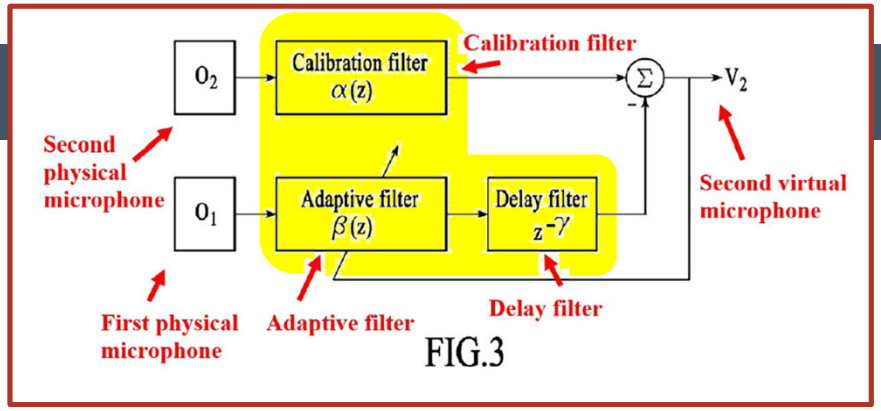

FIG.3

'213 and '611 Patents at Figs. 3, 4 (annotated); 1084 Pet. 5; 1128 Pet. 5-6; 1084 Reply 1, 9-12; 1128 Reply 1, 9-12

14. A device comprising:
a first physical microphone generating a first signal;
a second physical microphone generating a second signal; and
a processing component coupled to the first physical microphone and the second physical microphone, the processing component forming a first virtual microphone, the processing component forming a filter that describes a relationship for speech between the first physical microphone and the second physical microphone, the processing component forming a second virtual microphone by applying the filter to the first signal to generate a first intermediate signal, and summing the first intermediate signal and the second signal, the processing component detecting acoustic voice activity of a speaker when an energy ratio of energies of the first virtual microphone and the second virtual microphone is greater than a threshold value.

15. The device of claim **14**, comprising applying a calibration to at least one of the first signal and the second signal.

16. The device of claim **15**, wherein the calibration compensates a second response of the second physical microphone so that the second response is equivalent to a first response of the first physical microphone.

17. The device of claim **15**, comprising applying a delay to the first intermediate signal.

18. The device of claim **17**, wherein the delay is proportional to a time difference between arrival of the speech at the second physical microphone and arrival of the speech at the first physical microphone.

'213 Patent, cl. 14-18; *see* '611 Patent, cl. 1, 5-8
1084 Reply 14-15; 1128 Reply 14-15.

"Filter" includes a Delay

Dependent claims confirm "filter" includes a delay

14. A device comprising:
a first physical microphone generating a first signal;
a second physical microphone generating a second signal; and
a processing component coupled to the first physical microphone and the second physical microphone, the processing component forming a first virtual microphone, the processing component forming a filter that describes a relationship for speech between the first physical microphone and the second physical microphone, the processing component forming a second virtual microphone by applying the filter to the first signal to generate a first intermediate signal, and summing the first intermediate signal and the second signal, the processing component detecting acoustic voice activity of a speaker when an energy ratio of energies of the first virtual microphone and the second virtual microphone is greater than a threshold value.

'213 Patent, cl. 14, 19-23; *see* '611 Patent, cl. 1, 9-13;
1084 Reply 14-15; 1128 Reply 14-15.

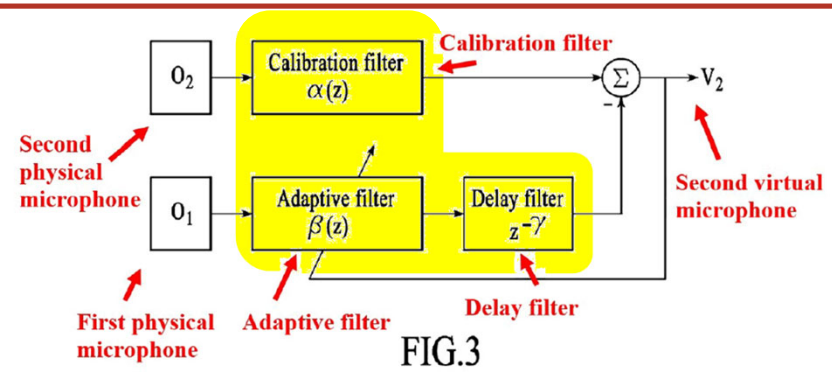

FIG.3

'213 and '611 Patents at Figs. 3, 4 (annotated); 1084 Pet. 5;
1128 Pet. 5-6; 1084 Reply 1, 9-12; 1128 Reply 1, 9-12

19. The device of claim **18**, wherein the forming of the first virtual microphone comprises applying the filter to the second signal.
20. The device of claim **19**, wherein the forming of the first virtual microphone comprises applying the calibration to the second signal.
21. The device of claim **20**, wherein the forming of the first virtual microphone comprises applying the delay to the first signal.
22. The device of claim **21**, wherein the forming of the first virtual microphone by the combining comprises subtracting the second signal from the first signal.
23. The device of claim **22**, wherein the filter is an adaptive filter.

"Filter" includes a Delay

Dependent claims confirm "filter" includes a delay

14. A device comprising:
a first physical microphone generating a first signal;
a second physical microphone generating a second signal; and
a processing component coupled to the first physical microphone and the second physical microphone, the processing component forming a first virtual microphone, the processing component forming a filter that describes a relationship for speech between the first physical microphone and the second physical microphone, the processing component forming a second virtual microphone by applying the filter to the first signal to generate a first intermediate signal, and summing the first intermediate signal and the second signal, the processing component detecting acoustic voice activity of a speaker when an energy ratio of energies of the first virtual microphone and the second virtual microphone is greater than a threshold value.

'213 Patent, cl. 14, 25-27, *see* '611 Patent, cl. 1, 15-17;
1084 Reply 14-15; 1128 Reply 14-15.

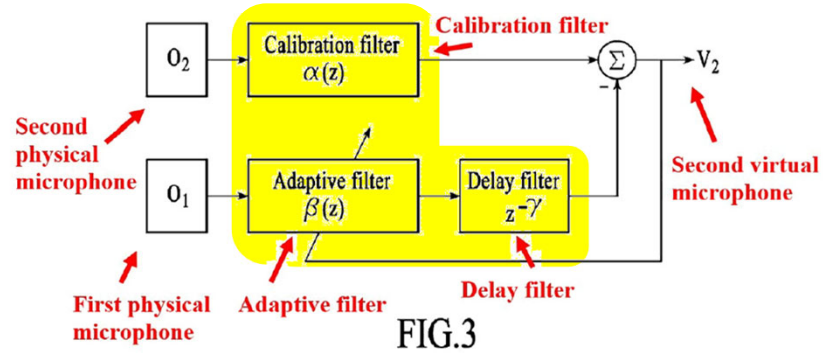

FIG.3

'213 and '611 Patents at Figs. 3, 4 (annotated); 1084 Pet. 5;
1128 Pet. 5-6; 1084 Reply 1, 9-12; 1128 Reply 1, 9-12

25. The device of claim **23**, wherein the adapting comprises applying a least-mean squares process.

26. The device of claim **23**, comprising generating coefficients of the filter during a period when only speech is being received by the first physical microphone and the second physical microphone.

27. The device of claim **23**, wherein the forming of the filter comprises:
generating a first quantity by applying a calibration to the second signal;
generating a second quantity by applying the delay to the first signal;
forming the filter as a ratio of the first quantity to the second quantity.

"Filter" includes a Delay

Even under PO's construction, the β "filter" simplifies a delay

35. Ideally the microphones O_1 and O_2 are assumed to be calibrated so that "their response to a source located the same distance away was identical for both amplitude and phase." Ex 1001, 28:65-67. However, this is not always feasible in practice and the calibration filter α(z) can be determined using adaptive algorithms, for example, so that in the presence of speech only signals (with no or low levels of noise) the microphone signals O_1 and O_2 satisfy the relationship $O_1(z) = \alpha(z)\, O_2(z)$. Ex. 1001 28:64-29:31.

36. After the calibration filter α(z) is determined, the filter β(z) can be determined, either from the geometry of microphones relative to the target speech source, or, in the claimed embodiments, by using an adaptive filter algorithm to satisfy the relationship:

$$\tilde{\beta}(z) = \frac{\alpha(z)O_2(z)}{z^{-\gamma}O_1(z)}$$

Ex. 1001 5:53-6:11.

$$\boxed{\tilde{\beta}(z) = \frac{\alpha(z)O_2(z)}{z^{-\gamma}O_1(z)}}$$

- Begin with the second equation for the β filter;

$$= \frac{O_1(z)}{z^{-\gamma}O_1(z)}$$

- Based on the first equation, substitute $O_1(z)$ for the numerator;

$$= \frac{\cancel{O_1(z)}}{z^{-\gamma}\cancel{O_1(z)}}$$

- $O_1(z)$ appears in both the numerator and denominator, and therefore cancels out; and

$$= \frac{1}{z^{-\gamma}} = z^{\gamma}$$

- The β filter simplifies to a mere delay.

1084 Reply 4-6; 1128 Reply 4-6

1084 Ex. 2005, Sayeed Decl. ¶¶35-36 (citing '213 Patent 28:64-29:31, 5:53-6:11); *see also* 1128 Ex. 2005, Sayeed Decl. ¶¶35-36 (citing '611 Patent 28:61-29:27; 6:1-11)

“Filter” includes a Delay

No disavowal of the patent’s “delay filter”

The NAVSAD and PSAD systems include an array algorithm for speech detection **that uses the difference in frequency content between two microphones to calculate a *relationship between the signals of the two microphones.*** This is in contrast to conventional arrays that attempt to use the time/phase difference of each microphone to remove the noise outside of an “area of sensitivity”. ***The methods described herein provide a significant advantage, as they do not require a specific orientation of the array with respect to the signal.***

’213 Patent, 11:20-29 (cited in 1084 POR 15) (emphasis added by PO);
see also 1128 POR 15 (citing ’611 Patent 11:18-27)

“Filter” includes a Delay

No disavowal of the patent’s “delay filter”

"To disavow claim scope, the specification must contain 'expressions of manifest exclusion or restriction, representing a clear disavowal of claim scope.’”

Cont’l Circuits LLC v. Intel Corp., 915 F.3d 788, 797 (Fed. Cir. 2019)

1084 Reply 7-9; 1128 Reply 7-9

“Filter” includes a Delay

No disavowal of the patent’s “delay filter”

“[A] patentee will only be bound to a ‘disavowal [that was] both clear and unmistakable.’ Thus, where ‘the alleged disavowal is ambiguous, or even amendable to multiple reasonable interpretations, we have declined to find prosecution disclaimer.”

CUPP Computing AS v. Trend Micro Inc., 53 F.4th 1376, 1382 (Fed. Cir. 2022) (citations omitted)

1084 Reply 7-9; 1128 Reply 7-9

“Filter” includes a Delay

No disavowal of the patent’s “delay filter”

“Disavowal…is an exacting standard under which it must be established that the patentee demonstrated an intent to deviate from the ordinary and accustomed meaning of a claim term through expressions of manifest exclusion or restriction, representing a clear disavowal of claim scope.”

Intellectual Ventures I LLC v. T-Mobile USA, Inc., 902 F.3d 1372, 1378-79 (Fed. Cir. 2018) (internal quotes and citations omitted)

1084 Reply 7-9; 1128 Reply 7-9

Meta Platforms, Inc. - Ex. 1021
Meta Platforms, Inc. v. Jawbone Innovations, LLC
IPR2023-01084, Page 21 of 61

“Filter” includes a Delay

No disavowal of the patent’s “delay filter”

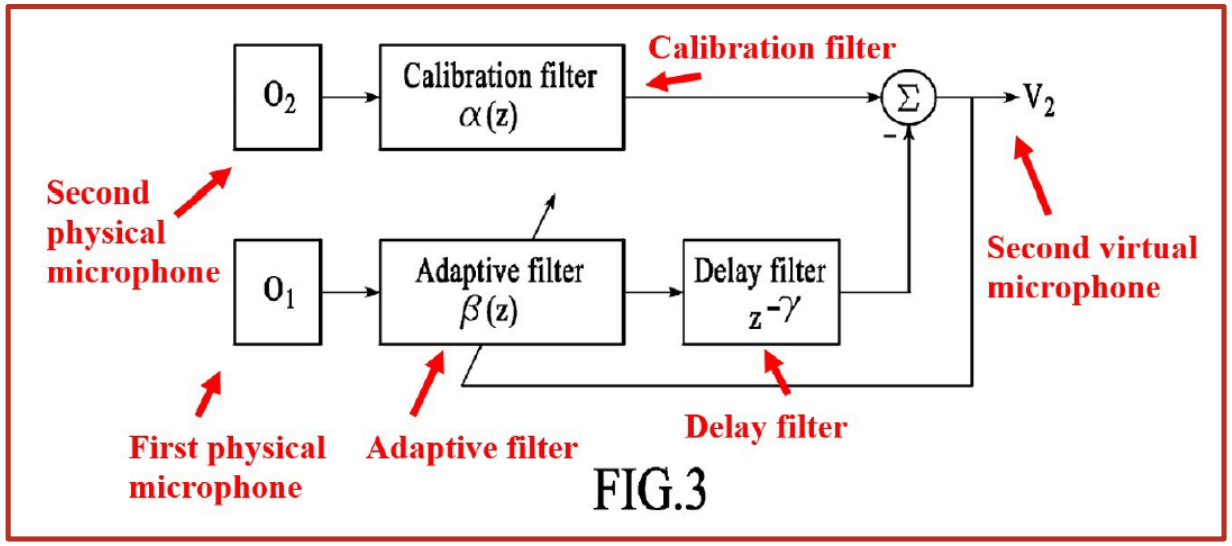

’213 and ’611 Patents at Fig. 3 (annotated); *see* 1084 Pet. 5; 1128 Pet. 5-6; 1084 Ex. 1003 ¶47; 1128 Ex. 1003 ¶47

“Filter” includes a Delay

PO’s construction is unsupported

PO’s Current Construction

“A filter that alters a signal based on the non-temporal components of relative responses to speech of the first and second physical microphones”

“Instead of looking to the words themselves, [patent owner] added language without support from the specification or prosecution history, altering otherwise unambiguous claim language, a practice this court has repeatedly rejected.”

Source Vagabond Sys. V. Hydrapak, Inc., 753 F.3d 1291, 1299-300 (Fed. Cir. 2014)

1084 Reply 13-14; 1128 Reply 13-14

Overview

Claim Construction

- Claimed “filter” can be a “delay”

Prior Art

- Independent Claims
  - Avendano meets the claimed “filter”
  - Avendano + Visser render obvious the claimed “filter”
- Dependent Claims
  - Prior Art Applies a Calibration (Dep. Claim 15 of 213, Dep. Claim 5 of 611)
  - Prior Art Performs Compensation (Dep. Claim 16 of 213, Dep. Claim 6 of 611)
  - Prior Art Applies a Delay (Dep. Claim 17 of 213, Dep. Claim 7 of 611)
  - Prior Art Applies Filter To Both Signals (Dep. Claim 19 of 213, Dep. Claim 9 of 611)
  - Prior Art Applies the Calibration (Dep. Claim 27 of 213, Dep. Claim 17 of 611)

Meta Platforms, Inc. - Ex. 1021
Meta Platforms, Inc. v. Jawbone Innovations, LLC
IPR2023-01084, Page 24 of 61

Asserted Prior Art

Meta Platforms, Inc. - Ex. 1021
Meta Platforms, Inc. v. Jawbone Innovations, LLC
IPR2023-01084, Page 25 of 61

Avendano Overview

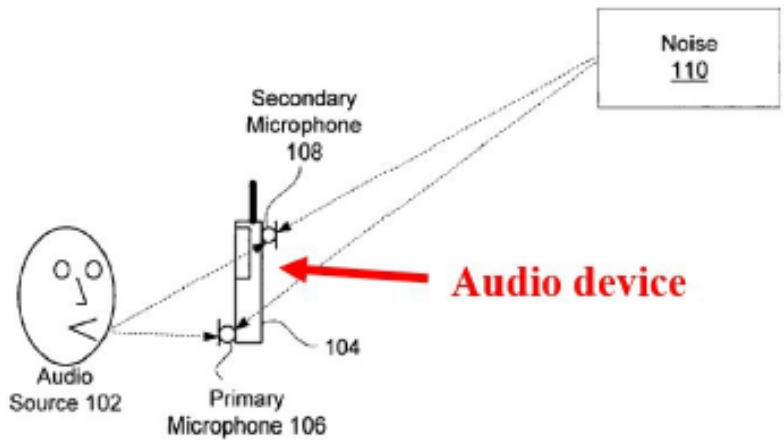

FIG. 1a

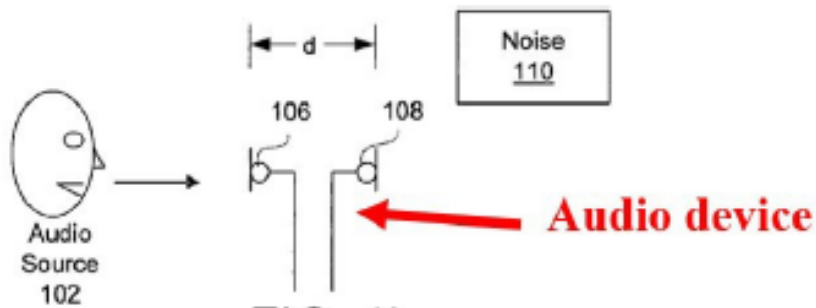

FIG. 1b

Avendano Ex. 1005, Figs. 1a, 1b (annotated);
1084 Pet. 7-8; 1128 Pet. 8

Avendano Overview

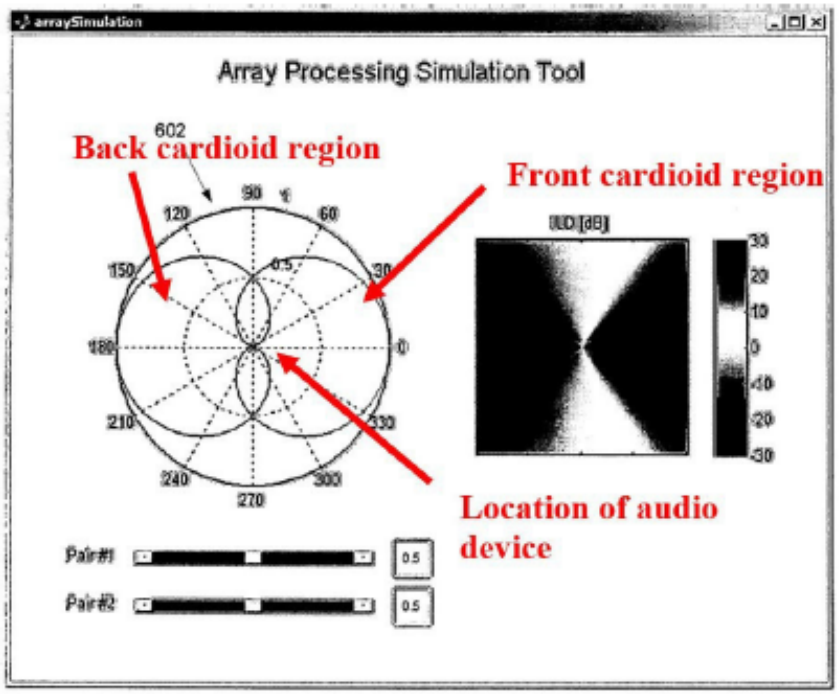

FIG. 6

Avendano Ex. 1005, Fig. 6 (annotated);
1084 Pet. 9; 1128 Pet. 10

Avendano Overview

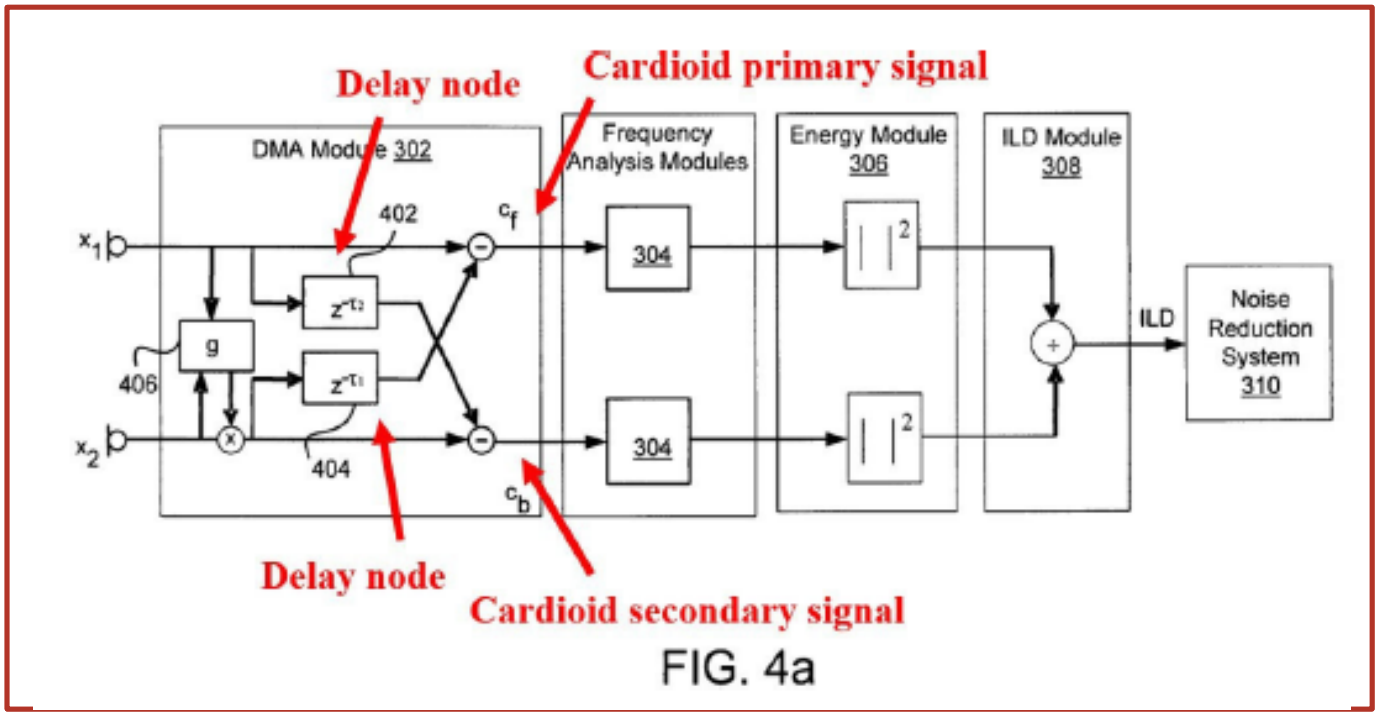

FIG. 4a

Avendano Ex. 1005, Fig. 4a (annotated);
1084 Pet. 10; 1128 Pet. 11.

Avendano Overview

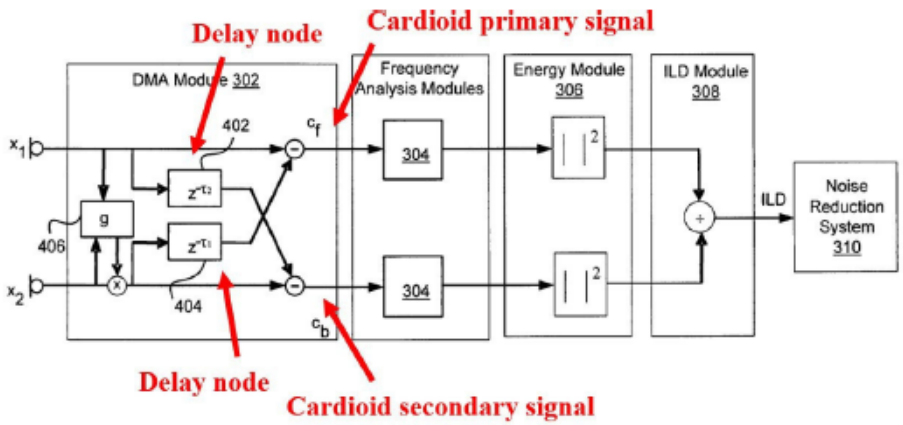

FIG. 4a

$$ILD(t,\omega) = \frac{\int |C_f(t',\omega)|^2 \, dt'}{\int_{frame} |C_b(t',\omega)|^2 \, dt'}.$$

Energy level of C_f

Energy level of C_b

Ex. 1005, 6:16

$$\lambda_1(t,w) = \begin{cases} \approx 0 & if \quad ILD(t,w) < threshold \\ \approx 1 & if \quad ILD(t,w) > threshold \end{cases}$$

Ex. 1005, 6:61

Avendano Ex. 1005, Fig. 4a (annotated), 6:16, 6:61; 1084 Pet. 10-11; 1128 Pet. 11-12

Visser Overview

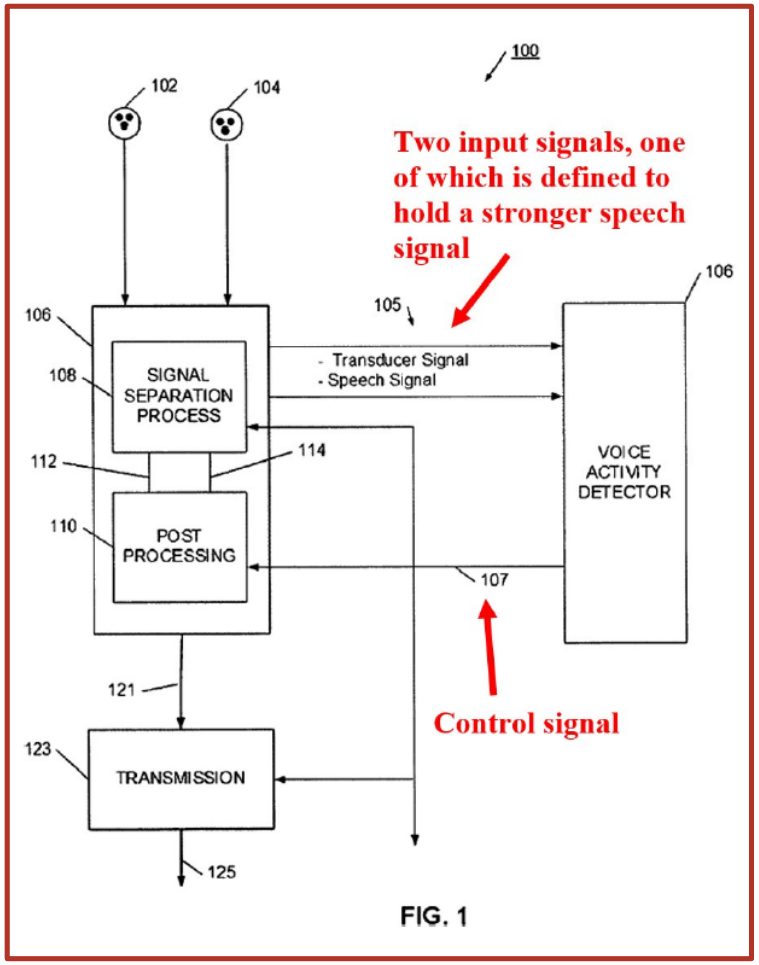

Visser Ex. 1006, Fig. 1 (annotated);
1084 Pet. 12; 1128 Pet. 14

Visser Overview

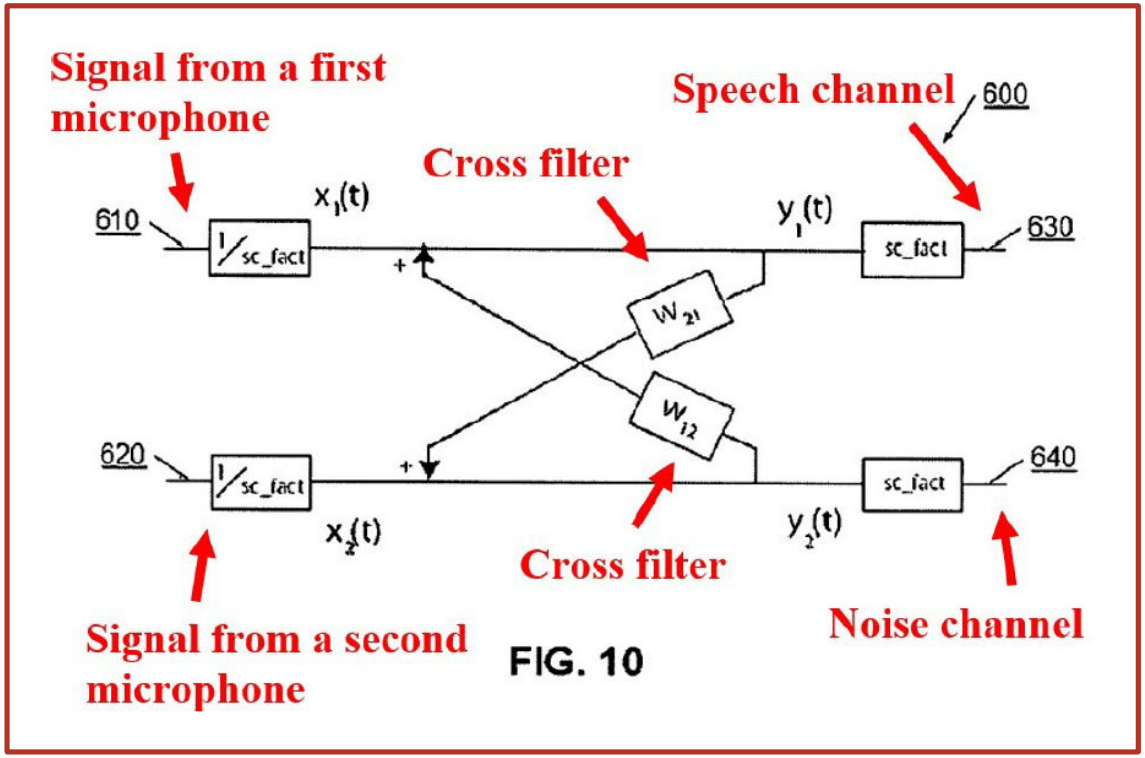

Visser Ex. 1006, Fig. 10 (annotated);
1084 Pet. 14; 1128 Pet. 15

Avendano + Visser Overview

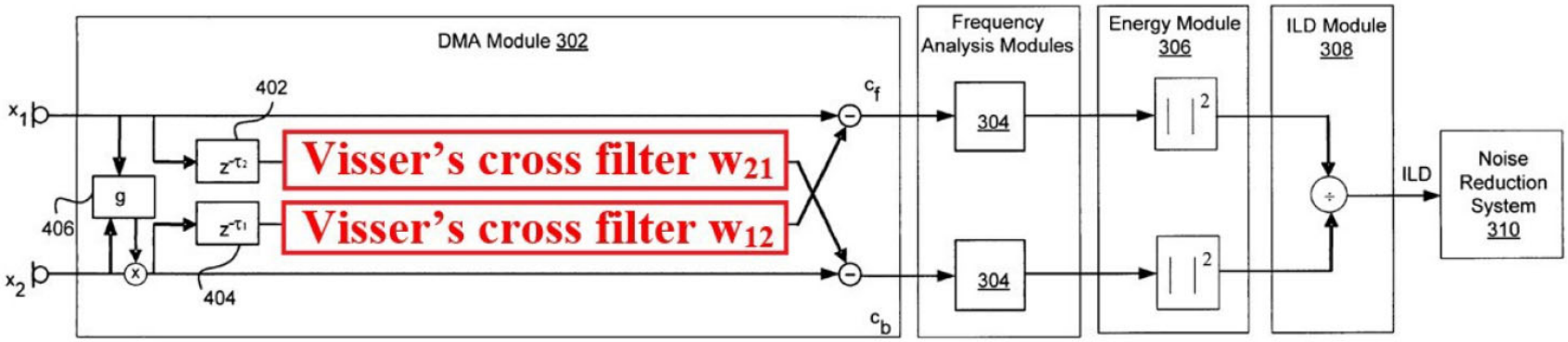

FIG. 4a

Avendano Ex. 1005, Fig. 4a (modified);
1084 Pet. 20; 1128 Pet. 22

Avendano + Visser + Bisgaard Overview

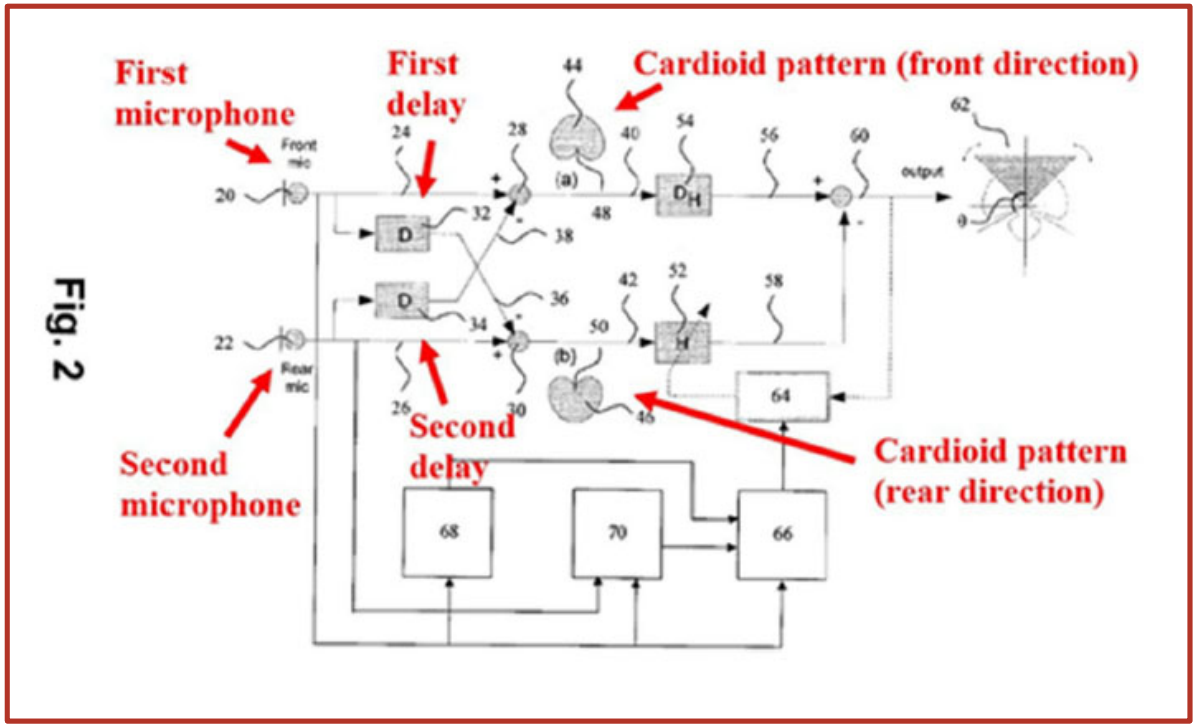

Bisgaard Ex. 1010, Fig. 2 (annotated);
1084 Pet. 42; 1128 Pet. 42

Meta Platforms, Inc. - Ex. 1021
Meta Platforms, Inc. v. Jawbone Innovations, LLC
IPR2023-01084, Page 33 of 61

Avendano + Visser + Bisgaard + Hou Overview

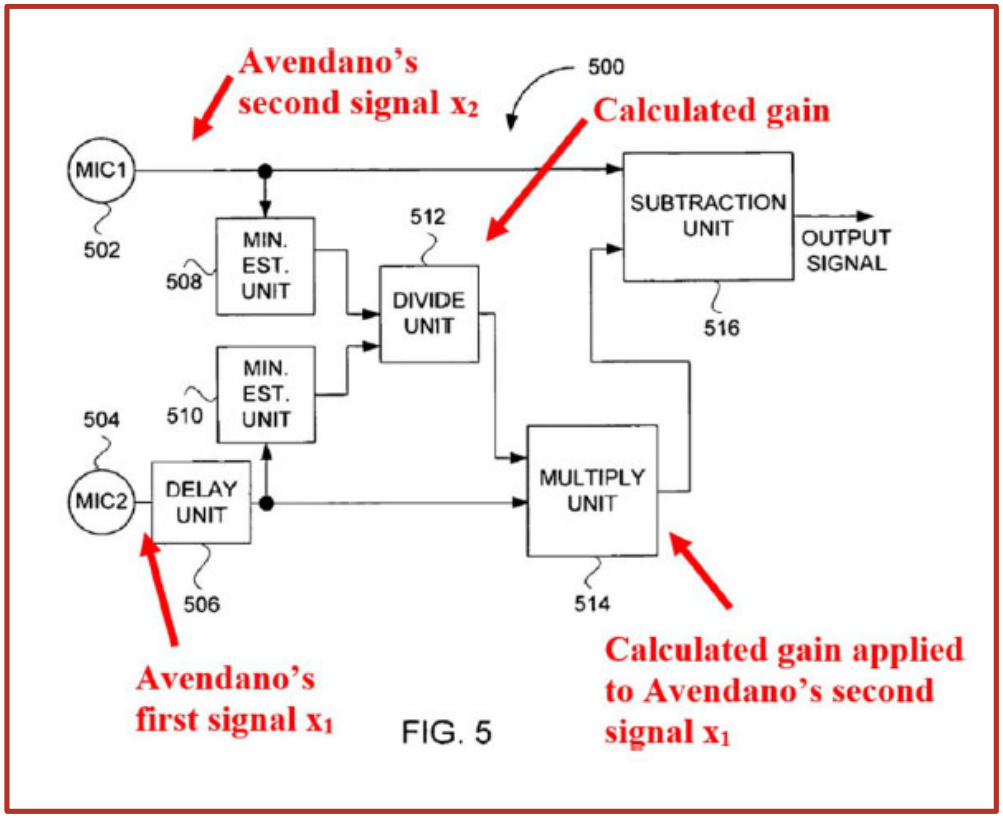

Hou Ex. 1008, Fig. 5 (annotated);
1084 Pet. 58; 1128 Pet. 63

Meta Platforms, Inc. - Ex. 1021
Meta Platforms, Inc. v. Jawbone Innovations, LLC
IPR2023-01084, Page 34 of 61

Overview

Claim Construction

- Claimed “filter” can be a “delay”

Prior Art

- Independent Claims
  - Avendano meets the claimed “filter”
  - Avendano + Visser render obvious the claimed “filter”
- Dependent Claims
  - Prior Art Applies a Calibration (Dep. Claim 15 of 213, Dep. Claim 5 of 611)
  - Prior Art Performs Compensation (Dep. Claim 16 of 213, Dep. Claim 6 of 611)
  - Prior Art Applies a Delay (Dep. Claim 17 of 213, Dep. Claim 7 of 611)
  - Prior Art Applies Filter To Both Signals (Dep. Claim 19 of 213, Dep. Claim 9 of 611)
  - Prior Art Applies the Calibration (Dep. Claim 27 of 213, Dep. Claim 17 of 611)

Avendano Meets The Claimed "Filter" (Ind. Claims)

No dispute that under the plain and ordinary meaning of "filter," Avendano's delay node 402 meets the claimed "filter."

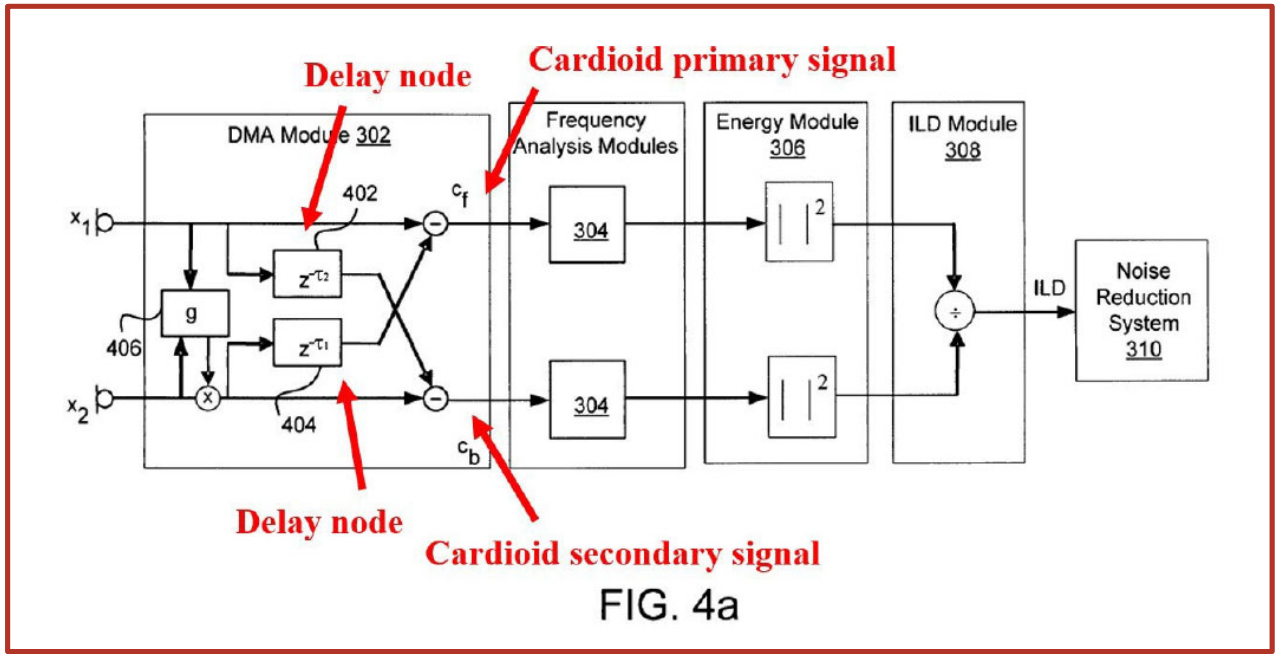

FIG. 4a

Avendano Ex. 1005, Fig. 4a (annotated);
1084 Pet. 10; 1084 Pet. 11; 1084 Ex. 1003 ¶60; 1128 Ex. 1003 ¶60

1084 Reply 15-16; 1128 Reply 15-16; *see* 1084 Pet. 25-27; 1128 Pet. 26-27; 1084 Ex. 1003 ¶¶137-142; 1128 Ex. 1003 ¶¶133-138

Avendano Meets The Claimed "Filter" (Ind. Claims)

Even under PO's construction, Avendano's gain "g" meets the claimed "filter," when the β filter is a simple gain. PO concedes Avendano's gain "is simply a gain that matches signal strengths."

$$\beta(z) = \frac{d_1}{d_2} = \frac{d_1}{d_1 + d}$$

'213 Patent, 5:52-59; ''611 Patent, 5:52-59; 1084 POR 17; 1128 POR 17

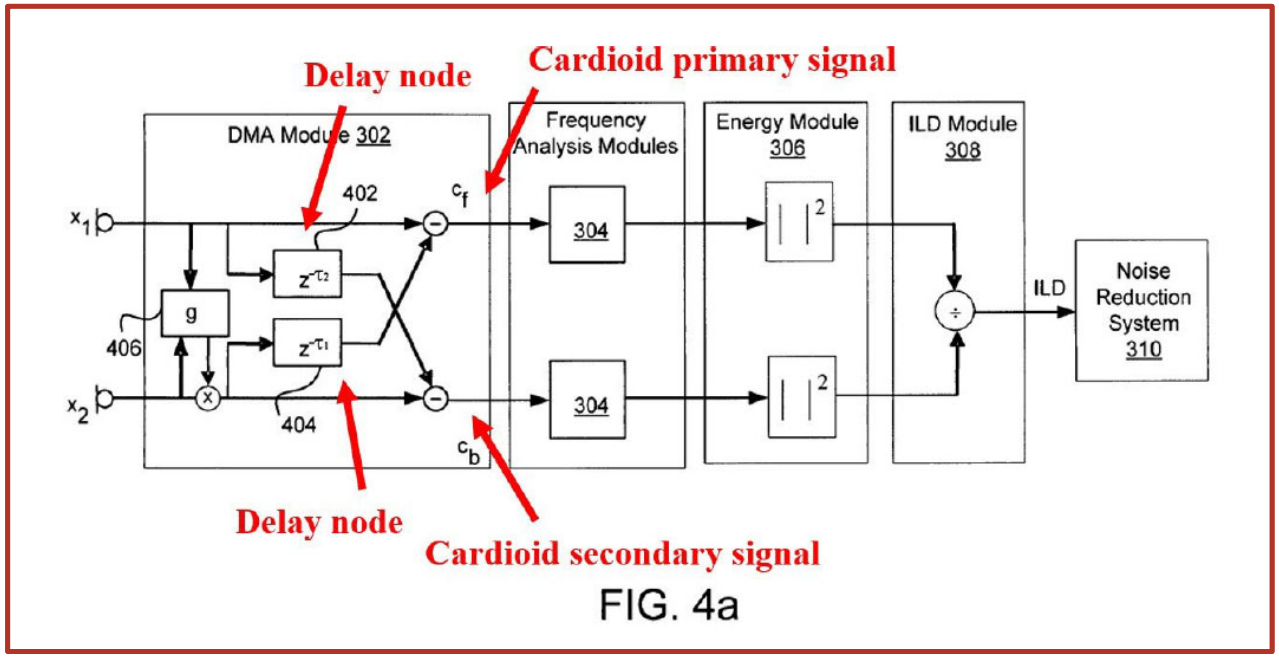

FIG. 4a

Avendano Ex. 1005, Fig. 4a (annotated); 1084 Pet. 10; 1084 Pet. 11; 1084 Ex. 1003 ¶60; 1128 Ex. 1003 ¶60

1084 Reply 15; 1084 POR 26; 1128 Reply 15; 1128 POR 26

Overview

Claim Construction

- Claimed “filter” can be a “delay”

Prior Art

- Independent Claims
  - Avendano meets the claimed “filter”
  - Avendano + Visser render obvious the claimed “filter”
- Dependent Claims
  - Prior Art Applies a Calibration (Dep. Claim 15 of 213, Dep. Claim 5 of 611)
  - Prior Art Performs Compensation (Dep. Claim 16 of 213, Dep. Claim 6 of 611)
  - Prior Art Applies a Delay (Dep. Claim 17 of 213, Dep. Claim 7 of 611)
  - Prior Art Applies Filter To Both Signals (Dep. Claim 19 of 213, Dep. Claim 9 of 611)
  - Prior Art Applies the Calibration (Dep. Claim 27 of 213, Dep. Claim 17 of 611)

Meta Platforms, Inc. - Ex. 1021
Meta Platforms, Inc. v. Jawbone Innovations, LLC
IPR2023-01084, Page 38 of 61

Avendano and Visser Render Obvious The Claimed "Filter" (Ind. Claims)

No "numerous errors" as PO alleges, because combination relies on Visser's cross filters, which are adapted using:

- Visser's VAD; or
- Avendano's VAD

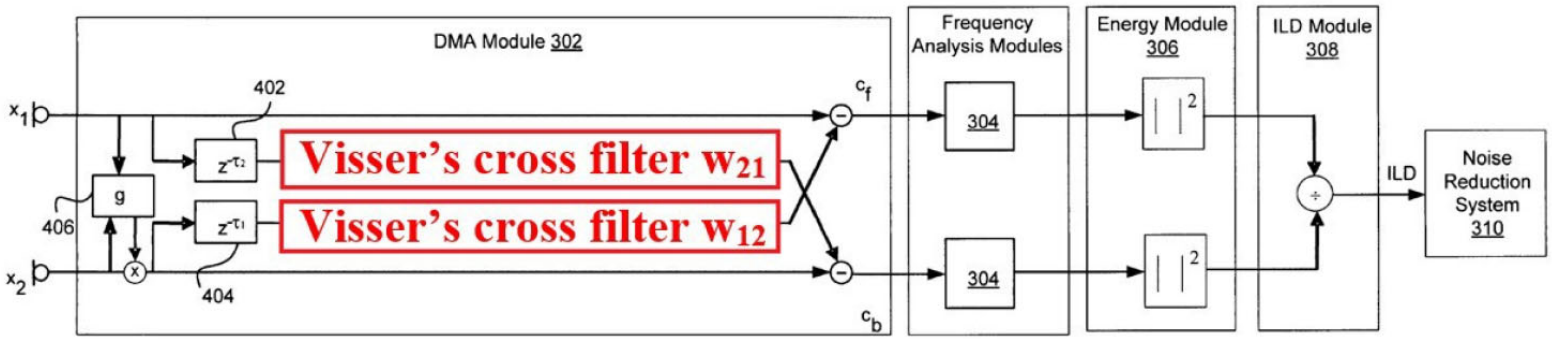

FIG. 4a

Avendano Ex. 1005 Fig. 4a (modified and annotated);
1084 Pet. 20; 1128 Pet. 22; *see* 1084 POR 26; 1128 POR 26

Avendano and Visser Render Obvious The Claimed "Filter" (Ind. Claims)

- Adapt Visser's cross filters using Visser's VAD

Visser determines the presence of speech using principles similar to those taught by Avendano. For example, Visser's "VAD 106" determines the presence of speech based on two processed signals, "with one of the signals defined to hold a stronger speech signal." Section III(B); Ex. 1006, 8:33-35. Specifically, Visser's processed signals include (i) a "speech channel" that "contains predominantly desired signals," and (ii) a "noise channel" that "contains predominantly noise signals" (*e.g.*, generated by "ICA or BSS processing").

Ex. 1006, 17:36-44.

Accordingly, a POSITA would have been motivated to incorporate Visser's "ICA process" into Avendano's system to further enhance the differences in speech content in Avendano's two processed signals, such that speech is detected with a greater degree of accuracy, "even in a changing acoustic environment." Ex. 1003, ¶112.

1084 Pet. 17; *see also* 1128 Pet. 18-19

Avendano and Visser Render Obvious The Claimed "Filter" (Ind. Claims)

- Adapt Visser's cross filters using Avendano's VAD

For example, Avendano determines the presence of speech based on a comparison between (i) a first processed signal ("cardioid primary signal (C_f)" directed to the front) and (ii) a second processed signal ("cardioid secondary signal (C_b)" directed to the back). Section III(A); Ex. 1005, 4:47-7:9. This comparison is particularly suitable for determining presence of speech, as the source of speech ("audio source 102") is positioned on a front side of "audio device 104," and thus "cardioid primary signal (C_f)" would have a greater response to speech than "cardioid secondary signal (C_b)." Ex. 1003, ¶¶105-106. Specifically, as taught by Avendano, the differences in the "levels" between the two processed signals is represented by a ratio (ILD) between energy levels of these two processed signals. Ex. 1005, 5:49-6:34, 6:58-7:3. If the ratio is sufficiently high (*e.g.*, when the energy level of front-facing "cardioid primary signal C_f" is sufficiently higher than that of back-facing "cardioid secondary signal C_b"), this is indicative of a presence of speech activity. *Id.*, 6:58-7:3.

1084 Pet. 15-16; *see also* 1128 Pet. 17

Overview

Claim Construction

- Claimed “filter” can be a “delay”

Prior Art

- Independent Claims
  - Avendano meets the claimed “filter”
  - Avendano + Visser render obvious the claimed “filter”
- Dependent Claims
  - Prior Art Applies a Calibration (Dep. Claim 15 of 213, Dep. Claim 5 of 611)
  - Prior Art Performs Compensation (Dep. Claim 16 of 213, Dep. Claim 6 of 611)
  - Prior Art Applies a Delay (Dep. Claim 17 of 213, Dep. Claim 7 of 611)
  - Prior Art Applies Filter To Both Signals (Dep. Claim 19 of 213, Dep. Claim 9 of 611)
  - Prior Art Applies the Calibration (Dep. Claim 27 of 213, Dep. Claim 17 of 611)

Meta Platforms, Inc. - Ex. 1021
Meta Platforms, Inc. v. Jawbone Innovations, LLC
IPR2023-01084, Page 42 of 61

Avendano Applies a Calibration (Dep. Cl. 15 of 213; Dep. Cl. 5 of 611)

14. A device comprising:
a first physical microphone generating a first signal;
a second physical microphone generating a second signal; and
a processing component coupled to the first physical microphone and the second physical microphone, the processing component forming a first virtual microphone, the processing component forming a filter that describes a relationship for speech between the first physical microphone and the second physical microphone, the processing component forming a second virtual microphone by applying the filter to the first signal to generate a first intermediate signal, and summing the first intermediate signal and the second signal, the processing component detecting acoustic voice activity of a speaker when an energy ratio of energies of the first virtual microphone and the second virtual microphone is greater than a threshold value.

15. The device of claim **14**, comprising applying a calibration to at least one of the first signal and the second signal.

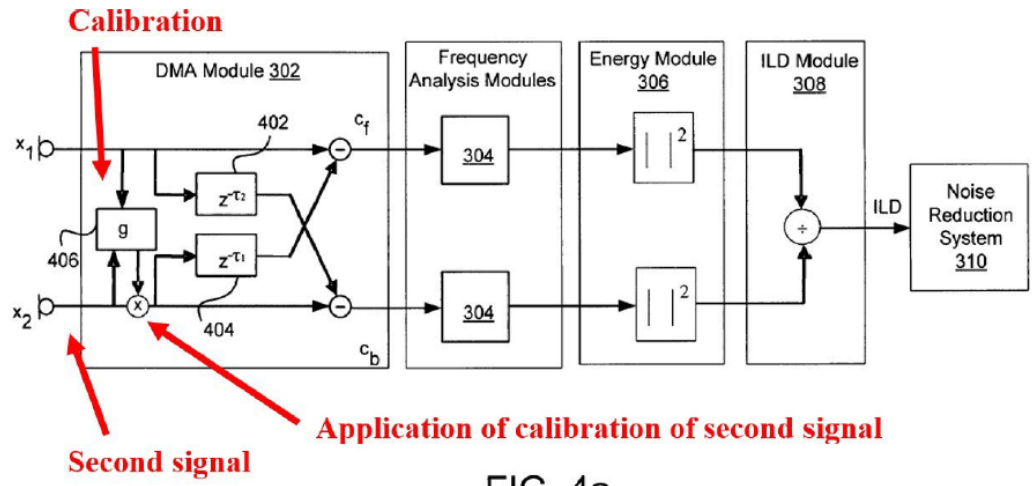

FIG. 4a

Avendano Ex. 1005, Fig. 4a (annotated); 1084 Pet. 35-36; 1128 Pet. 37

’213 Patent, cl. 14, 15; *see also* ’611 Patent, cl. 1, 5

Overview

Claim Construction

- Claimed “filter” can be a “delay”

Prior Art

- Independent Claims
  - Avendano meets the claimed “filter”
  - Avendano + Visser render obvious the claimed “filter”
- Dependent Claims
  - Prior Art Applies a Calibration (Dep. Claim 15 of 213, Dep. Claim 5 of 611)
  - Prior Art Performs Compensation (Dep. Claim 16 of 213, Dep. Claim 6 of 611)
  - Prior Art Applies a Delay (Dep. Claim 17 of 213, Dep. Claim 7 of 611)
  - Prior Art Applies Filter To Both Signals (Dep. Claim 19 of 213, Dep. Claim 9 of 611)
  - Prior Art Applies the Calibration (Dep. Claim 27 of 213, Dep. Claim 17 of 611)

Meta Platforms, Inc. - Ex. 1021
Meta Platforms, Inc. v. Jawbone Innovations, LLC
IPR2023-01084, Page 44 of 61

Avendano Performs Compensation (Dep. Cl. 16 of 213; Dep. Cl. 6 of 611)

14. A device comprising:
a first physical microphone generating a first signal;
a second physical microphone generating a second signal; and
a processing component coupled to the first physical microphone and the second physical microphone, the processing component forming a first virtual microphone, the processing component forming a filter that describes a relationship for speech between the first physical microphone and the second physical microphone, the processing component forming a second virtual microphone by applying the filter to the first signal to generate a first intermediate signal, and summing the first intermediate signal and the second signal, the processing component detecting acoustic voice activity of a speaker when an energy ratio of energies of the first virtual microphone and the second virtual microphone is greater than a threshold value.

15. The device of claim **14**, comprising applying a calibration to at least one of the first signal and the second signal.

16. The device of claim **15**, wherein the calibration compensates a second response of the second physical microphone so that the second response is equivalent to a first response of the first physical microphone.

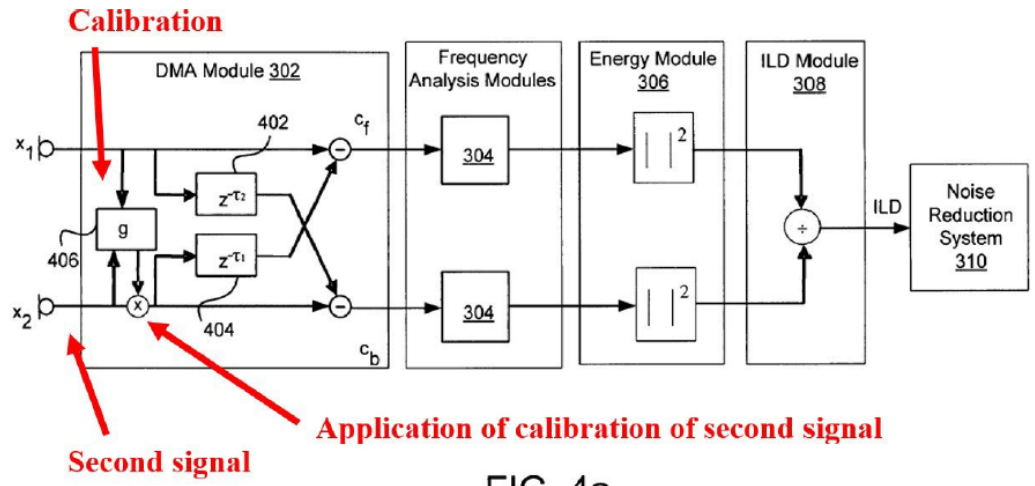

FIG. 4a

Avendano Ex. 1005, Fig. 4a (annotated); 1084 Pet. 35-36; 1128 Pet. 37

'213 Patent, cl. 14-16; *see also* '611 Patent, cl. 1, 5-6

Overview

Claim Construction

- Claimed “filter” can be a “delay”

Prior Art

- Independent Claims
  - Avendano meets the claimed “filter”
  - Avendano + Visser render obvious the claimed “filter”
- Dependent Claims
  - Prior Art Applies a Calibration (Dep. Claim 15 of 213, Dep. Claim 5 of 611)
  - Prior Art Performs Compensation (Dep. Claim 16 of 213, Dep. Claim 6 of 611)
  - Prior Art Applies a Delay (Dep. Claim 17 of 213, Dep. Claim 7 of 611)
  - Prior Art Applies Filter To Both Signals (Dep. Claim 19 of 213, Dep. Claim 9 of 611)
  - Prior Art Applies the Calibration (Dep. Claim 27 of 213, Dep. Claim 17 of 611)

Avendano Applies a Delay (Dep. Cl. 17 of 213; Dep. Cl. 7 of 611)

14. A device comprising:
a first physical microphone generating a first signal;
a second physical microphone generating a second signal; and
a processing component coupled to the first physical microphone and the second physical microphone, the processing component forming a first virtual microphone, the processing component forming a filter that describes a relationship for speech between the first physical microphone and the second physical microphone, the processing component forming a second virtual microphone by applying the filter to the first signal to generate a first intermediate signal, and summing the first intermediate signal and the second signal, the processing component detecting acoustic voice activity of a speaker when an energy ratio of energies of the first virtual microphone and the second virtual microphone is greater than a threshold value.

15. The device of claim **14**, comprising applying a calibration to at least one of the first signal and the second signal.

17. The device of claim **15**, comprising applying a delay to the first intermediate signal.

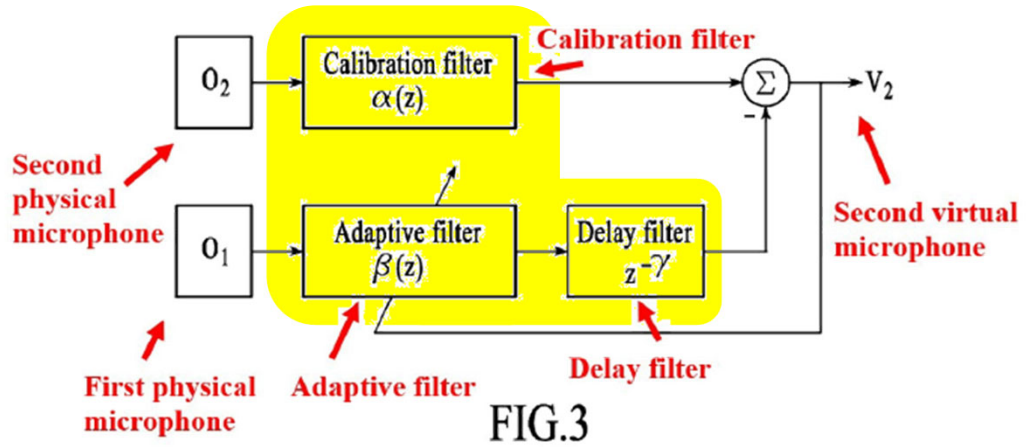

'213 and '611 Patents Fig. 3 (annotated); 1084 Pet. 5; 1128 Pet. 6; 1084 Reply 1, 9-12; 1128 Reply 1, 9-12

'213 Patent, cl. 14, 15, 17 ; *see also* '611 Patent, cl. 1, 5, 7

Meta Platforms, Inc. - Ex. 1021
Meta Platforms, Inc. v. Jawbone Innovations, LLC
IPR2023-01084, Page 47 of 61

Avendano Applies a Delay (Dep. Cl. 17 of 213; Dep. Cl. 7 of 611)

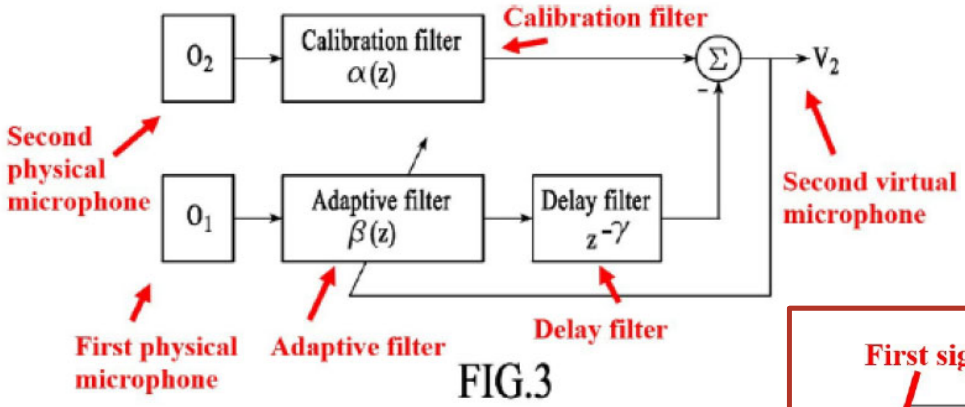

FIG.3

Ex. 1001, FIG. 3

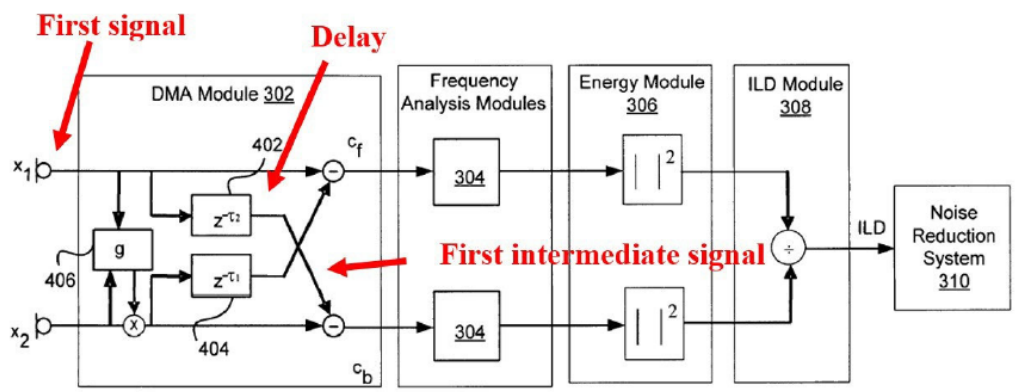

FIG. 4a

'213 and '611 Patents Fig. 3 (annotated);
1084 Pet. 5; 1128 Pet. 6

Avendano Ex. 1005 Fig. 4a (annotated);
1084 Pet. 36; 1128 Pet. 38

Avendano + Visser Applies a Delay (Dep. Cl. 17 of 213; Dep. Cl. 7 of 611)

In a most simplified form, the cross filters W_{21} and W_{12} are gain factors with only one filter coefficient per filter, for example a delay gain factor for the time delay between the output signal and the feedback input signal and an amplitude gain factor for amplifying the input signal. In other forms, the

Visser Ex. 1006, 17:58-62; 1084 Pet. 36-37; 1128 Pet. 38; 1084 Reply 20-21; 1128 Reply 20-21

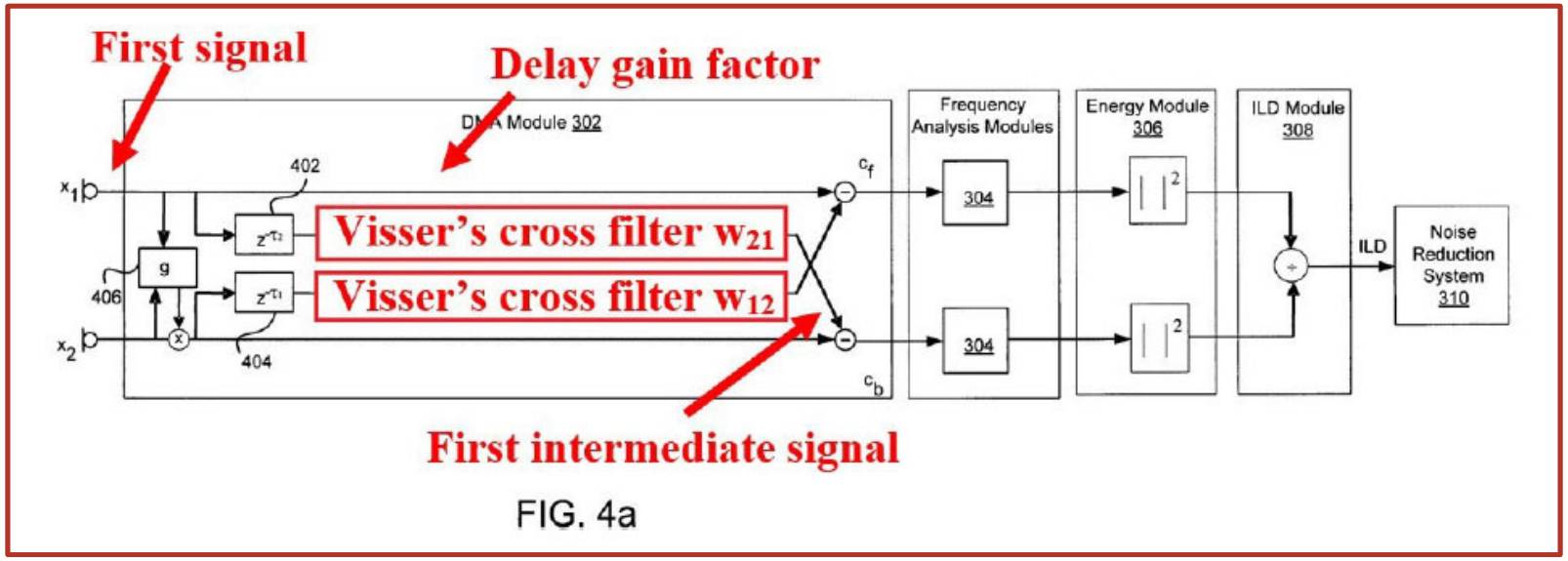

FIG. 4a

Avendano Ex. 1005 Fig. 4a (modified and annotated); 1084 Pet. 37; 1128 Pet. 39

Avendano + Visser Applies a Delay (Dep. Cl. 17 of 213; Dep. Cl. 7 of 611)

2 Q Do the claims encompass a linear filter?
3 MR. COWELL: Objection to form.
4 THE WITNESS: I think a filter is a linear -- I
5 mean, the way the filters are being -- the context of the
6 filter is in this patent, yes, they -- these are linear
7 filters or linear systems, yes.

Ex. 1020, 58:2-7; *see* 1084 Reply 21, 1128 Reply 21

DEMONSTRATIVE EXHIBIT – NOT EVIDENCE

Avendano + Visser Applies a Delay (Dep. Cl. 17 of 213; Dep. Cl. 7 of 611)

22 How are the coefficients of beta used to apply
23 to a signal when the filter is applied to a signal?
24 MR. COWELL: Objection to form.
25 THE WITNESS: Well, again, that could be -- a
1 filter can be implemented in many different ways. So --
2 and so, you know, it's -- so, you know, that could be a
3 really long answer, and I don't know if it's really --
4 BY MS. WANG:
5 Q Okay.
6 A -- relevant here. But, you know, I think it
7 could be applied in the frequency domain by just
8 multiplying the 4EA transform of the signal with the
9 frequency response of the filter, or it could be done in
10 the time domain, as a POSITA would understand, by, you
11 know, convolving -- that's a technical term -- of the
12 input signal with the filter impulse response.

Ex. 1020, 55:22-56:12; *see* 1084 Reply 21; 1128 Reply 21

DEMONSTRATIVE EXHIBIT – NOT EVIDENCE

Overview

Claim Construction

- Claimed “filter” can be a “delay”

Prior Art

- Independent Claims
  - Avendano meets the claimed “filter”
  - Avendano + Visser render obvious the claimed “filter”
- Dependent Claims
  - Prior Art Applies a Calibration (Dep. Claim 15 of 213, Dep. Claim 5 of 611)
  - Prior Art Performs Compensation (Dep. Claim 16 of 213, Dep. Claim 6 of 611)
  - Prior Art Applies a Delay (Dep. Claim 17 of 213, Dep. Claim 7 of 611)
  - Prior Art Applies Filter To Both Signals (Dep. Claim 19 of 213, Dep. Claim 9 of 611)
  - Prior Art Applies the Calibration (Dep. Claim 27 of 213, Dep. Claim 17 of 611)

Avendano + Visser Applies Filter To Both Signals (Dep. Claim 19 of 213, Dep. Claim 9 of 611)

14. A device comprising:
a first physical microphone generating a first signal;
a second physical microphone generating a second signal; and
a processing component coupled to the first physical microphone and the second physical microphone, the processing component forming a first virtual microphone, the processing component forming a filter that describes a relationship for speech between the first physical microphone and the second physical microphone, the processing component forming a second virtual microphone by applying the filter to the first signal to generate a first intermediate signal, and summing the first intermediate signal and the second signal, the processing component detecting acoustic voice activity of a speaker when an energy ratio of energies of the first virtual microphone and the second virtual microphone is greater than a threshold value.

19. The device of claim **18**, wherein the forming of the first virtual microphone comprises applying the filter to the second signal.

'213 Patent, cl. 14, 19; *see* '611 Patent, cl. 1, 9.

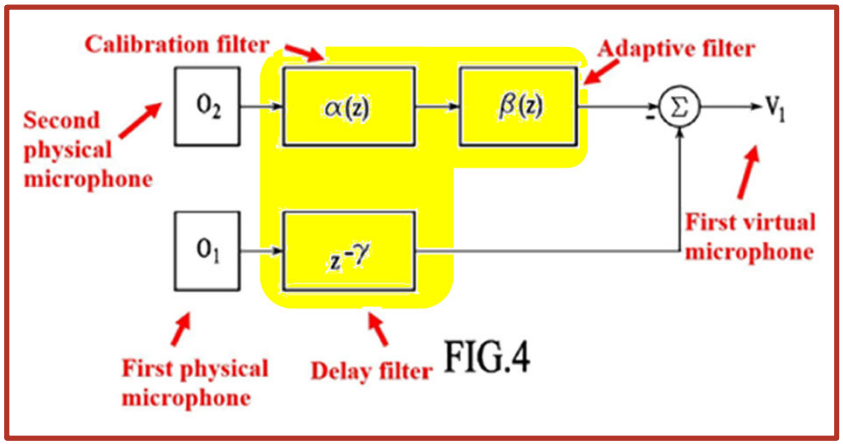

FIG.4

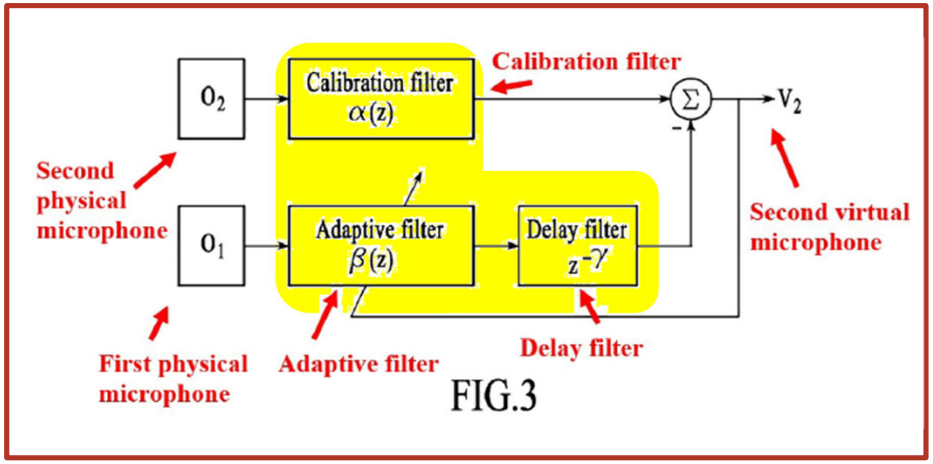

FIG.3

'213 and '611 Patents Figs. 3, 4 (annotated); 1084 Pet. 5; 1128 Pet. 6; 1084 Reply 1, 9-12; 1128 Reply 1, 9-12

Avendano + Visser Applies Filter To Both Signals (Dep. Claim 19 of 213, Dep. Claim 9 of 611)

In view of the teachings in the ’213 and ’611 patents, Visser’s cross filters meet the claimed “filter”.

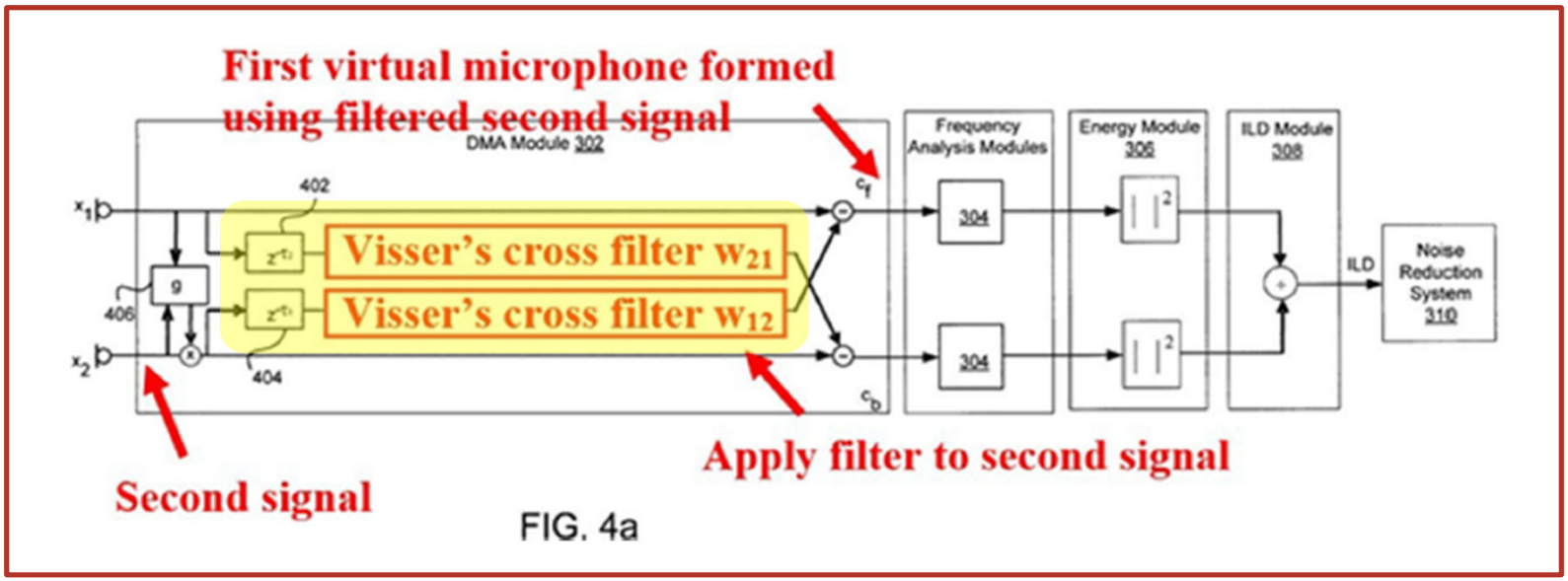

Avendano Ex. 1005 Fig. 4a (modified and annotated); 1084 Pet. 47; 1128 Pet. 48

1084 Reply 22-23; 1128 Reply 22-23

Avendano + Visser Applies Filter To Both Signals (Dep. Claim 19 of 213, Dep. Claim 9 of 611)

Visser's cross filter w_{12} also meets the claimed "filter" because it is applied to both microphone signals.

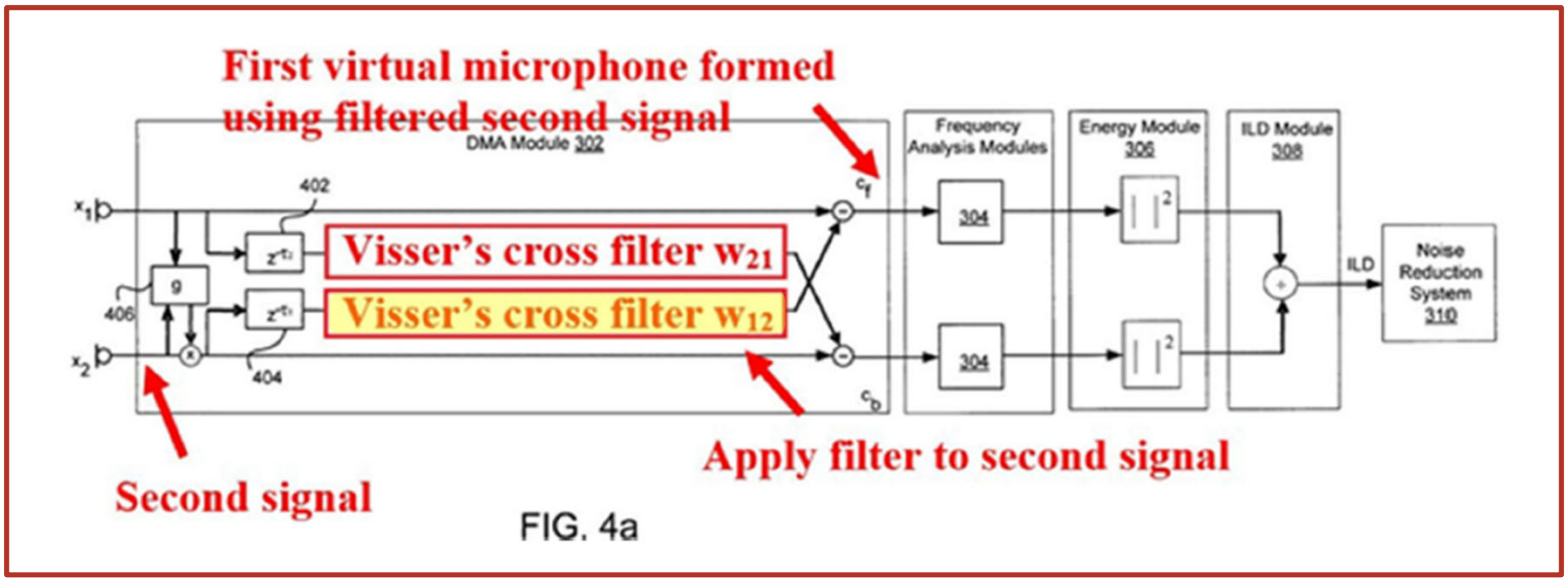

Avendano Ex. 1005 Fig. 4a (modified and annotated); 1084 Pet. 47; 1128 Pet. 48

1084 Reply 23; 1128 Reply 23

Overview

Claim Construction

- Claimed “filter” can be a “delay”

Prior Art

- Independent Claims
  - Avendano meets the claimed “filter”
  - Avendano + Visser render obvious the claimed “filter”
- Dependent Claims
  - Prior Art Applies a Calibration (Dep. Claim 15 of 213, Dep. Claim 5 of 611)
  - Prior Art Performs Compensation (Dep. Claim 16 of 213, Dep. Claim 6 of 611)
  - Prior Art Applies a Delay (Dep. Claim 17 of 213, Dep. Claim 7 of 611)
  - Prior Art Applies Filter To Both Signals (Dep. Claim 19 of 213, Dep. Claim 9 of 611)
  - Prior Art Applies the Calibration (Dep. Claim 27 of 213, Dep. Claim 17 of 611)

Avendano + Visser + Bisgaard + Hou Applies Calibration (Dep. Claim 27 of 213, Dep. Claim 17 of 611)

14. A device comprising:
a first physical microphone generating a first signal;
a second physical microphone generating a second signal; and
a processing component coupled to the first physical microphone and the second physical microphone, the processing component forming a first virtual microphone, the processing component forming a filter that describes a relationship for speech between the first physical microphone and the second physical microphone, the processing component forming a second virtual microphone by applying the filter to the first signal to generate a first intermediate signal, and summing the first intermediate signal and the second signal, the processing component detecting acoustic voice activity of a speaker when an energy ratio of energies of the first virtual microphone and the second virtual microphone is greater than a threshold value.

’213 Patent, cl. 14, 27; *see* ’611 Patent, cl. 1, 17.

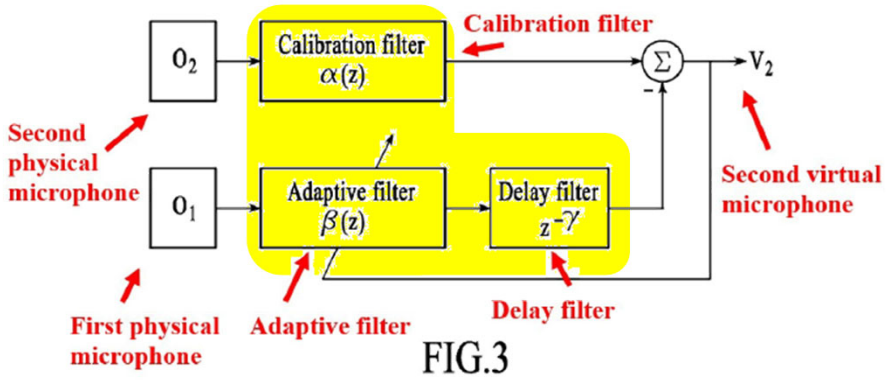

FIG.3

’213 and ’611 Patents Fig. 3 (annotated); 1084 Pet. 5; 1128 Pet. 6; 1084 Reply 1, 9-12; 1128 Reply 1, 9-12

27. The device of claim **23**, wherein the forming of the filter comprises:
generating a first quantity by applying a calibration to the second signal;
generating a second quantity by applying the delay to the first signal;
forming the filter as a ratio of the first quantity to the second quantity.

Avendano + Visser + Bisgaard + Hou Applies Calibration (Dep. Claim 27 of 213, Dep. Claim 17 of 611)

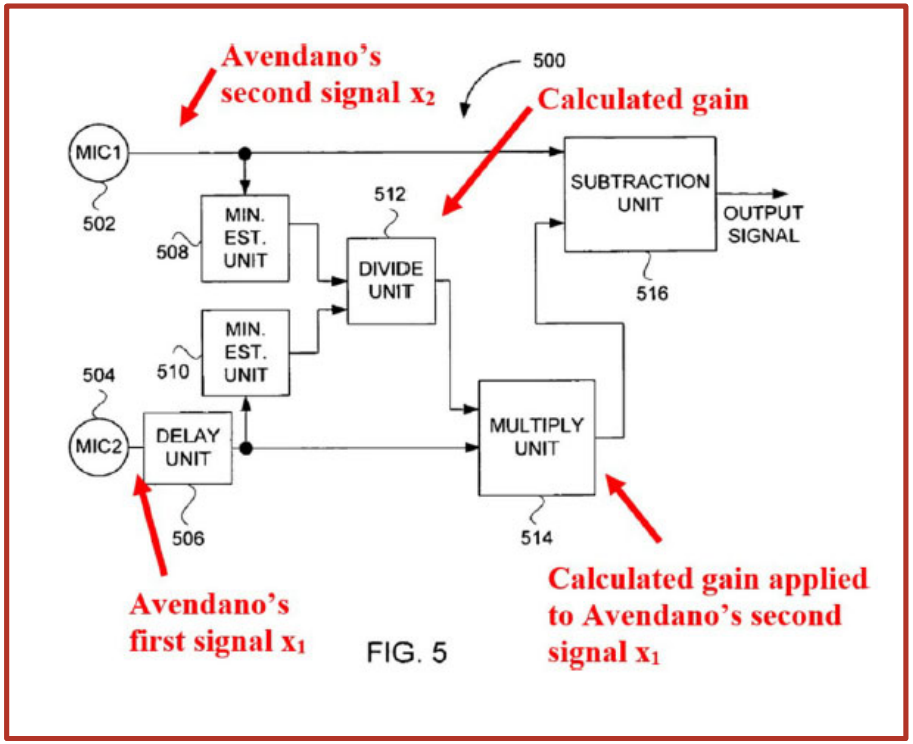

FIG. 5

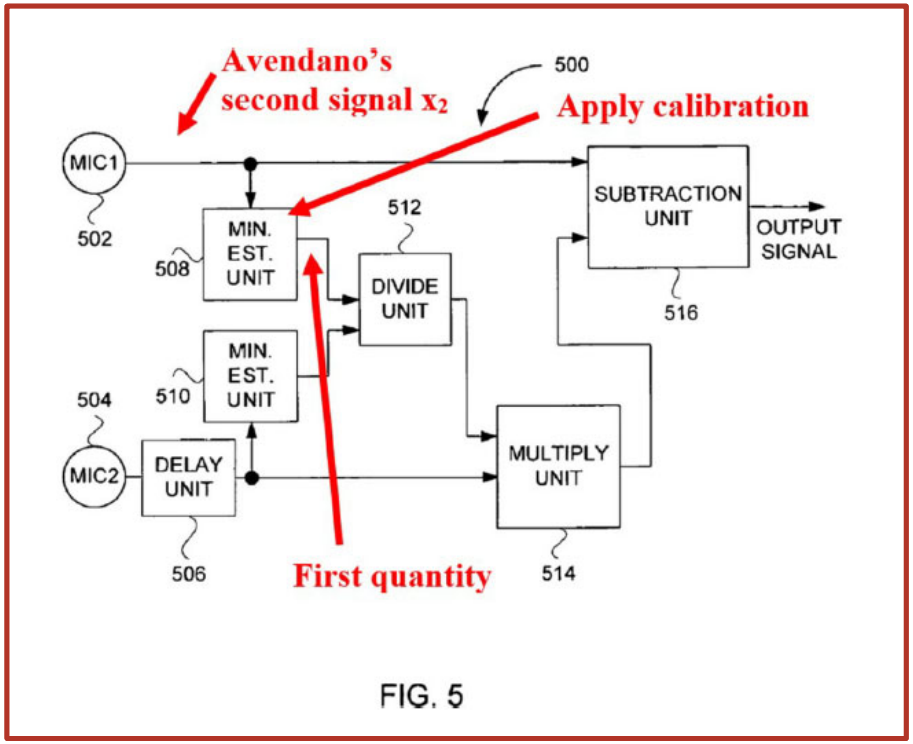

FIG. 5

Hou Ex. 1008 Fig. 5 (annotated); 1084 Pet. 61, 63; 1128 Pet. 63, 66

Avendano + Visser + Bisgaard + Hou Applies Calibration (Dep. Claim 27 of 213, Dep. Claim 17 of 611)

27. The device of claim **23**, wherein the forming of the filter comprises:

generating a first quantity by applying a calibration to the second signal;

generating a second quantity by applying the delay to the first signal;

forming the filter as a ratio of the first quantity to the second quantity.

'213 Patent, cl. 27; *see* '611 Patent, cl. 17

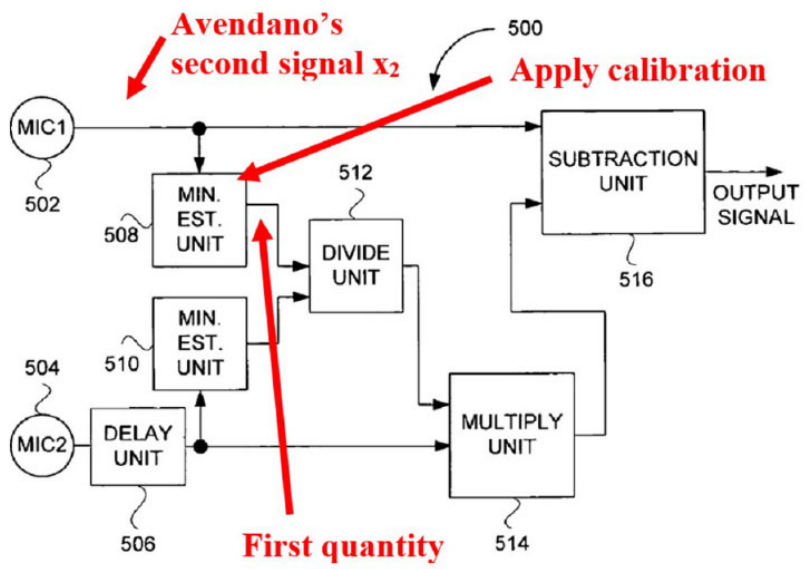

FIG. 5

Hou Ex. 1008, Fig. 5 (annotated); 1084 Pet. 63; 1128 Pet. 66

Avendano + Visser + Bisgaard + Hou Applies Calibration (Dep. Claim 27 of 213, Dep. Claim 17 of 611)

27. The device of claim **23**, wherein the forming of the filter comprises:

generating a first quantity by applying a calibration to the second signal;

generating a second quantity by applying the delay to the first signal;

forming the filter as a ratio of the first quantity to the second quantity.

’213 Patent, cl. 27; *see* ’611 Patent, cl. 17

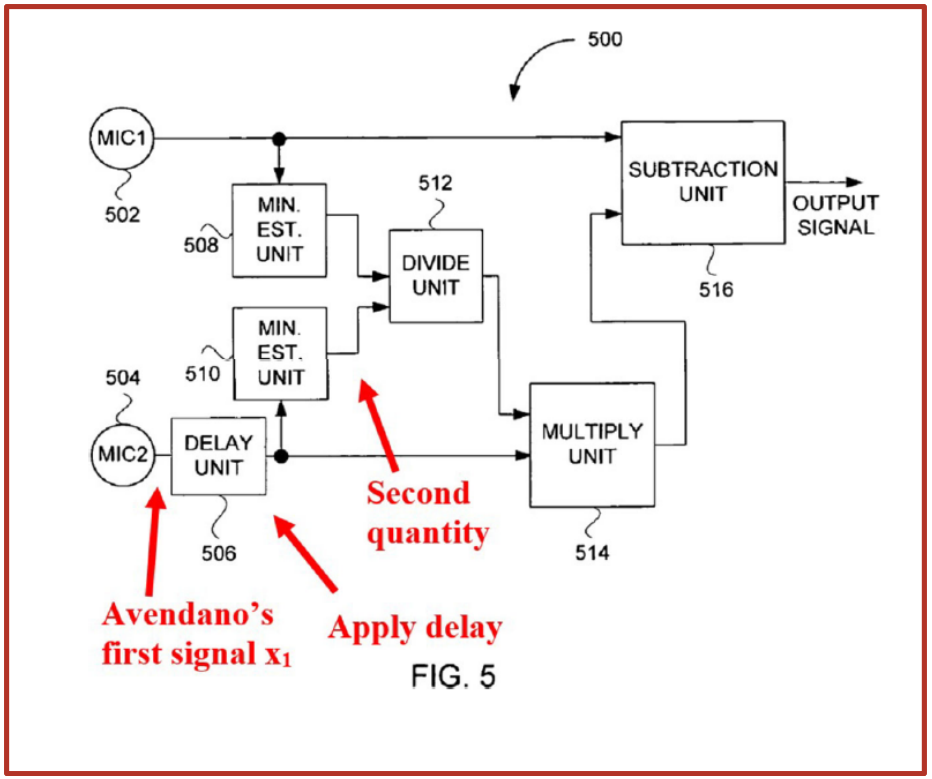

Hou Fig. 5 (annotated); 1084 Pet. 64 ; 1128 Pet. 67

Avendano + Visser + Bisgaard + Hou Applies Calibration (Dep. Claim 27 of 213, Dep. Claim 17 of 611)

27. The device of claim **23**, wherein the forming of the filter comprises:

generating a first quantity by applying a calibration to the second signal;

generating a second quantity by applying the delay to the first signal;

forming the filter as a ratio of the first quantity to the second quantity.

’213 Patent, cl. 27; *see* ’611 Patent, cl. 17

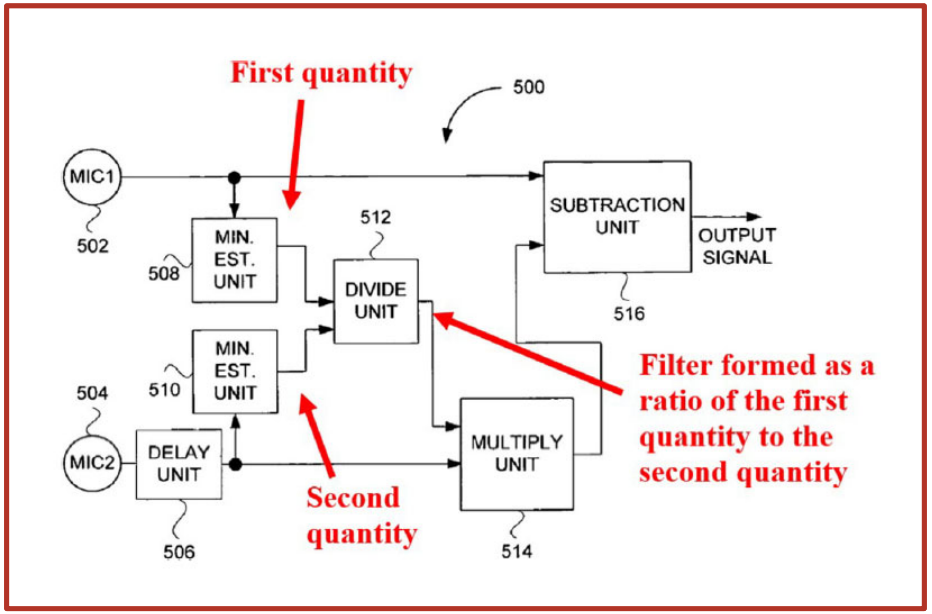

Hou Fig. 5 (annotated); 1084 Pet. 65; 1128 Pet. 68