US005702431A

United States Patent [19]

Wang et al.

[11] Patent Number: 5,702,431

[45] Date of Patent: Dec. 30, 1997

[54] **ENHANCED TRANSCUTANEOUS RECHARGING SYSTEM FOR BATTERY POWERED IMPLANTABLE MEDICAL DEVICE**

[75] Inventors: **Xintao Wang**, Houston, Tex.; **Jennifer L. Hay**, Knoxville, Tenn.

[73] Assignee: **Sulzer Intermedics Inc.**, Angleton, Tex.

[21] Appl. No.: **710,449**

[22] Filed: **Sep. 17, 1996**

Related U.S. Application Data

[63] Continuation-in-part of Ser. No. 482,786, Jun. 7, 1995.

[51] **Int. Cl.**[6] **A61N 1/02**

[52] **U.S. Cl.** **607/61**; 607/33

[58] **Field of Search** 607/61, 33, 31, 607/28; 320/2, 21, 39

[56] **References Cited**

U.S. PATENT DOCUMENTS

3,195,540	7/1965	Waller	128/422
3,454,012	7/1969	Raddi	128/422
3,775,661	11/1973	Frezzolini et al.	320/46
3,824,129	7/1974	Fagan, Jr.	136/6
3,865,101	2/1975	Saper et al.	128/206
3,867,950	2/1975	Fischell	128/419
3,888,260	6/1975	Fischell	128/419
3,942,535	3/1976	Schulman	128/419
4,014,346	3/1977	Brownlee et al.	128/419
4,057,069	11/1977	Dorffer et al.	128/421
4,082,097	4/1978	Mann et al.	128/419
4,096,856	6/1978	Smith et al.	128/419
4,096,866	6/1978	Fischell	128/419
4,134,408	1/1979	Brownlee et al.	128/419
4,172,459	10/1979	Hepp	128/697
4,275,739	6/1981	Fischell	128/419
4,323,075	4/1982	Langer	128/419
4,409,647	10/1983	Terkanian	363/27
4,432,363	2/1984	Kakegawa	128/419
4,548,209	10/1985	Wielders et al.	128/419
4,572,191	2/1986	Mirowski et al.	128/419
4,635,639	1/1987	Hakala et al.	128/419
4,661,107	4/1987	Fink	623/2
4,665,896	5/1987	La Forge et al.	128/1
4,677,534	6/1987	Okochi	363/21
4,787,389	11/1988	Tarjan	128/419
4,827,936	5/1989	Pless et al.	128/419
4,903,699	2/1990	Baker, Jr. et al.	128/419
5,184,059	2/1993	Patino et al.	320/39
5,279,292	1/1994	Baumann et al.	607/137
5,285,779	2/1994	Cameron et al.	607/5
5,314,453	5/1994	Jeutter	607/61
5,350,413	9/1994	Miller	607/61
5,411,537	5/1995	Munshi et al.	607/33

OTHER PUBLICATIONS

Sipex Corporation Signal Processing Excellence; Analog Array ASIC Design Manual, Mar. 1991 (Chapter 3).

Primary Examiner—Scott M. Getzow
Attorney, Agent, or Firm—John R. Merkling

[57] **ABSTRACT**

An improved transcutaneous energy transmission device is disclosed for charging rechargeable batteries in an implanted medical device and to minimize peak temperature rises in the implanted device. A current with a sinusoidal waveform is applied to a resonant circuit comprising a primary coil and a capacitor. Current is induced in a secondary coil attached to the implanted medical device. Two solid state switches are used to generate the sinusoidal waveform by alternately switching on and off input voltage to the resonant circuit. The present invention charges the batteries using a charging protocol that either reduces instantaneous charging current or duty cycle of a fixed charging current as the charge level in the battery increases. Peak temperature rises are less while delivering comparable electrical charge of the battery than for prior charging systems. A controller preferably is constructed as a pulse width modulation device with enable and reference voltage features to effectuate variable duty cycle control of the current level applied to the primary coil. An alignment indicator also is provided to insure proper alignment between the energy transmission device and the implanted medical device. The implantable device maximizes transcutaneous energy transmission at different current levels by placing different capacitors into the circuit depending on the magnitude of charging current. Peak temperature rises are reduced while delivering comparable electrical energy charge to the battery than for prior charging systems.

5 Claims, 8 Drawing Sheets

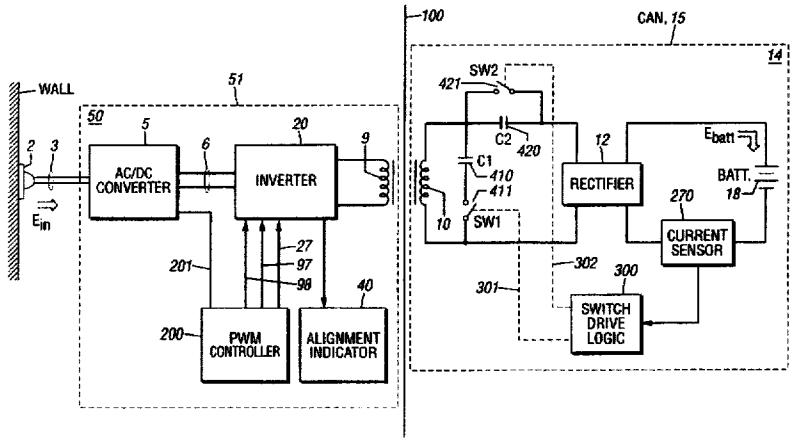

SAMSUNG EXHIBIT 1012

FIG. 1

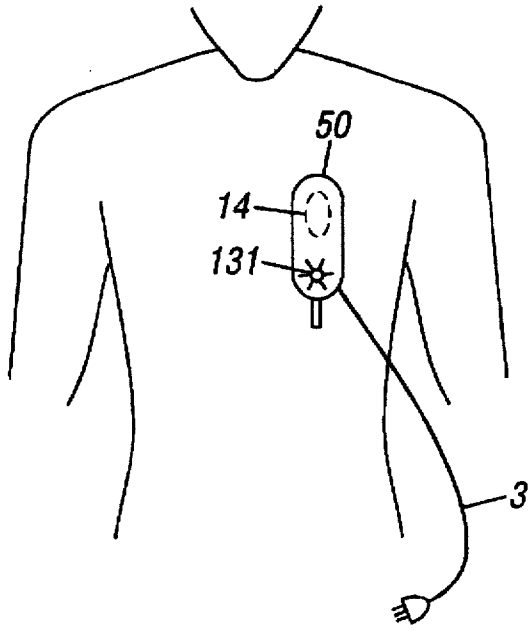

FIG. 3

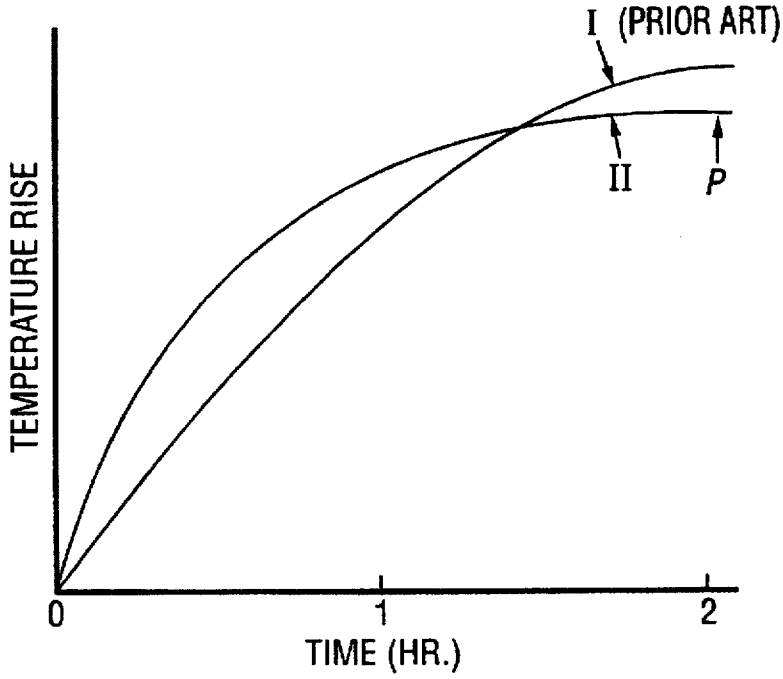

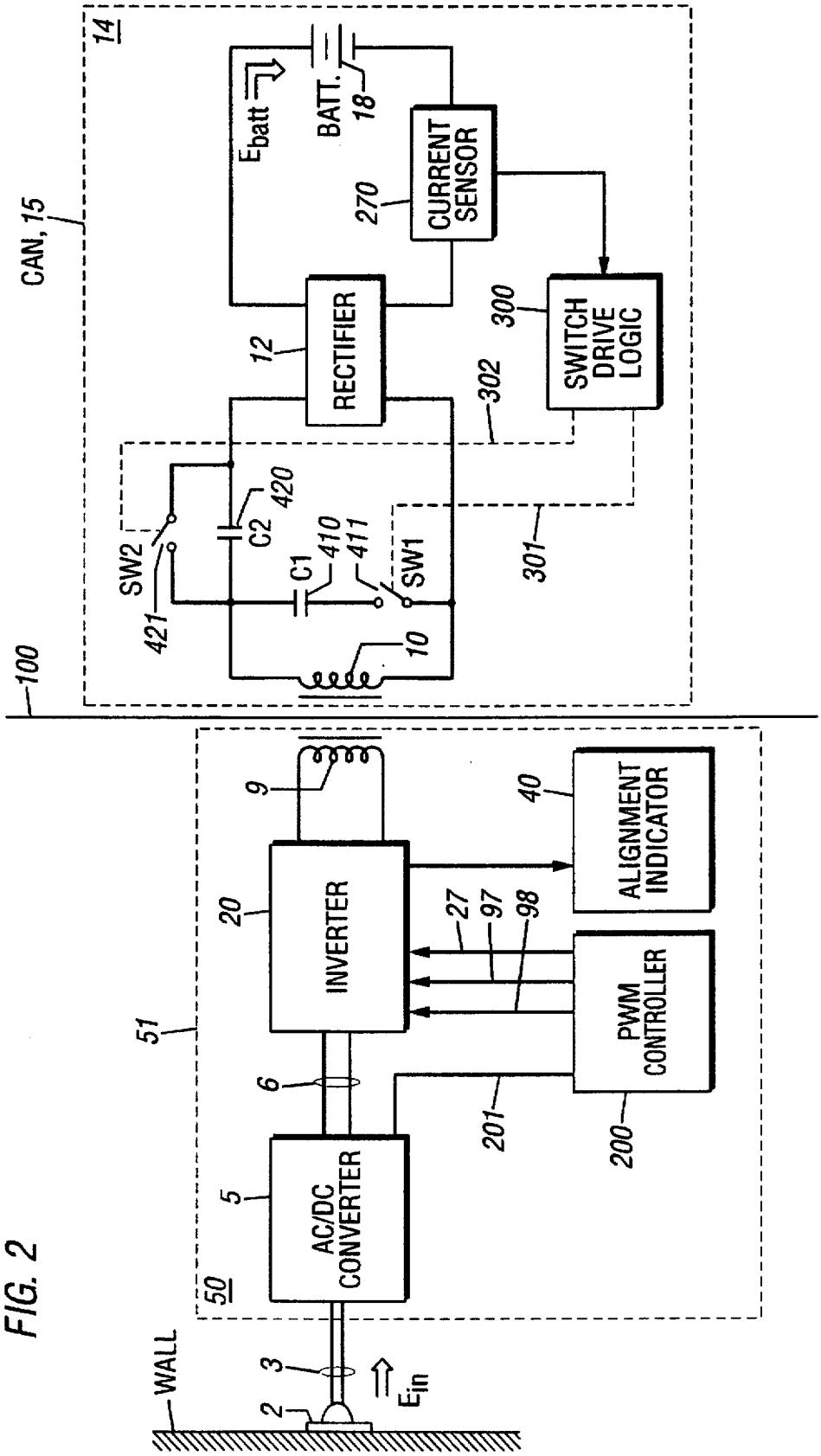
CAN, 15
14
Ebatt
BATT.
18
CURRENT SENSOR
270
RECTIFIER
12
300
SWITCH DRIVE LOGIC
302
SW2
421
C2
420
C1
410
411
SW1
301
10
100
9
INVERTER
20
40
ALIGNMENT INDICATOR
27
97
98
PWM CONTROLLER
200
201
51
6
AC/DC CONVERTER
5
50
WALL
3
2
Ein

FIG. 2

FIG. 4A
(Prior Art)

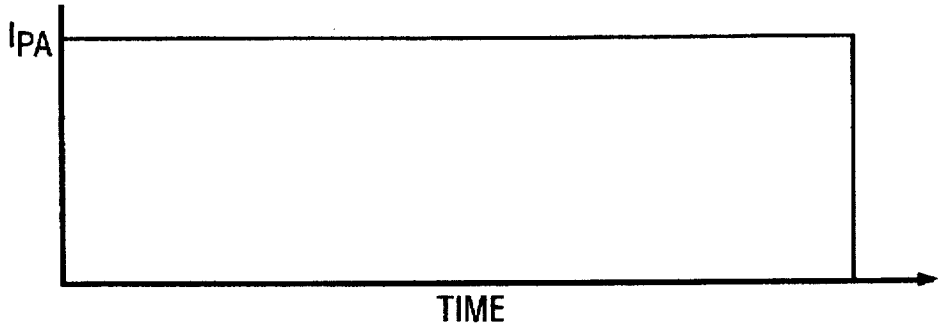

FIG. 4B

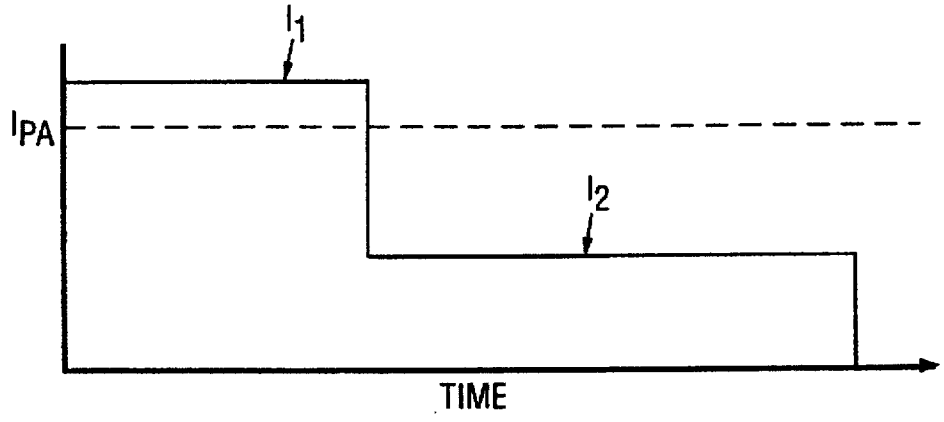

FIG. 4C

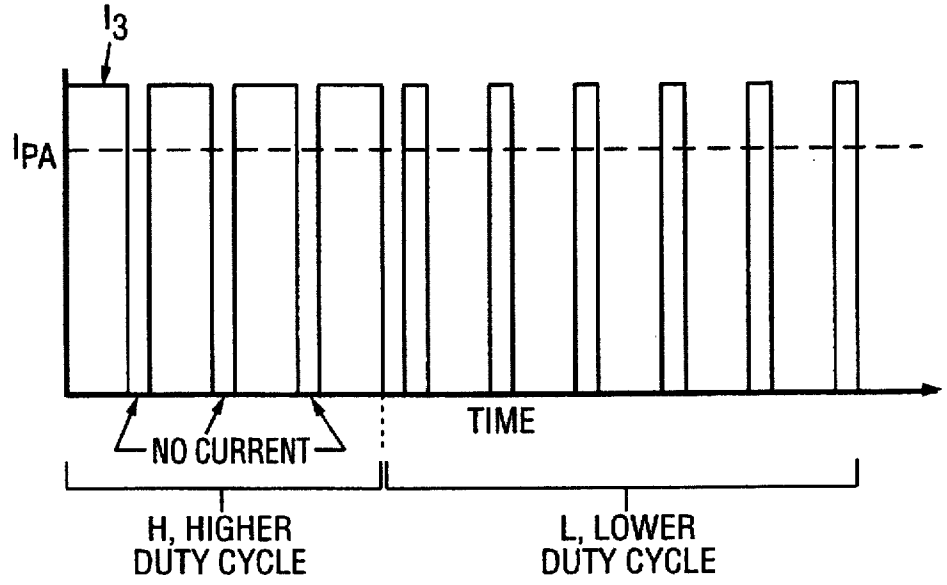

FIG. 5

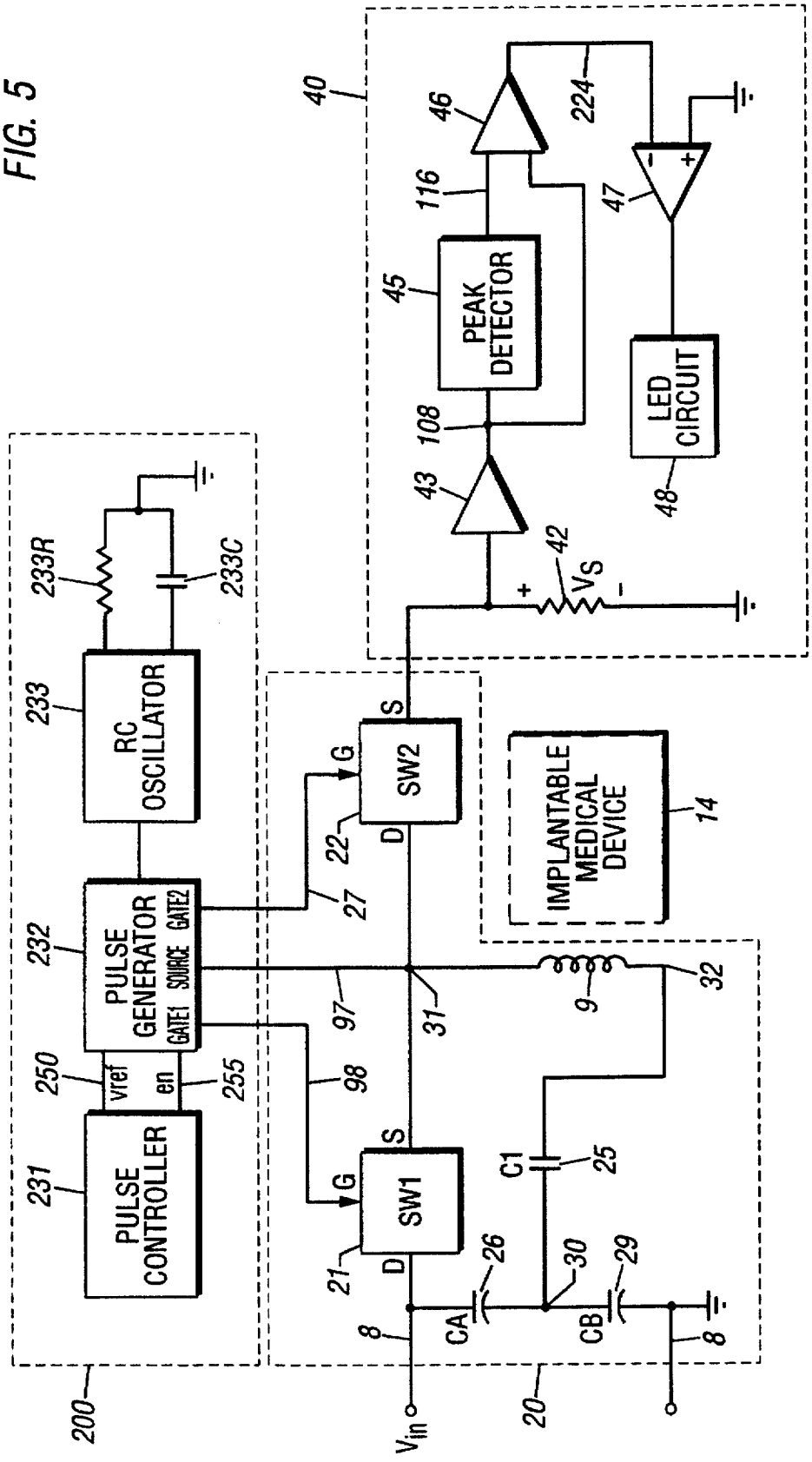
PULSE CONTROLLER
PULSE GENERATOR
GATE1
SOURCE
GATE2
vref
en
RC OSCILLATOR
233R
233C
SW1
SW2
G
S
D
IMPLANTABLE MEDICAL DEVICE
PEAK DETECTOR
LED CIRCUIT
V_S
V_{in}
CA
CB
C1
200
20
40
14
21
22
25
26
27
29
30
31
32
42
43
45
46
47
48
108
116
224
250
255
231
232
233
97
98
9
8

FIG. 6

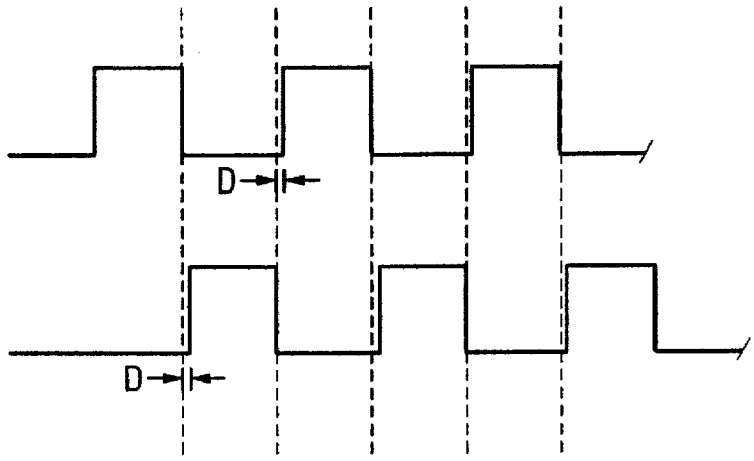
D
D

FIG. 7

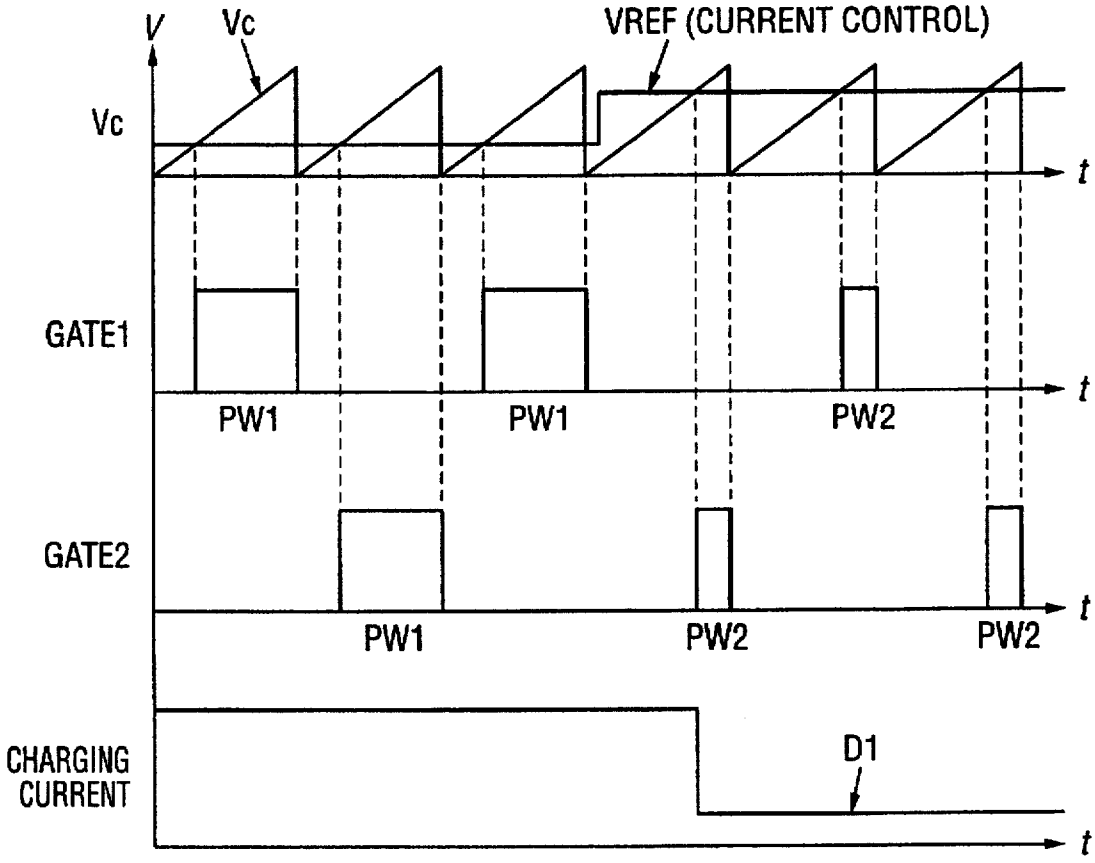
V
Vc
VREF (CURRENT CONTROL)
Vc
t
GATE1
t
PW1
PW1
PW2
GATE2
t
PW1
PW2
PW2
CHARGING CURRENT
D1
t

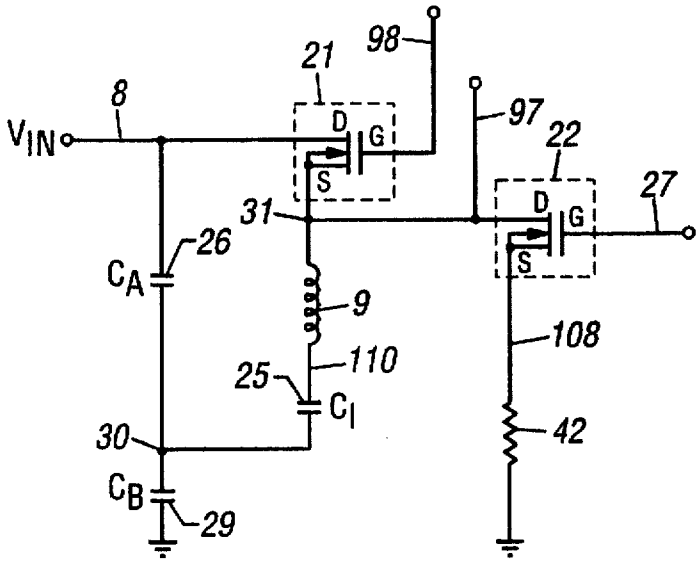

FIG. 8

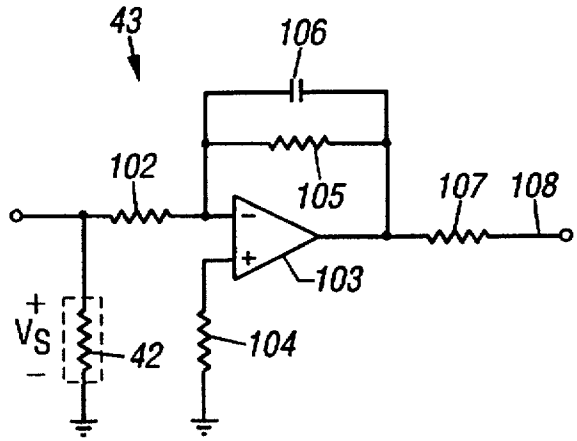

FIG. 9

FIG. 10

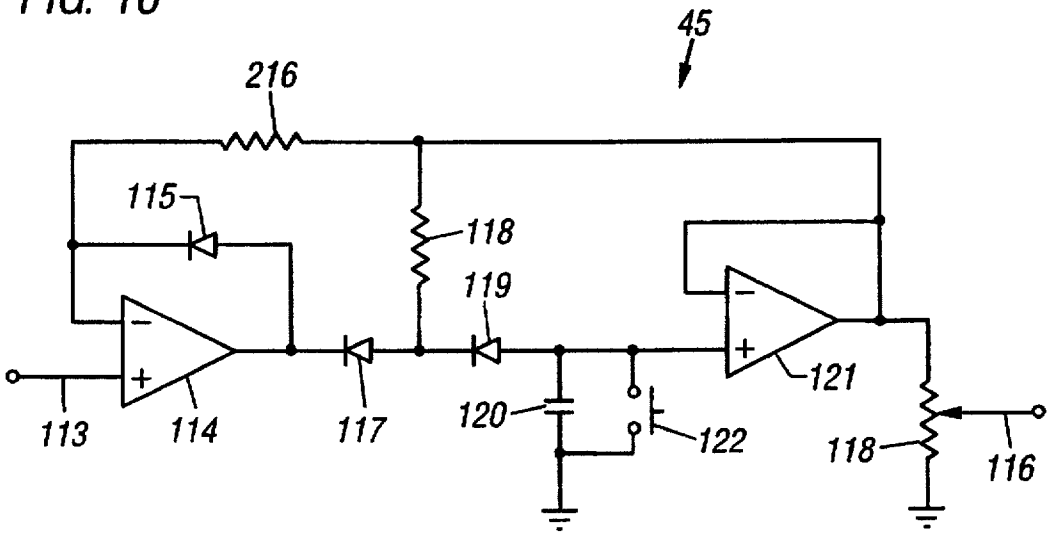

FIG. 11

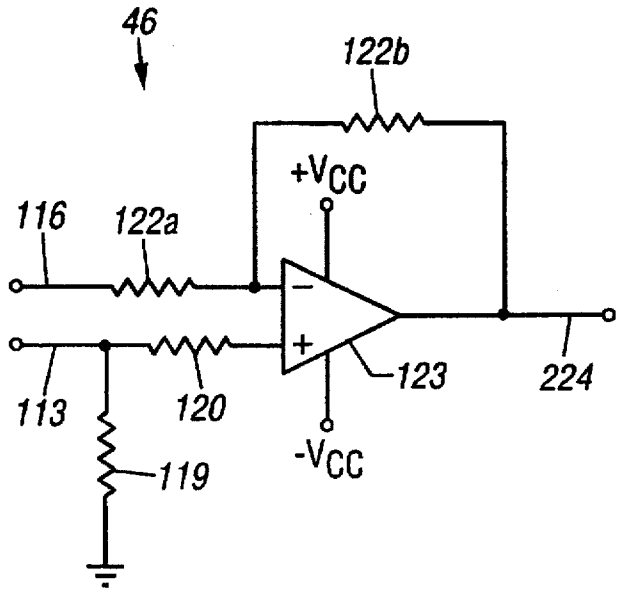
46
122b
+VCC
116
122a
123
224
113
120
119
-VCC

FIG. 12

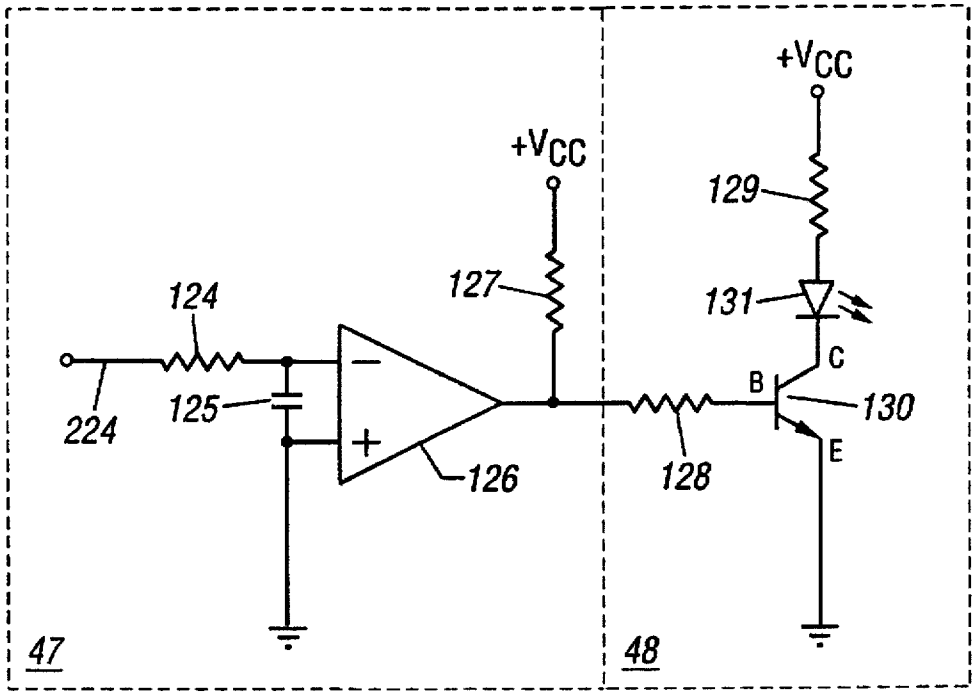
+VCC
+VCC
129
124
127
131
C
B
130
224
125
E
126
128
47
48

FIG. 13

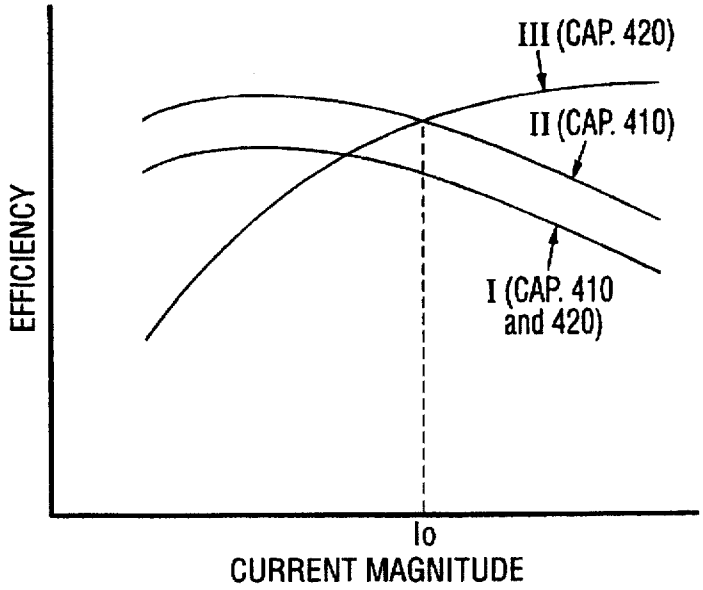
III (CAP. 420)
II (CAP. 410)
I (CAP. 410 and 420)
EFFICIENCY
Io
CURRENT MAGNITUDE

FIG. 14

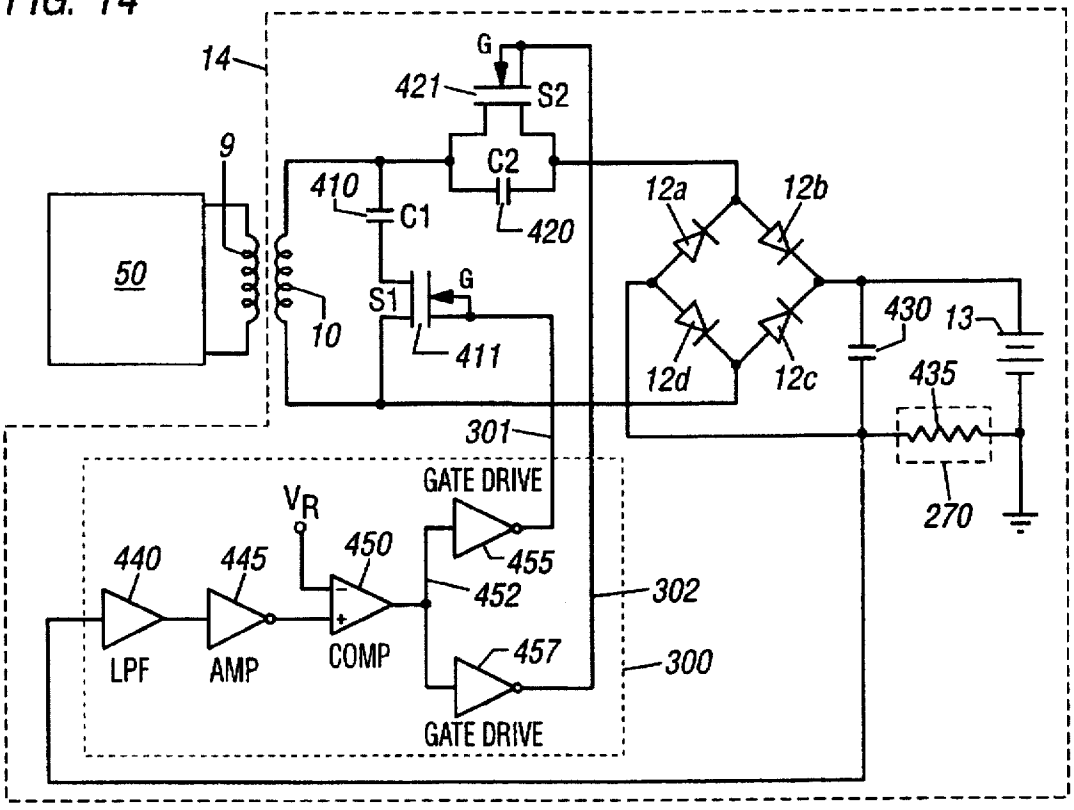
14
G
421
S2
C2
9
410
C1
420
12a
12b
50
S1
G
10
411
430
13
12d
12c
435
301
GATE DRIVE
VR
270
440
445
450
455
452
302
LPF
AMP
COMP
457
300
GATE DRIVE

ENHANCED TRANSCUTANEOUS RECHARGING SYSTEM FOR BATTERY POWERED IMPLANTABLE MEDICAL DEVICE

CROSS REFERENCE TO RELATED APPLICATION

This is a continuation-in-part application of U.S. patent application Ser. No. 08/482,786, filed Jun. 7, 1995 entitled "Transcutaneous Energy Transmission Circuit for Implantable Medical Device," assigned to the assignee of the present invention.

BACKGROUND OF THE INVENTION

1. Field of the Invention

The present invention relates generally to a power source for an implantable medical device. More particularly, the present invention relates to an external energy transmission device for recharging batteries inside an implantable medical device. Still more particularly, the present invention relates to a charging device for remotely recharging a battery in an implanted medical device. The battery may be of the type disclosed in commonly assigned U.S. Pat. No. 5,411,537, issued May 2, 1995, entitled "Rechargeable Biomedical Battery Powered Devices With Recharging and Control System Therefor," the teachings of which are incorporated by reference herein.

2. Scope of the Relevant Art

Currently, battery operable implantable medical devices principally comprise cardiac pacemakers, but also may include heart assist systems, drug infusion and dispensing systems, defibrillators, nerve and bone growth stimulators, organ stimulators, pain suppressers and implanted sensors, to name a few. The basic cardiac pacemaker generally comprises an electrode, in contact with the heart, that connects by a flexible lead to a pulse generator. The pulse generator includes a microelectronics package, which implements the pacemaker functions, and a power source for supplying operating power to the microelectronics package and other peripheral devices and components. A "fixed rate" pacemaker continuously provides timed pulses to the heart, irrespective of proper beating, while a demand inhibited pacemaker provides pulses only when the heart fails to deliver a natural pulse. Depending upon the various sensed events, the pacemaker stimulates the right atrium, the right ventricle, or both chambers of the heart in succession. The pacemakers in current use incorporate circuits and antennae to communicate noninvasively with external programming transceivers. Most pacemakers currently used are of the demand inhibited type, and are programmable.

Early pacemakers and defibrillators typically were powered by disposable primary zinc-mercuric oxide cells. Although the popularity of this power system persisted for many years, the system suffered from high self-discharge and hydrogen gas evolution. Several mechanisms contributed to battery failure, most of which were related to cell chemistry. In addition, the open-circuit voltage of each cell was only 1.5V, with several cells connected in series to obtain the voltage required for pacing. Furthermore, because of gas evolution, these prior art pacemaker could not be hermetically sealed, and had to be encapsulated in heavy epoxy. In 1970, the average life of the pulse generator was only about two years, and about 80 percent of explants were necessitated by battery failure.

Because of such limitations, many other power generation and power storage devices have been considered as possible

alternates. Research and development efforts have focused primarily on chemical batteries, nuclear batteries, and rechargeable batteries. Additional developmental efforts were directed at dividing the pacing system into two packages, with a power pack located outside the patient's body for transmitting electrical signals through wires to a passive receiver implanted in the body. Cardiac pacemakers based on rechargeable nickel-cadmium and zinc-mercuric systems also were developed. Examples of such devices are disclosed in U.S. Pat. Nos. 3,454,012; 3,824,129; 3,867,950; and 4,014,346. These rechargeable pacemakers incorporated a charging circuit which typically was energized by electromagnetic induction from a device external to the body. The electromagnetic induction produced a current in the pacemaker's charging circuit which was converted to a direct current (DC) voltage for charging the battery. Although this system was incorporated in many cardiac pacemakers, it was unpopular among patients and physicians because frequent recharging was usually necessary (sometimes on a weekly basis), and because the nickel-cadmium system suffered from memory effects which reduced the battery capacity exponentially after each recharge. In addition, the specific energy density of both types of rechargeable batteries was poor, cell voltage was low, the state-of-charge condition was difficult to ascertain, and hydrogen gas liberated during overcharge was not properly scavenged either through a recombination reaction, or hydrogen getters.

Charging nickel-cadmium cells and zinc-mercuric oxide cells is problematic. Cells of these types have a relatively flat voltage versus time curve during the charging process. The flat slope of the voltage time curve during charging provides little resolution to ascertain accurately the instantaneous percentage of full charge. Accordingly, these cells (especially nickel-cadmium), provide a poor indication of the charge level. Additionally, overcharged nickelcadmium cells liberate oxygen exothermically at the nickel which migrates to the cadmium electrode and recombines to form cadmium hydroxide. In some situations, particularly during an overcharge condition, the rate of oxygen evolution is higher than the rate of oxygen recombination. This may lead to an excessive internal pressure, forcing the cell to vent the excess gas. The overcharge reaction also heats the cell which in turn lowers cell voltage. Therefore, charging is terminated when the battery voltage begins to decrease, thus indicating the beginning of an overcharge condition.

Other techniques for controlling the charging operation have been employed. For example, U.S. Pat. No. 3,775,661 teaches that the pressure build-up internally can be sensed by a diaphragm that is external to the battery. As the pressure within the cell casing increases, the diaphragm is flexed to actuate an associated mechanical switch located in the battery charging circuit. The closure of the switch deenergizes the charger when the battery internal pressure indicates a fully charged state.

In somewhat similar fashion, U.S. Pat. No. 4,275,739 employs a diaphragm internal to the cell. Deflection of the diaphragm during an episode of increasing internal pressure indicates the cell has reached a full charge. Other examples of systems which control charge operation are U.S. Pat. Nos. 3,824,129; 3,888,260; 3,942,535; and 4,082,097.

Today, systems employing nickel-cadmium cells control battery charging use a variety of different charging techniques. Common parameters for ascertaining the end-of-charge condition include maximum voltage, maximum time, maximum temperature, a reduction in cell voltage with respect to time, (dV/dt,) change in temperature ΔT, and

increase in temperature with respect to time (dT/dt). Details of these end-of-charge indicators can be found in EDN, May 13, 1993.

Both zinc-mercuric oxide and nickel-cadmium cells suffer from additional problems such as memory effect and high self-discharge. Fast recharge often is implemented by charging the battery to some preselected voltage with a relatively high current followed by a smaller trickle charge. It is known that nickel-cadmium batteries that are fast charged cannot be charged to 100 percent of rated cell capacity. This loss of capacity is called the memory effect. Each time the battery is discharged at some low current rate, and then recharged at a higher current rate, a loss in capacity results. The capacity loss of each recharge cycle accumulates. Cells affected by the memory effect then have to be fully discharged and "reconditioned" before full capacity can be recovered. Because of this loss of capacity and high self-discharge, pacemakers with cells that suffered a memory effect had to be frequently recharged, sometimes on a weekly basis. In theory, rechargeable battery powered pacemakers were designed for a 10 year usable life. Battery chemistry problems, however, reduced the device's usable life to two or three years, the same lifetime as that of the earlier devices that employed disposable primary cells. As a result of the inherent limitations in zinc-mercuric oxide and nickel-cadmium battery cells, the assignee of the present invention has suggested the use of lithium batteries. See U.S. Pat. No. 5,411,537, issued May 2, 1995, the disclosure of which is incorporated herein by reference.

An additional problem arises with respect to recharging an implanted device's rechargeable battery. Due to the health risks and costs associated with surgical intervention, it is highly undesirable to perform surgery to access the implanted device and recharge the batteries. Some noninvasive methods for recharging implanted batteries are disclosed in the prior art. Certain patents disclose a technique for delivering electrical energy through the skin between a transcutaneous energy transfer device and an implanted medical device. For example, U.S. Pat. No. 5,350,413 discloses a transcutaneous energy transfer device comprising an external primary coil located on or near the skin, and a secondary coil for implantation under the skin. The primary and secondary coils form a transformer so that electrical current in the primary induces current in the secondary coil. An approximation to a half-wave sinusoidal voltage is developed across the primary winding by the action of a field effect transistor (FET) switching a direct current (DC) voltage source across a tuning capacitor. Because of the construction of the energy transmission device, high frequency harmonic components are present in the waveform. These high frequency components induce eddy currents in the housing of the implanted device. The temperature of the housing increases in response to the eddy currents, and can also increase in response to the elevated temperature of the battery during charging. A rise in temperature of the outer surface of the housing may be detrimental to operation of the medical device and harmful to surrounding body tissue. Industry standards suggest maximum allowable temperature rises. Limiting a temperature rise (i.e., peak temperature) is desirable to minimize the harmful effects on surrounding body tissues. Prior art systems, however, for the most part have not examined methods for reducing temperatures rises.

The prior art recharging devices suffered several drawbacks. First, many prior art systems either did not have a feature for properly aligning the external device on the patient's body over the implanted device or had such a feature but required additional circuitry (and therefore increased cost, volume, and power drain) and lacked sufficient accuracy. In addition, some prior art devices have an alignment mechanism which requires the recharging device to be turned off while alignment is measured. Also, the charging distance between the external and internal devices was limited requiring the implanted medical device to be located relatively close to the skin. Further, some systems included on implantable device consisting of two separately housed parts, an electronics unit and a receiving coil, which increased the difficulty and risk associated with surgical implantation as well as reducing the quality of the hermetic seal.

It would be desirable to provide a battery charging system that overcomes these and other problems associated with rechargeable implantable devices. In particular, it would be desirable to construct a battery charging device which can efficiently charge a battery in an implanted medical device at a relatively high power transfer rate while reducing the peak temperature generated by the device. Similarly, it would be desirable to develop an alignment mechanism that is located in the recharging device, which requires no extra components in the implanted device besides those components needed for charging. It would further be advantageous to develop an energy transmission system that minimizes the size of the receiving coil and permits the coil to be located inside the housing of the implantable device. Despite the apparent advantages of such a system, to date no such system has been developed.

SUMMARY OF THE INVENTION

The present invention overcomes the shortcomings and deficiencies of the prior art by providing a transcutaneous energy transmission system with two external solid state switches that produce a substantially sinusoidal power waveform. The solid state switches connect a regulated DC voltage across an inductor and capacitor resonant circuit. The inductor forms a primary coil of a transformer in which current is induced in a secondary coil attached to an implanted medical device. The implanted medical device receives the induced current for charging rechargeable batteries. Two different charging protocols are implemented to minimize the peak temperature produced on the outer surface of the housing of the implanted device housing or can.

Using a first charging protocol, an initial relatively high charging current is generated by an external charging device, followed by a lower charging current. The present invention includes a primary current control circuit that provides control signals to an inverter. Based upon the status of the control signals, the invention produces charging current at either a high or low level to provide efficient charging without an excessive temperature rise in the implanted device.

Charging efficiency is maximized through the use of two different resonant circuit configurations in the implanted medical device. An automatic switching mechanism is used to switch between the two resonant circuit configurations based on the magnitude of charging current. In one configuration, a capacitor connected in parallel across the secondary coil is used for relatively low levels of charging current, whereas a series connected capacitor is used for higher charging current levels. A current sensor provides an input to a switch drive that activates switches to connect one or the other of the capacitors to the charging circuit based upon the magnitude of the charging current.

In a second charging protocol, the transcutaneous energy transmission device produces a relatively high charging

current to the battery, but is periodically interrupted by periods without any charging current. The resulting duty cycle of the charging current is adjustable to allow for different levels of average charging current to the battery. An effective current step is thus generated by reducing the duty cycle of the charging current from an initial high level to a lower level. The initial charging duty cycle preferably is 100% (constant DC current). Because only one relatively high charging current is produced, albeit interrupted by periods of no current, only the series connected capacitor is used and no automatic switching mechanism and parallel capacitor are necessary.

The coils of the external energy transmission device and the implanted medical device must be properly aligned for efficient energy transmission. Accordingly, an alignment circuit and indicator are provided to indicate whether the coils are properly aligned. The alignment circuit continuously senses current in the primary coil to determine whether the angular and lateral alignment is optimal by sensing a peak DC current. A visual and/or audible signal is provided only when the charging coil is substantially in alignment with the receiving coil in the implanted device thereby indicating proper alignment,

BRIEF DESCRIPTION OF THE DRAWINGS

Other objects and advantages of the invention will become apparent upon reading the following detailed description and upon reference to the accompanying drawings in which:

FIG. 1 is a drawing showing the external transcutaneous energy transmission device and implantable medical device of the present invention positioned to charge the batteries in the implantable device;

FIG. 2 is a schematic block diagram of the preferred circuit implementation of the present invention;

FIG. 3 is a graphical illustration depicting the temperature rise which occurs during battery charging for constant current prior art chargers relative to the charging protocols of the present invention;

FIG. 4A shows a charging protocol for a typical prior art charging system;

FIG. 4B shows a preferred charging protocol for use with the invention of FIG. 2;

FIG. 4C shows an alternative charging protocol for use with the invention of FIG. 2;

FIG. 5 is a schematic block diagram providing additional details regarding the inverter, PWM controller, and alignment indicator of the transcutaneous energy transmission device shown in FIG. 2;

FIG. 6 is a timing diagram depicting the voltage at switches SW1 and SW2 in FIG. 5;

FIG. 7 is timing diagram depicting the use of a voltage reference to the PWM controller of FIG. 5 to change the magnitude of the primary coil current;

FIG. 8 is an electrical schematic diagram showing additional details of the inverter circuit of FIG. 5;

FIG. 9 is an electrical schematic diagram of an amplifier constructed in accordance with a preferred embodiment of FIG. 5;

FIG. 10 is an electrical schematic diagram showing the preferred peak detector circuitry of FIG. 5;

FIG. 11 is an electrical schematic diagram depicting the difference amplifier and associated circuitry of FIG. 5;

FIG. 12 is an electrical schematic diagram of the comparator and LED circuit of FIG. 5;

FIG. 13 shows a comparison of charging efficiency versus current magnitude for different tuning capacitor configurations; and

FIG. 14 is an electrical schematic of for the implantable device in charging circuitry accordance with the preferred embodiment.

While the present invention is susceptible to various modifications and alternative forms, specific embodiments thereof are shown by way of example in the drawings and will herein be described in detail. It should be understood, however, that the drawings and detailed description thereof are not intended to limit the invention to the particular form disclosed, but on the contrary, the intention is to cover all modifications, equivalents and alternatives falling within the spirit and scope of the present invention as defined by the appended claims.

DETAILED DESCRIPTION OF THE PREFERRED EMBODIMENT

Referring now to FIG. 1, the transcutaneous recharging system of the present invention includes a transcutaneous energy transmission (TET) device **50** and an implanted medical device **14**. In FIG. 1, the medical device **14** is shown implanted beneath the skin in the chest or pectoral region of the patient, as might be the case with a defibrillator device, with external TET device **50** positioned on, or near, the surface of the skin and placed proximally to the implanted device **14**. One skilled in the art will understand, however, that the energy transmission device **50** may be used to charge any implanted medical device, wherever located. In accordance with the preferred embodiment, the implanted medical device **14** is housed in a housing or "can" made of titanium or stainless steel. Although the energy transmission device **50** is shown with a generally rectangular configuration it should be understood that the energy transmission device may take any desired shape. Power to the TET device **50** is provided via cord **3** from an external power source such as a 120 VAC outlet on batteries (FIG. 2). An indicator **131** illuminates when TET device **50** is correctly aligned with the implanted device **14** for maximum charging efficiency.

Referring now to FIG. 2, TET device **50** of the transcutaneous recharging system generally comprises a AC/DC converter **5** and an inverter **20** connecting via conductors **6**. An alignment indicator **40** also connects to the inverter **20** to receive signals from inverter **20** when the TET device **50** is properly aligned with respect to the implanted medical device **14** for maximum efficiency. A pulse width modulation (PWM) controller **200** controls the output power level of inverter **20** (and thus the charging current). The PWM controller **200** can also periodically interrupt the inverter's charging current, thus producing a duty-cycled charging current. The TET device **50** components preferably are housed in a single enclosure **51**. In the preferred embodiment, an alternating current (AC) voltage is provided by an external power source such as 120 VAC from a wall outlet **2**. The 120 VAC source is coupled to the AC/DC converter through cord **3**. The 120 VAC voltage source is converted substantially to a DC voltage by AC/DC converter which also regulates the DC voltage at a level appropriate for transcutaneous energy transmission. AC/DC convert **5** also provides operational power to PWM controller **200** over conductor **201**. One of ordinary skill in the art will recognize that a multitude of known circuit implementations are possible for AC/DC converter **5**, and thus the present invention should not be limited to any particular embodiment for AC/DC converter **5**.

The regulated DC voltage output signal of the AC/DC converter **5** is transmitted to the inverter **20**, which converts the regulated DC voltage output to a sinusoidal current that flows through primary coil **9**. Electrical current in primary coil **9** electromagnetically induces a corresponding current in a secondary coil **10** which preferably is located in the implanted medical device **14**. Alternatively, secondary coil **10** may be external to housing **15** of the implanted device **14**, but electrically coupled to the implantable device **14**. In either case, the electrical energy of primary coil **9** couples transcutaneously between primary and secondary coils through the patient's skin **100**.

Referring still to FIG. **2**, the implanted device **14** preferably includes a rectifier **12**, battery **13** and a resonant circuit comprising secondary coil **10**, parallel capacitor **410**, and series capacitor **420**. The resonant circuit in the implanted device **14** preferably is tuned to the frequency of the AC current in the primary coil **9**. Capacitors **410** and **420** are both removable from the circuit by switches **411** and **421**, respectively. A switch drive logic **300** controls the state (open or closed) of switches **411** and **421** via lines **301** and **302** depending on the amount of current through battery **13**, as indicated by current sensor **270**.

The rectifier **12** converts the sinusoidal voltage received by the secondary coil **10** to a DC voltage for charging the battery **13**. The rechargeable battery **13** preferably comprises any of a number of different lithium chemistries, as disclosed in detail in commonly assigned U.S. Pat. No. 5,411,537, the teachings of which have been incorporated herein by reference. One of ordinary skill in the art, however, will recognize that the present invention may also be used to recharge other types of batteries, as desired.

When an alternating magnetic flux passes through a metal plate, eddy current is generated in the metal plate. The magnitude of eddy current is a function of frequency and magnitude of the magnetic flux. Eddy currents cause temperature increases. For implantable devices such as defibrillators, eddy currents are induced on the can and metal casings of components internal to the implantable device. A high charging current, therefore, creates large temperature rises. The present invention advantageously manages the level of charging current over time so as to minimize peak temperature rises without reducing the amount of charging energy delivered to the implantable device.

For typical prior art charging systems, which often implement constant current charging protocols, the temperature rise represented by curve I in FIG. **3** is exemplary. The present invention is capable of delivering the same amount of energy to the battery in the same amount of time as prior systems, but can do so in such a manner that the peak temperature of the battery is less than it would be for prior systems, Curve II exemplifies the temperature rise response of the present invention. Significantly, the peak temperature produced by the present invention is less than the peak temperature of the prior art charging system represented by curve I, as reflected at point P.

Prior art recharging systems often charge the battery at a constant current as exemplified in FIG. **4A**. As shown in FIG. **4A**, a prior art constant current I_{pA} is delivered to the battery for the entire charging period. To deliver the same amount of energy to the battery in the same period of time, the recharging system of the present invention preferably initially delivers to the battery a charging current **14** (which is higher than I_{pA}) for a first predetermined period of time, followed by a lower current I_2, which is lower than I_{pA} for the remainder of the charge cycle as shown in FIG. **4B**. The energy delivered and time required using the recharging system of the present invention embodied in the preferred protocols of FIGS. **4B** and **4C** are substantially the same as the energy delivery and time requirement for the prior art charging protocol of FIG. **4A**. However, the peak temperature rise of the implantable device can **15** is less using the protocol of FIG. **4B**, referred to in this description as the "current step" protocol.

An alternative method for achieving the same result is shown in FIG. **4C**. Using this protocol, a charging current I_3, which is higher than I_{pa}, is delivered to the battery with intermittent periods with no charging current. Because of the periodic intervals without current, the effective charging current per unit time is substantially less than the peak current I_3. Moreover, the average current delivered to the battery is a direct function of I_3 and the duty cycle of the charge current waveform. The average current, therefore, is higher during the charging period in which a higher duty cycle is used as indicated in interval H in FIG. **4C**. As the duty cycle is reduced during internal L, the result is a lower average charging current. The charging protocol of FIG. **4C** is hereinafter referred to as the "duty cycle" charging protocol. The resulting effect of this duty cycle charging protocol is a step-down in average charging current.

Consistent with the preferred embodiment, a duty cycle of 100% may be implemented during the H interval of the charging protocol of FIG. **4C**. In other words, the initial high charging current phase of the protocol of FIGS. **4C** may be identical to that of FIG. **4B**, but where the protocol of FIG. **4B** reduces the current magnitude to I_2, the protocol of FIG. **4C** maintains the same high current magnitude while duty cycling the current waveform to achieve a lower average charging current.

FIGS. **5–8** show preferred implementations of the circuitry employed to achieve the charging protocols shown in FIGS. **4B** and **4C**. Referring initially to FIG. **5**, the PWM controller **200**, inverter **20**, and alignment indicator **40** of TET **50** are shown in more detail. In accordance with the preferred embodiment, the inverter **20** includes a pair of switches **21**, **22**, a pair of capacitors **26**, **29**, and a tuning capacitor **25**. The PWM controller **200** preferably includes a pulse controller **231**, a pulse generator **232**, an RC oscillator **233**, resistor **233R**, and capacitor **233C**. One of ordinary skill in the art will recognize other circuit implementations are possible for PWM controller **200**. The PWM controller **200** preferably includes functions such as dual output capabilities and high source and sink current.

High frequency harmonic content in the current conducted through primary coil **9** will induce eddy currents in the housing or can **15** of the implantable medical device **14** causing a detrimental increase in can temperature. In addition to the benefits provided by employing the preferred charging protocols of FIGS. **4B** and **4C**, the present invention advantageously minimizes the increase in can temperature ΔT by generating a charging current signal having a substantially full sinusoidal waveform with little harmonic content. This sinusoidal charging current signal is transcutaneously transmitted to the implanted medical device **14** to charge the battery **13**. To generate the desired symmetrical sinusoidal waveform, the inverter **20** includes two switches, **21** and **22** (SW1 and SW2, respectively). Preferably these switches **21**, **22** are solid state devices and, as shown in FIG. **8**, may be implemented with metal oxide field effect transistors (MOSFET's) **21** and **22**. As shown in FIGS. **5** and **6**, the output of pulse generator **232** turns switches **21** and **22** on and off alternately such that only one switch is "on" (i.e., conducting electricity) at any given time. As shown in FIG.

6, a short time period D (for example, 2 microseconds) is provided after one switch turns off and before the other switch turns on. This "dead time" between activation of switches **21**, **22** insures that the switches are not on simultaneously which may cause a short circuit condition between the voltage input terminal V_{in} and ground. The dead time between switching off one switch and turning on the other preferably is modified to control the charging current applied to the batteries, consistent with the current step protocol of FIG. **4B**, and as described more fully below. Increasing the time when both switches **21**, **22** are off results in a decrease in the power supplied to the primary charging coil **9**.

Switches **21** and **22** preferably are turned on for the same amount of time each cycle to produce a symmetrical voltage waveform across junctions **30** and **31**. Capacitors **26** and **29**, which preferably have identical values, form a voltage divider network. Tuning capacitor **25** connects between the common connection point for capacitors **26** and **29** (junction **30**) and terminal **32** of transformer **9**. It should be noted that this duty cycle is not the same duty cycle described in FIG. **4C**. The implementation of the duty cycle protocol of FIG. **4C** is described below.

In order to minimize the eddy current induced in the housing or can **15** of implantable device **14**, the operational (or carrier) frequency of the PVVM controller **200** preferably is set at 5 KHz, but it may be set to operate within a range of 1 KHz and 40 KHz. Tuning capacitor **25** is selected to generate the desired current amplitude with the primary coil **9** leakage inductance so that a sinusoidal alternating current waveform flows through the primary coil **9** with little high frequency harmonics. Through proper selection of the value of capacitor **25**, the natural resonant frequency of the resonant circuit formed by primary coil **9** and capacitor **25** can be controlled to be slightly less than the operational frequency in order to achieve the zero-voltage turn-on of both switches **21** and **22**.

In general, the inverter **20** produces a purely sinusoidal transfer current waveform between coils **9** and **10** using a resonant circuit comprising the leakage inductance of primary coil **9** and tuning capacitor **25**. Resonance is continuously maintained by alternately activating switches **21** and **22**. The present invention can provide a wide range of charging current from 0 to 1 amperes and charging voltage from 0 to 20 V. The distance between coil **9** and coil **10** preferably is less than 2.5 inches. Although a purely sinusoidal current waveform is preferred to reduce eddy currents (and thus temperature elevation) which in part are created by higher frequency harmonics, the present invention further reduces temperature rises by using the charging protocols of FIGS. **4B** and **4C** as described below.

Referring now to FIGS. **5** and **7**, PWM controller **200** controls the time when switches **21**, **22** (SW1 and SW2, respectively) turn on, as well as the time period during which the switches are activated. Resistor **233R** and capacitor **233C** connect between RC oscillator **233** and ground. RC oscillator **233** provides a periodic signal. As one of ordinary skill in the art will recognize, the voltage across capacitor **233C**, as indicated by V_c in FIG. **5**, is substantially a saw-tooth voltage waveform as shown in sub-part (a) of FIG. **7**. Superimposed on the saw-tooth V_c waveform is an exemplary current control signal provided by the pulse controller **231**. As shown in FIG. **5**, the current control signal is transmitted to the VREF input terminal of pulse generator **232** via conductor **250**. FIG. **7** demonstrates how the current control signal on line **250** can be used to achieve different levels of charging current and the current step protocol of FIG. **4B**. The GATE signals (GATE1 and GATE2) from the pulse generator **232** are coupled to the gate inputs G of switches **21**, **22**. These GATE signals dictate when each of the switches **21**, **22** are turned on. Alternating cycles of the sawtooth V_c waveform of FIG. **7** are used to generate the GATE signals. The first V_c cycle shown in FIG. **7** produces the first GATE1 pulse in sub-part (b) of FIG. **7**. The second V_c cycle produces the first GATE2 pulse in sub-part (c) of FIG. **7**. The third V_c cycle produces the second GATE1 pulse, and so on. Each pulse is generated when the V_c voltage rises above the voltage of the current control signal (VREF). The width of each GATE pulse is dictated by the point when V_c rises above VP, EF and the point where V_c drops below VREF, exemplified in FIG. **7** as the pulse PW1. Accordingly, by increasing the level of the current control voltage on the VREF terminal of pulse generator **232**, the width of the GATE pulses are reduced as shown by pulse PW2 in FIG. **7**. As described above, increasing the time when both switches **21**, **22** are "off" reduces the magnitude of primary coil current, and thus charging current, as indicated in sub-part (d) of FIG. **7** at D1. Thus, the current control signal on line **250** is used by the pulse generator **232** as a reference value to vary the duty cycle of switches **21**, **22** and thus control the charging current.

The pulse generator **232** preferably includes an enable input terminal (EN) which controls the status of PWM controller **200**. When an enable signal is provided to the enable input via line **255**, the controller is enabled. Conversely, if a disable signal appears on line **255**, controller **200** is disabled. More specifically, the pulse generator **232** is enabled and disabled. According to the preferred embodiment, the enable/disable signal on line **255** is used to define a duty cycle for the current delivered to primary coil **9**, according to the charging protocol of FIG. **4C**.

The enable signal preferably is generated by the pulse controller **231** and transmitted via line **255** to the enable (EN) input terminal of the pulse generator **32** to turn the pulse generator on and off. Thus, for example, a logic "0" on the enable input line **255** may turn the PWM controller on, while a logic "1" turns it off. Once the pulse generator **232** is turned off through the enable signal, no current flows through the primary coil **9** and thus, the battery is not charged during the period when controller **23** is disabled. The pulse controller **231** preferably produces an enable signal similar to the duty cycle waveform of FIG. **4C**. As discussed above, the resulting charging current is determined by the amplitude of the charging current when the pulse generator **232** is enabled (on) and the duty cycle of the enable input signal as one of ordinary skill in the art would understand. The amplitude of the charging current when the PWM controller **23** is on can be preset through a specified current control voltage (VREF) on line **250**. Thus, the PWM controller **200** can direct the inverter **20** to produce a step down average charging current by generating an enable signal with a variable duty cycle, thereby interrupting the gate signals to switches SW1, SW2. The average charging current is directly related to the duty cycle of the enable signal. It should be noted that for the step down current protocol of FIG. **4B**, the PWM controller's enable input is continuously asserted to constantly maintain the pulse generator **232** in the on condition.

Referring now to FIGS. **5** and **8**, switches **21** and **22** preferably are implemented with MOSFET devices. The pulse generator **232** (FIG. **5**) connects to the gate G and source S terminals of MOSFET switch **21** through conductors **98** and **97** (FIGS. **5** and **8**). The source terminal S of MOSFET **21** and the drain terminal D of MOSFET **22**

connect to terminal 31 of primary coil 9. The drain terminal D of MOSFET 21 connects to capacitor 26 and also receives the input regulated DC voltage V_{in} on conductor 8 from AC/DC converter 5 (FIG. 2). The gate terminal G of MOSFET 22 connects to the GATE2 terminal of controller 23 via conductor 27. The source terminal S of MOSFET 22 provides a path for current from the primary coil 9 to ground through the current sensing resistor 42 of the alignment indicator 40. When switch 21 (SW1) turns on, a current path is completed from Vin, through switch 21, node 31, coil 9, capacitor 25, node 30, and capacitor 29 to ground. When switch 22 (SW2) turns on, a current path is completed from Vi., through capacitor 26, node 30, capacitor 25, coil 9, node 31, switch 22, and resistor 42 to ground. Referring now to FIG. 5, an additional advantageous feature of the present invention is an indicator for providing a visual indication of when the TET device 50 is properly positioned with respect to implanted device 14 for maximum charging efficiency. When switch 22 is turned on by controller 23, current flows from primary coil 9 through switch 22 and to resistor 42 in alignment indicator 40. Due to the symmetric AC current on the primary coil 9, the current through the switch 22 comprises half of the coil current during ne-half the time of each cycle of the AC waveform. Thus, only half of the primary coil current is received by resistor 42. In the preferred embodiment, the DC component of the voltage across the resistor 42 is used as an indication of DC input current from the voltage source V_{in}.

Alignment indicator 40 provides a light emitting diode (LED) in LED circuit 48 or other output device to indicate proper positioning of respect to implant with respect to implanted device 14. The TET system can be tuned so that the amplitude of the AC current through the primary coil 9 decreases when the primary coil 9 is not properly aligned with secondary coil 10. The input DC current, therefore, depends on the power draw of the load on the secondary coil and the proximity and orientation of the primary coil 9 to the secondary or receiving coil 10. Therefore, a measurement of the magnitude of the input current preferably is used in the present invention to determine if the TET device 50 is positioned properly for maximum energy transmission efficiency. The following discussion details the construction and operation of the alignment indicator 40 which uses the correlation between the input current and alignment to provide an output signal which indicates when the energy transmission device 50 is sufficiently aligned with the receiving coil 10 of the implanted device 14.

Referring to FIG. 5, the resistance value of resistor 42 preferably is small to minimize the loading effect on the inverter 20 that would otherwise result. In the preferred embodiment, resistor 42 is selected as approximately 0.5 ohms. It will be understood that the purpose of resistor 42 is to sense current in the primary coil 9 and provide an output signal indicative of the current amplitude and phase shift. Accordingly, although a resistor is preferable, any current sensing device can be used in place of resistor 42.

Referring still to FIG. 5, the alignment indicator 40 preferably includes a low-pass amplifier 43, a peak detector 45 to detect the peak DC current amplitude through switch 22, a differential amplifier 46 to amplify the difference between the peak current amplitude and the amplitude of the output current signal from low-pass amplifier 43 on line 108, a comparator 47 to compare the amplified difference with ground voltage, and an LED or other output circuit 48. In the preferred embodiment, the LED circuit 48 (or other output device) only provides an output signal indicating alignment if the present sensed current amplitude is within a predetermined range of the peak value.

Current flow through resistor 42 from switch 22 generates a voltage V_s across resistor 42 which is amplified and filtered by low-pass amplifier 43 to effectively obtain the DC component of the waveform through resistor 42, and to filter out the AC portion of the waveform. The peak detector 45 senses the peak amplitude value of the output signal on conductor 108, which connects to the output terminal of the low-pass amplifier 43. The peak detector 45 stores the peak value, unless a higher amplitude is subsequently sensed. If a higher value is subsequently sensed, the peak detector 45 replaces the stored peak value with the new peak value. The output signal of the peak detector 45 on conductor 116 corresponds to the peak positive voltage sensed by the peak detector 45. This peak voltage (which is scaled to provide a threshold value that is somewhat less than the peak value), is provided as an input to the differential amplifier 46. The other input to the differential amplifier comprises the current sensed output of the low-pass amplifier 43 (conductor 108). The differential amplifier 46 amplifies the difference between the scaled peak value, and the present sensed value, and provides an output signal to comparator 47. Comparator 47 compares the difference with ground voltage, and turns on the LED circuit 48 when the current sensed value is greater than the scaled peak value. This condition will occur when the TET device 50 is positioned properly over the implanted device. In order to capture the optimum location, the primary coil 9 has to pass the optimal location at least once to let the peak detector 45 record the peak DC current value. Thereafter, the LED circuit 48 will not be turned on unless the primary coil 9 stays at the optimum location and orientation. If the lateral placement of the TET device is misaligned with respect to the receiving coil, or if the TET device 50 is positioned at a nonoptimal angle with respect to the implanted device for peak transmission efficiency, the scaled peak value will be greater than the present output voltage at the output terminals of filter 44, and the comparator 47 will produce an output signal de-activating the LED circuit 48.

One of ordinary skill in the art will recognize that a plurality of circuit implementations are possible for the low-pass amplifier 43, peak detector 45, differential amplifier 46, comparator 47, and LED circuit 48 of alignment indicator 40. In addition, the functions of two or more of these components may be performed by a single device. The circuit schematics of FIGS. 9–13 are shown as the preferred embodiment of the alignment indicator of the present invention.

As noted above, the voltage waveform across resistor 42 includes both AC and DC components. In the preferred embodiment, the AC component is filtered to permit examination of the DC component. Referring now to FIGS. 5 and 9, low-pass amplifier 43 is configured as an inverting amplifier, with an operational amplifier 103, an input resistor 102, a feedback resistor 105, a feedback capacitor 106, and an output resistor 107. The negative ratio of the resistance of feedback resistor 105 to the resistance of resistor 102 determines the DC voltage gain of the amplifier 43. Preferably, the gain is set at 100. Therefore, the resistance of resistor 105 should be one hundred times greater than that of resistor 102. Resistance values of 44.9 Kohms for resistor 105 and B449 ohms for resistor 102 are preferred, but numerous other values are possible. Capacitor 106, together with resistor 102, provide low-pass filter capabilities to amplifier 43. A resistor 104 connects the non-inverting input terminal of operational amplifier 103 to ground. The output terminal of operational amplifier 103 connects to feedback resistor 105, capacitor 106, and output resistor 107. The

output of amplifier **43** (which preferably indicates a negative voltage value) is provided on conductor **108** to peak detector **45**.

Referring now to FIGS. **5** and **10**, the preferred construction and operation of the peak detector **45** will now be described. In the preferred embodiment, peak detector **45** comprises an operational amplifier **114**, peak storage capacitor **120**, and voltage follower **46**. The low-pass amplifier **43** connects through conductor **108** to the non-inverting input terminal of operational amplifier **114**. The output terminal of operational amplifier **114** connects to the cathode of diode **117**, the anode of which connects to the cathode of diode **119**. Current from operational amplifier **114** (with a negative amplitude) flows through diodes **117** and **119**, charging storage capacitor **120** to a voltage indicative of the peak value at the non-inverting input of operational amplifier **114**. Diode **115** prevents operational amplifier **114** from saturating in the absence of peak values, and resistor **216** provides a path through which the current from diode **115** can flow. Switch **122** resets the peak detector output signal to 0 V upon closure of that switch.

When a new peak arrives at the non-inverting input of operational amplifier **114**, the output of op amp **114** swings in the negative direction, turning diode **115** off (preventing current flow through resistor **216**) and turning diodes **117** and **119** on, permitting capacitor **120** to charge. As the input voltage on conductor **108** drops, the output of operational amplifier **114** swings in the positive direction, turning off diode **117** and diode **119**. As a result, capacitor **120** maintains its peak voltage charge, with diode **119** and resistor **118** limiting the leakage of capacitor **120**. As the output voltage continues in the positive direction, diode **115** turns on to prevent saturation of the op amp **114**.

The voltage follower buffer **121** not only provides a high input impedance to minimize loading on other stages of the circuitry, but also scales down the peak detected voltage through the use of a manually adjustable potentiometer **118**. Potentiometer **118** connects between the output of operational amplifier **121** and ground to provide an adjustable voltage divider in which conductor **116** carries the scaled down peak voltage to an input of differential amplifier **46**. The output of operational amplifier **121** is fed back to the inverting input of amplifier **121** and is provided via conductor **115** to peak detector **45**.

Referring now to FIG. **11**, the differential amplifier **46** preferably comprises an operational amplifier **123**, a feedback resistor **122*b***, and input resistors **120**, **122*a***. The output signal from peak detector **45** couples to the inverting input terminal of operational amplifier **123** through resistor **122*a***. The output signal from the low-pass amplifier **43** couples through resistor **120** to the non-inverting input terminal of operational amplifier **123**. Operational amplifier **123** amplifies the difference between the scaled peak value on conductor **116**, and the present sensed value on conductor **108**, and provides the amplified difference as its output **224**. In the preferred embodiment of FIG. **11**, the resistance of resistor **122*b*** is equal to the resistance of resistor **119**, and the resistance of resistor **122*a*** is equal to the resistance of resistor **120**, to provide a gain for difference amplifier **46** that equals the ratio of resistor **122*b*** to resistor **122*a***.

Referring now to FIGS. **5** and **12**, the comparator **47** and LED circuit **48** are shown in detail. The comparator circuit **47** preferably comprises a comparator **126**, a pull-up resistor **127**, input resistor **124**, and capacitor **125**. The LED circuit **48** includes an LED **131**, transistor **130**, current limiting resistors **128** and **129**. The output of differential amplifier **46** preferably connects via conductor **224** to the inverting terminal of comparator **126**, through input resistor **124**. The non-inverting input terminal of comparator **126** connects to ground, and to the inverting input terminal of comparator **126** through capacitor **125**. The output of comparator **126** provides an input signal to the LED circuit **48** to turn on LED **131**, or an alternative output device. Resistor **127** comprises a pull-up resistor which may be necessary if comparator **126** has an open-collector output stage. In the preferred embodiment, the output terminal of comparator **126** connects to the base terminal B of transistor **130** through current limiting resistor **128**. Power from the voltage source $+V_{cc}$ is provided to LED **131** through resistor **129** when transistor **130** is turned on by the supply of sufficient base current from the comparator **126** to the base terminal B of the transistor **130**. Although an NPN transistor is shown in FIG. **12**, one of ordinary skill in the art will recognize that other types of LED driver circuits are possible, including the use of PNP transistors, and the present invention should not be construed as limited by the particular circuit embodiment shown in FIG. **12**. Similarly, although an LED **131** is shown as the output device, it will also be understand that other output devices, such as audible indications, may be used as an alternative, or in addition to LED **131**.

An important parameter associated with a recharging system is charging efficiency. Referring to FIG. **2**, recharging efficiency can be defined as the ratio of the electrical energy input to the charging system, E_{in}, in TET device **50** that is to the energy delivered to the battery, E_{batt} in implantable device **14**. Part of the energy coupled to the implanted device that is not delivered to the battery **13** is converted to thermal energy detrimentally heating the implanted device. Thus, it is desirable to maximize recharging efficiency in order to minimize temperature increases of the implantable device.

Referring now to FIG. **13**, it has been determined that charging efficiency is a function of the magnitude of the charging current. Curve I exemplifies the efficiency when both capacitors **410** and **420** of implantable device **14** in FIG. **2** are used in the charging circuit simultaneously. Improved efficiency can be achieved if either capacitor **410** or **420** is used, but not both simultaneously. As shown in curve II, higher efficiency can be achieved using just capacitor **410** than using both capacitors together, but the efficiency still drops off at higher charging current levels. If just capacitor **420** is used (curve III), higher efficiency is obtained at higher current levels, but lower efficiency at lower current levels than if just capacitor **410** is used. To maximize charging efficiency, therefore, it is preferable to use only capacitor **410** when charging at lower current levels and only capacitor **420** when charging at higher current levels, but not both capacitors simultaneously. Current level I_o may be defined as the charging current above which capacitor **420** is used and below which capacitor **410** is used.

It should be noted that the secondary circuit in implantable device **14** can be properly tuned to the frequency of the AC current through the primary coil **9** by using either capacitor **410** or **420** in conjunction with secondary coil **10**. That is, battery charging is possible regardless of which capacitor is included in the preferred embodiment. However, to achieve maximum efficiency, capacitor **410** preferably is used for low current charging and capacitor **420** is used for high current charging. Accordingly, a mechanism for switching the capacitors into the circuitry is described below.

Referring now to FIG. **14**, switches **411** and **421** of implantable device **14** are shown consistent with the preferred embodiment as MOSFET devices. Switch **421** effec-

tively provides a short circuit across capacitor **420** when switch **421** is closed and an open circuit when the switch is opened. Thus, opening switch **421** causes capacitor **420** to be used, which is preferable during high current charging periods (i.e., for generating current I_1 in FIG. 4B). Similarly, switch **411** can be opened, removing capacitor **410** from the charging circuit during high current charging. When switch **411** is closed, capacitor **410** forms part of the charging circuit, which is preferable during low current charging (for generating current I_2 in FIG. 4B). Preferably, switches **411** and **421** are opened for the duty cycle protocol of FIG. 4C because only a single current level is generated.

Referring to FIG. **14**, the current sensor **270** (FIG. 2) preferably comprises a current sensing resistor **435**. As one of ordinary skill in the art will recognize, current sensing components typically include low resistance resistors, such as 0.5 Ω resistors or less. Because one side of current sensing resistor **435** is grounded, the voltage on the other side at point S1 is proportional to the current through the resistor. Because the current sensing resistor is connected in series with the battery **13**, the voltage at point S1 is proportional to the charging current applied to the battery.

Referring again to FIG. **14**, the voltage at point S1 (i.e., battery current) is provided as an input to switch drive logic **300**. After filtering voltage S1 to remove high frequency noise, including ringing and carrier frequency, by low pass filter **440**, the filtered signal is then amplified by inverting amplifier **445**. Comparator **450** compares the amplified battery current signal to a reference voltage, V_R, which is provided on line **447**. The reference voltage V_R can be generated in several ways consistent with the preferred embodiment. For example, voltage V_R may be derived from the battery **13** through a voltage regulator. Reference voltage V_R is predetermined so as to represent the charging current level at which it is desired to switch from capacitor **410** to **420**, or vice versa. Preferably, V_R is set to correspond to current level I_c from FIG. **13**. One of ordinary skill in the art will also recognize the benefit in incorporating hysteresis into the comparator circuit **450** to prevent the comparator from oscillating if the amplified current signal S1 hovers around the value of the reference voltage V_R. Low-pass filter **440**, inverting amplifier **4** comparator **450** can be provided by any of a number of conventional devices, and the present invention is not limited to any specific circuit implementation.

Referring still to FIG. **14**, when the amplified current signal provided to the positive terminal of the comparator **450** is greater than the reference voltage V_R, the output of the comparator on line **452** will become a logic high level. This high logic signal on line **452** in turn drives switches **411** and **421** open through inverting gate drives **455** and **457** which are of a type known to those of ordinary skill in the art. The low output signal of gate driver **455** on line **301** is provided to the gate terminal G of switch **411**, thereby opening switch **411**, and thus removing capacitor **410** from the circuit. Further, the low output signal of gate driver **457** on line **302** is provided to the gate terminal G of switch **421**, thereby opening switch **421**, and placing capacitor **420** in the charging circuit. Therefore, for high charging currents over the trip point set by voltage V_R (I_c), charging efficiency is maximized by using only capacitor **420**, not capacitor **410**, in the charging circuit.

When charging the battery at a low current level (less than the trip point defined by V_R), the output signal on line **452** from the comparator **450** is driven to a low logic level because V_R exceeds the output signal from inverting amplifier **445**. The low logic level from the output of comparator **450** activates the inverting gate drives **455** and **457** to high output levels. A high output signal on line **301** from gate drive **455** closes switch **411** thereby placing capacitor **410** into the charging circuit. A high output signal on line **302** from gate drive **457** closes switch **421** and effectively removes capacitor **420** from the charging circuit. Therefore, for low charging currents (less than the trip point set by voltage V_R), charging efficiency is maximized by using only capacitor **410**, not capacitor **420**, in the charging circuit.

Finally, referring to FIGS. **2** and **14**, rectifier **12** preferably comprises a full-wave bridge rectifier including diodes **12*a***, **12*b***, **12*c***, and **12*d***. Capacitor **430** is provided as an output filter so that a good approximation to a DC level current is provided to battery **13**.

While a preferred embodiment of the present invention has been described, one skilled in the art will understand that many modifications can be made to the present invention without departing from its principles. The following claims should not be construed as limited to the preferred embodiment described above, but instead should be construed broadly to cover all modifications and equivalents, which will be apparent to one skilled in the art.

What is claimed is:

1. A transcutaneous energy transmission system for transmitting electrical energy from an external charging device to an implantable medical device for providing power to said implantable medical device to charge a battery in said implantable medical device, said transcutaneous energy transfer system comprising:

an external charging device containing:

a primary coil in said external charger for transmitting said power transcutaneously to said medical implantable device;

a capacitor in said external charger coupled to said primary coil, said primary coil and said capacitor forming a resonant circuit;

a controller for controlling the power provided to said resonant circuit;

an implantable medical device containing:

a secondary coil in said implantable medical device;

a first capacitor connected in series to a first switch, the combination of the first capacitor and first switch connected in parallel across said secondary coil;

a second capacitor connected to said secondary coil;

a second switch connected in parallel across said second capacitor,

and a battery wherein the battery connects to said second capacitor and said second switch.

2. The system of claim **1**, wherein the implantable medical device further comprises a current sensor for sensing the magnitude of current charging the battery.

3. The system of claim **2**, wherein the implantable medical device further comprises a switch drive for turning said first switch and said second switch on and off depending on the magnitude of current charging the battery, and wherein the magnitude of current charging the battery is indicated to the switch drive by the current sensor.

4. The system of claim **3**, wherein said first switch is closed to allow current to flow through said first capacitor and said second switch is closed to short circuit said second capacitor, when a relatively low charging current is applied to said battery.

5. The system of claim **3**, wherein said first switch is opened to prevent current from flowing through said first capacitor and said second switch is opened to allow current to flow through said second capacitor, when a relatively high charging current is applied to said battery.

* * * * *