IN THE UNITED STATES DISTRICT COURT
FOR THE EASTERN DISTRICT OF TEXAS
MARSHALL DIVISION

MOJO MOBILITY INC. **Plaintiff,** **v.** **SAMSUNG ELECTRONICS CO., LTD., and SAMSUNG ELECTRONICS AMERICA, INC.,** **Defendants.**	**Civil Action No. 2:22-cv-00398-JRG-RSP** **JURY TRIAL**

FIRST AMENDED COMPLAINT

1. Plaintiff Mojo Mobility Inc. ("Mojo Mobility" or "Plaintiff") files this complaint for patent infringement against Defendants Samsung Electronics Co., Ltd. ("SEC") and Samsung Electronics America, Inc. ("SEA") (collectively "Samsung" or "Defendants") for infringement of U.S. Patent No. 7,948,208 ("the '208 patent"), U.S. Patent No. 9,577,440 ("the '440 patent"), U.S. Patent No. 11,292,349 ("the '349 patent"), U.S. Patent No. 11,316,371 ("the '371 patent"), U.S. Patent No. 11,201,500 ("the '500 patent"), U.S. Patent No. 11,342,777 ("the '777 patent") and U.S. Patent No. 11,462,942 ("the '942 patent") (collectively the "patents-in-suit"), pursuant to 35 U.S.C. § 271 (copies of the patents-in-suit are attached as Exhibits A, B, C, D, E, F and G).

I. PARTIES

2. Plaintiff Mojo Mobility is a corporation organized and existing under laws of the State of Delaware. Plaintiff Mojo Mobility has its principal place of business at 3707 Heron Way, Palo Alto, CA 94303.

3. Defendant SEC is a company organized and existing under the laws of the Republic of Korea with a principal place of business located at 129 Samsung-ro, Yeongtong-gu, Suwon-si,

Gyeonggi-do, 443-742 in the Republic of Korea. SEC may be served at least by process under the Hague Convention.

4. Defendant SEA is a New York corporation having a principal place of business at 85 Challenger Road, Ridgefield Park, New Jersey 07660 and is a wholly-owned subsidiary of SEC. SEA may be served via its registered agent, CT Corporation System, 1999 Bryan Street, Suite 900, Dallas, Texas 75201.

5. The patents-in-suit are infringed by various Samsung products, including for example those identified in Section V and all structurally/functionally similar devices. Defendants SEC and SEA are related entities that work in concert to design, manufacture, import, distribute, and/or sell those infringing devices.

II. JURISDICTION AND VENUE

6. This is an action for patent infringement under the patent laws of the United States, 35 U.S.C. §271. This court has federal jurisdiction of such federal question claims pursuant to 28 U.S.C. §§1331 and 1338(a).

7. The Court has personal jurisdiction over each Defendant consistent with the requirements of the Due Process Clause of the United States Constitution and the Texas Long Arm Statute. Each Defendant has regularly and systematically transacted business in Texas, directly or through subsidiaries or intermediaries, and/or committed acts of patent infringement in Texas as alleged more particularly below. Samsung has placed infringing products into the stream of commerce by shipping those products into Texas or knowing that the products would be shipped into Texas. In addition, on information and belief, Samsung's business relating to mobile devices, including devices accused of infringement in this Action, are conducted at its Texas facilities.

8. Venue is proper in this Court pursuant to 28 U.S.C. §§ 1391 and 1400(b).

9. With respect to Defendant SEC, a Korean company, venue is proper because suits against foreign entities are proper in any judicial district, including the Eastern District of Texas.

10. With respect to Defendant SEA, venue is proper in this district under 28 U.S.C. §1400(b) because Defendant SEA has a regular and established place of business in this district and has committed acts of infringement in this district. On information and belief, Defendant SEA has a regular and established place of business in Plano, Texas, and is responsible for importing and selling smartphones, tablets, and other mobile devices and equipment in the United States. On information and belief, Defendant SEA has operated, and on information and belief continues to operate, a permanent office located at 6625 Excellence Way, Plano, TX 75023. Defendant SEA also employs full-time personnel, such as engineers and managers in this district, including in Collin County. On information and belief, Samsung's business operations relating to cellular mobile devices are conducted at these SEA facilities located in this district. Defendant SEA has also committed acts of infringement in this district by commercializing, marketing, selling, distributing, and servicing certain Samsung-branded devices, including but not limited to phones and tablets, which are devices Plaintiff accuses of infringement in this Action.

11. Samsung has admitted that venue is proper in the Eastern District of Texas at least as recently as April 19, 2021. For example, in R2 Solutions, LLC v. Samsung Electronics America, Inc., Samsung admitted that "venue [was] proper as to SEA." Answer at ¶ 8, *R2 Solutions, LLC v. Samsung Electronics America, Inc.*, Case No. 4:21-cv-0089-ALM (E.D. Tex. April 19, 2021) (ECF 14).

III. BACKGROUND

12. Mojo Mobility was founded in 2005 by Dr. Afshin Partovi, who is a named inventor on over 50 patents, including the patents at issue in this case. Dr. Partovi has a Ph.D. in Electrical Engineering and early in his career he worked at NASA Jet Propulsion Labs, after which, he

worked for nearly 10 years at Bell Labs, originally part of AT&T. At Bell Labs, Dr. Partovi worked in Research and Development at the Bell Labs headquarters in Murray Hill, New Jersey where he invented and patented several inventions for Bell Labs. After Bell Labs, Dr. Partovi, with entrepreneurial spirit, founded Mojo Mobility to solve problems and inconvenience presented by mobile devices (including cellular phones) needing specialized charging cables and adapters. Dr. Partovi founded Mojo Mobility to eliminate the need for all the different cables and adapters used for charging a variety of mobile devices by instead inventing and developing novel wireless charging technologies to provide a convenient method for charging mobile and other portable devices.

13. Mojo Mobility, being an early pioneer in the wireless charging field and recognizing the importance of protecting its inventions in wireless charging, applied for patents early on, resulting in the patents-in-suit and many others. Also early on, Mojo Mobility developed and created multiple prototypes of its inventions and presented its prototypes at trade shows and to major electronic device manufacturers including Samsung to develop business relationships for investment and for sales revenue.

14. Samsung showed a significant interest in Mojo Mobility's inventions for several years. Samsung held several discussions with Mojo Mobility over the years. During meetings related to potential investment and business partnerships, Samsung inspected many of Mojo Mobility's prototypes, and requested information on Mojo Mobility's inventions, all the while having been informed and knowing that Mojo Mobility had applied for multiple patents to protect its inventions. Additionally, Samsung requested and received multiple Mojo Mobility prototypes.

15. Samsung even asked Dr. Partovi and other employees at Mojo Mobility in 2013 to travel several times, at Mojo Mobility's expense, to Samsung's headquarters in Suwon, Korea for Mojo Mobility to present its wireless charging technology and prototypes to Samsung's mobile

device engineers and executives. Mojo Mobility did so, thinking and hoping that Samsung would utilize Mojo Mobility's technology in its products in exchange for a commercial business transaction and/or investment and/or use Mojo Mobility's products and services with appropriate payment to Mojo Mobility. At the meetings in 2013, Samsung expressed great interest in Mojo Mobility's technology and requested further detailed testing and reporting of Mojo Mobility's technology with their phones, particularly for its Galaxy line of smartphones. Samsung further requested participation of Mojo Mobility at a Samsung Developers Conference at Samsung's Suwon, Korea main facility to demonstrate Mojo Mobility's technology to Samsung's executives who subsequently directed that Samsung personnel begin an accelerated effort to incorporate Mojo Mobility's technology into the next line of Samsung's Galaxy phones and wireless chargers.

16. However, subsequent discussions between Mojo Mobility and Samsung broke down because Samsung was unwilling to pay for its use of Mojo Mobility's technology. Instead, Samsung suggested that Mojo Mobility should work with Samsung and its third party suppliers on an accelerated program, at Mojo Mobility's own expense, and further suggested that Mojo Mobility should seek payment from third-party component suppliers to integrate Mojo Mobility's technology into Samsung products at no charge to Samsung.

17. Despite knowing that Mojo Mobility held issued patents and pending patent applications on its wireless charging innovations, Samsung has proceeded to incorporate Mojo Mobility's patented innovations into its products, including its Galaxy line of smartphones, without any payment to Mojo Mobility, whether by Samsung itself or by Samsung's component suppliers.

18. Accordingly, Mojo Mobility is forced to bring this lawsuit to seek reasonable compensation for Samsung's use of Mojo Mobility's patented inventions, as required by law, including 35 U.S.C. § 284, which specifies that the patent holder be paid "in no event less than a

reasonable royalty for the use made of the invention by the infringer, together with interest and costs as fixed by the court."

19. Mojo Mobility also seeks a permanent injunction against Samsung's further infringement until Samsung makes reasonable payment for its continuing use of Mojo Mobility's patented inventions.

20. Given Samsung's prior dealings with Mojo Mobility and knowledge of Mojo Mobility's patents, as set forth above, Samsung's infringement has been and continues to be willful. In light of at least this, Mojo Mobility seeks enhanced damages (to "increase the damages up to three times") and an award of attorney fees (as "[t]he court in exceptional cases may award reasonable attorney fees to the prevailing party), as provided by 35 U.S.C. §§ 284, 285.

IV. THE ASSERTED PATENTS

21. On May 24, 2011, the United States Patent and Trademark Office issued U.S. Patent No. 7,948,208, the '208 patent, entitled "Power Source, Charging System, and Inductive Receiver for Mobile Devices," after full and fair examination. Plaintiff is the assignee of all rights, title, and interest in and to the '208 patent and possesses all rights of recovery under the '208 patent, including the right to recover damages for present, past, and future infringement. A true and correct copy of the '208 patent is attached as Exhibit A. The '208 patent is valid and enforceable.

22. On February 21, 2017, the United States Patent and Trademark Office issued U.S. Patent No. 9,577,440, the '440 patent, entitled "Inductive Power Source and Charging System," after full and fair examination. Plaintiff is the assignee of all rights, title, and interest in and to the '440 patent and possesses all rights of recovery under the '440 patent, including the right to recover damages for present, past, and future infringement. A true and correct copy of the '440 patent is attached as Exhibit B. The '440 patent is valid and enforceable.

23. On April 5, 2022, the United States Patent and Trademark Office issued U.S. Patent No. 11,292,349, the ’349 patent, entitled “System and Method for Powering or Charging Receivers or Devices Having Small Surface Areas or Volumes,” after full and fair examination. Plaintiff is the assignee of all rights, title, and interest in and to the ’349 patent and possesses all rights of recovery under the ’349 patent, including the right to recover damages for present, past, and future infringement. A true and correct copy of the ’349 patent is attached as Exhibit C. The ’349 patent is valid and enforceable.

24. On April 26, 2022, the United States Patent and Trademark Office issued U.S. Patent No. 11,316,371, the ’371 patent, entitled “System and Method for Inductive Charging of Portable Devices,” after full and fair examination. Plaintiff is the assignee of all rights, title, and interest in and to the ’371 patent and possesses all rights of recovery under the ’371 patent, including the right to recover damages for present, past, and future infringement. A true and correct copy of the ’371 patent is attached as Exhibit D. The ’371 patent is valid and enforceable.

25. On December 14, 2021, the United States Patent and Trademark Office issued U.S. Patent No. 11,201,500, the ’500 patent, entitled “Efficiencies and Flexibilities in Inductive (Wireless) Charging,” after full and fair examination. Plaintiff is the assignee of all rights, title, and interest in and to the ’500 patent and possesses all rights of recovery under the ’500 patent, including the right to recover damages for present, past, and future infringement. A true and correct copy of the ’500 patent is attached as Exhibit E. The ’500 patent is valid and enforceable.

26. On May 24, 2022, the United States Patent and Trademark Office issued U.S. Patent No. 11,342,777, the ’777 patent, entitled “Powering and/or Charging with More Than One Protocol,” after full and fair examination. Plaintiff is the assignee of all rights, title, and interest in and to the ’777 patent and possesses all rights of recovery under the ’777 patent, including the

right to recover damages for present, past, and future infringement. A true and correct copy of the ’777 patent is attached as Exhibit F. The ’777 patent is valid and enforceable.

27. On October 4, 2022, the United States Patent and Trademark Office issued U.S. Patent No. 11,462,942, the ’942 patent, entitled “Efficiencies and Method Flexibilities in Inductive (wireless) Charging,” after full and fair examination. Plaintiff is the assignee of all rights, title, and interest in and to the ’942 patent and possesses all rights of recovery under the ’942 patent, including the right to recover damages for present, past, and future infringement. A true and correct copy of the ’942 patent is attached as Exhibit G. The ’942 patent is valid and enforceable.

V. CLAIMS FOR PATENT INFRINGEMENT

28. In the interest of providing detailed averments of infringement, Plaintiff has identified below at least one claim per patent-in-suit to demonstrate infringement by at least one product. However, the selection of claims and products below should not be considered limiting, and infringement by Samsung by way of additional claims of the patents-in-suit and additional products will be disclosed in compliance with the Court’s rules related to infringement contentions and/or discovery. The allegations provided below are exemplary and without prejudice to Plaintiff’s infringement contentions to be provided pursuant to the Court’s scheduling order, local rules, and/or discovery procedures. Plaintiff’s claim construction contentions regarding the meaning and scope of the claim terms will be provided under the Court’s scheduling order, local rules, and/or discovery procedures. As detailed below, each element of at least one claim of each of the patents-in-suit is literally present in at least one accused product. To the extent that any element is not literally present, each such element is present under the doctrine of equivalents. Plaintiff’s analysis below should not be taken as an admission and/or contention that the preamble for any claim is or is not limiting. While publicly available information is cited below, Plaintiff may rely on other forms of evidence to show infringement.

29. The accused products include at least the following product models from 2016 to the present, as well as products with reasonably similar functionality and all varieties of these products. Specific identification of the accused products will be provided in plaintiff's infringement contentions pursuant to the Court's scheduling order, local rules, and/or discovery procedures.

- Samsung Galaxy smartphones which can receive wireless power and/or provide wireless power, e.g., most recently the S22 and Z4 series;
- Samsung wireless chargers which can provide wireless power, e.g., Samsung Wireless Charger Pads/Stands, Wireless Charger Portable Batteries, and Galaxy Watch/Fit Wireless Charging Docks;
- Samsung wearable products which can receive wireless power, e.g., the Samsung Galaxy Watch and Fit;
- Samsung earbud products which can receive wireless power, e.g., the Samsung Buds case; and
- Samsung pen charger products which can provide wireless power to a stylus pen, e.g., Samsung Galaxy smartphones, tablets, and laptops, which support and wirelessly charge Samsung stylus pens, e.g., the S22 Ultra with included S Pen; and
- Samsung stylus pens which receive wireless power, e.g., the S Pen.

30. Samsung has directly and indirectly infringed and continues to directly and indirectly infringe the patents-in-suit by engaging in acts constituting infringement under 35 U.S.C. § 271(a), (b), and/or (c), including but not necessarily limited to one or more of making, using, selling and offering to sell, in this district and elsewhere in the United States, and importing into and exporting from the United States, the accused products or components thereof.

31. More particularly, in addition to Samsung's direct infringement, Samsung indirectly infringes the patents-in-suit, as provided in 35 U.S.C. § 271(b), by inducing infringement by others, such as Samsung's customers and end-users, in this district and elsewhere in the United States. For example, Samsung's customers and end-users directly infringe through their use of the inventions claimed in the patents-in-suit. Samsung induces this direct infringement through its affirmative acts of manufacturing, selling, distributing, and/or otherwise making available the accused products, and providing instructions, documentation, and other information to customers and end-users suggesting they use the accused products in an infringing manner, including in-store technical support, online technical support, marketing, product manuals, advertisements, and online documentation. Samsung performs these affirmative acts with knowledge, or willful blindness, of the patents-in-suit and with the intent, or willful blindness, that the induced acts directly infringe the patents-in-suit.

32. Furthermore, Samsung also indirectly infringes the patents-in-suit, as provided by 35 U.S.C. § 271(c), by contributing to direct infringement committed by others, such as customers and end-users, in this district and elsewhere in the United States. Samsung's affirmative acts of selling and offering to sell, in this district and elsewhere in the United States, the accused products and causing the accused products to be manufactured, used, sold, and offered for sale contribute to Samsung's customers and end-users use of the accused products, such that the patents-in-suit are directly infringed. The accused components within the accused products are material to the claimed inventions of the patents-in-suit, are not staple articles or commodities of commerce, have no substantial non-infringing uses, and are known by Samsung to be especially made or adapted for use in the infringement of the patents-in-suit. Samsung performs these affirmative acts with knowledge, or willful blindness, of the patents-in-suit and with intent, or willful blindness, that they cause the direct infringement of the patents-in-suit.

33. To the extent Samsung disagrees that it has the adequate knowledge to induce infringement by its customers, it is incorrect. It is well settled law in the Eastern District of Texas that "[t]he Complaint—and the service thereof—therefore provides Samsung the requisite notice of the Asserted Patents to support a claim of induced infringement at least as of the time the Complaint was filed." *RightQuestion, LLC. v. Samsung Electronics, et. al,* Case No. 2:21-CV-00238, Dkt. 53 at 4 (E.D. Tex. Feb. 18, 2022) (Gilstrap, J.) (denying motion to dismiss induced infringement claims) (citing *BillJCo, LLC v. Cisco Sys., Inc.*, No. 2:21-cv-183, 2021 WL 6618529, at *6 (E.D. Tex. Nov. 30, 2021)).

34. Samsung's acts of infringement have caused damage to Mojo Mobility. Mojo Mobility is entitled to recover from Samsung the damages sustained by Mojo Mobility as a result of Samsung's wrongful acts in an amount subject to proof at trial.

35. Samsung's infringement of the patents-in-suit has been and is willful. Samsung has had knowledge of the patents-in-suit and its infringement thereof prior to the filing of this lawsuit and/or has been willfully blind thereof. Samsung has committed and continues to commit acts of infringement despite a high likelihood that its actions constitute infringement, and Samsung knew or should have known that its actions constituted an unjustifiably high risk of infringement.

COUNT ONE: PATENT INFRINGEMENT OF THE '208 PATENT

36. Mojo Mobility incorporates by reference the preceding paragraphs as if fully stated herein.

37. Claim 1 of the '208 patent is reproduced below:

> 1. A charger system for use with a mobile, electronic, or other device and/or battery, battery door, or skin for use with the device, for charging and/or powering the device and/or battery inductively, comprising:
>
> a base unit having a surface, and comprising a plurality of primary coils arranged behind and parallel to the surface,
>
> wherein each of the primary coils is positioned within the base unit, and

wherein each of the primary coils is associated with a switching circuit in the base unit, which switching circuit is capable of being selectively switched to activate its associated primary coil so that, when an electrical current is passed through that activated primary coil, a magnetic field is generated by that activated primary coil in a direction substantially perpendicular to the surface of the base unit, and

wherein the base unit and/or switching circuit includes a capacitive or other component that decreases harmonics in that activated primary coil;

a power supply for passing a current through the primary coils when activated, to generate the magnetic field in a direction substantially perpendicular to the plane of the primary coils;

a communications interface that the base unit, and the mobile, electronic, or other device and/or battery, battery door, or skin for use with the device, use to communicate with one another during powering or charging, to

poll each of the primary coils, or receive a signal from a sensor associated therewith, to verify the presence of the mobile, electronic, or other device and/or battery, battery door, or skin for use with the device placed upon or close to the surface of the base unit,

select, based on the polling or sensing, from within the plurality of primary coils, and selectively switch, using their associated switching circuits to activate, only those one or more primary coils which are determined to be most closely aligned with a receiver coil at the mobile, electronic, or other device and/or battery, battery door, or skin for use with the device, and

periodically thereafter exchange information to provide power transfer to the device and/or battery, including device and/or battery charging or power status or presence; and

wherein the substantially perpendicular magnetic field is used to inductively generate a current in the receiver coil within or on the mobile, electronic, or other device and/or battery, battery door, or skin for use with the device placed upon the activated primary coil of the base unit, to charge or power the device and/or battery, and

wherein the base unit, and receiver coil or circuitry associated therewith, use current modulation performed by the receiver coil or its circuitry, to provide an indication that is then used by the base unit to

determine and regulate one or more of output voltage, current, or power provided by the base unit to the device and/or battery to be within the range of one or more of a value of a required voltage, current, or other

power parameter for the mobile, electronic, or other device and/or battery, battery door, or skin for use with the device, and/or

verify the continued presence of the receiver coil near the base unit.

38. Samsung accused products which can provide wireless power with multiple charging coils as specified by claim 1 infringe the claim. This includes Samsung wireless chargers. Samsung accused products that infringe claim 1 (and/or any other claims in the patent) are herein collectively the "'208 accused products." In the following, infringement by way of the Samsung Wireless Charger Duo Pad EP-P5200 ("5200 Duo"), the Samsung Wireless Charger Duo Pad EP-P5400 ("5400 Duo"), and the Samsung Wireless Charger Trio Pad EP-P6300 ("6300 Trio") is illustrated to provide non-limiting examples of Samsung's infringement of the '208 patent.

39. '208 claim 1 begins, "A charger system for use with a mobile, electronic, or other device and/or battery, battery door, or skin for use with the device, for charging and/or powering the device and/or battery inductively, comprising." As non-limiting examples, the 5200 Duo, 5400 Duo, and 6300 Trio chargers fit this description.

40. The 5200 Duo can wirelessly charge various mobile devices. https://www.samsung.com/us/mobile/mobile-accessories/phones/wireless-charger-Duo-pad-black-ep-p5200tbegus/

Qi certified

The Wireless Charger Duo Pad is Qi certified meaning any Qi compatible products can charge on it, including the Samsung Galaxy S10, Galaxy Note9, Apple iPhone 8, iPhone X, and Google Pixel 3 .

41. The 5400 Duo can wirelessly charge various mobile devices. https://www.samsung.com/us/mobile/mobile-accessories/phones/15w-wireless-charger-Duo-cable-dark-gray-ep-p5400cbegus/

42. The 6300 Trio can wirelessly charge various mobile devices. https://www.samsung.com/us/mobile/mobile-accessories/phones/wireless-charger-pad-trio-white-ep-p6300twegus/#overview

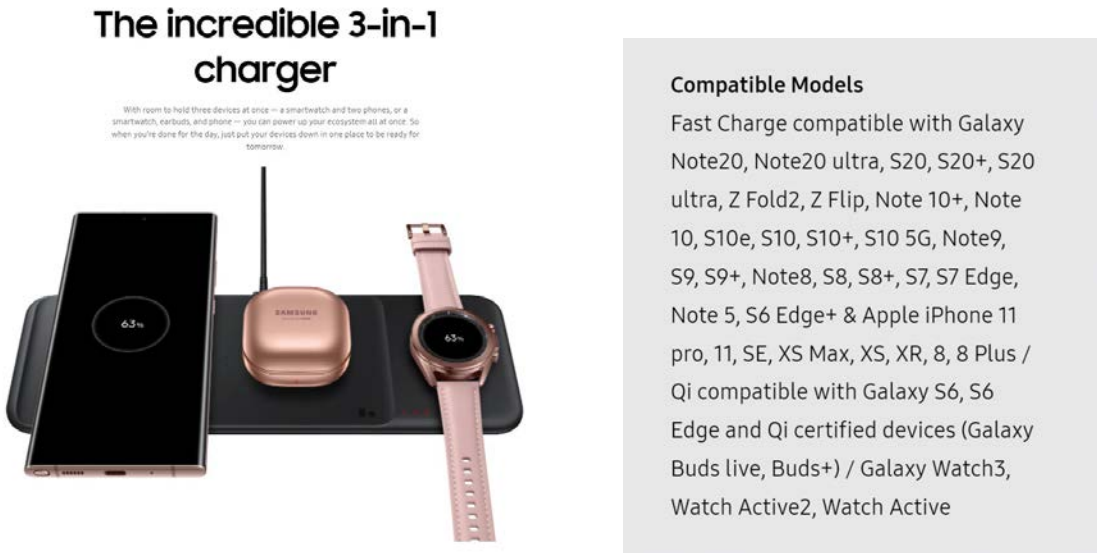

43. ’208 claim 1 further recites “a base unit having a surface, and comprising a plurality of primary coils arranged behind and parallel to the surface, wherein each of the primary coils is positioned within the base unit, and wherein each of the primary coils is associated with a switching circuit in the base unit, which switching circuit is capable of being selectively switched to activate its associated primary coil so that, when an electrical current is passed through that activated primary coil, a magnetic field is generated by that activated primary coil in a direction substantially perpendicular to the surface of the base unit, and wherein the base unit and/or switching circuit includes a capacitive or other component that decreases harmonics in that activated primary coil.” As non-limiting examples, the 5200 Duo, 5400 Duo, and 6300 Trio chargers meet this part of the claim. They each comprise a base unit with a surface for wireless charging with multiple coils and associated switching circuits as specified by this part of the claim.

44. The 5200 Duo is a dual location wireless charger system that allows simultaneous charging of up to two devices, e.g., one or two smartphones or a smartphone and a Galaxy watch or earbud case.

45. The 5200 Duo includes three charging coils (identified as antennas [Ant. 1-3] in the images below), of which the two on the right side of the product (Ant. 2 and 3) of the pad are concentric (for charging a watch, another smartphone or earbud case) (Ant. 2 and 3 are shown on the left-side of the FCC pictures below, which pictures have inverted the coil sides). Antenna 1 on

the left side of the product (right side of the FCC pictures) is for charging of a smartphone at up to Samsung Wireless Fast Charge 2.0 speeds.

46. The following FCC pictures show the three charging coils in the 5200 Duo (Ant. 1-3).

https://fcc.report/FCC-ID/A3LEPP5200/4144771

SGS

Top view of PCB

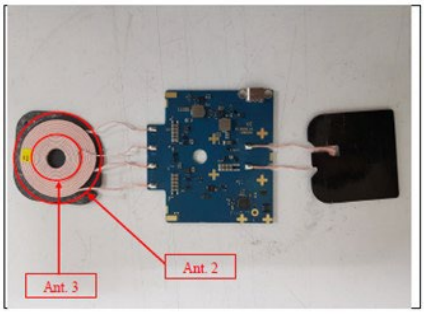

Bottom view of PCB

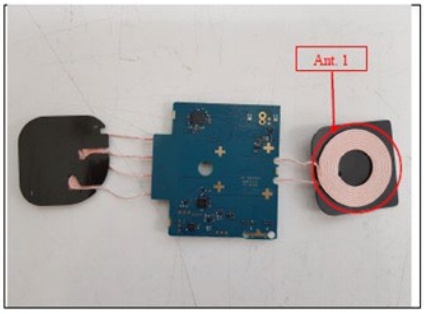

47. The following is a Samsung webpage describing the 5200 Duo.

https://www.samsung.com/us/mobile/mobile-accessories/phones/wireless-charger-Duo-pad-black-ep-p5200tbegus/

Charge a phone and a smartwatch

The Wireless Charger Duo Pad can charge your Samsung smartwatch too. Gear S3, Gear Sport, and Galaxy Watch can charge in the same location as your phone by simply placing your watch on the charging pad.

Charge two phones

Charge up to two smartphones by simply setting them down. Advanced Qi wireless charging technology enables you to charge your device without plugging in a cable.[2]

48. The following is a Samsung Quick Start Guide describing the 5200 Duo.

https://fcc.report/FCC-ID/A3LEPP5200/4144766.pdf

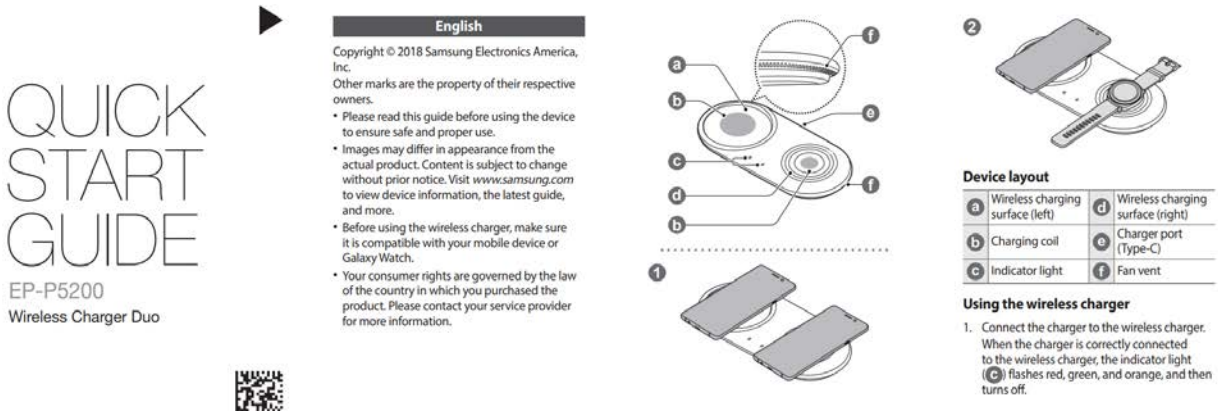

QUICK START GUIDE

EP-P5200

Wireless Charger Duo

English

Copyright © 2018 Samsung Electronics America, Inc.
Other marks are the property of their respective owners.

- Please read this guide before using the device to ensure safe and proper use.
- Images may differ in appearance from the actual product. Content is subject to change without prior notice. Visit *www.samsung.com* to view device information, the latest guide, and more.
- Before using the wireless charger, make sure it is compatible with your mobile device or Galaxy Watch.
- Your consumer rights are governed by the law of the country in which you purchased the product. Please contact your service provider for more information.

Device layout

a	Wireless charging surface (left)	d	Wireless charging surface (right)
b	Charging coil	e	Charger port (Type-C)
c	Indicator light	f	Fan vent

Using the wireless charger

1. Connect the charger to the wireless charger. When the charger is correctly connected to the wireless charger, the indicator light (c) flashes red, green, and orange, and then turns off.

49. The 5200 Duo includes multiple switching circuits associated with its coils which include capacitors to reduce harmonics (green rectangles), wireless charging ASICs (e.g., IDT P9236) (red rectangles), field effect transistors (FETs) and FET drivers (tan rectangles), as illustrated below.

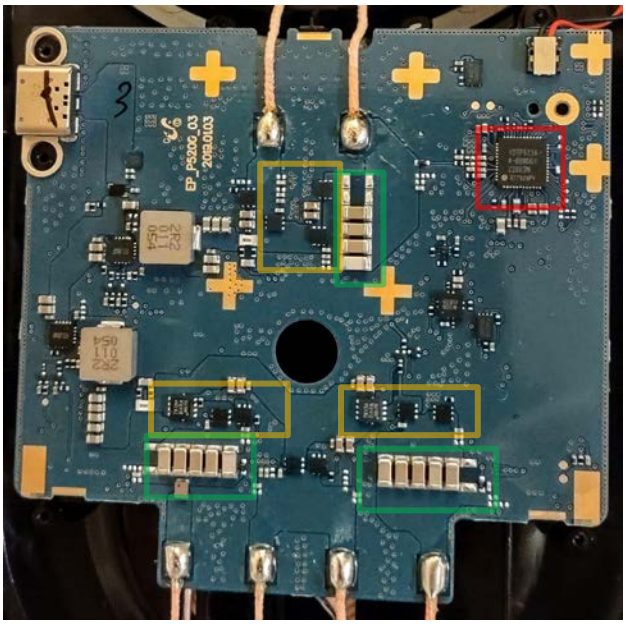

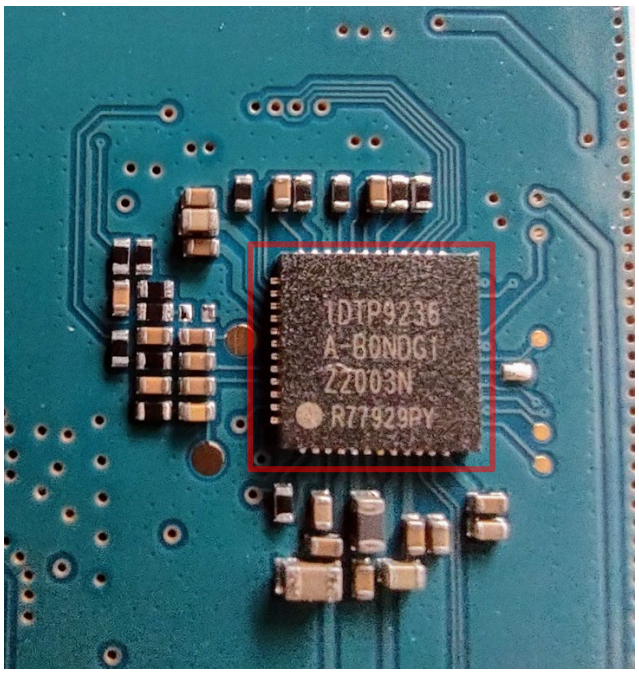

50. The 5400 Duo includes three charging coils of which the two on the right side of the pad are concentric (for charging a watch or an earbud case), as shown below.

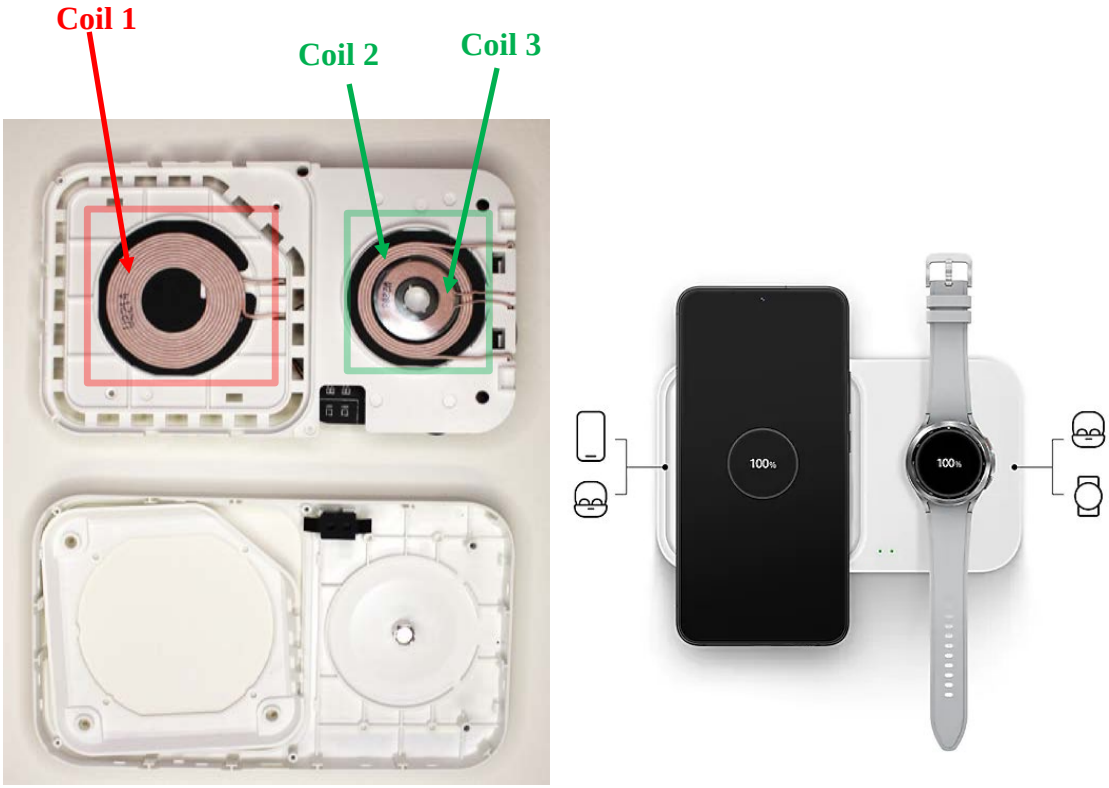

51. The 5400 Duo includes multiple switching circuits associated with its coils which include capacitors to reduce harmonics (green rectangles), wireless charging ASICs (e.g., IDT P9236) (red rectangles), FETs and FET drivers (blue boxes), as illustrated below.

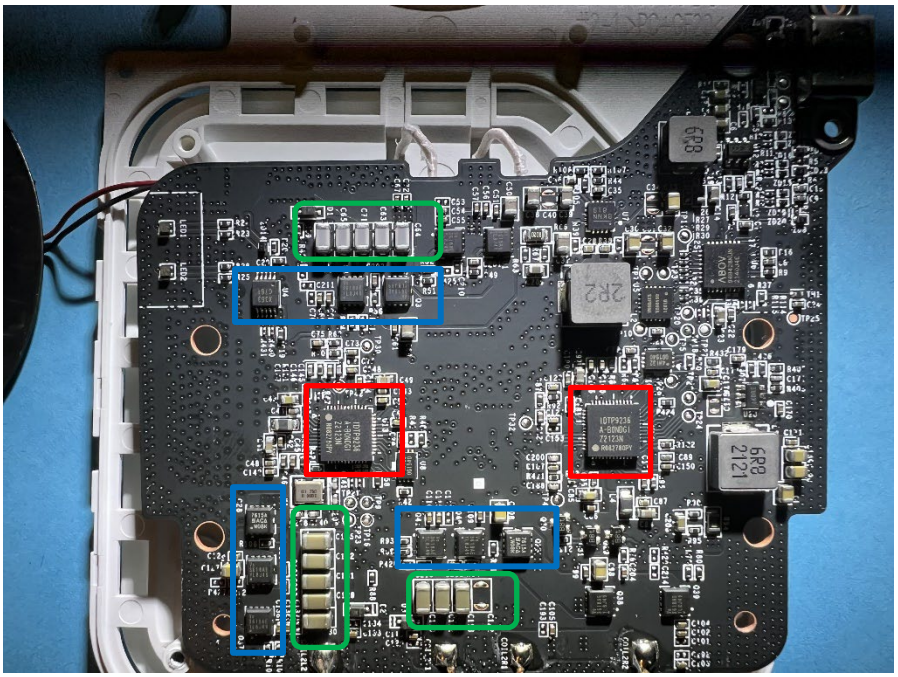

52. The 6300 Trio includes seven charging coils (Ant. 1-7), of which the six on the left side of the pad are overlapping, as shown below.

https://fcc.report/FCC-ID/A3LEPP6300/4940796.pdf

View of Antenna

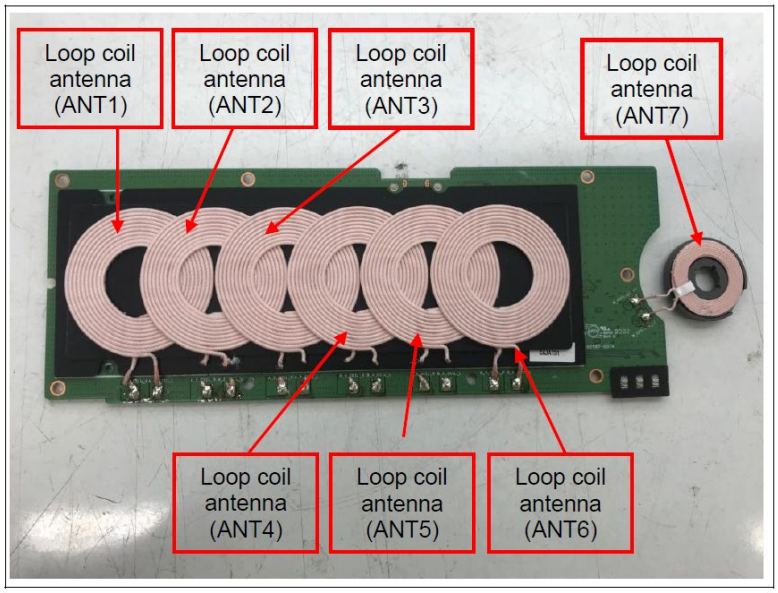

j

53. The 6300 Trio includes switching circuits associated with its coils which include capacitors to reduce harmonics (white rectangles), IDT/Renesas wireless charging ASICs (e.g., IDT P9236) (red rectangles), FET drivers (yellow rectangles), and FETs (blue rectangles), as seen below.

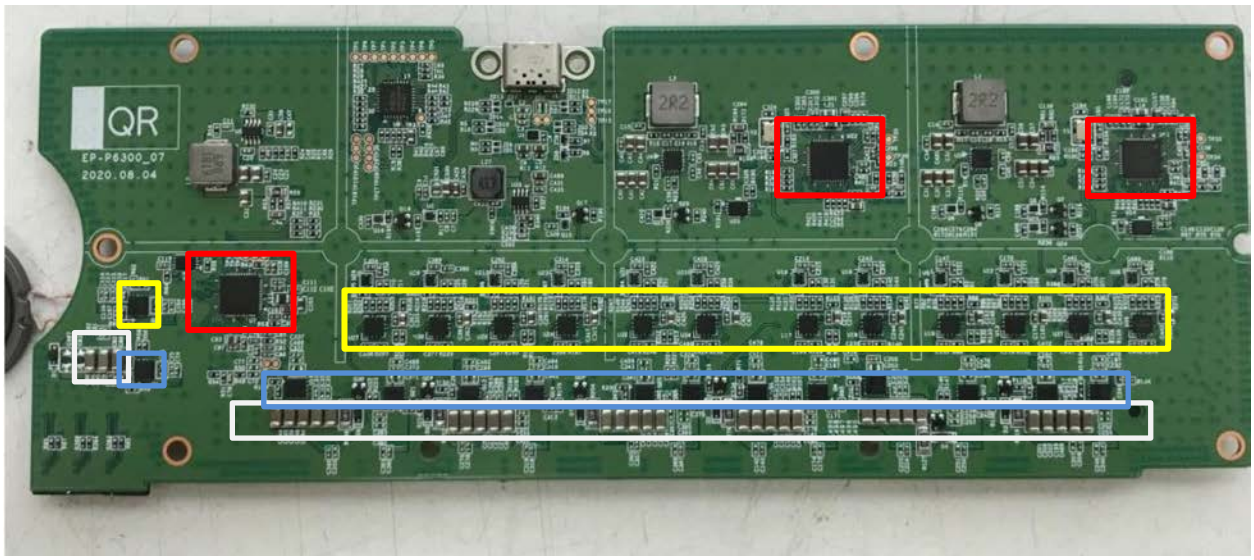

54. The magnetic field generated by the charging coils in the Samsung chargers shown above is substantially perpendicular to the plane of the coils. E.g., WPC 1.2.4 Standard, Introduction, page 9 (shown above with respect to the "base unit" part of '208 claim 1).

When charging begins, the power transmitter runs an alternating electrical current through its coil(s), which generates an alternating magnetic field in accordance with Faraday's law. This magnetic field is in turn picked up by the coil inside the power receiver and transformed by a power converter back into an alternating electrical current that can be used to charge the battery.

A critical feature of the magnetic field is that it can transfer through any non-metallic, non-ferrous materials, such as plastics, glass, water, wood, and air. In other words, wires and connectors are not needed between the power transmitter and power receiver.

Figure 6. Qi wireless power transfer using magnetic induction

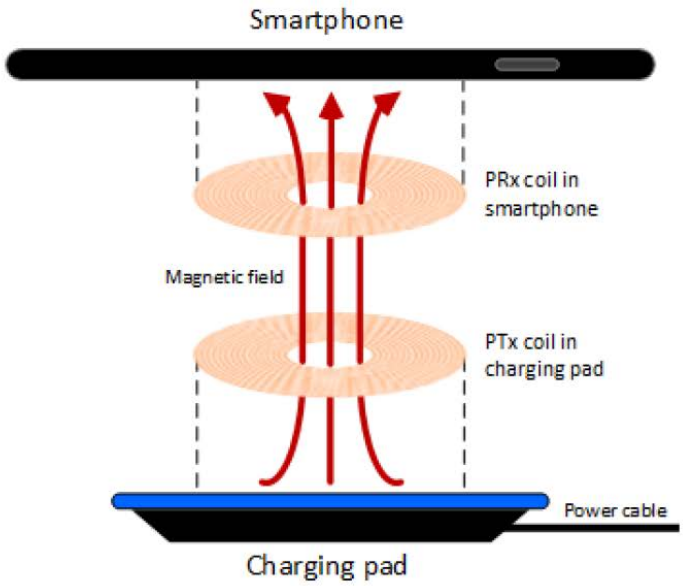

Wireless Power Consortium

9

55. '208 claim 1 further recites "a power supply for passing a current through the primary coils when activated, to generate the magnetic field in a direction substantially perpendicular to the plane of the primary coils." As non-limiting examples, the 5200 Duo, 5400 Duo, and 6300 Trio chargers meet this part of the claim, as they each have an internal and/or external power supply, powered by an AC source (e.g., AC wall power), to provide the needed DC

voltage coupled by the switching circuits to the wireless charging coils for passing a current through the coils for inductive power transfer.

56. The 5200 Duo, 5400 Duo, and 6300 Trio chargers each has an internal power supply for passing a current through the primary coil(s) when activated that is powered by an external power supply (typically an AC/DC power adaptor drawing AC power from a wall outlet). https://www.samsung.com/us/mobile/mobile-accessories/phones/wireless-charger-duo-pad-black-ep-p5200tbegus/

https://www.samsung.com/us/mobile/mobile-accessories/phones/15w-wireless-charger-Duo-cable-dark-gray-ep-p5400cbegus/

https://www.samsung.com/us/mobile/mobile-accessories/phones/wireless-charger-pad-trio-white-ep-p6300twegus/#overview

57. ’208 claim 1 further recites “a communications interface that the base unit, and the mobile, electronic, or other device and/or battery, battery door, or skin for use with the device, use to communicate with one another during powering or charging, to poll each of the primary coils, or receive a signal from a sensor associated therewith, to verify the presence of the mobile, electronic, or other device and/or battery, battery door, or skin for use with the device placed upon or close to the surface of the base unit, select, based on the polling or sensing, from within the plurality of primary coils, and selectively switch, using their associated switching circuits to activate, only those one or more primary coils which are determined to be most closely aligned with a receiver coil at the mobile, electronic, or other device and/or battery, battery door, or skin for use with the device, and periodically thereafter exchange information to provide power transfer to the device and/or battery, including device and/or battery charging or power status or presence; and wherein the substantially perpendicular magnetic field is used to inductively generate a current in the receiver coil within or on the mobile, electronic, or other device and/or battery, battery door, or skin for use with the device placed upon the activated primary coil of the base unit, to charge or power the device and/or battery, and wherein the base unit, and receiver coil or circuitry associated therewith, use current modulation performed by the receiver coil or its circuitry, to

provide an indication that is then used by the base unit to determine and regulate one or more of output voltage, current, or power provided by the base unit to the device and/or battery to be within the range of one or more of a value of a required voltage, current, or other power parameter for the mobile, electronic, or other device and/or battery, battery door, or skin for use with the device, and/or verify the continued presence of the receiver coil near the base unit." As non-limiting examples, the 5200 Duo, 5400 Duo, and 6300 Trio chargers meet this part of the claim.

58. The 5200 Duo, 5400 Duo, and 6300 Trio chargers meet this part of the claim by way of an included communication interface (comprising for example an included IDT/Renesas wireless power ASIC and associated external circuitry) to communicate by way of current modulation through the primary coils during wireless power transfer to poll/sense with respect to multiple overlapping and/or concentric coils to determine a most aligned coil, to then activate that coil(s) for wireless power transfer, to regulate the power transfer through closed loop feedback, and to verify the continued presence of the mobile device being charged. For example, these products do so to be interoperable with the Wireless Power Consortium (WPC) standard (aka Qi standard) ("WPC Standard").

https://www.samsung.com/us/mobile/mobile-accessories/phones/wireless-charger-Duo-pad-black-ep-p5200tbegus/

Qi certified

The Wireless Charger Duo Pad is Qi certified meaning any Qi compatible products can charge on it, including the Samsung Galaxy S10, Galaxy Note9, Apple iPhone 8, iPhone X, and Google Pixel 3 .

https://www.amazon.com/gp/product/B09MV3BRHC/ref=ask_ql_qh_dp_hza?th=1

This item Samsung 15W Wireless Charger Duo (w/TA), Black

Add to Cart

Customer Rating	★★★★☆ (40)
Price	$78.28
Shipping	FREE Shipping. Details
Sold By	Amazon.com
Color	Black
Compatible Phone Models	Samsung Galaxy S10, Apple iPhone X, Samsung Galaxy Note 10

https://www.samsung.com/us/mobile/mobile-accessories/phones/wireless-charger-pad-trio-white-ep-p6300twegus/#overview

The incredible 3-in-1 charger

With room to hold three devices at once — a smartwatch and two phones, or a smartwatch, earbuds, and phone — you can power up your ecosystem all at once. So when you're done for the day, just put your devices down in one place to be ready for tomorrow.

Compatible Models

Fast Charge compatible with Galaxy Note20, Note20 ultra, S20, S20+, S20 ultra, Z Fold2, Z Flip, Note 10+, Note 10, S10e, S10, S10+, S10 5G, Note9, S9, S9+, Note8, S8, S8+, S7, S7 Edge, Note 5, S6 Edge+ & Apple iPhone 11 pro, 11, SE, XS Max, XS, XR, 8, 8 Plus / Qi compatible with Galaxy S6, S6 Edge and Qi certified devices (Galaxy Buds live, Buds+) / Galaxy Watch3, Watch Active2, Watch Active

https://www.wirelesspowerconsortium.com/products/5489

SAMSUNG ELECTRONICS WIRELESS CHARGER (EP-P5200)

BRAND
Samsung Electronics

PRODUCT NAME
Wireless Charger

MANUFACTURER PART NUMBER
EP-P5200

PRODUCT TYPE
Power Class 0 Transmitter

REGISTRATION DATE
March 4, 2019

ADDITIONAL DETAILS

Qi Registration id	5489
Version	1.2.4
Currently licensed	Yes
Power profile	Basic Power Profile
Transmitter design	A11a
Automotive Charger for inline assembly	No
Compliant Automotive Guidelines	No
Evaluation module	No
Potential power level	5 watts
Subsystem for integration in other products	No

Do you have a comment or complaint about this product?

Tell us

59. As relevant to this part of the claim, the 5200 Duo, 5400 Duo and 6300 Trio chargers include wireless power transmitter ASICs (e.g., IDT/Renesas IDT P9236) for wireless power transfer.

60. As shown below, the representative IDT P9236 ASIC includes a demodulator (blue box) and microcontroller (green box). The demodulator senses current modulation in the charger coil to detect a communication from the receiver being charged and to also sense the presence or absence of the receiver. The microcontroller in the ASIC controls the operation of the charger system.

https://archive.eetindia.co.in/www.eetindia.co.in/ART_8800706913_1800008_NP_7a10c6fc.HTM

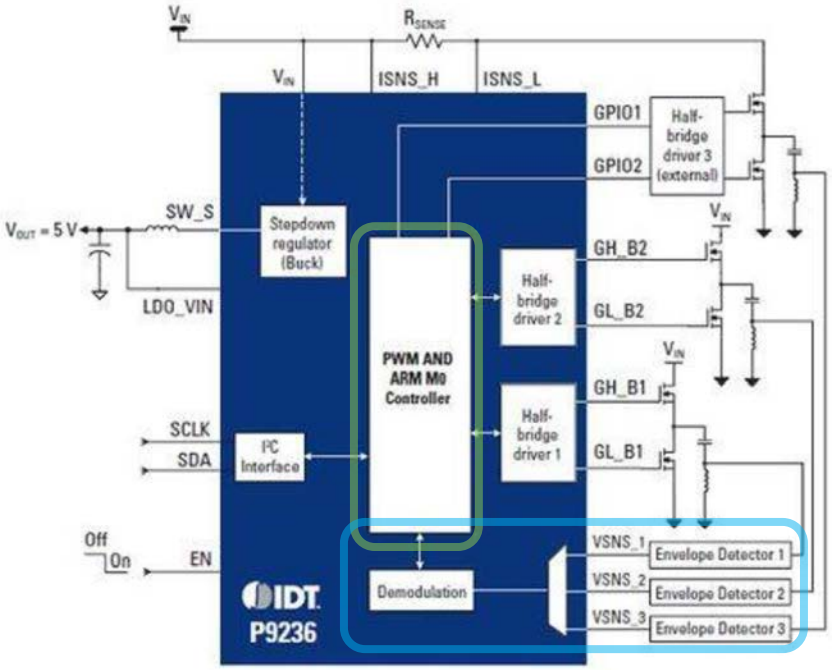

61. To be compatible with the WPC Standard, the 5200 Duo, 5400 Duo, and 6300 Trio chargers meet the communication, selection, and control aspects of this part of the claim, for example as illustrated by the following excerpts of the WPC Standard. E.g., The Qi Wireless Power Transfer System Power Class 0 Specification, WPC 1.2.4 Standard, Parts 1 and 2: Interface

Definitions (February 2018), pages 87, 46, 93, 152, 50 and 82 ("WPC 1.2.4 Standard, Parts 1 and 2, Interface Definitions").

62. To be compatible with the WPC Standard, the 5200 Duo, 5400 Duo, and 6300 Trio chargers receive communication via current modulation by the device to be wirelessly charged, as reflected below. WPC 1.2.4 Standard, Parts 1 and 2, Interface Definitions, page 87.

5.2 Power Receiver to Power Transmitter communications interface

5.2.1 Introduction

The Power Receiver communicates to the Power Transmitter using backscatter modulation. For this purpose, the Power Receiver modulates the amount of power that it draws from the Power Signal. The Power Transmitter detects this as a modulation of the current through and/or voltage across the Primary Cell. In other words, the Power Receiver and Power Transmitter use an amplitude modulated Power Signal to provide a Power Receiver to Power Transmitter communications channel.

63. To be compatible with the WPC Standard, the 5200 Duo, 5400 Duo, and 6300 Trio chargers receive communications from the device to be wirelessly charged to identify the device to be charged, to configure the wireless power transfer, and to conduct the wireless power transfer, as reflected below. WPC 1.2.4 Standard, Parts 1 and 2, Interface Definitions, page 46.

- *ping* In this phase, the Power Transmitter executes a Digital Ping, and listens for a Response. If the Power Transmitter discovers a Power Receiver, the Power Transmitter may extend the Digital Ping, i.e. maintain the Power Signal at the level of the Digital Ping. This causes the system to proceed to the *identification & configuration* phase. If the Power Transmitter does not extend the Digital Ping, the system shall revert to the *selection* phase.
- *identification & configuration* In this phase, the Power Transmitter identifies the selected Power Receiver, and obtains configuration information such as the maximum amount of power that the Power Receiver intends to provide at its output. The Power Transmitter uses this information to create a Power Transfer Contract. This Power Transfer Contract contains limits for several parameters that characterize the power transfer in the *power transfer* phase. At any time before proceeding to the *power transfer* phase, the Power Transmitter may decide to terminate the extended Digital Ping (for example, to discover additional Power Receivers). This reverts the system to the *selection* phase.
- *power transfer* In this phase, the Power Transmitter continues to provide power to the Power Receiver, adjusting its Primary Cell current in response to control data that it receives from the Power Receiver. Throughout this phase, the Power Transmitter monitors the parameters that are contained in the Power Transfer Contract. A violation of any of the stated limits on any of those parameters causes the Power Transmitter to abort the power transfer, and returns the system to the *selection* phase. Finally, the system may also leave the *power transfer* phase on request of the Power Receiver. Section 5.1.2 defines the system control protocols in the *ping, identification & configuration,* and *power transfer* phases from a Power Transmitter perspective. Section 5.1.3 defines the system control protocols in these four phases from a Power Receiver perspective.

NOTE This version of the Specification does not define the system control protocol in the *selection* phase.

NOTE From a power transfer point of view, the Power Receiver remains passive throughout most of the *selection* phase.

At any time, a user can remove a Mobile Device that is receiving power. The Power Transmitter can recognize such an event from a time-out in the communications from the Power Receiver, or from a violation of the Power Transfer Contract. As a result, the Power Transmitter aborts the power transfer and the system reverts to the *selection* phase.

Throughout the *power transfer* phase, the Power Transmitter and Power Receiver control the amount of power that is transferred. Figure 17 illustrates a schematic diagram of the power transfer control loop, which basically operates as follows: the Power Receiver selects a desired Control Point: a desired output current and/or voltage, a temperature measured somewhere in the Mobile Device, etc. In addition, the Power Receiver determines its actual Control Point. The Power Receiver may use any approach to determine a Control Point. Moreover, the Power Receiver may change this approach at any time during the *power transfer* phase. Using the desired Control Point and actual Control Point, the Power Receiver calculates a Control Error Value—for example, by simply taking the (relative) difference of the two output voltages or currents. The result is negative if the Power Receiver requires less power in order to reach its desired Control Point and positive if the Power Receiver requires more power in order to reach its desired Control Point. Subsequently, the Power Receiver transmits this Control Error Value to the Power Transmitter.

64. To be compatible with the WPC Standard, the 5200 Duo, 5400 Duo, and 6300 Trio chargers receive Signal Strength Packet communications from the device to be wirelessly charged to identify a charging coil most aligned with the device to be charged, as reflected below. WPC 1.2.4 Standard, Parts 1 and 2, Interface Definitions, pages 93 and 152.

5.2.3 Logical layer (PRx to PTx)

This section defines the format of the messages used by the Power Receiver to Power Transmitter communications interface.

5.2.3.1 Signal Strength Packet (0x01)

Table 27 defines the format of the message contained in a Signal Strength Packet.

Table 27. Signal strength

	b_7	b_6	b_5	b_4	b_3	b_2	b_1	b_0
B_0	Signal Strength Value							

Signal Strength Value. The unsigned integer value in this field indicates the degree of coupling between the Primary Cell and Secondary Coil, with the purpose to enable Power Transmitters that use Free Positioning to determine the Primary Cell that provides optimum power transfer (see also Annex B, *Power Receiver Localization (Informative)*). To determine the degree of coupling, the Power Receiver shall monitor the value of a suitable variable during a Digital Ping. Examples of such variables are:

- The rectified voltage.
- The open circuit voltage (as measured at the output disconnect switch).
- The received Power (if the rectified voltage is actively or passively clamped during a Digital Ping).

B.2 Primary Coil array based Free Positioning

In the case of Free Positioning, discovery and localization of a Power Receiver is less straightforward. This Annex B.2 discusses one sample approach, which is particularly suited to a Primary Coil array-based Power Transmitter. In this approach, the Power Transmitter first discovers and locates the objects that are present on its Interface Surface (e.g. using any of the methods discussed in Section 10, *Object Detection (Informative)*). This results in a set of Primary Cells, which represents the locations of potential Power Receivers. For each of the Primary Cells in this set, the Power Transmitter executes a Digital Ping (see Section 5.1.2.2), removing the Power Signal after receipt of a Signal Strength Packet (or an End Power Transfer Packet, or after a time out).[14] This yields a new set of Primary Cells, namely those that report a Signal Strength Value above a certain threshold—which the Power Transmitter chooses. Finally, the Power Transmitter executes an extended Digital Ping (see Sections 5.1.2.2 and 5.1.2.3) for each of the Primary Cells in this new set in order to identify the discovered Power Receivers. The Power Transmitter should take the situations discussed in Annex B.2.1, B.2.2, and B.2.3 into account in order to select the most appropriate Primary Cells from the set for power transfer.

65. To be compatible with the WPC Standard, the 5200 Duo, 5400 Duo, and 6300 Trio chargers receive communications from the device to be wirelessly charged to control the power transfer with close loop feedback control, as reflected below. WPC 1.2.4 Standard, Parts 1 and 2, Interface Definitions, pages 50 and 82.

6. *Power transfer* phase. Section 5.1.2.6 defines the part of the protocol that the Power Transmitter shall execute during power transfer. In this part of the protocol, the Power Transmitter controls its Primary Cell current in response to control data received from the Power Receiver.

- The first Control Error Packet shall start within the time window t_{interval} after the start of the Configuration Packet. A next Control Error Packet shall start within the time window t_{interval} after the start of the preceding Control Error Packet. As an additional constraint, the average of the time t_{interval} between consecutive Control Error Packets shall be at most 260 ms.

66. That the 5200 Duo, 5400 Duo, and 6300 Trio chargers meet this part of the claim is also indicated by the WPC Standard Reference Designs. The Qi Wireless Power Transfer System Power Class 0 Specification, Version 1.2.4, Part 4: Reference Designs (February 2018), page 31 ("WPC 1.2.4 Standard, Part 4, Reference Designs").

2.2.4 Power Transmitter design A4

Power Transmitter design A4 enables Free Positioning. Figure 10 illustrates the functional block diagram of this design, which consists of two major functional units, namely a Power Conversion Unit and a Communications and Control Unit.

Figure 10. Functional block diagram of Power Transmitter design A4

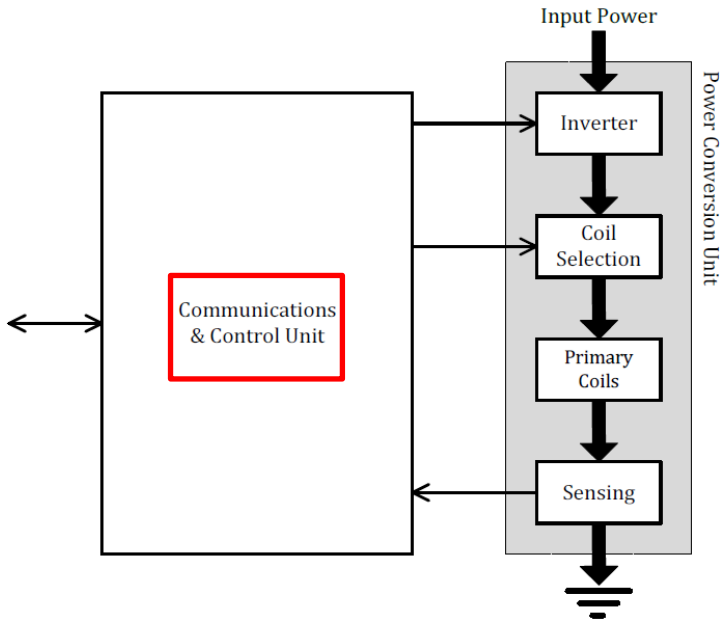

The Power Conversion Unit on the right-hand side of Figure 10 and the Detection Unit of the bottom of Figure 10 comprise the analog parts of the design. The inverter converts the DC input to an AC waveform that drives a resonant circuit, which consists of the selected Primary Coil plus a series capacitor. The selected Primary Coil is one from two partially overlapping Primary Coils, as appropriate for the position of the Power Receiver relative to the two Primary Coils. Selection of the Primary Coil proceeds by the Power Transmitter attempting to establish communication with a Power Receiver using either Primary Coil. Finally, the voltage sense monitors the Primary Coil voltage and current.

The Communications and Control Unit on the left-hand side of Figure 10 comprises the digital logic part of the design. The Communications and Control Unit receives and decodes messages from the Power Receiver, configures the Coil Selection block to connect the appropriate Primary Coil, executes the relevant power control algorithms and protocols, and drives the input voltage of the AC waveform to control the power transfer. The Communications and Control Unit also interfaces with other subsystems of the Base Station, e.g. for user interface purposes.

67. The above provides non-limiting examples of Samsung's infringement of claim 1 of the '208 patent. As asserted in this action, Samsung infringes additional claims in the '208 patent, including for example claims 3 and 5, with the specific infringement contentions to be presented in discovery per the Court's procedure.

COUNT TWO: PATENT INFRINGEMENT OF THE '440 PATENT

68. Mojo Mobility incorporates by reference the preceding paragraphs as if fully stated herein.

69. Claims 1 and 3 of the '440 patent are reproduced below:

1. A mobile device capable of inductive powering or charging by a universal base unit for charging of different mobile devices and/or batteries of different charging characteristics associated therewith, comprising:

    a battery, wherein one or both of a mobile device and the battery have particular charging characteristics associated therewith;

    a receiver and receiver coil, for one of inductively powering the device or charging the battery in the mobile device, wherein the receiver is one of attached to or incorporated into the battery or the mobile device, and wherein the receiver coil has a generally planar shape so that a magnetic field received in a direction substantially perpendicular to the plane of the receiver coil is used to inductively generate a current in the receiver coil;

    an identification component associated with the mobile device or battery, which is configured to provide wireless identification of the receiver to the universal base unit;

    a means for avoiding overcharging one or both of the mobile device and battery inductively; and

    a regulator, coupled to the output of the receiver or to the battery, that regulates an output voltage or output current provided by the receiver, to the mobile device or battery, to be within a range of parameters for the mobile device or the battery;

    wherein different mobile devices and batteries can have different charging characteristics associated therewith; and

    wherein the receiver communicates with the base unit to

        detect, identify and authenticate the receiver with the base unit, as provided by the identification component,

determine and then activate one or more primary coils of the base unit which are aligned with the receiver coil,

verify the continued presence of the receiver near the base unit, and

communicate information describing the characteristics of the mobile device or the battery, for use by the base unit to provide power transfer to the receiver and to the mobile device and the battery according to their particular charging characteristics.

3. A system for use with a mobile device for charging or powering the mobile device inductively by a universal base unit for charging of different mobile devices and/or batteries of different charging characteristics associated therewith, comprising:

a universal base unit including one or more primary coils therein, each primary coil having a generally planar shape so that when a current is passed through the primary coil a magnetic field is generated in a direction substantially perpendicular to the plane of the primary coil;

wherein the perpendicular magnetic field inductively generates a current in a matching secondary coil or coils within a mobile device placed close to and aligned with the base unit, to charge or power the mobile device;

wherein one or both of the mobile device and a battery have

a receiver and particular charging characteristics associated therewith,

an identification component associated with the mobile device or battery, which is configured to provide wireless identification of the receiver to the base unit,

a means for avoiding overcharging one or both of the mobile device and battery inductively, and

a regulator, coupled to the output of the receiver or to the battery, that regulates an output voltage or output current provided by the receiver, to the mobile device or battery, to be within a range of parameters for the mobile device or the battery;

wherein different mobile devices and batteries can have different charging characteristics associated therewith; and

wherein the receiver communicates with the base unit to

detect, identify and authenticate the receiver with the base unit, as provided by the identification component,

determine and then activate one or more primary coils of the base unit which are aligned with the receiver coil,

verify the continued presence of the receiver near the base unit, and

> communicate information describing the characteristics of the mobile device or the battery, for use by the base unit to provide power transfer to the receiver and to the mobile device and the battery according to their particular charging characteristics.

70. Samsung accused products which can receive wireless power as specified by claim 1 infringe the claim. This includes Samsung smartphones, wearable products, and earbud products. Samsung accused products which can provide wireless power as specified by claim 3 infringe the claim. This includes Samsung smartphones and wireless chargers. Samsung accused products that infringe claim 1 and/or claim 3 of the ’440 patent (and/or any other claims in the patent) are herein collectively the “’440 accused products.” In the following, infringement of ’440 claim 1 by way of the Samsung Galaxy S7 (“S7”) is illustrated to provide a non-limiting example of Samsung’s infringement of ’440 claim 1. Further in the following, infringement of ’440 claim 3 by way of the Samsung Galaxy S10 with the Wireless PowerShare feature (“S10”) and the 5200 Duo is illustrated to provide non-limiting examples of Samsung’s infringement of ’440 claim 3.

71. ’440 claim 1 begins, “A mobile device capable of inductive powering or charging by a universal base unit for charging of different mobile devices and/or batteries of different charging characteristics associated therewith, comprising.” The following illustrates as a non-limiting example how Samsung Galaxy smartphones fit this description, showing in particular the S7.

72. Samsung Galaxy smartphones support wireless charging, as promoted by Samsung. https://www.samsung.com/global/galaxy/what-is/wireless-charging/

Do Galaxy devices have wireless charging?

Get hassle-free charging for when you need to power up fast. Wireless charging saves you from getting all tangled up, giving them the added comfort and speed of simply placing their devices on a charging station. The Wireless Charger Stand (sold separately) gives you the option of using it as a pad or a stand, so you can either give your phone a rest as it charges, or continue watching videos and browsing by propping it up against the stand. And with the Wireless Charger Duo, you're able to charge two devices at once, like your phone and your Galaxy Watch, or your phone and a friend's.

And Fast Wireless Charging 2.0 is a wireless charging standard from Samsung. Delivering a 10W+ charge, it makes your Galaxy S20, S20+, and S20 Ultra wirelessly charge faster, meaning you don't have to be tied down for long. It's available on the Samsung Wireless Charger Stand and Wireless Charger Duo Pad.

Wireless Charging is supported on Galaxy S20, S20+, S20 Ultra, Z Flip, Note10, Note10+, Fold, S10e, S10, S10+, Note9, S9, S9+, Note8, S8, S8+, S7, S7 edge, Note5, S6 edge+, S6 edge, and S6.

Discover more about Galaxy for yourself.

*Wireless charger sold separately.
*Wireless charger requires power connection. Recommend using genuine Samsung branded power cord and/or travel adapter for use.
*Wireless charging under 5W (Normal-mode) is compatible with WPC and PMA.

73. Samsung Galaxy smartphones are compatible with the WPC Standard and thus can be charged by WPC compatible base units capable of charging mobile devices with different charging characteristics (i.e., universal base units that can support, e.g., different power levels, battery capacities, and/or receiver output voltage, etc.).

74. The compliance of Samsung Galaxy smartphones with the WPC Standard is seen for example at the website: https://www.wirelesspowerconsortium.com/products.

75. Here is an example from this website for the S7. https://www.wirelesspowerconsortium.com/products/1549

SAMSUNG MOBILE PHONE GALAXY S7 (SM-G930V)

BRAND
Samsung Mobile Phone

PRODUCT NAME
Galaxy S7

MANUFACTURER PART NUMBER
SM-G930V

PRODUCT TYPE
Power Class 0 Receiver

REGISTRATION DATE
February 24, 2016

ADDITIONAL DETAILS

Qi Registration id	1549
Version	1.1.2
Currently licensed	Yes
Power profile	Basic Power Profile
Maximum received power	5 watts

76. ’440 claim 1 further recites “a battery, wherein one or both of a mobile device and the battery have particular charging characteristics associated therewith.” As a non-limiting example, the S7 meets this part of the claim.

77. The following shows a S7 battery.

https://www.ifixit.com/Teardown/Samsung+Galaxy+S7+Teardown/56686

Step 8

78. And the following shows certain charging characteristics of the S7. https://www.wirelesspowerconsortium.com/products/1549

SAMSUNG MOBILE PHONE GALAXY S7 (SM-G930V)

BRAND
Samsung Mobile Phone

PRODUCT NAME
Galaxy S7

MANUFACTURER PART NUMBER
SM-G930V

PRODUCT TYPE
Power Class 0 Receiver

REGISTRATION DATE
February 24, 2016

ADDITIONAL DETAILS

Qi Registration id	1549
Version	1.1.2
Currently licensed	Yes
Power profile	Basic Power Profile
Maximum received power	5 watts

79. ’440 claim 1 further recites “a receiver and receiver coil, for one of inductively powering the device or charging the battery in the mobile device, wherein the receiver is one of attached to or incorporated into the battery or the mobile device, and wherein the receiver coil has a generally planar shape so that a magnetic field received in a direction substantially perpendicular to the plane of the receiver coil is used to inductively generate a current in the receiver coil.” As a non-limiting example, the S7 also meets this part of the claim.

80. As seen here, the S7 includes a planar receiver coil.

https://www.ifixit.com/Teardown/Samsung+Galaxy+S7+Teardown/56686

Step 7

81. In WPC charging, a current is induced in the receiver coil by a substantially perpendicular magnetic field as specified by this part of the claim. E.g., WPC 1.2.4 Standard, Introduction, page 9 (shown above with respect to the "base unit" part of '208 claim 1).

82. And as seen here, the S7 includes an ASIC and associated external circuitry forming a receiver, comprising for example the IDT/Renesas P9221 ASIC (or equivalent) for wireless power transfer.

https://www.ifixit.com/Teardown/Samsung+Galaxy+S7+Teardown/56686

Step 13

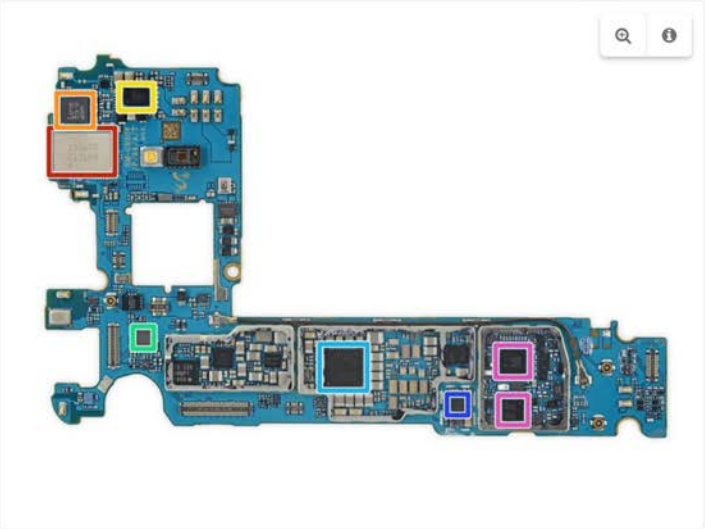

- And on the flip side...
  - Samsung 1316S7 Wi-Fi Module (likely contains a Broadcom BCM4359 WiFi/Bluetooth transceiver)
  - NXP Semiconductor 67T05 (PN67T) NFC controller
  - IDT P9221 wireless power receiver (likely an iteration of IDT P9220)
  - STMicroelectronics LSM6DS3 always-on 6-Axis IMU
  - Qualcomm PM8996 PMIC
  - Qualcomm QFE3100 envelope tracker
  - Qualcomm WTR4905 and WTR3925 RF transceivers

83. ’440 claim 1 further recites “an identification component associated with the mobile device or battery, which is configured to provide wireless identification of the receiver to the universal base unit.” As a non-limiting example, the S7 also meets this part of the claim.

84. The WPC Standard requires this. For example, The Qi Wireless Power Transfer System Description, Version 1.1.2, Part 1: Interface Definition (June 2013), pages 135-136 and p. 147 (“WPC 1.1.2 Standard, Part 1, Interface Definition”), for which the S7 is certified, requires that the S7 transmit an identification packet including a Manufacturer Code and a Device Identifier identifying the device uniquely to the wireless charger base unit. Ex. H.

5.3 Power Receiver perspective

Section 5.3.1 defines the initial response of the Power Receiver to the application of a Power Signal. As part of this initial response, the Power Receiver wakes up its Communications and Control Unit—if that is not already up and running. Section 5.3.2 defines the response of a Power Receiver to a Digital Ping. This response ensures the Power Transmitter that it is dealing with a Power Receiver (rather than some unknown object). Section 5.3.3 defines the response of a Power Receiver to an extended Digital Ping. This response enables the Power Transmitter to identify the Power Receiver and establish a Power Transfer Contract. Finally, Section 5.3.4 defines the protocol that the Power Receiver shall execute in order to control the power transfer from the Power Transmitter.

5.3.3 Identification & configuration phase

In the *identification & configuration* phase, the Power Receiver shall transmit the following sequence of Packets:

- If the Power Receiver enters the *identification & configuration* phase from the *ping* phase, an Identification Packet.

6.3.8 Identification Packet (0x71)

Table 6-12 defines the format of the message contained in an Identification Packet.

Table 6-12: Identification

	b_7	b_6	b_5	b_4	b_3	b_2	b_1	b_0
B_0	Major Version				Minor Version			
B_1	(msb)	Manufacturer Code						
B_2								(lsb)
B_3	Ext	(msb)	Basic Device Identifier					
⋮								
B_6								(lsb)

Major Version The combination of this field and the Minor Version field identifies to which revision of the System Description Wireless Power Transfer the Power Receiver complies. The Major Version field shall contain the binary coded digit value 0x1.

Minor Version The combination of this field and the Major Version field identifies to which minor revision of the System Description Wireless Power Transfer the Power Receiver complies. The Minor Version field shall contain the binary coded digit value 0x1.

Manufacturer Code The bit string contained in this field identifies the manufacturer of the Power Receiver, as specified in [PRMC].

Ext If this bit is set to ZERO, the bit string

Manufacturer Code || Basic Device Identifier

identifies the Power Receiver. If this bit is set to ONE, the bit string

Manufacturer Code || Basic Device Identifier || Extended Device Identifier

identifies the Power Receiver (see also Section 6.3.9).

Basic Device Identifier The bit string contained in this field contributes to the identification of the Power Receiver. A Power Receiver manufacturer should ensure that the combination of Basic Device Identifier and Manufacturer ID is sufficiently unique. Embedding a serial number of at least 20 bits in the Basic Device Identifier is sufficient. Alternatively, using a (pseudo) random number generator to dynamically generate part of the Basic Device Identifier is sufficient as well, provided that the generated part complies with the following requirements:

- The generated part shall comprise at least 20 bits.
- All possible values shall occur with equal probability.
- The Power Receiver shall not change the generated part while the Power Signal is applied.
- The Power Receiver shall retain the generated part for at least 2 s if the Power Signal is interrupted or removed.

(Informative) *These requirements ensure that the scanning procedure of a type B1 Power Transmitter proceeds correctly; see also Annex C.2.*

85. The hardware/firmware/software in the S7 that does this corresponds to the claimed "identification component." For example, the S7 includes the IDT/Renesas P9221 receiver ASIC (or equivalent ASIC), which comprises in part an identification component consisting of the microcontroller and the communication circuitry and software / firmware that communicates with the base unit according to WPC Standard as specified by this part of the claim.

86. The publicly available datasheet for the P9221-R receiver ASIC, which upon information and belief is representative of the wireless power ASIC used in the S7, confirms adherence to the WPC Standard. Ex. I.

RENESAS **Wireless Power Receiver for 15W Applications** **P9221-R Datasheet**

Description

The P9221-R is a high-efficiency, Qi-compliant wireless power receiver targeted for applications up to 15W. Using magnetic inductive charging technology, the receiver converts an AC power signal from a resonant tank to a programmable regulated 9V or 12V DC output voltage. The integrated, low RDS_{ON} synchronous rectifier and ultra-low dropout linear (LDO) regulator offer high efficiency, making the product ideally suited for battery-operated applications.

Features

- Single-chip solution supporting up to 15W applications
- WPC-1.2.3 compliant
- Patented over-voltage protection clamp eliminating external capacitors
- 87% peak DC-to-DC efficiency with P9242-R Tx
- Full synchronous rectifier with low RDS_{ON} switches

87. The representative P9221-R ASIC includes, among other things, (a) an ARM microcontroller with memory containing embedded software/firmware (green box) and (b) communication circuitry (red box). External capacitors (blue box) are used with the communication circuitry.

RENESAS

7. Functional Block Diagram

Figure 17. Functional Block Diagram

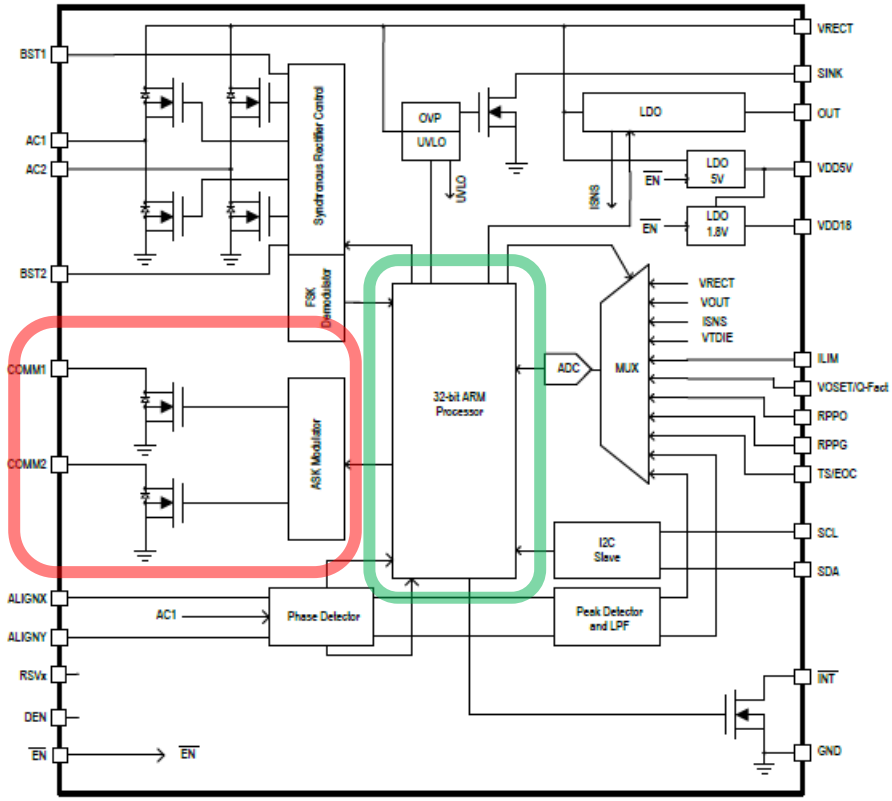

Typical Application Circuit

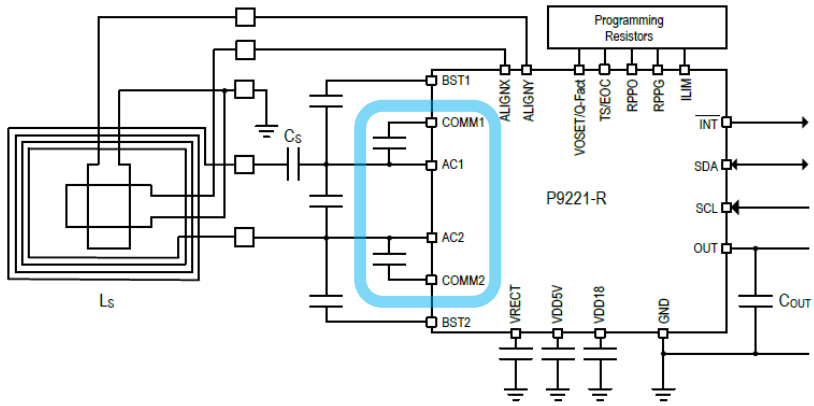

88. In the P9221-R ASIC, communication is achieved by switching the FETs to connect and disconnect the capacitors shown in the blue box above to ground by the microcontroller as described below.

RENESAS

9. Communication Interface

9.1 Modulation/Communication

The wireless medium power charging system uses two-way communication: receiver-to-transmitter and transmitter-to receiver.

Receiver-to-transmitter communication is accomplished by modulating the load seen by the receiver's inductor; the communication is purely digital and symbols 1's and 0's ride on top of the power signal that exists between the two coils. Modulation is done with amplitude-shift keying (ASK) modulation using internal switches to connect external capacitors from AC1 and AC2 to ground (see Figure 17) with a bit rate of 2Kbps. To the transmitter, this appears as an impedance change, which results in measurable variations of the transmitter's output waveform. The power transmitter detects this as a modulation of coil current/voltage to receive the packets. See sections 9.2 and 9.3 for details for ASK modulation.

Transmitter-to-receiver communication is accomplished by frequency-shift keying (FSK) modulation over the power signal frequency. The power receiver P9221-R has the means to demodulate FSK data from the power signal frequency and use it in order to establish the handshaking protocol with the power transmitter.

89. The P9221-R ASIC has the following specific register locations for the unique device ID communicated by the P9221-R ASIC during wireless charging.

RENESAS

11. Functional Registers

The following tables provide the address locations, field names, available operations (R or RW), default values, and functional descriptions of all the internally accessible registers contained within the P9221-R. The default I²C slave address is 61_{HEX}. The address of each register has a two-byte structure. For example, the low byte of major firmware revision must be read with two bytes address with 00_{HEX} and 04_{HEX}.

Table 9. Device Identification Register

Address and Bit	Register or Bit Field Name	R/W	Default	Function and Description
0000_{HEX} [7:0]	Part_number_L	R	20_{HEX}	P9221-R chip identification low byte
0001_{HEX} [7:0]	Part_number_H	R	92_{HEX}	P9221-R chip identification high byte

90. Per the WPC Standard, the wireless charger base unit (the Power Transmitter in WPC) uses this identification information from the receiver. E.g., WPC 1.1.2 Standard, Part 1, Interface Definition, page 124 (see also WPC 1.2.4 Standard, Parts 1 and 2, Interface Definitions, page 46).

- *identification & configuration* In this phase, the Power Transmitter identifies the selected Power Receiver, and obtains configuration information such as the maximum amount of power that the Power Receiver intends to provide at its output. The Power Transmitter uses this information to create a Power Transfer Contract. This Power Transfer Contract contains limits for several parameters that characterize the power transfer in the *power transfer* phase. At any time before proceeding to the *power transfer* phase, the Power Transmitter may decide to terminate the extended Digital Ping—e.g. to discover additional Power Receivers. This reverts the system to the *selection* phase.

91. ’440 claim 1 further recites “a means for avoiding overcharging one or both of the mobile device and battery inductively.” As a non-limiting example, the S7 also meets this part of the claim.

92. Per the WPC Standard, the S7 includes means to send an “end power transfer” message to the wireless charger base unit, to signal to the base unit to stop inductive charging, to avoid overcharging. E.g., WPC 1.1.2 Standard, Part 1, Interface Definition, page 124.

System Description
Wireless Power Transfer
Communications Interface Version 1.1.2

6.3.2 End Power Transfer Packet (0x02)

Table 6-3 defines the format of the message contained in an End Power Transfer Packet.

Table 6-5: End Power Transfer

	b_7	b_6	b_5	b_4	b_3	b_2	b_1	b_0
B_0	End Power Transfer Code							

End Power Transfer Code This field identifies the reason for the End Power Transfer request, as listed in Table 6-6. The Power Receiver shall not transmit End Power Transfer Packets that contain any of the values that Table 6-6 lists as reserved.

Table 6-6: End Power Transfer values

Reason	Value
Unknown	0x00
Charge Complete	0x01

93. The hardware/firmware/software in the S7 that does this corresponds to the claimed “means for avoiding overcharging.” For example, the S7 includes the IDT/Renesas P9221-R ASIC (or equivalent ASIC), which comprises “means for avoiding overcharging” as specified by this part of the claim. “End Power Transfer” can be triggered for a variety of reasons to avoid overcharging the battery in the mobile device.

94. The ASIC and its external circuitry and software / firmware to implement this functionality is illustrated below.

10.6 Power Transfer Phase

In this phase, the P9221-R controls the power transfer by means of the following control data packets:

- Control Error Packets
- Received Power Packet (RPP, FOD-related)
- End Power Transfer (EPT) Packet

Once the "identification and configuration" phase is completed, the transmitter initiates the power transfer mode. The P9221-R control circuit measures the rectifier voltage and sends error packets to the transmitter to adjust the rectifier voltage to the level required to maximize the efficiency of the linear regulator and to send to the transmitter the actual received power packet for foreign object detection (FOD) to guarantee safe, efficient power transfer.

In the event of an EPT issued by the application, the P9221-R turns off the LDO and continuously sends EPT packets until the transmitter removes the power and the rectified voltage on the receiver side drops below the UVLO threshold.

8.9 External Temperature Sensing and End of Charge – TS/EOC

The P9221-R has a temperature sensor input which can be used to monitor an external temperature by using a thermistor. The built-in comparator's reference voltage is 0.6V and 0.1V in the P9221-R, and it is used for monitoring the voltage level on the TS/EOC pin as described by Equation 1.

$$V_{TS}=V_{VDD18}\times\frac{NTC}{R+NTC}$$ **Equation 1**

Where NTC is the thermistor's resistance and R is the pull-up resistor connected to VDD18 pin. The over–temperature shutdown is trigged when the TS pin voltage is between 0.6V and 0.1V; for more information, see Figure 24.

When the TS/EOC pin is less than 0.1V, the End of Charge (EOC) function is activated, and the P9221-R will send the End Power Transfer (EPT) packet to the transmitter terminating the power delivery.

95. '440 claim 1 further recites "a regulator, coupled to the output of the receiver or to the battery that regulates an output voltage or output current provided by the receiver, to the mobile device or battery, to be within a range of parameters for the mobile device or the battery." As a non-limiting example, the S7 also meets this part of the claim, for example, by way of the output Low Drop Out Regulator (LDO) (red box below) included in the wireless power ASIC and/or one or more of the power management integrated circuits (PMICs) in the S7 as seen below.

96. The following shows an LDO as in the P9221-R ASIC. The LDO regulates the output voltage (at the "OUT" pin) of the P9221-R ASIC.

RENESAS

7. Functional Block Diagram

Figure 17. Functional Block Diagram

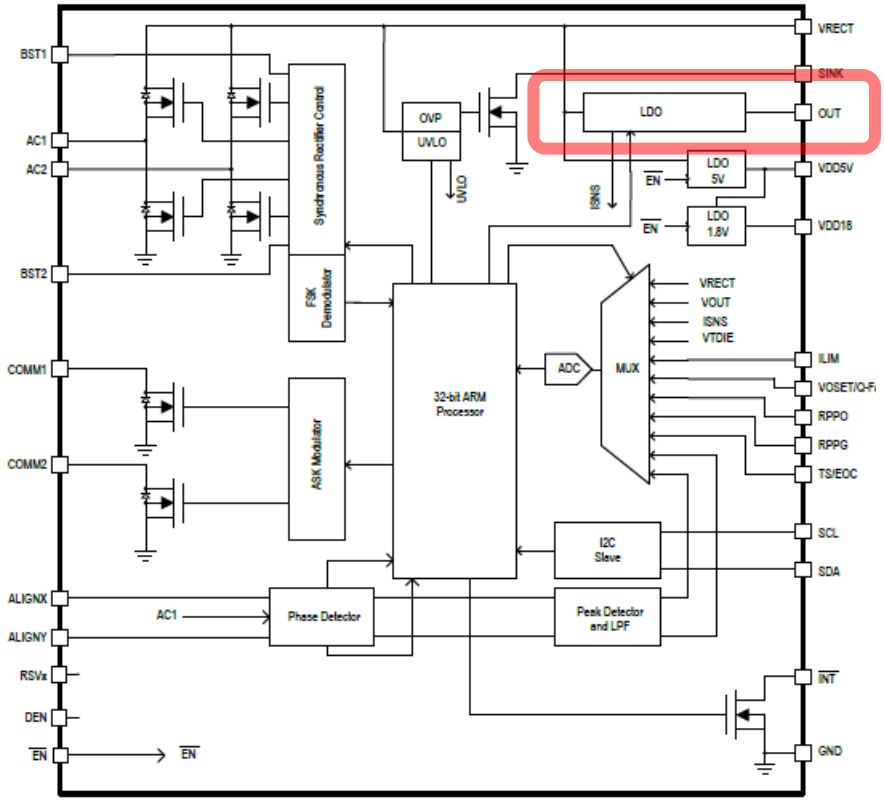

8.1 LDO – Low Dropout Regulators

The P9221-R has three low-dropout linear regulators. The main regulator is used to provide the power required by the battery charger where the output voltage can be set to either 9V or 12V. For more information about setting the output voltage, see section 8.2. It is important to connect a minimum of 30µF ceramic capacitance to the OUT pin.

The other two regulators, VDD5V and VDD18, are to bias the internal circuitry of the receiver. The LDOs must have local 1µF ceramic capacitors placed as close as possible to the pins.

97. The following shows PMICs in the S7. At least one of these PMICs further regulates the voltage provided to the S7 battery for wirelessly charging the S7 battery.

https://www.ifixit.com/Teardown/Samsung+Galaxy+S7+Teardown/56686

Step 14

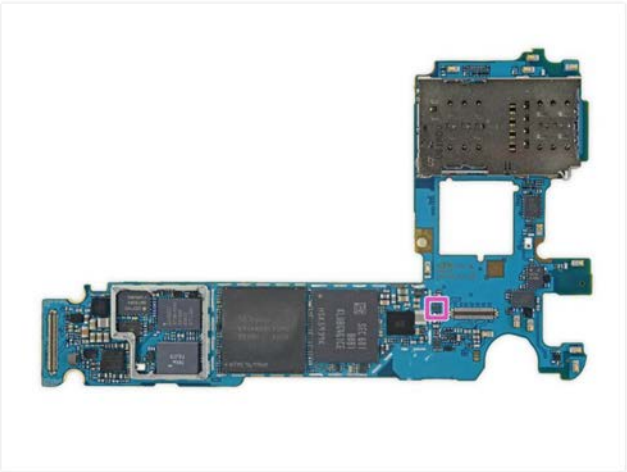

- IC identification, pt. 2:
  - Samsung camera processor (possibly)
  - Zinitix ZF115N haptic driver
  - Samsung S2MPB02 power management
  - Qualcomm PM8004 power management
  - Maxim Integrated MAX77838EWO power management
  - NXP Semiconductor NCX2200 comparator
  - Toshiba TC7SBD385FU bus switch

98. ’440 claim 1 further recites “wherein different mobile devices and batteries can have different charging characteristics associated therewith.” As a non-limiting example, the S7 also meets this part of the claim, as its specific charging characteristics include differences from other mobile devices and batteries that support wireless charging (e.g., different from the Samsung Galaxy S20 Ultra smartphone, herein the “S20 Ultra”), such as the maximum received power, as illustrated below.

99. The following shows charging characteristics for the S7.

https://www.wirelesspowerconsortium.com/products/1549

SAMSUNG MOBILE PHONE GALAXY S7 (SM-G930V)

BRAND
Samsung Mobile Phone

PRODUCT NAME
Galaxy S7

MANUFACTURER PART NUMBER
SM-G930V

PRODUCT TYPE
Power Class 0 Receiver

REGISTRATION DATE
February 24, 2016

ADDITIONAL DETAILS

Qi Registration id	1549
Version	1.1.2
Currently licensed	Yes
Power profile	Basic Power Profile
Maximum received power	5 watts

100. The following shows charging characteristics for the S20 Ultra, at least some of which are different from that of the S7.

https://www.wirelesspowerconsortium.com/products/8785

SAMSUNG ELECTRONICS GALAXY S20 ULTRA 5G (SM-G9880)

BRAND
Samsung Electronics

PRODUCT NAME
Galaxy S20 Ultra 5G

MANUFACTURER PART NUMBER
SM-G9880

PRODUCT TYPE
Power Class 0 Receiver

REGISTRATION DATE
February 17, 2020

ADDITIONAL DETAILS

Qi Registration id	8785
Version	1.2.4
Currently licensed	Yes
Power profile	Basic Power Profile
Maximum received power	4.4 watts

101. ’440 claim 1 further recites “wherein the receiver communicates with the base unit to detect, identify and authenticate the receiver with the base unit, as provided by the identification

component, determine and then activate one or more primary coils of the base unit which are aligned with the receiver coil, verify the continued presence of the receiver near the base unit, and communicate information describing the characteristics of the mobile device or the battery, for use by the base unit to provide power transfer to the receiver and to the mobile device and the battery according to their particular charging characteristics." As a non-limiting example, the S7 also meets this part of the claim.

102. The WPC Standard requires this. For example, the WPC 1.1.2 Standard, Part 1, Interface Definition, describes at page 139 that mobile devices like the S7 must communicate with the wireless charger base unit to configure and control wireless charging.

System Description
Wireless Power Transfer
Version 1.1.2 Communications Interface

6 Communications Interface

6.1 Introduction

The Power Receiver communicates to the Power Transmitter using backscatter modulation. For this purpose, the Power Receiver modulates the amount of power, which it draws from the Power Signal. The Power Transmitter detects this as a modulation of the current through and/or voltage across the Primary Cell. In other words, the Power Receiver and Power Transmitter use an amplitude modulated Power Signal to provide a Power Receiver to Power Transmitter communications channel.

103. Per the WPC 1.1.2 Standard, Part 1, Interface Definition, pages 136 and 124, the S7 must communicate with the base unit information to allow the base unit to detect, identify and authenticate the receiver in the S7. For example, the S7 communicates the following Identification Packet.

5.3.3 Identification & configuration phase

In the *identification & configuration* phase, the Power Receiver shall transmit the following sequence of Packets:

- If the Power Receiver enters the *identification & configuration* phase from the *ping* phase, an Identification Packet.
- If the Ext bit of the preceding Identification Packet is set to ONE, an Extended Identification Packet.

6.3.8 Identification Packet (0x71)

Table 6-12 defines the format of the message contained in an Identification Packet.

Table 6-12: Identification

	b_7	b_6	b_5	b_4	b_3	b_2	b_1	b_0
B_0	Major Version				Minor Version			
B_1	(msb) Manufacturer Code							
B_2								(lsb)
B_3	Ext	(msb) Basic Device Identifier						
⋮								
B_6								(lsb)

Major Version The combination of this field and the Minor Version field identifies to which revision of the System Description Wireless Power Transfer the Power Receiver complies. The Major Version field shall contain the binary coded digit value 0x1.

Minor Version The combination of this field and the Major Version field identifies to which minor revision of the System Description Wireless Power Transfer the Power Receiver complies. The Minor Version field shall contain the binary coded digit value 0x1.

Manufacturer Code The bit string contained in this field identifies the manufacturer of the Power Receiver, as specified in [PRMC].

Ext If this bit is set to ZERO, the bit string

Manufacturer Code || Basic Device Identifier

identifies the Power Receiver. If this bit is set to ONE, the bit string

Manufacturer Code || Basic Device Identifier || Extended Device Identifier

identifies the Power Receiver (see also Section 6.3.9).

Basic Device Identifier The bit string contained in this field contributes to the identification of the Power Receiver. A Power Receiver manufacturer should ensure that the combination of Basic Device Identifier and Manufacturer ID is sufficiently unique. Embedding a serial number of at least 20 bits in the Basic Device Identifier is sufficient. Alternatively, using a (pseudo) random number generator to dynamically generate part of the Basic Device Identifier is sufficient as well, provided that the generated part complies with the following requirements:

- The generated part shall comprise at least 20 bits.
- All possible values shall occur with equal probability.
- The Power Receiver shall not change the generated part while the Power Signal is applied.
- The Power Receiver shall retain the generated part for at least 2 s if the Power Signal is interrupted or removed.

(Informative) *These requirements ensure that the scanning procedure of a type B1 Power Transmitter proceeds correctly; see also Annex C.2.*

power transfer to a Power Receiver, the Power Transmitter proceeds to the *ping* phase—and eventually to the *power transfer* phase. On the other hand, if the Power Transmitter does not select a Power Receiver for power transfer—and is not actively providing power to a Power Receiver for an extended amount of time—the Power Transmitter should enter a stand-by mode of operation.[6] See [Part 2] for performance requirements on such a mode of operation.

- *ping* In this phase, the Power Transmitter executes a Digital Ping, and listens for a response. If the Power Transmitter discovers a Power Receiver, the Power Transmitter may extend the Digital Ping, i.e. maintain the Power Signal at the level of the Digital Ping. This causes the system to proceed to the *identification & configuration* phase. If the Power Transmitter does not extend the Digital Ping, the system shall revert to the *selection* phase.
- *identification & configuration* In this phase, the Power Transmitter identifies the selected Power Receiver, and obtains configuration information such as the maximum amount of power that the Power Receiver intends to provide at its output. The Power Transmitter uses this information to create a Power Transfer Contract. This Power Transfer Contract contains limits for several parameters that characterize the power transfer in the *power transfer* phase. At any time before proceeding to the *power transfer* phase, the Power Transmitter may decide to terminate the extended Digital Ping—e.g. to discover additional Power Receivers. This reverts the system to the *selection* phase.

104. Per the WPC Standard, the S7 must communicate with the base unit information to enable the base unit to determine and activate one or more charging coils aligned with the receiver coil of the S7, so that a base unit with a single charging coil can determine if its charging coil is sufficiently aligned with the receiver coil for charging, and so that a base unit with multiple charging coils can determine which of its charging coil(s) is sufficiently/best aligned with the receiver coil for charging. For example, per the WPC 1.1.2 Standard, Part 1, Interface Definition, page 136, the S7 must communicate a Signal Strength Packet from which the base unit can assess coil alignment.

5.3.2 Ping phase

If the Power Receiver responds to te Digital Ping, the Power Receiver shall transmit either a Signal Strength Packet, or an End Power Transfer Packet as its first Packet. The Power Receiver shall transmit this first Packet immediately upon entering the *ping* phase.

Figure 5-8: Power Receiver timing in the *ping* phase

After the Power Receiver has transmitted a Signal Strength Packet, the Power Receiver shall proceed to the *identification & configuration* phase. After the Power Receiver has transmitted an End Power Transfer Packet, shall remain in the *ping* phase. In that case, the Power Receiver should transmit additional End Power Transfer Packets.[8]

6.3.1 Signal Strength Packet (0x01)

Table 6-4 defines the format of the message contained in a Signal Strength Packet

Table 6-4: Signal Strength

	b_7	b_6	b_5	b_4	b_3	b_2	b_1	b_0
B_0	Signal Strength Value							

Signal Strength Value The unsigned integer value in this field indicates the degree of coupling between the Primary Cell and Secondary Coil, with the purpose to enable Power Transmitters that use Free Positioning to determine the Primary Cell that provides optimum power transfer (see also Annex C). To determine the degree of coupling, the Power Receiver shall monitor the value of a suitable variable during a Digital Ping. Examples of such variables are:

- The rectified voltage.
- The open circuit voltage (as measured at the output disconnect switch).
- The received Power (if the rectified voltage is actively or passively clamped during a Digital Ping).

The variable that is chosen shall result in a Signal Strength Value that increases monotonically with increasing degree of coupling. The Signal Strength Value is reported as

$$\text{Signal Strength Value} = \frac{U}{U_{max}} \cdot 256,$$

105. Per the WPC Standard, the S7 must communicate with the base unit information to enable the base unit to "verify the continued presence of the receiver near the base unit." For example, per the WPC Standard, the S7 must communicate regularly with the base unit during all phases including the Power Transfer phase to control the power transfer, which continuing communication also allows the base unit to know that the S7 continues to be near the base unit for wireless charging. E.g., WPC 1.1.2 Standard, Part 1, Interface Definition, page 124.

At any time a user can remove a Mobile Device that is receiving power. The Power Transmitter can recognize such an event from a time-out in the communications from the Power Receiver, or from a violation of the Power Transfer Contract. As a result, the Power Transmitter aborts the power transfer and the system reverts to the *selection* phase.

106. Per the WPC Standard, the S7 must communicate its charging characteristics to the base unit so that the base unit knows how to provide the wireless power transfer to the S7. E.g., WPC 1.1.2 Standard, Part 1, Interface Definition, pages 124 and 146.

- *identification & configuration* In this phase, the Power Transmitter identifies the selected Power Receiver, and obtains configuration information such as the maximum amount of power that the Power Receiver intends to provide at its output. The Power Transmitter uses this information to create a Power Transfer Contract. This Power Transfer Contract contains limits for several parameters that characterize the power transfer in the *power transfer* phase. At any time before proceeding to the *power transfer* phase, the Power Transmitter may decide to terminate the extended Digital Ping—e.g. to discover additional Power Receivers. This reverts the system to the *selection* phase.

6.3.7 Configuration Packet (0x51)

Table 6-11 defines the format of the message contained in a Configuration Packet.

Table 6-11: Configuration

	b_7	b_6	b_5	b_4	b_3	b_2	b_1	b_0
B_0	Power Class		Maximum Power					
B_1	Reserved							
B_2	Prop	Reserved			ZERO	Count		
B_3	Window Size					Window Offset		
B_4	Reserved							

Power Class This field contains an unsigned integer value that indicates the Power Receiver's Power Class. Power Receivers that comply with this version 1.1.2 of the System Description Wireless Power Transfer, Volume I, Part 1, shall set this field to 0.

Maximum Power Apart from a scaling factor, the unsigned integer value contained in this field indicates the maximum amount of power, which the Power Receiver expects to provide at the output of the rectifier. This maximum amount of power is calculated as follows:

$$P_{max} = \left(\frac{\text{Maximum Power}}{2}\right) \times 10^{\text{Power Class}} \text{ W.}$$

107. Moreover, in the S7, per the WPC Standard, the representative IDT/Renesas P9221-R ASIC communicates its wireless receiver output voltage or current to the base unit for closed-loop feedback control of the voltage or current. E.g., WPC 1.1.2 Standard, Part 1, Interface Definition, page 124.

Throughout the *power transfer* phase, the Power Transmitter and Power Receiver control the amount of power that is transferred. The Figure 5-2 illustrates a schematic diagram of the power transfer control loop, which basically operates as follows: The Power Receiver selects a desired Control Point—a desired output current and/or voltage, a temperature measured somewhere in the Mobile Device, etc. In addition, the Power Receiver determines its actual Control Point. Note that the Power Receiver may use any approach to determine a Control Point. Moreover, the Power Receiver may change this approach at any time during the *power transfer* phase. Using the desired Control Point and actual Control Point, the Power Receiver calculates a Control Error Value—for example simply taking the (relative) difference of the two output voltages or currents—such that the result is negative if the Power Receiver requires less power in order to reach its desired Control Point, and positive if the Power Receiver requires more power in order to reach its desired Control Point. Subsequently, the Power Receiver transmits this Control Error Value to the Power Transmitter.

[6]Note that it is up to the Power Transmitter implementation to determine whether this stand-by mode of operation is part of the *selection* phase or is separate from the *selection* phase.

124 © Wireless Power Consortium, June 2013

108. These operations are performed in part by the representative IDT/Renesas P9221-R ASIC which has a microcontroller programmed to perform the communication per the WPC Standard as specified by this part of the claim.

10.6 Power Transfer Phase

In this phase, the P9221-R controls the power transfer by means of the following control data packets:

- Control Error Packets
- Received Power Packet (RPP, FOD-related)
- End Power Transfer (EPT) Packet

Once the "identification and configuration" phase is completed, the transmitter initiates the power transfer mode. The P9221-R control circuit measures the rectifier voltage and sends error packets to the transmitter to adjust the rectifier voltage to the level required to maximize the efficiency of the linear regulator and to send to the transmitter the actual received power packet for foreign object detection (FOD) to guarantee safe, efficient power transfer.

In the event of an EPT issued by the application, the P9221-R turns off the LDO and continuously sends EPT packets until the transmitter removes the power and the rectified voltage on the receiver side drops below the UVLO threshold.

109. '440 claim 3 begins, "A system for use with a mobile device for charging or powering the mobile device inductively by a universal base unit for charging of different mobile devices and/or batteries of different charging characteristics associated therewith, comprising." The following illustrates as on-limiting examples how Samsung Galaxy smartphones with Wireless PowerShare and the Samsung wireless chargers fit this description, showing in particular how the S10 and the 5200 Duo fit this description.

110. Samsung's Galaxy phones with Wireless PowerShare (e.g., the S10) and standalone chargers (e.g., the 5200 Duo) are systems with a universal base unit for powering/charging mobile devices as specified by this claim. They are compatible for powering/charging mobile devices per the WPC Standard, and thus can power/charge WPC compatible mobile devices with different charging characteristics.

111. For example, at least the S10 and later Galaxy models include "Wireless PowerShare" to inductively transfer power from the S10 to another device. https://www.samsung.com/latin_en/support/mobile-devices/how-to-use-wireless-powershare/

Device-to-device charging

If the battery on your device is getting low, automatically transfer power from your S10.

Simply activate "Wireless PowerShare" on your notification panel, then place the other device on the center of your S10 with their backs facing.

Please note: The location of the charging coil may vary by device model. You may need to adjust the devices until they connect with each other properly.

Separate the devices when enough power has been transferred or wait until the other device is fully charged.

112. The S10 can wirelessly charge various mobile devices with different charging characteristics with the Wireless PowerShare feature.

https://www.samsung.com/us/support/answer/ANS00082564/

Compatible Samsung devices

Most Qi-Compatible Samsung devices can be charged with Wireless PowerShare, but check out the full list of compatible devices just in case. The speed and power of the charge will vary by device.

Phones that can use and also be charged with Wireless PowerShare:

- Galaxy S22, S22+, and S22 Ultra
- Galaxy S21, S21+, and S21 Ultra
- Note20 5G and Note20 Ultra 5G
- Galaxy Note10, Note10+, and Note10+ 5G
- Galaxy Fold, Z Fold2, Z Fold3 and Z Fold4
- Galaxy Z Flip, Z Flip 5G, Z Flip3 and Z Flip4
- Galaxy S20 5G, S20+ 5G, S20 Ultra 5G, and S20 FE
- Galaxy S10e, S10, S10+, and S10 5G

Other devices that can be charged by Wireless PowerShare:

- Galaxy Buds, Galaxy Buds2, Galaxy Buds+, Galaxy Buds Live, Galaxy Buds Pro, and Galaxy Buds2 Pro
- Galaxy Watch, Galaxy Watch3, Galaxy Watch4 series, Galaxy Watch5 series, Gear Sport, and Gear S3
- Galaxy S7/S7 Edge, S8/S8+, S9/S9+, Note8, and Note9
- Galaxy Watch Active and Galaxy Watch Active2

113. The 5200 Duo can wirelessly charge various mobile devices with different charging characteristics per the WPC Standard.

https://www.samsung.com/us/mobile/mobile-accessories/phones/wireless-charger-Duo-pad-black-ep-p5200tbegus/

Qi certified

The Wireless Charger Duo Pad is Qi certified meaning any Qi compatible products can charge on it, including the Samsung Galaxy S10, Galaxy Note9, Apple iPhone 8, iPhone X, and Google Pixel 3 .

114. ’440 claim 3 further recites “a universal base unit including one or more primary coils therein, each primary coil having a generally planar shape so that when a current is passed through the primary coil a magnetic field is generated in a direction substantially perpendicular to the plane of the primary coil; wherein the perpendicular magnetic field inductively generates a current in a matching secondary coil or coils within a mobile device placed close to and aligned

with the base unit, to charge or power the mobile device." As non-limiting examples, the S10 and the 5200 Duo meet this part of the claim.

115. For example, the S10 is a universal base unit as claimed. The S10 includes a wireless power transceiver ASIC such as the IDT P9320S for controlling Wireless PowerShare per the WPC Standard.

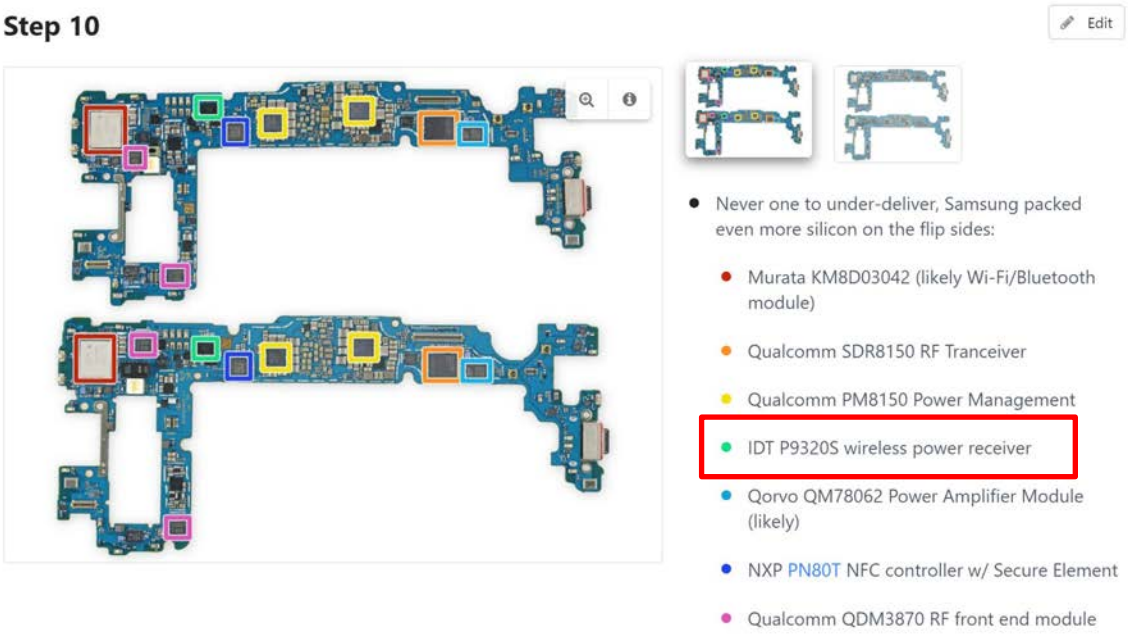

116. Moreover, the S10 includes a coil to charge a mobile device placed on its back charging surface.

https://www.ifixit.com/Teardown/Samsung+Galaxy+S10+and+S10e+Teardown/120331

Step 2

https://www.samsung.com/latin_en/support/mobile-devices/how-to-use-wireless-powershare/

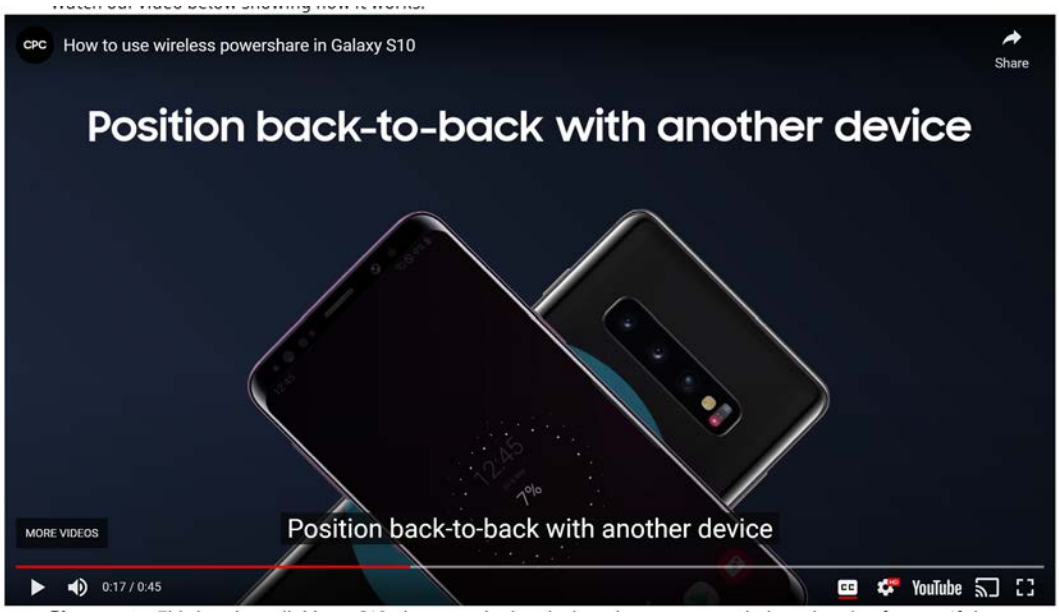

117. The 5200 Duo comprises a universal base unit which has two charging locations with three coils in total.

https://www.samsung.com/us/mobile/mobile-accessories/phones/wireless-charger-Duo-pad-black-ep-p5200tbegus/

118. The 5200 Duo includes multiple primary coils, as seen above with respect to the "base unit" part of '208 claim 1.

119. The 5200 Duo includes multiple wireless power transmitter ASICs (e.g., IDT/Renesas P9236 ASICs) for controlling wireless charging per the WPC Standard and Samsung Wireless Fast Charge which is based on a variant of the WPC Extended Power Profile (EPP), as seen above with respect to the "base unit" and "communication interface" parts of '208 claim 1.

120. Current flowing in the planar charging coils in the S10 and the 5200 Duo that are parallel to their charging surfaces results in a perpendicular magnetic field that induces a current in the receiver coil of the mobile device as specified in this part of the claim. E.g., WPC 1.2.4 Standard, Introduction, page 9 (shown above with respect to the "base unit" part of '208 claim 1).

121. '440 claim 3 further recites "wherein one or both of the mobile device and a battery have a receiver and particular charging characteristics associated therewith, an identification component associated with the mobile device or battery, which is configured to provide wireless identification of the receiver to the base unit, a means for avoiding overcharging one or both of the mobile device and battery inductively, and a regulator, coupled to the output of the receiver or to the battery, that regulates an output voltage or output current provided by the receiver, to the mobile device or battery, to be within a range of parameters for the mobile device or the battery; wherein different mobile devices and batteries can have different charging characteristics associated therewith." As a non-limiting example, the S10 and the 5200 Duo meet this part of the claim as they can wirelessly charge mobile devices that have the characteristics/components specified by this part of the claim. For example, they can wirelessly charge S7 smartphones, and S7 smartphones have the characteristics/components specified by this part of the claim, as detailed above with respect to '440 claim 1. They can also similarly charge S20 Ultra smartphones and other Samsung smartphones which similarly have the characteristics/components specified by this part of the claim. Moreover, the various mobile devices they can wirelessly charge have different

charging characteristics, e.g., the S7 and S20 Ultra smartphones have different charging characteristics as illustrated below.

https://www.wirelesspowerconsortium.com/products/1549

SAMSUNG MOBILE PHONE GALAXY S7 (SM-G930V)

BRAND
Samsung Mobile Phone

PRODUCT NAME
Galaxy S7

MANUFACTURER PART NUMBER
SM-G930V

PRODUCT TYPE
Power Class 0 Receiver

REGISTRATION DATE
February 24, 2016

ADDITIONAL DETAILS

Qi Registration id	1549
Version	1.1.2
Currently licensed	Yes
Power profile	Basic Power Profile
Maximum received power	5 watts

https://www.wirelesspowerconsortium.com/products/8785

SAMSUNG ELECTRONICS GALAXY S20 ULTRA 5G (SM-G9880)

BRAND
Samsung Electronics

PRODUCT NAME
Galaxy S20 Ultra 5G

MANUFACTURER PART NUMBER
SM-G9880

PRODUCT TYPE
Power Class 0 Receiver

REGISTRATION DATE
February 17, 2020

ADDITIONAL DETAILS

Qi Registration id	8785
Version	1.2.4
Currently licensed	Yes
Power profile	Basic Power Profile
Maximum received power	4.4 watts

122. ’440 claim 3 further recites “wherein the receiver communicates with the base unit to detect, identify and authenticate the receiver with the base unit, as provided by the identification

component, determine and then activate one or more primary coils of the base unit which are aligned with the receiver coil, verify the continued presence of the receiver near the base unit, and communicate information describing the characteristics of the mobile device or the battery, for use by the base unit to provide power transfer to the receiver and to the mobile device and the battery according to their particular charging characteristics." As a non-limiting example, the S10 and the 5200 Duo meet this part of the claim as the mobile devices they can wirelessly charge communicate with the S10 as a charger in the Wireless PowerShare mode and the 5200 Duo, so that the S10 and 5200 Duo can configure and control the wireless powering/charging as specified by this part of the claim. For example, they can wirelessly charge S7 smartphones. S7 smartphones have the characteristics specified by this part of the claim as detailed above with respect to '440 claim 1, and they configure and control the wireless powering/charging of a S7 as specified by this part of the claim. The S10 and 5200 Duo do so per the WPC Standard. E.g., WPC 1.2.4 Standard, Parts 1 and 2, Interface Definitions, pages 45-50 (Figure 16 of which below provides an overview thereof) in the Baseline Power Profile (BPP) (≤5 W of received power by the device).

Figure 16. Power transfer phases—Baseline Power Profile

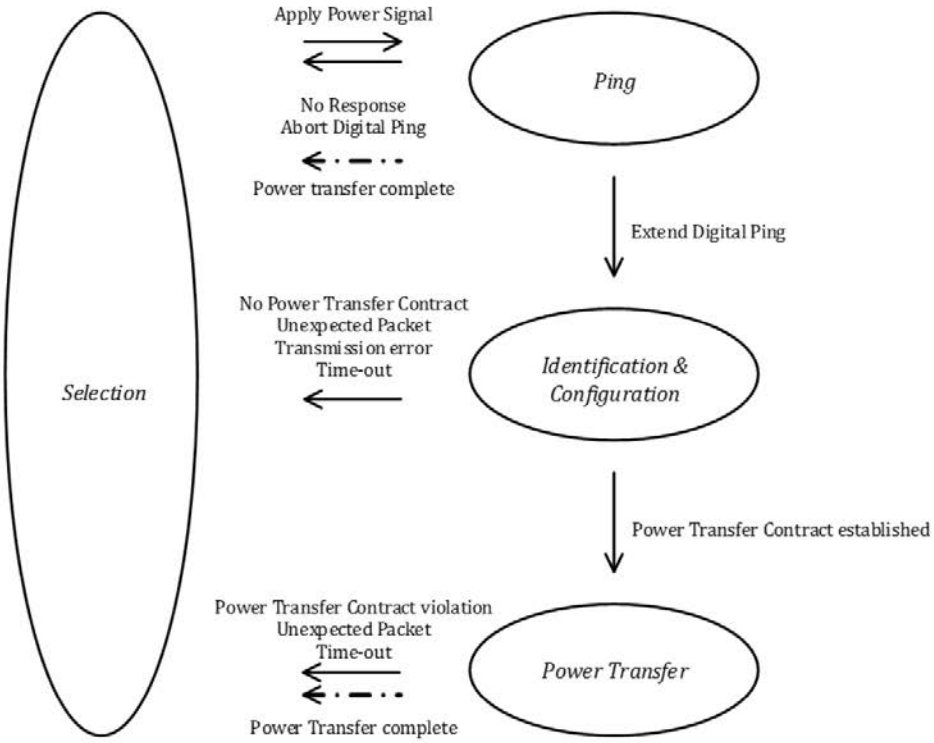

123. The above non-limiting examples illustrate Samsung's infringement of claims 1 and 3 of the '440 patent. Samsung infringes additional claims in the '440 patent, including for example claims 13 and 27, with the specific infringement contentions to be presented in discovery per the Court's procedure.

COUNT THREE: PATENT INFRINGEMENT OF THE '349 PATENT

124. Mojo Mobility incorporates by reference the preceding paragraphs as if fully stated herein.

125. Claims 1 and 26 of the '349 patent are reproduced below:

1. A system for inductive power transfer comprising:

a charger, wherein the charger is an inductive charger, and the charger includes:

a printed circuit board having a charger coil, wherein the charger coil has a substantially planar charger surface;

a substantially planar magnetic layer under the charger coil opposite the charger surface; and

a charger drive circuit, wherein the charger drive circuit includes a resonant capacitor and a FET switch to apply an alternating voltage to the charger coil; and

a first mobile device that includes a receiver to inductively receive power for the first mobile device, wherein the receiver includes:

a solenoid, wherein the solenoid includes:

a magnetic core having a relative magnetic permeability exceeding 1 and having first and second ends; and

Litz wire wrapped around a section of the magnetic core forming a wire wound section around the magnetic core, with the magnetic core extending beyond the wire wound section; and

a receiver electronic circuit, wherein the receiver electronic circuit includes a resonant capacitor and a rectifier; and

wherein:

the charger further includes a means for positioning the receiver in a power transfer position, proximate to the charger surface, to inductively transfer power to the receiver of the first mobile device;

the charger drive circuit is configured to drive the charger coil at one or more operating frequencies to inductively transfer power from the charger to the receiver when the receiver is positioned in the power transfer position, wherein when the receiver is positioned in the power transfer position, a tuned circuit, including the charger coil and the resonant capacitor of the charger drive circuit and the solenoid and the resonant capacitor of the receiver electronic circuit, has a resonant frequency that allows the charger to transfer the power to the receiver at the one or more operating frequencies;

the charger coil includes a conductor patterned to include multiple, substantially concentric turns for generating a magnetic flux through a first end of the solenoid when the receiver is placed in the power transfer position, wherein an outermost of the concentric turns defines a perimeter of a charger coil area;

the multiple concentric turns, when driven by the charger drive circuit, generate a magnetic field that is substantially perpendicular to the charger surface at a geometric center of the charger coil area,

the charger coil area is larger than an area of the first end and larger than an area of the second end of the magnetic core of the solenoid;

the magnetic layer of the charger extends beyond the charger coil area; and

when the receiver is in the power transfer position, the first end of the magnetic core is located proximate to the charger coil area above the charger surface to receive magnetic flux from the charger coil area and guide the magnetic flux in a closed magnetic loop from the charger coil area through the solenoid and return through the charger magnetic layer to the charger coil area to form the closed magnetic loop.

26. A charger for inductive charging, the charger comprising:

a printed circuit board having a charger coil, wherein the charger coil has a substantially planar charger surface;

a substantially planar magnetic layer under the charger coil opposite the charger surface;

a charger drive circuit, wherein the charger drive circuit includes a resonant capacitor and a FET switch to apply an alternating voltage to the charger coil; and

means for positioning a receiver in a power transfer position, which is proximate to the charger surface, to inductively transfer power to the receiver, wherein the receiver is included in a mobile device to inductively receive power for the mobile device, and the receiver includes:

a solenoid, wherein the solenoid includes:

a magnetic core having a relative magnetic permeability exceeding 1 and having first and second ends; and

Litz wire wrapped around a section of the magnetic core forming a wire wound section around the magnetic core, with the magnetic core extending beyond the wire wound section; and

a receiver electronic circuit, wherein the receiver electronic circuit includes a resonant capacitor and a rectifier; and

wherein:

the charger drive circuit is configured to drive the charger coil at one or more operating frequencies to inductively transfer power from the charger to the receiver when the receiver is positioned in the power transfer position, wherein when the receiver is positioned in the power transfer position, a turned circuit, which includes the charger coil and the resonant capacitor of the charger drive circuit and the solenoid and the resonant capacitor of the receiver electronic circuit, has a resonant frequency that allows the charger to transfer the power to the receiver at the one or more operating frequencies;

the charger coil includes a conductor patterned to include multiple, substantially concentric turns for generating a magnetic flux through a first end of the solenoid when the receiver is placed in the power transfer position, wherein an outermost of the concentric turns defines a perimeter of a charger coil area;

the multiple substantially concentric turns, when driven by the charger drive circuit, generate a magnetic field that is substantially perpendicular to the charger surface at a geometric center of the charger coil area,

the charger coil area is larger than an area of the first end and larger than the area of the second end of the magnetic core of the solenoid;

the magnetic layer of the charger extends beyond the charger coil area; and

when the receiver is in the power transfer position, the first end of the magnetic core is located proximate to the charger coil area above the charger surface to receive magnetic flux from the charger coil area and guide the magnetic flux in a closed magnetic loop from the charger coil area through the solenoid and return through the charger magnetic layer to the charger coil area to form the closed magnetic loop.

126. Samsung accused products which can transfer and/or receive wireless power as specified by ’349 claims 1 and/or 26 infringe those claims. This includes Samsung pen charger products which support, hold and wirelessly charge a stylus pen as specified by claims 1 and/or 26 as well as Samsung stylus pens that receive wireless power as specified by these claims. Samsung accused products that infringe claims 1 and/or 26 of the ’349 patent (and/or any other claims in the patent) are herein collectively the “’349 accused products.” In the following paragraphs, infringement of claims 1 and 26 by way of the Samsung Galaxy S22 Ultra (“S22 Ultra”) is illustrated to provide a non-limiting example of Samsung’s infringement of the ’349 patent.

127. ’349 claim 1 begins, “A system for inductive power transfer comprising.” As a non-limiting example, the S22 Ultra with included S Pen fits this description, as the S22 Ultra transfers power inductively to the S Pen to charge the S Pen battery when the S Pen is placed in the housing and charging slot of the S22 Ultra for the S Pen.

https://www.samsung.com/us/smartphones/galaxy-s22-ultra/buy/galaxy-s22-ultra-128gb-unlocked-sm-s908uzkaxaa/

https://www.samsung.com/uk/support/mobile-devices/how-to-check-the-battery-of-the-s-pen/

How to check the battery of the S Pen

Ever since the launch of the Note9, the S Pen comes enabled with Bluetooth LE (Low Energy). This connectivity enables remote control features such as using the button to take a photo from a distance or to present a presentation from afar.

The Note10 took the connectivity to another level introducing Air Actions and with it came an enhanced S Pen with a better battery to make the most of the fun, new features.

Although the S Pen battery is built to last, it does need to be charged every now and again if you want to be able to use all these new features. Luckily, keeping the battery topped up is easy. Simply insert the S Pen into your Galaxy Note device or attach your S Pen to the magnetic groove on the back of your Galaxy Tab to recharge it.

128. Internal images of the S22 Ultra and S-pen are shown below with various components labeled. The first image on the right is a screen capture from a YouTube post entitled, "Galaxy S22 Ultra Teardown – Can the S-Pen hole Leak?!" available at:

https://www.youtube.com/watch?v=NmnLzYWuLGo

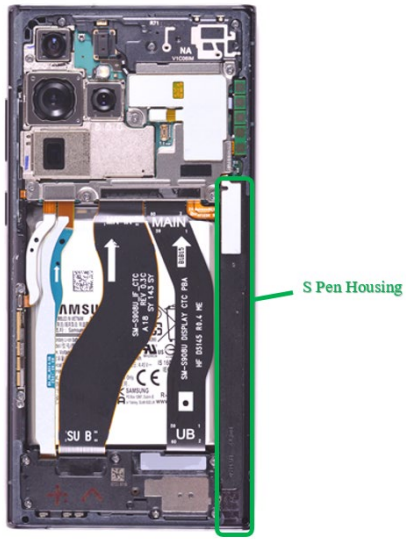

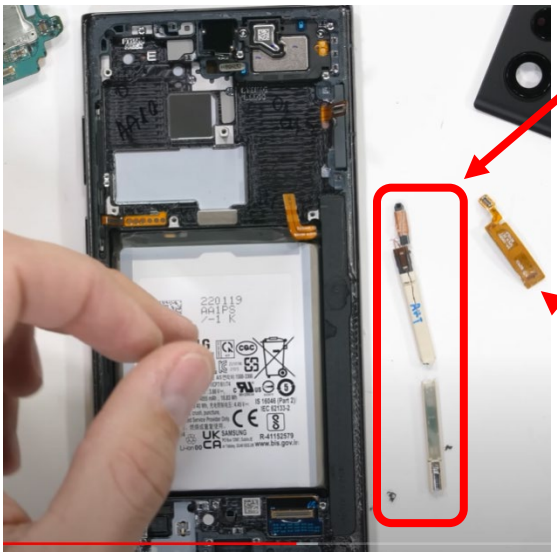

S22 Ultra S Pen

S Pen Charger coils

129. ’349 claim 1 further recites “a charger, wherein the charger is an inductive charger, and the charger includes: a printed circuit board having a charger coil, wherein the charger coil has a substantially planar charger surface; a substantially planar magnetic layer under the charger coil opposite the charger surface; and a charger drive circuit, wherein the charger drive circuit includes a resonant capacitor and a FET switch to apply an alternating voltage to the charger coil.” As a non-limiting example, the S22 Ultra meets this part of the claim.

130. The S22 Ultra includes an inductive charger for the S Pen. The charger includes a printed circuit board with charger coils, a planar charger surface for the S Pen, and a planar magnetic layer under the charger coils opposite the charger surface. An internal image of the S22 Ultra is shown below along with x-ray images of the S22 Ultra S-pen charger coils and S-pen receiver coil.

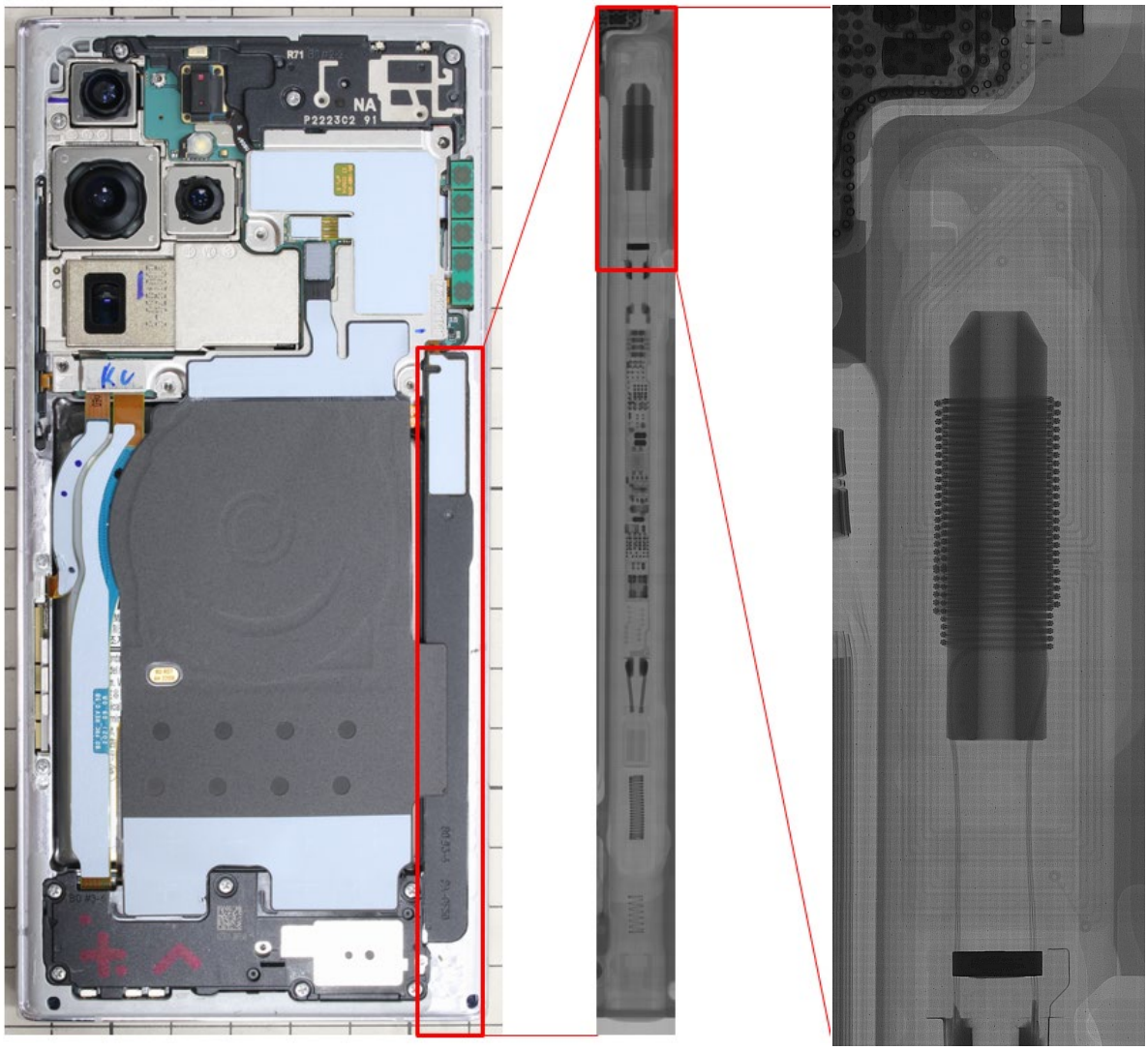

131. The S22 Ultra S Pen charger coils are shown below on the left, and the planar magnetic layer under the charger coils are shown on the right.

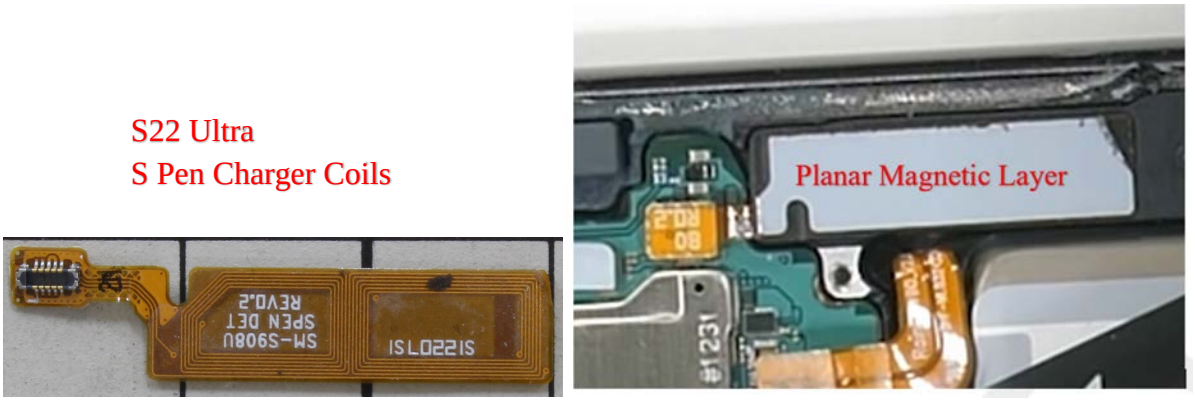

132. An x-ray image of the S22 Ultra S-pen charger coils in position in the S-pen charger housing is shown below (with the S-pen removed), with an enlarged x-ray image of the charger coils shown beneath.

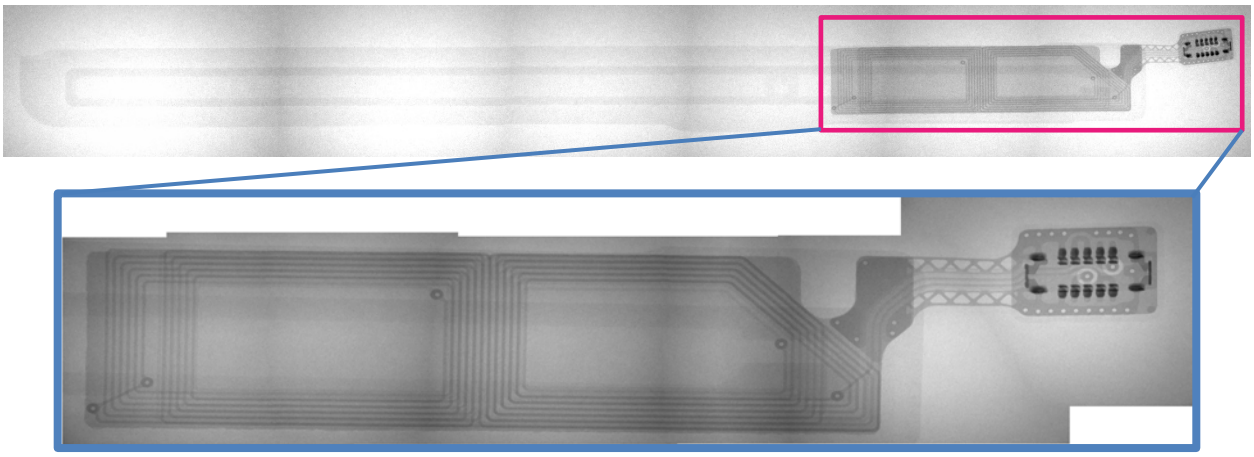

133. As a non-limiting example and on information and belief, the charger includes a charger drive circuit with a resonant capacitor and a FET switch to apply an alternating voltage to each of the charger coils.

134. ’349 claim 1 further recites “a first mobile device that includes a receiver to inductively receive power for the first mobile device, wherein the receiver includes: a solenoid, wherein the solenoid includes: a magnetic core having a relative magnetic permeability exceeding 1 and having first and second ends; and Litz wire wrapped around a section of the magnetic core forming a wire wound section around the magnetic core, with the magnetic core extending beyond the wire wound section; and a receiver electronic circuit, wherein the receiver electronic circuit includes a resonant capacitor and a rectifier.” As a non-limiting example, the S Pen meets this part of the claim.

135. As a non-limiting example, the S-pen is a first mobile device that includes a receiver to inductively receive power and includes a solenoid, a magnetic core having a relative magnetic permeability exceeding 1 and having first and second ends, and a Litz wire wrapped around a

section of the magnetic core forming a wire wound section, with the magnetic core extending beyond the wire wound section. An x-ray image of the S22 Ultra S-pen is shown below first, and shown second is a close-up x-ray image of the tip of the S-pen in the S22 Ultra charging position.

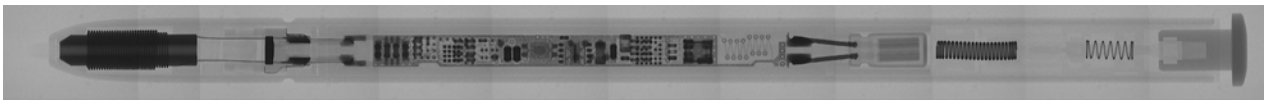

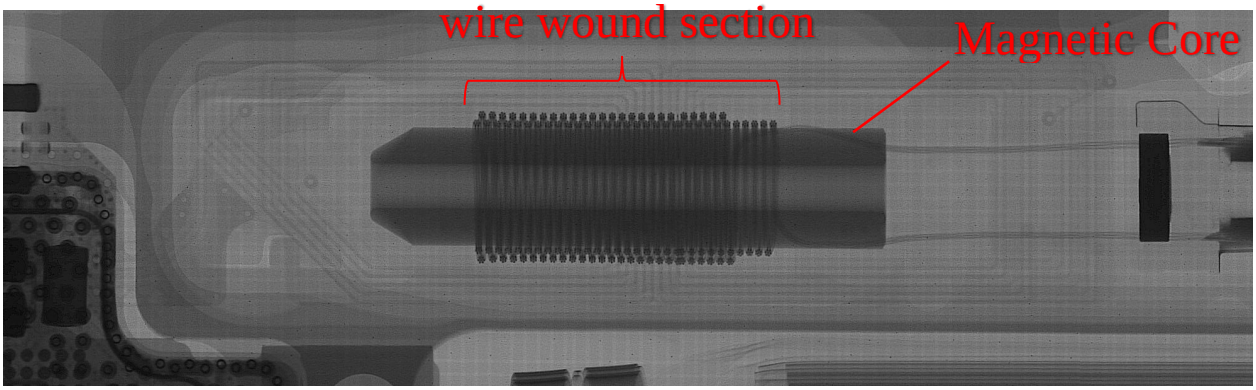

136. As a non-limiting example, the S-pen of the S22 Ultra includes a receiver electronic circuit, wherein the receiver electronic circuit includes a resonant capacitor and a rectifier. Images of S22 Ultra S-pen internals are shown below with the exterior plastic housing of the S-pen removed.

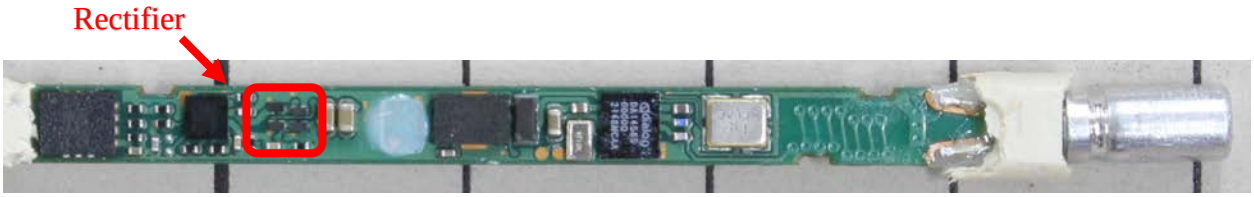

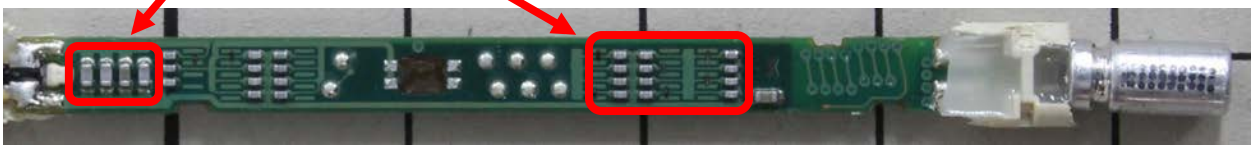

137. ’349 claim 1 further recites “the charger further includes a means for positioning the receiver in a power transfer position, proximate to the charger surface, to inductively transfer

power to the receiver of the first mobile device." As a non-limiting example, the S22 Ultra meets this part of the claim.

138. The S22 Ultra includes a slot / housing for the S Pen in which the S Pen is wirelessly charged when inserted into the S22 Ultra. Buy Galaxy S22 Ultra, 128GB (Unlocked) Phones | Samsung US. https://www.youtube.com/watch?v=NmnLzYWuLGo

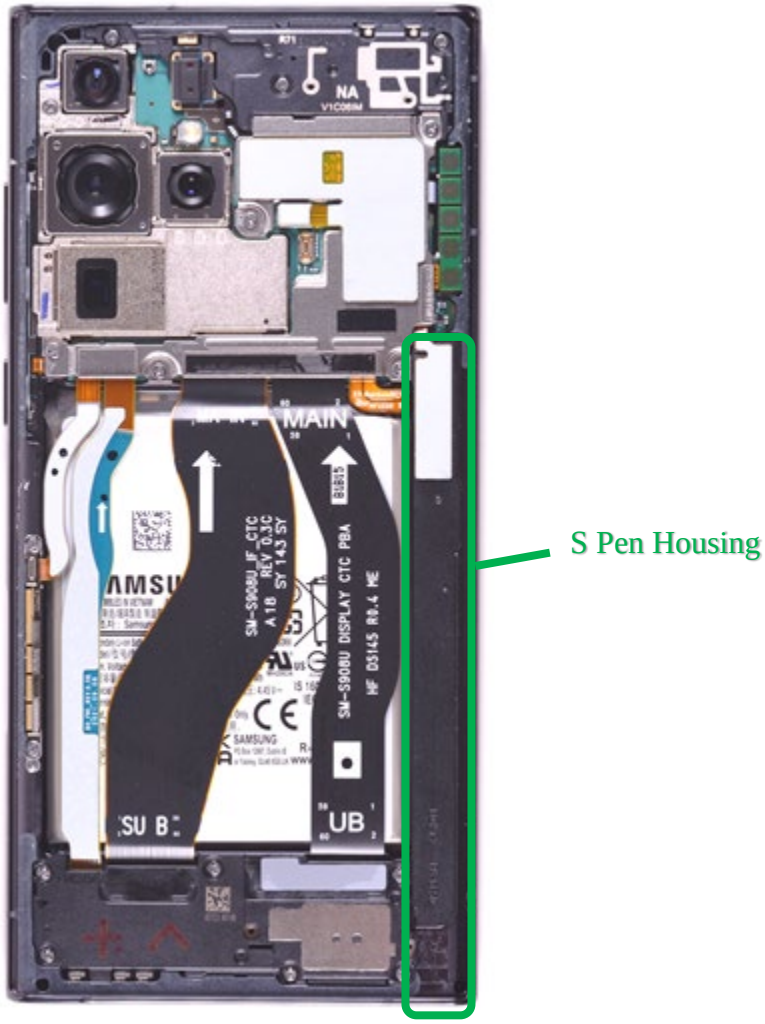

139. ’349 claim 1 further recites “the charger drive circuit is configured to drive the charger coil at one or more operating frequencies to inductively transfer power from the charger to the receiver when the receiver is positioned in the power transfer position, wherein when the receiver is positioned in the power transfer position, a tuned circuit, including the charger coil and the resonant capacitor of the charger drive circuit and the solenoid and the resonant capacitor of the receiver electronic circuit, has a resonant frequency that allows the charger to transfer the power to the receiver at the one or more operating frequencies.”

140. As a non-limiting example, the S22 Ultra meets this part of the claim. The coils and capacitors in the S22 Ultra and S Pen form a tuned circuit to provide wireless power by the S22 Ultra to the S Pen. The S22 Ultra does so at one or more operating frequencies in the range of 530

to 600 kHz, as seen in the FCC documents filed by Samsung: https://fcc.report/FCC-ID/A3LSMS908U/5574740

FCC ID:	**A3LSMS908U**
APPLICANT:	**Samsung Electronics Co., Ltd.**

Application Type:	Certification
Model:	SM-S908U
Additional Model(s):	SM-S908U1
EUT Type:	Portable Handset
Frequency Range:	110 – 148kHz, 0.53 – 0.60MHz
FCC Classification:	Part 15 Low Power Transmitter Below 1705kHz (DCD)
FCC Rule Part(s):	Part 15 Subpart C
Test Procedure(s):	ANSI C63.10-2013

141. ’349 claim 1 further recites “the charger coil includes a conductor patterned to include multiple, substantially concentric turns for generating a magnetic flux through a first end of the solenoid when the receiver is placed in the power transfer position, wherein an outermost of the concentric turns defines a perimeter of a charger coil area; the multiple concentric turns, when driven by the charger drive circuit, generate a magnetic field that is substantially perpendicular to the charger surface at a geometric center of the charger coil area, the charger coil area is larger than an area of the first end and larger than an area of the second end of the magnetic core of the solenoid.” As a non-limiting example, the S22 Ultra meets this part of the claim. An outline of the charger coil conductor pattern is shown with its multiple, substantially concentric turns where the outermost of the concentric turns defines perimeters of charger coil areas. S22 Ultra charger coil areas for generating a magnetic field that is substantially perpendicular to the charger surface at a geometric center of each of the charger coil areas is shown below.

S22 Ultra S Pen Charger Coil Areas

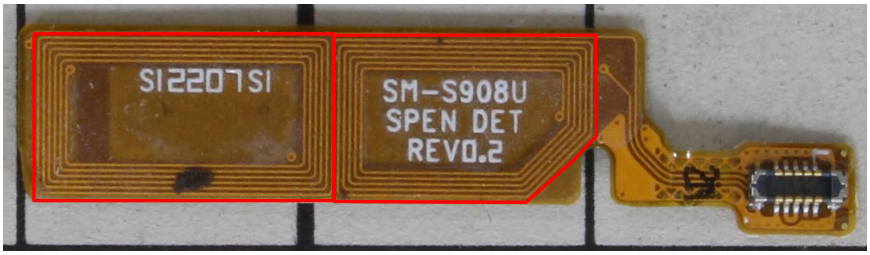

142. An x-ray image of the tip of the S22 Ultra S-pen is shown below in the charging position. This shows a conductor patterned to include multiple, substantially concentric turns for generating a magnetic flux through a first end of the solenoid when the receiver is placed in the power transfer position. Moreover, the two areas shown above of the S22 Ultra charger coils for charging the S Pen are each larger than an area of the first end and larger than an area of the second end of the magnetic core of the solenoid as shown below with the outlines of the two charger coil areas seen encompassing the ends of the magnetic core of the solenoid.

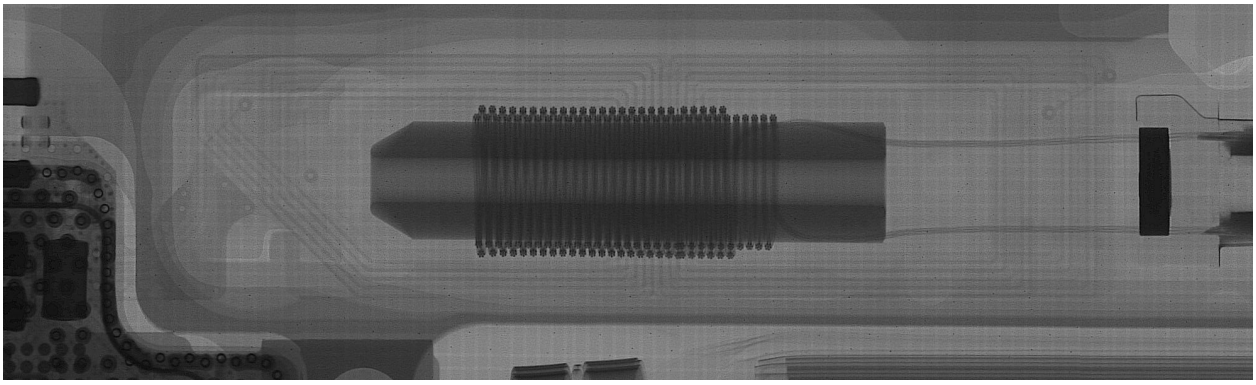

143. ’349 claim 1 further recites “the magnetic layer of the charger extends beyond the charger coil area.” As a non-limiting example, as seen below, the magnetic layer under the S Pen charger coils extends beyond each of the two charger coil areas shown above. https://www.youtube.com/watch?v=-f7B9fBJJug

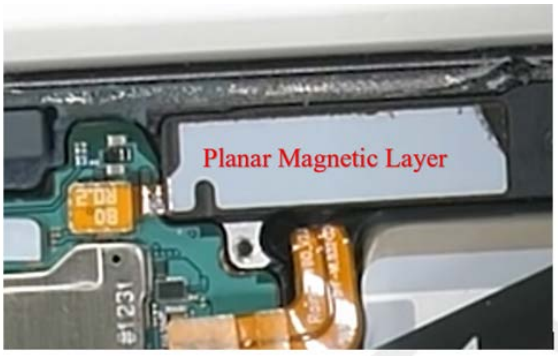

144. An x-ray image of the tip of the S Pen is seen below in the charging position in the S22 Ultra. This depicts that the magnetic layer under the S Pen charger coils extends beyond each of the two charger coil areas.

S22 Ultra S Pen Charger Coil Areas (shown in red)

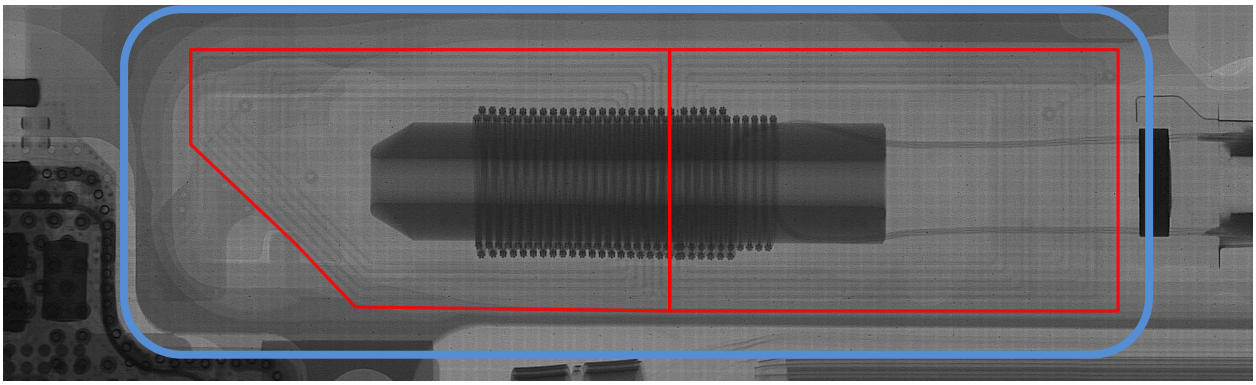

Magnetic Layer (shown in blue)

145. ’349 claim 1 further recites “when the receiver is in the power transfer position, the first end of the magnetic core is located proximate to the charger coil area above the charger surface to receive magnetic flux from the charger coil area and guide the magnetic flux in a closed magnetic loop from the charger coil area through the solenoid and return through the charger magnetic layer to the charger coil area to form the closed magnetic loop.” As a non-limiting example, the S22 Ultra meets this part of the claim, as the S Pen charger coils, the S Pen solenoid, and the magnetic layer under the S Pen charger coils form a closed magnetic loop.

146. An x-ray image of the tip of the S22 Ultra S Pen is shown below in the charging position such that the first end of the magnetic core is shown proximate to one of the two charger coil areas above the charger surface to receive magnetic flux from that charger coil area and guide the magnetic flux in a closed magnetic loop from that charger coil area through the solenoid and return through the charger magnetic layer to that charger coil area to form the closed magnetic loop:

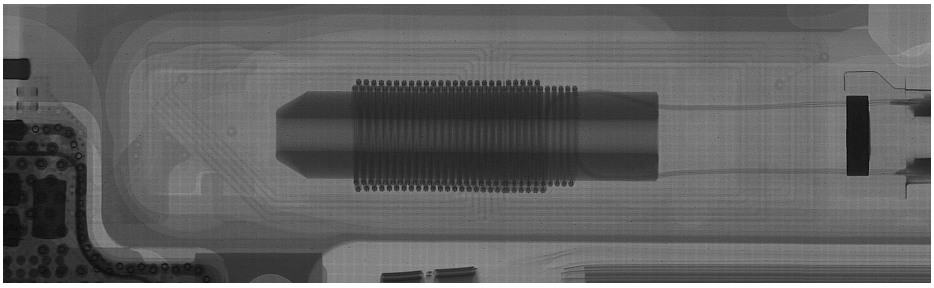

147. An x-ray image of the S22 Ultra S Pen charging coils is shown below as well as a regular image of the charging coils separated from the phone. The third image shows the receiver coil of the S Pen with its magnetic core (red box), with the plastic cover of the S Pen removed.

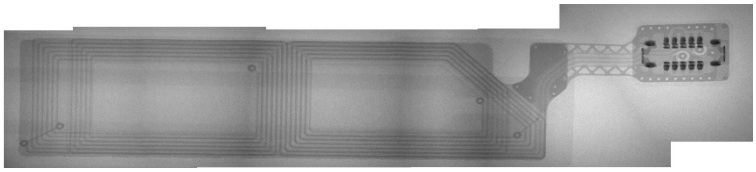

148. Claim 26 of the ’349 patent, which claims a charger with similar claim elements to that in ’349 claim 1, is also infringed per the illustrations provided above. The non-limiting example S22 Ultra thus also infringes ’349 claim 26.

149. The above non-limiting examples illustrate Samsung's infringement of claims 1 and 26 of the '349 patent. Samsung infringes additional claims in the '349 patent, including for example claims 4, 5, 7, 8, 10, 11-13, and 15-18, with the specific infringement contentions to be presented in discovery per the Court's procedure.

COUNT FOUR: PATENT INFRINGEMENT OF THE '371 PATENT

150. Mojo Mobility incorporates by reference the preceding paragraphs as if fully stated herein.

151. Claims 1 and 20 of the '371 patent are reproduced below:

1. An apparatus comprising:

a system for providing power inductively to a portable device comprising a battery and an inductive receiver unit including a receiver coil and a receiver circuit, the system comprising:

a first primary coil that is substantially planar and substantially parallel to a surface of the system for providing power inductively to the portable device;

a first drive circuit, including a FET driver, a capacitor, and a FET switch, coupled to a DC voltage input and coupled to the first primary coil, wherein during operation the first drive circuit is configured to apply an alternating electrical current to the first primary coil at an operating frequency and duty cycle to generate an alternating magnetic field in a direction substantially perpendicular to the plane of the first primary coil and the surface of the system to provide power inductively to the portable device, wherein the operating frequency is within a range of frequencies (i) that are near a resonance frequency of a circuit comprising the first primary coil and the capacitor, (ii) such that increasing values of the operating frequency within the range of frequencies would correspond to a lower voltage or current induced in an output of the receiver circuit and (iii) that allow activation and powering of the receiver unit and charging the battery of the portable device;

a first sense circuit to monitor current flow through the first primary coil during operation of the first drive circuit, wherein the first sense circuit includes a low pass filter and an amplifier to assist in detecting and amplifying a signal corresponding to a current modulation in the first primary coil induced by modulation of current in the receiver coil; and

a communication and control circuit, including a microcontroller coupled to the first drive circuit and the first sense circuit, configured to:

detect, through the first sense circuit, a received communication of information in the current modulation in the first primary coil;

operate the first drive circuit to inductively transfer power from the first primary coil to the receiver coil to activate and power the receiver unit to enable the receiver circuit to communicate the information detected in the current modulation in the first primary coil, wherein the communication of information includes information to enable the communication and control circuit to configure the inductive transfer of power to the portable device, wherein the received communication of information includes:

information corresponding to a voltage or current induced by the first primary coil at the output of the receiver circuit;

a unique identification code;

a manufacturer code;

a charge algorithm profile; and

a power requirement; and

operate the first drive circuit according to the power requirement and charge algorithm profile to provide the power from the first primary coil to the receiver coil to power the receiver unit and charge the battery of the portable device, wherein to charge the battery of the portable device the communication and control circuit is further configured to:

receive additional information in the current modulation in the first primary coil from the modulation of the current in the receiver coil corresponding to the voltage or current at the output of the receiver circuit while charging the battery of the portable device;

regulate in a closed loop feedback manner the voltage or current at the output of the receiver circuit in accordance with the received additional information corresponding to the voltage or current at the output of the receiver circuit by adjusting at least one of the operating frequency and the duty cycle of the first drive circuit while charging the battery of the portable device;

monitor for continued presence of the portable device and completion of the charging of the battery of the portable device based on the communication from the receiver circuit

and detected by the communication and control circuit through the first sense circuit; and

if the portable device is no longer present or charging is complete, stop operation of the first drive circuit for the provision of power inductively to the portable device.

20. A portable device comprising:

a battery; and

a receiver unit, coupled to the battery, configured to receive inductive power from an inductive charging system including a base unit with a primary coil and associated circuit, the receiver unit comprising:

a receiver coil which has a substantially planar shape and is located parallel to a surface of the portable device so that an alternating magnetic field, when received through the surface of the portable device from the primary coil in the base unit in a direction substantially perpendicular to the plane of the receiver coil, inductively generates a current in the receiver coil to provide power inductively to the portable device when the portable device is placed on the base unit for charging the battery of the portable device;

a ferromagnetic layer placed under the receiver coil on a side of the receiver coil away from the surface of the portable device; and

a receiver circuit powered by the inductive charging system, wherein the receiver circuit comprises:

a receiver rectifier circuit including a rectifier and a capacitor;

a receiver communication and control circuit including a microcontroller to modulate the current in the receiver coil to communicate with the base unit while the receiver circuit is being powered by the inductive charging system;

a voltage regulator coupled to an output of the receiver rectifier circuit and coupled to the microcontroller to provide a regulated voltage to power the microcontroller from the received inductive power; and

a battery charging circuit to charge the battery, wherein the battery charging circuit is coupled to the output of the receiver rectifier circuit and coupled to the battery and begins drawing current only when the output of the receiver rectifier circuit reaches a set minimum voltage value;

wherein when a current is generated in the receiver coil inductively by the primary coil in the base unit, the current is rectified and smoothed by the receiver rectifier circuit and is used by the voltage regulator to power and activate the microcontroller and used by the battery charging circuit to charge the battery of the portable device; and

wherein upon powering and activation of the receiver circuit by the primary coil in the base unit, the receiver circuit is configured to:

communicate to the base unit information corresponding to a voltage or current value at the output of the receiver rectifier circuit induced by the primary coil, a unique identifier code, a manufacturer code, a charge algorithm profile, and a power requirement; and

periodically communicate to the base unit additional information corresponding to a presently induced output voltage or current of the receiver rectifier circuit to enable the base unit to regulate in a closed loop manner the output voltage or current of the receiver rectifier circuit during the charging of the portable device.

152. Samsung accused products which can provide wireless power as specified by claim 1 infringe the claim. This includes Samsung smartphones and wireless chargers. Samsung accused products which can receive wireless power as specified by claim 20 infringe the claim. This includes Samsung smartphones, wearable products, and earbud products. Samsung accused products that infringe claim 1 and/or claim 20 of the ’371 patent (and/or any other claims in the patent) are herein collectively “’371 accused products.” In the following, infringement of ’371 claims 1 and 20 is illustrated by way of the S22 Ultra to provide a non-limiting example of Samsung’s infringement of the ’371 patent.

153. ’371 claim 1 begins, “An apparatus comprising: a system for providing power inductively to a portable device comprising a battery and an inductive receiver unit including a receiver coil and a receiver circuit, the system comprising.” As a non-limiting example, the S22 Ultra fits this description.

154. The S22 Ultra includes “Wireless PowerShare” to transfer power inductively to another device.

155. ’371 claim 1 further recites “a first primary coil that is substantially planar and substantially parallel to a surface of the system for providing power inductively to the portable device.” As a non-limiting example, the S22 Ultra meets this part of the claim.

156. The S22 Ultra includes a planar coil for transferring inductive power as specified by this part of the claim, as shown below.

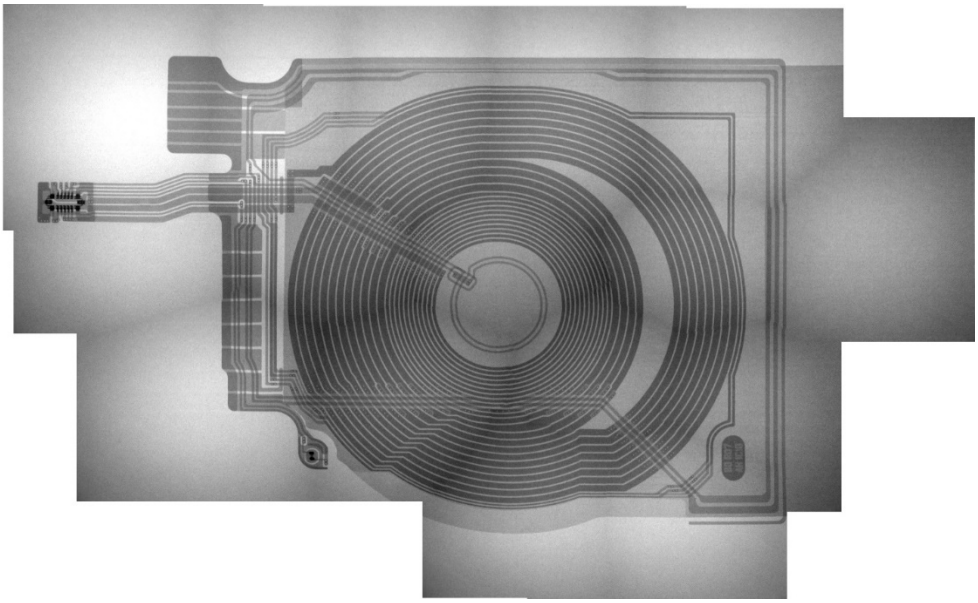

157. The following x-ray pictures show a charging coil in the S22 Ultra on the left and in the S22 smartphone (which also infringes the ’371 patent) on the right.

https://www.ifixit.com/News/57567/galaxy-s22-teardowns-apple-is-making-samsung-sweat

X-ray examination

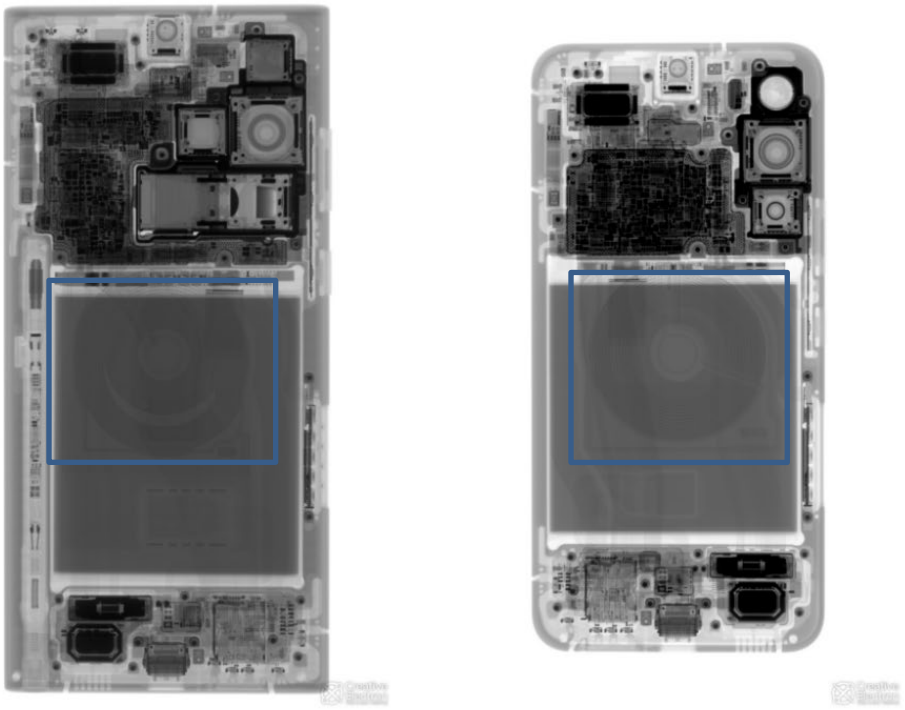

On the left is the Note-succeeding Samsung Galaxy S22 Ultra, with the “vanilla” S22 on the right.

158. ’371 claim 1 further recites “a first drive circuit, including a FET driver, a capacitor, and a FET switch, coupled to a DC voltage input and coupled to the first primary coil, wherein during operation the first drive circuit is configured to apply an alternating electrical current to the first primary coil at an operating frequency and duty cycle to generate an alternating magnetic field in a direction substantially perpendicular to the plane of the first primary coil and the surface of the system to provide power inductively to the portable device, wherein the operating frequency is within a range of frequencies (i) that are near a resonance frequency of a circuit comprising the first primary coil and the capacitor, (ii) such that increasing values of the operating frequency within the range of frequencies would correspond to a lower voltage or current induced in an output of the receiver circuit and (iii) that allow activation and powering of the receiver unit and charging the battery of the portable device.” As a non-limiting example, the S22 Ultra meets this part of the claim, as it includes a drive circuit among its circuitry that is structured and operates as specified by this part of the claim.

159. The S22 Ultra includes a drive circuit with a FET driver, a capacitor, and a FET switch, as specified by this part of the claim.

160. For example, a wireless power transceiver ASIC (e.g., the P9320S) included in the S22 Ultra includes a drive circuit with an internal FET driver and FET switch and an accompanying external capacitor.

https://www.ifixit.com/Guide/Samsung+Galaxy+S22+Ultra+Chip+ID/148073

Step 1 Main Board Side 1

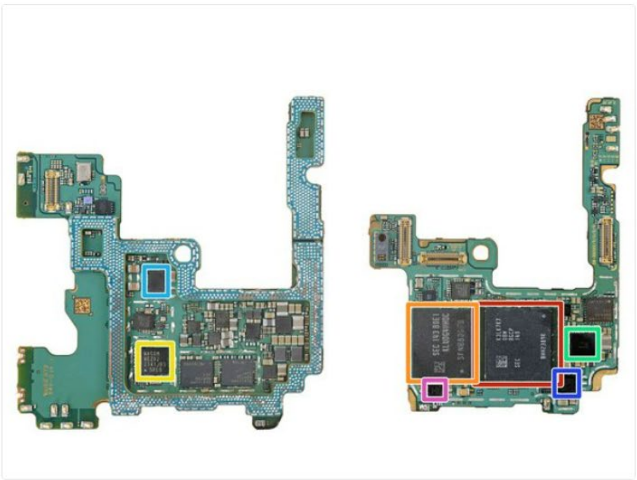

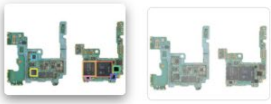

- IC Identification Pt. 1:
  - Qualcomm SM8450 Snapdragon 8 Gen 1 Octa-Core Processor layered under a Samsung K3LK7K70BM-BGCP 8 GB Mobile LPDDR5 SDRAM Memory
  - Samsung KLUDG4UHDC-B0E1 128 GB NAND Flash Memory (UFS 3.1)
  - Wacom WEZ02 Digitizer Controller
  - Maxim MAX77705C Power Management
  - Renesas P9320S Wireless Power Transceiver
  - NXP Semiconductor PCA9468 Battery Charger
  - Cirrus Logic CS35L40 Audio Amplifier

161. Upon information and belief, the Renesas P9415-R transceiver ASIC datasheet is representative of the wireless power transceiver ASIC in the S22 Ultra with respect to ’371 claims 1 and 20. Ex. J.

162. A FET driver, a capacitor, and a FET switch, as specified by this part of the claim, are shown below in the representative P9415-R ASIC datasheet (green and red boxes).

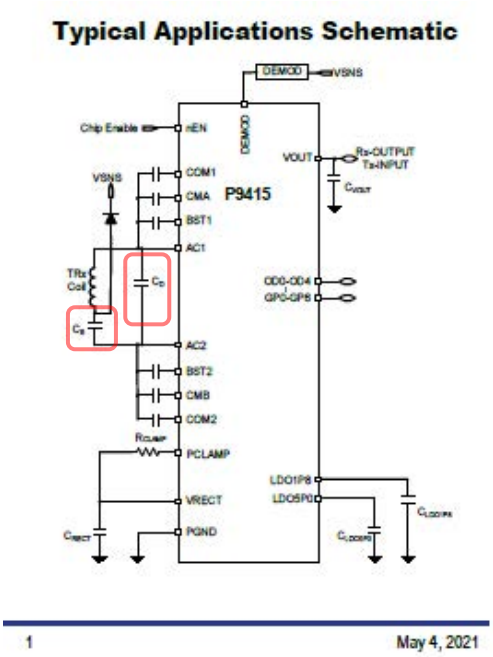

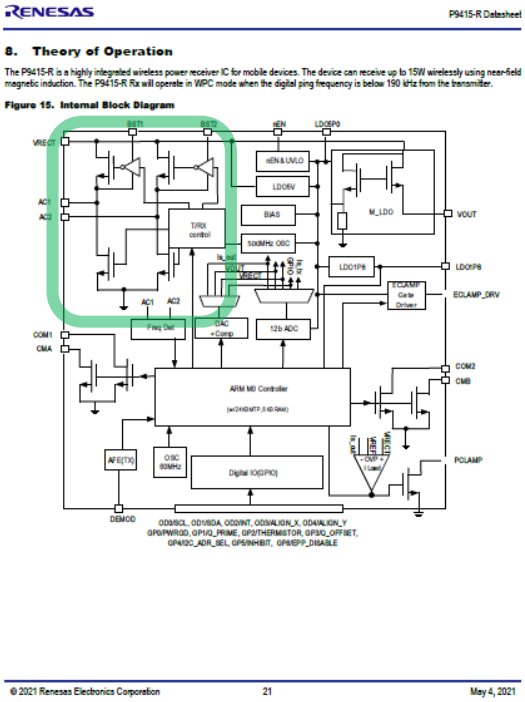

163. During operation of the S22 Ultra in the PowerShare mode as an inductive charging system, the drive circuit is coupled to a DC voltage input and coupled to the primary coil. As a non-limiting example, the S22 Ultra has a DC voltage input coupled to a DC power source (e.g., an internal battery and/or an external DC power adaptor) and coupled by the drive circuit to the primary coil for passing a current through the coil, as shown below with the P9415-R ASIC datasheet as a representative example. For example, in the Wireless PowerShare mode, the VOUT pin of the P9415-R ASIC is a DC voltage input as specified by this part of the claim. As seen below, in the transmitter mode, the DC voltage from a Boost Regulator (red box) (a power supply) is provided to the VOUT pin on the P9415-R ASIC (functioning as a VIN pin in transmit / WattShare / PowerShare mode); the P9415-R ASIC requires a DC voltage applied as input at the VOUT pin in the transmit / WattShare / PowerShare mode.

8.4 WattShare™ (TRx) Mode Functions

The P9415-R can be configured as a wireless power transmitter. The device uses an on-chip full/half-bridge inverter, a PWM generator, a modulator/demodulator for communication, and a microcontroller to produce an AC power signal to drive external L-C tank to operate as a wireless power transmitter (TRx). The P9415-R uses the same L-C tank in both Rx mode and TRx mode.

8.4.1 Enabling WattShare™ (TRx) Mode

In TRx mode, the power needs to be applied on the VOUT pin which is the same node as the power receiver output when the device operates in Rx Mode. The Application processor (AP) must adhere to the following procedure to enable TRx mode.

1. AP must ensure that the VOUT pin is not connected to the battery charger. It must enable the power supply on VOUT.
2. AP waits for the interrupt register 0x30 bit 7 (TX_INIT_INT) that indicates TRx mode initialization is finished
3. AP writes 0x0001 to 0x0076 (2 bytes) to enable TRx mode.

The P9415-R starts sending digital pings after enabling TRx mode. The digital ping frequency is 145kHz and the normal operating frequency range is from 130kHz to 145kHz in the default configuration. It can be changed to 110 – 148kHz using the *P9415-R Wireless Power Pro GUI*.

Figure 21. Enabling WattShare™ (TRx) Mode

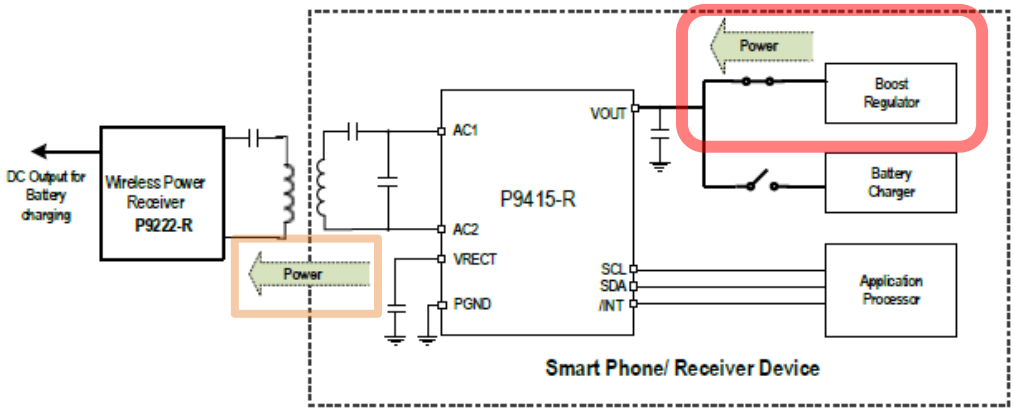

8.4.2 WattShare™ Mode Input Voltage

The P9415-R can transfer up to 5W of power in TRx mode. It follows the WPC 1.2.4 BPP protocol to transfer the power to other Qi-certified receivers such as Mobile devices and Earbud charging cases. The maximum power delivered in TRx mode is dependent on the input voltage on VOUT pin, coil characteristics such as AC resistance, and the friendly metal around the coil. Because the coil used for power transfer in TRx mode has high AC resistance compared to transmitter coil used in a charging pad, the input voltage on the VOUT pin in TRx mode must be around 7 to 9V to deliver 5W of power to the receiver.

164. As shown below, in the Wireless PowerShare mode, the DC voltage is applied to the VOUT pin (orange colored rectangle) of the P9415-R ASIC shown in the left and right figures below. The VOUT pin is a DC voltage input when in the wireless charging transmitter mode [Tx-INPUT functioning as a VIN], whereas it provides an output voltage when in the wireless charging

receiver mode [Rx-OUTPUT functioning as a VOUT]. The VOUT pin is coupled to the charging coils with the pins AC1/AC2 (blue colored rectangle) through the drive circuit FETs (green rectangle) and through the M_LDO FETs (yellow rectangle).

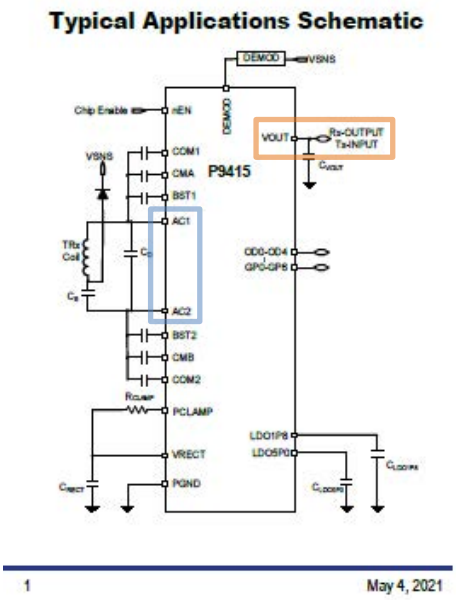

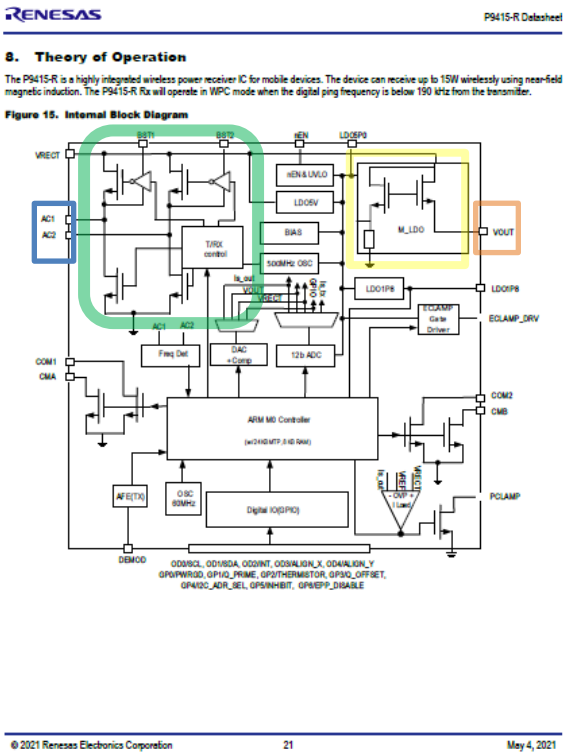

165. The drive circuit, during the Wireless PowerShare operation, applies an alternating electrical current to the primary coil at an operating frequency and duty cycle to generate an alternating magnetic field in a direction substantially perpendicular to the plane of the primary coil and the surface of the system to provide power inductively to the portable device.

166. The S22 Ultra does so in the Wireless PowerShare mode, as illustrated for example below in the representative P9415-R ASIC datasheet.

RENESAS P9415-R Datasheet

8.4 WattShare™ (TRx) Mode Functions

The P9415-R can be configured as a wireless power transmitter. The device uses an on-chip full/half-bridge inverter, a PWM generator, a modulator/demodulator for communication, and a microcontroller to produce an AC power signal to drive external L-C tank to operate as a wireless power transmitter (TRx). The P9415-R uses the same L-C tank in both Rx mode and TRx mode.

RENESAS P9415-R Datasheet

8.4.3 Demodulator

In TRx Mode, the Rx sends WPC protocol packets to the P9415-R. Using the demodulation (DEMOD) filter shown in Figure 22 and the internal demodulator circuitry, the P9415-R decodes the ASK modulation packets Rx sent. Based on the packet information, the P9415-R modulates the transmitted power by adjusting the operating frequency or duty cycle and detects a foreign object between Tx and Rx.

167. That the S22 Ultra does so in the Wireless PowerShare mode is further illustrated by the S22 Ultra's ability to wirelessly charge Samsung and other OEM devices adhering to the WPC Standard for receiving power. E.g., WPC 1.2.4 Standard, Parts 1 and 2, Interface Definitions, pages 12 and 47.

Operating Point	The combination of the frequency, duty cycle, and amplitude of the voltage that is applied to the Primary Cell.
Packet	A data structure for communicating a message from a Power Receiver to a Power Transmitter or vice versa. A Packet consists of a preamble, a header byte, a message, and a checksum. A Packet is named after the kind of message that it contains.

Wireless Power Consortium

12

WIRELESS POWER CONSORTIUM The Qi Wireless Power Transfer System Power Class 0 Specification Parts 1 and 2: Interface Definitions

Version 1.2.4 Information interface

The Power Transmitter uses the Control Error Value and the actual Primary Cell current to determine a new Primary Cell current. After the system stabilizes from the communications of the Control Error Packet, the Power Transmitter has a short time window to control its actual Primary Cell current towards the new Primary Cell current. Within this window, the Power Transmitter reaches a new Operating Point: the amplitude, frequency, and duty cycle of the AC voltage that is applied to the Primary Cell. Subsequently, the Power Transmitter keeps its Operating Point fixed in order to enable the Power Receiver to communicate additional control and status information. For details, see Section 5.1.2.6.1, *Power transfer control.*

Wireless Power Consortium

47

168. The magnetic field generated by the charging coils in the S22 Ultra in the Wireless PowerShare mode is substantially perpendicular to the plane of the coil, as shown above with respect to the "base unit" part of '208 claim 1, referring, e.g., to WPC 1.2.4 Standard, Introduction, page 9 (showing the magnetic field lines).

169. The S22 Ultra meets the frequency range and resonance frequency aspects of this claim. For example, the WPC Standard as seen below specifies an operating frequency f_{op} of 100-200 kHz and a primary coil resonance frequency f_p of 100 kHz. The WPC Standard similarly specifies a secondary (receiver) resonance frequency f_s of 100 kHz. The WPC Standard further specifies that the transmitter use the part of the operating frequency wherein increasing the operating frequency results in lower primary (transmitter) current and thus lower current or voltage in the receiver. E.g., WPC 1.2.4 Standard, Parts 1 and 2, Interface Definitions, pages 37 and 38.

Figure 10 illustrates a simplified model of the system comprising a Power Transmitter on the left and a Power Receiver on the right. For clarity, the load circuit is drawn separately from the Power Receiver. The Power Transmitter consists of a power source (u_{op}, f_{op}), a capacitance C_p, an inductance L_p, and a resistance R_p. The power source supplies a sinusoidal voltage u_{op} at a frequency f_{op}. The Power Receiver consists of a capacitance C_s, an inductance L_s, and a resistance R_s. A load having an impedance Z_L is connected to the output terminals of the Power Receiver. The symbols u_L, i_L, i_p, and k_{op} represent the load voltage, load current, Primary Coil current, and coupling factor.

Figure 10. Simplified system model

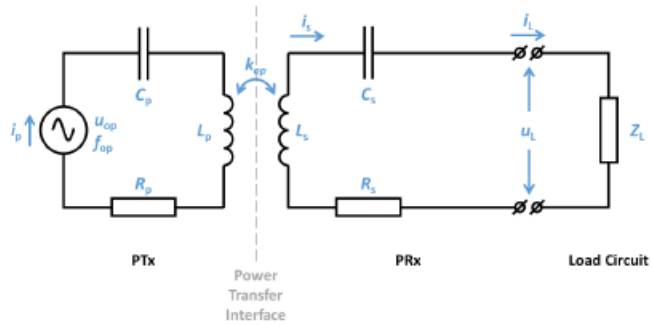

For simplicity the Power Receiver in the model includes neither a rectifier nor a resonance at a frequency f_d as defined in Sections 3.1.2 and 3.1.1. The absence of the additional resonance does not significantly affect the results discussed below. The effect of the rectifier is described at the end of this section.

Table 7 lists the parameters associated with the system model in Figure 10. Instead of the resonant capacitances C_p and C_s, and the resistances R_p and R_s, the resonant frequencies f_p and f_s, and quality factors Q_p and Q_s are provided. The relations between these parameters are as follows:

$$f_p = \frac{1}{2\pi\sqrt{L_p C_p}}, \quad f_s = \frac{1}{2\pi\sqrt{L_s C_s}}, \quad Q_p = \frac{2\pi f_p L_p}{R_p}, \quad Q_s = \frac{2\pi f_s L_s}{R_s}$$

Table 7. Parameters of the simplified model

Power Transmitter		
L_p	25	µH
f_p	100	kHz
Q_p	100	
u_{op}	2...24	V (pk)
f_{op}	100...200	kHz
u_{ping}	24	V (pk)
f_{ping}	175	kHz

Power Receiver		
L_s	35	µH
f_s	100	kHz
Q_s	40	
u_L	12	V (rms)
i_L	1.5	A (rms)
Z_L	0.1...1000	Ω
Z_{ping}	800	Ω

Power Transmitter operation is subject to these constraints:

- The PTx only uses the part of its Operating Frequency range where the Primary Coil current decreases while the Operating Frequency increases. This constraint ensures that the Control Error Packets from the Power Receiver have a consistent effect: a positive Control Error Value causes the Primary Coil current to increase, and a negative Control Error Value causes the Primary Coil current to decrease.

WIRELESS POWER CONSORTIUM

The Qi Wireless Power Transfer System Power Class 0 Specification

Parts 1 and 2: Interface Definitions

Version 1.2.4

Power interface

The Power Transmitter controls the amount of power it transfers by adjusting the amplitude of its voltage and frequency in the ranges given in Table 7. At start-up, it uses the ping voltage u_{ping} and ping frequency f_{ping}. To control the power up, it decreases its frequency while keeping its voltage constant at the maximum value. To control the power down, it increases the frequency at constant voltage, and after reaching the maximum frequency value decreases the voltage while keeping the frequency constant at that maximum.

170. The frequency range of operation for the S22 Ultra operating as a wireless charger in the PowerShare mode is seen in an FCC filing by Samsung below, showing the frequency of operation as 110-148 kHz near the resonance frequency.

https://fcc.report/FCC-ID/A3LSMS908U/5574740

MEASUREMENT REPORT
FCC Part 15C Wireless Power Transfer

Applicant Name:
Samsung Electronics Co., Ltd.
129, Samsung-ro,
Yeongtong-gu, Suwon-si
Gyeonggi-do, 16677, Korea

Date of Testing:
9/22/2021 – 12/7/2021
Test Report Issue Date:
12/7/2021
Test Site/Location:
PCTEST Lab. Columbia, MD, USA
Test Report Serial No.:
1M2109090102-20-R2.A3L

FCC ID:	**A3LSMS908U**
APPLICANT:	**Samsung Electronics Co., Ltd.**

Application Type:	Certification
Model:	SM-S908U
Additional Model(s):	SM-S908U1
EUT Type:	Portable Handset
Frequency Range:	110 – 148kHz, 0.53 – 0.60MHz
FCC Classification:	Part 15 Low Power Transmitter Below 1705kHz (DCD)
FCC Rule Part(s):	Part 15 Subpart C
Test Procedure(s):	ANSI C63.10-2013

171. That the S22 Ultra meets the frequency range and resonance aspects of this claim with its Wireless PowerShare mode is also indicated by, for example, the following in the representative P9415-R ASIC datasheet regarding transmitter operation in general.

The voltage at VRECT and the current through the rectifier are sampled periodically and digitized by the ADC. The digital equivalents of the voltage and current are supplied to the internal control logic, which decides whether the loading conditions on VRECT indicate that a change in the operating point is required. If the load is heavy enough to bring the voltage at VRECT below its target, the transmitter is instructed to move its frequency lower, closer to resonance. If the voltage at VRECT is higher than its target, the transmitter is instructed to increase its frequency. To maximize efficiency, the voltage at VRECT is programmed to decrease as the LDO's load current increases.

172. '371 claim 1 further recites "a first sense circuit to monitor current flow through the first primary coil during operation of the first drive circuit, wherein the first sense circuit includes a low pass filter and an amplifier to assist in detecting and amplifying a signal corresponding to a current modulation in the first primary coil induced by modulation of current in the receiver coil." As a non-limiting example, the S22 Ultra meets this part of the claim, as it includes a sense circuit among its circuitry that is structured and operates as specified by this part of the claim. This includes, for example, the Analog Front End (AFE) (red box) included in the representative P9415-R ASIC and associated demodulation circuitry, as shown below.

173. The AFE senses a modulation in the current in the coil of the S22 Ultra in the Wireless PowerShare mode to detect a modulation of the current by the receiver coil (in the device being charged) to detect a communication and also to sense the presence or absence of the device being charged. The AFE receives a demodulated signal from the coil through a demodulation circuit external to the ASIC, as shown below.

RENESAS P9415-R Datasheet

8.4 WattShare™ (TRx) Mode Functions

The P9415-R can be configured as a wireless power transmitter. The device uses an on-chip full/half-bridge inverter, a PWM generator, a modulator/demodulator for communication, and a microcontroller to produce an AC power signal to drive external L-C tank to operate as a wireless power transmitter (TRx). The P9415-R uses the same L-C tank in both Rx mode and TRx mode.

8. Theory of Operation

The P9415-R is a highly integrated wireless power receiver IC for mobile devices. The device can receive up to 15W wirelessly using near-field magnetic induction. The P9415-R Rx will operate in WPC mode when the digital ping frequency is below 190 kHz from the transmitter.

Figure 15. Internal Block Diagram

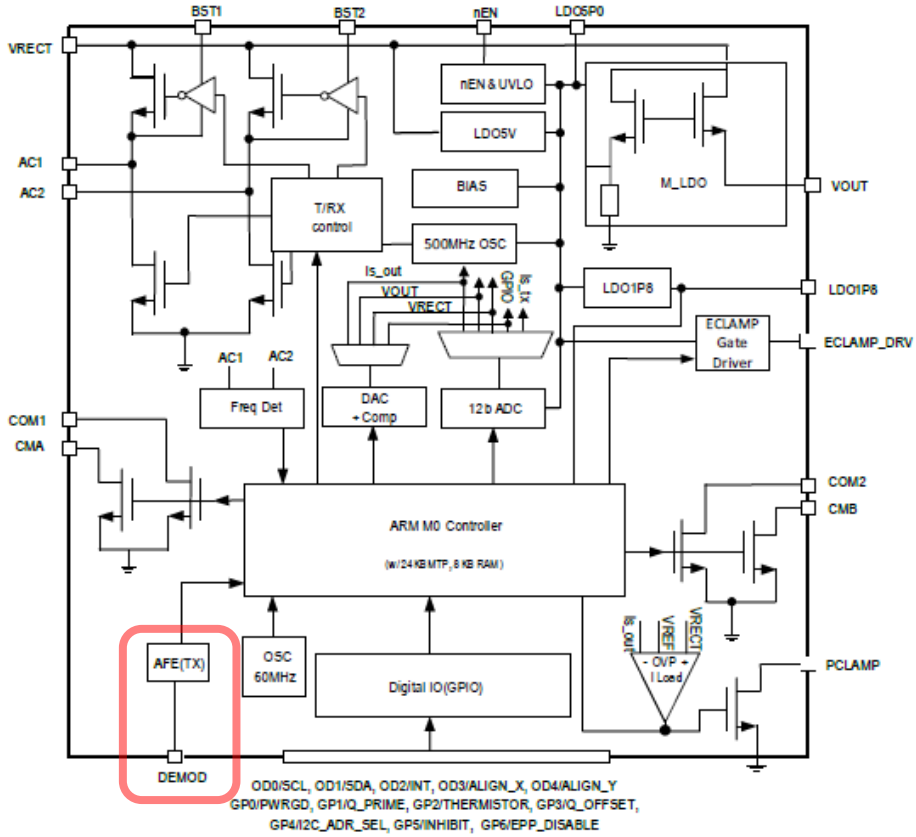

174. The following from the P9415-R datasheet is representative of how the wireless power ASIC and associated external circuitry in the S22 Ultra receive communication from the device being wirelessly powered/charged by way of current modulation.

8.2.5 WPC Modulation/Communication

The P9415-R operates in WPC using a single LC tank Rx coil and requires AC modulation capacitor connections for WPC communication. The LC tank also should be tuned to achieve maximum efficiency (C_{MA}, C_{MB}, C_{M1}, C_{M2} connected to pins CMA, CMB COM1, COM2) in order to accomplish WPC modulation.

Figure 16. Rx Modulation Components

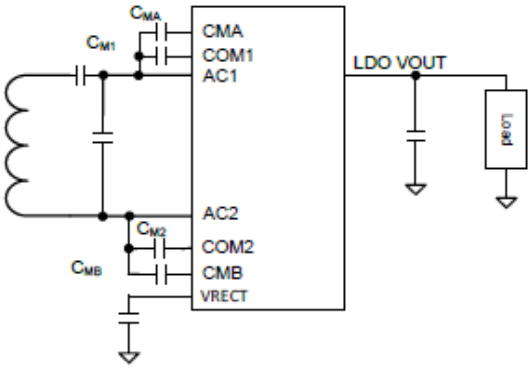

Receiver-to-transmitter communication is completed by modulating the load applied to the receiver's inductor. To the transmitter, this appears as an impedance change, which results in measurable variations of the transmitter's output waveform. Modulation is done with AC Modulation, using internal switches to connect external capacitors from AC1 and AC2 to ground.

The P9415-R communicates with the base via communication packets or decodes messages sent by WPC Rx's. Each communication packet has the following structure:

Typical Applications Schematic

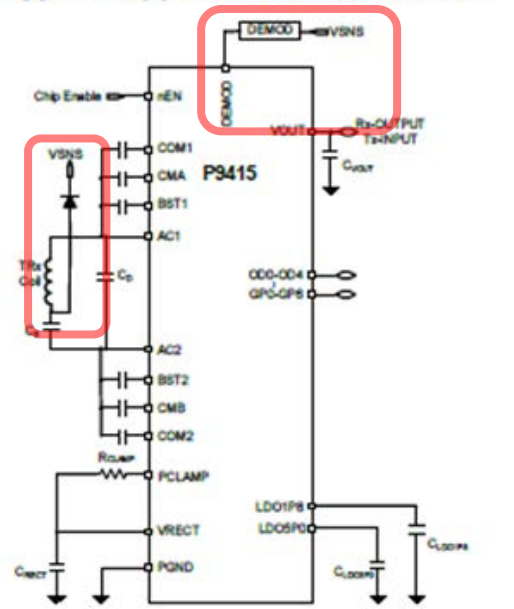

1 May 4, 2021

175. The AFE as described by Renesas includes a filter to remove noise and an amplifier.

https://www.renesas.com/us/en/products/analog-products/smart-analog#document

Analog Front End Brings Sensor and Microcontroller Together

The analog front end (AFE) is an essential system building block to a sensor circuit that amplifies and/or filters sensor signals that are often weak and may have complex electrical configurations to support different MCUs. In addition, the AFE that performs this vital bridging function is often difficult to simulate and must be adjusted because of specific component behavior, board layout, and nearby noise sources.

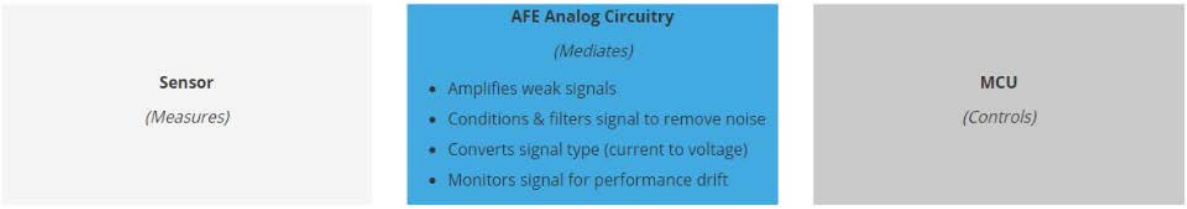

176. In addition, the representative Renesas P9415-R ASIC datasheet describes a demodulation filter for sensing the communication modulation at the primary coil before the AFE. This circuit shown includes a low pass filter as specified by this part of the claim.

RENESAS P9415-R Datasheet

8.4.3 Demodulator

In TRx Mode, the Rx sends WPC protocol packets to the P9415-R. Using the demodulation (DEMOD) filter shown in Figure 22 and the internal demodulator circuitry, the P9415-R decodes the ASK modulation packets Rx sent. Based on the packet information, the P9415-R modulates the transmitted power by adjusting the operating frequency or duty cycle and detects a foreign object between Tx and Rx.

Figure 22. WattShare™ Mode Demodulation Filter

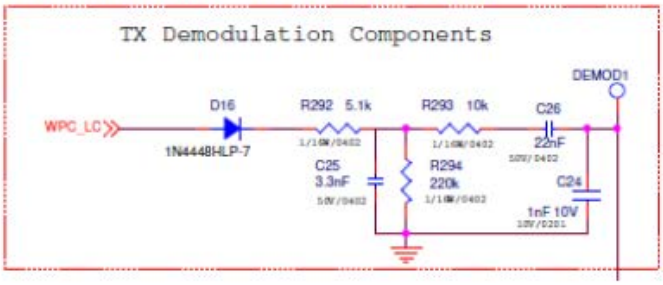

177. ’371 claim 1 further recites “a communication and control circuit, including a microcontroller coupled to the first drive circuit and the first sense circuit, configured to: detect, through the first sense circuit, a received communication of information in the current modulation in the first primary coil; operate the first drive circuit to inductively transfer power from the first primary coil to the receiver coil to activate and power the receiver unit to enable the receiver circuit to communicate the information detected in the current modulation in the first primary coil, wherein the communication of information includes information to enable the communication and control circuit to configure the inductive transfer of power to the portable device, wherein the

received communication of information includes: information corresponding to a voltage or current induced by the first primary coil at the output of the receiver circuit; a unique identification code; a manufacturer code; a charge algorithm profile; and a power requirement; and operate the first drive circuit according to the power requirement and charge algorithm profile to provide the power from the first primary coil to the receiver coil to power the receiver unit and charge the battery of the portable device, wherein to charge the battery of the portable device the communication and control circuit is further configured to: receive additional information in the current modulation in the first primary coil from the modulation of the current in the receiver coil corresponding to the voltage or current at the output of the receiver circuit while charging the battery of the portable device; regulate in a closed loop feedback manner the voltage or current at the output of the receiver circuit in accordance with the received additional information corresponding to the voltage or current at the output of the receiver circuit by adjusting at least one of the operating frequency and the duty cycle of the first drive circuit while charging the battery of the portable device; monitor for continued presence of the portable device and completion of the charging of the battery of the portable device based on the communication from the receiver circuit and detected by the communication and control circuit through the first sense circuit; and if the portable device is no longer present or charging is complete, stop operation of the first drive circuit for the provision of power inductively to the portable device." As a non-limiting example, the S22 Ultra meets this part of the claim, as it includes a communication and control circuit (including a microcontroller) among its circuitry that is structured and operates as specified by this part of the claim.

178. This is illustrated, for example, by the representative P9415-R ASIC which has an internal microcontroller coupled to the drive circuit (including internal FET drivers and FET switches and external capacitors) and the sense circuit (including the internal AFE and external

DEMOD circuit), as shown above with respect to the "first drive circuit" and "first sense circuit" parts of '371 claim 1, with the shown representative ARM M0 Controller corresponding to the "microcontroller" specified in this part of the claim.

179. That the S22 Ultra meets this part of the claim is additionally reflected by the WPC Standard which with the S22 Ultra is interoperable.

https://www.samsung.com/uk/support/mobile-devices/how-to-use-wireless-powershare/

Devices that support Wireless PowerShare

Wireless PowerShare is supported by all WPC Qi certified smartphones and Samsung wearable devices.

- **Smartphones:** A Samsung or another branded smartphone that supports wireless charging (WPC Qi-certified devices). Different devices may charge at different speeds. Other branded smartphones can vary depending on the device setting or design, even for WPC Qi certified devices.
- **Wearable devices:** Samsung wearable devices only (Gear S3/Sport, Galaxy Watch, Galaxy Watch Active, Galaxy Watch Active 2, Galaxy Buds).

https://www.samsung.com/ph/support/mobile-devices/frequently-asked-questions-bout-powershare-feature/

Wireless PowerShare gives you the power to share. We've engineered Galaxy S10 series, Note 10 series, Galaxy Fold, S20 series and Galaxy Z Flip to charge Qi-certified devices and some Samsung wearable devices like a wireless charger. Simply place the device on top of your phone — no cables necessary. Use it to power up your friend's phone, or charge your earbuds on the go.

https://www.samsung.com/us/support/answer/ANS00082564/

Compatible Samsung devices

Most Qi-Compatible Samsung devices can be charged with Wireless PowerShare, but check out the full list of compatible devices just in case. The speed and power of the charge will vary by device.

Phones that can use and also be charged with Wireless PowerShare:

- Galaxy S22, S22+, and S22 Ultra
- Galaxy S21, S21+, and S21 Ultra
- Note20 5G and Note20 Ultra 5G
- Galaxy Note10, Note10+, and Note10+ 5G
- Galaxy Fold, Z Fold2, Z Fold3 and Z Fold4
- Galaxy Z Flip, Z Flip 5G, Z Flip3 and Z Flip4
- Galaxy S20 5G, S20+ 5G, S20 Ultra 5G, and S20 FE
- Galaxy S10e, S10, S10+, and S10 5G

Other devices that can be charged by Wireless PowerShare:

- Galaxy Buds, Galaxy Buds2, Galaxy Buds+, Galaxy Buds Live, Galaxy Buds Pro, and Galaxy Buds2 Pro
- Galaxy Watch, Galaxy Watch3, Galaxy Watch4 series, Galaxy Watch5 series, Gear Sport, and Gear S3
- Galaxy S7/S7 Edge, S8/S8+, S9/S9+, Note8, and Note9
- Galaxy Watch Active and Galaxy Watch Active2

180. To be compatible with the WPC Standard, the S22 Ultra in the Wireless PowerShare mode receives communication via current modulation from the device to be wirelessly charged. E.g., WPC 1.2.4 Standard, Parts 1 and 2, Interface Definitions, page 87 (set forth above with respect to "communication interface" part of '208 claim 1).

181. To be compatible with the WPC Standard, the S22 Ultra in the Wireless PowerShare mode wirelessly powers the wireless power receiver in the device to be wirelessly charged, as reflected below. E.g., WPC 1.2.4 Standard, Parts 1 and 2, Interface Definitions, page 24.

WIRELESS POWER CONSORTIUM | The Qi Wireless Power Transfer System Power Class 0 Specification | Parts 1 and 2: Interface Definitions

Version 1.2.4 | Power interface

- A rectification circuit that provides full-wave rectification of the AC waveform using, for example, four diodes in a full-bridge configuration or a suitable configuration of active components (see Section 3.1.2, *Rectification circuit*). The rectification circuit may perform output smoothing as well. In this example, the rectification circuit provides power to both the Communications and Control Unit of the Power Receiver and the output of the Power Receiver

182. To be compatible with the WPC Standard, the S22 Ultra in the Wireless PowerShare mode wirelessly powers the receiver so that the receiver can communicate its charging characteristics as specified by this part of the claim. E.g., WPC 1.2.4 Standard, Parts 1 and 2, Interface Definitions, pages 50 and 52.

WIRELESS POWER CONSORTIUM | The Qi Wireless Power Transfer System Power Class 0 Specification | Parts 1 and 2: Interface Definitions
Version 1.2.4 | Information interface

5.1.2 Power Transmitter (PTx) perspective

This section defines a protocol that the Power Transmitter shall execute to transfer power to a Power Receiver. Note that three of the seven phases are applicable only to the Extended Power Profile if the Power Transmitter supports the Extended Power Profile.

1. *Selection* phase. Section 5.1.2.1 defines the protocol to select a Power Receiver for the power transfer.
2. *Ping* phase. Section 5.1.2.2 defines the Digital Ping.
3. *Identification & configuration* phase. Section 5.1.2.3 defines the part of the protocol that the Power Transmitter shall execute in order to identify the Power Receiver and establish a default Power Transfer Contract. This protocol extends the Digital Ping in order to enable the Power Receiver to communicate the relevant information.

WIRELESS POWER CONSORTIUM | The Qi Wireless Power Transfer System Power Class 0 Specification | Parts 1 and 2: Interface Definitions
Version 1.2.4 | Information interface

5.1.2.2 Ping phase (PTx perspective)

In the *ping* phase, the Power Transmitter shall execute a Digital Ping. This Digital Ping shall proceed as follows, with conditions appearing earlier in this list taking precedence over conditions appearing later.

- The Power Transmitter shall apply a Power Signal at the Operating Point defined for the particular Power Transmitter design (see *Part 4: Reference Designs*).
- If the Power Transmitter does not detect the start of a Packet in the time window t_{ping} after the Primary Cell current amplitude reaches 50% of the stable level, the Power Transmitter shall remove the Power Signal (i.e. reduce the Primary Cell current to zero) within $t_{terminate}$. See Figure 19(a).
- If the Power Transmitter correctly receives a Signal Strength Packet, the Power Transmitter may proceed to the *identification & configuration* phase of the power transfer, maintaining the Power Signal at the Operating Point as defined for the particular Power Transmitter design. See Figure 19(b). If the Power Transmitter does not proceed to the *identification & configuration* phase, the Power Transmitter shall remove the Power Signal within t_{expire} after the start of the Signal Strength Packet. See Figure 19(c).

183. To be compatible with the WPC Standard, the S22 Ultra in the Wireless PowerShare mode receives communications from the receiver to identify the receiver, to configure the wireless power transfer, and to conduct the wireless power transfer. E.g., WPC 1.2.4 Standard, Parts 1 and 2, Interface Definitions, page 46 (set forth above with respect to "communication interface" part of '208 claim 1).

184. To be compatible with the WPC Standard, the S22 Ultra in the Wireless PowerShare mode receives communication from the receiver to be wirelessly charged that includes the information specified by this part of the claim, including a voltage or current induced by the first primary coil at the output of the receiver circuit, a unique identification code, a manufacturer code, a charge algorithm profile, and a power requirement. E.g., WPC 1.2.4 Standard, Parts 1 and 2, Interface Definitions, pages 93, 100 and 98.

5.2.3.1 Signal Strength Packet (0x01)

Table 27 defines the format of the message contained in a Signal Strength Packet.

Table 27. Signal strength

	b_7	b_6	b_5	b_4	b_3	b_2	b_1	b_0
B_0	Signal Strength Value							

Signal Strength Value. The unsigned integer value in this field indicates the degree of coupling between the Primary Cell and Secondary Coil, with the purpose to enable Power Transmitters that use Free Positioning to determine the Primary Cell that provides optimum power transfer (see also Annex B, *Power Receiver Localization (Informative)*). To determine the degree of coupling, the Power Receiver shall monitor the value of a suitable variable during a Digital Ping. Examples of such variables are:

- The rectified voltage.
- The open circuit voltage (as measured at the output disconnect switch).
- The received Power (if the rectified voltage is actively or passively clamped during a Digital Ping).

The variable that is chosen shall result in a Signal Strength Value that increases monotonically with an increasing degree of coupling. The Signal Strength Value is reported as

$$\text{Signal Strength Value} = \frac{U}{U_{max}} \cdot 256,$$

where U is the monitored variable and U_{max} is the maximum value that the Power Receiver expects during a Digital Ping.

NOTE The Power Receiver shall set the Signal Strength Value to 255 in the case that $U \geq U_{max}$.

5.2.3.8 Identification Packet (0x71)

Table 35 defines the format of the message contained in an Identification Packet.

Table 35. Identification

	b_7	b_6	b_5	b_4	b_3	b_2	b_1	b_0
B_0	Major Version				Minor Version			
B_1	(MSB)	Manufacturer Code						
B_2								(LSB)
B_3	Ext	(MSB)	Basic Device Identifier					
⋮								
B_6								(LSB)

Major Version. The combination of this field and the Minor Version field identifies to which revision of this Specification the Power Receiver complies. The Major Version field shall contain the binary coded digit value 0x1.

Minor Version. The combination of this field and the Major Version field identifies to which minor revision of this Specification the Power Receiver complies. The Minor Version field shall be set according to the power profile of the Power Receiver.

Table 36. Minor Version field settings

PRx Power Profile	Minor Version Setting	Neg Bit
Baseline Power Profile	0x1 or 0x2	ZERO
Extended Power Profile	0x2	ONE

Manufacturer Code. The bit string contained in this field identifies the manufacturer of the Power Receiver, as specified in the Power Receiver Manufacturer Codes, Wireless Power Consortium.

5.2.3.7 Configuration Packet (0x51)

Table 34 defines the format of the message contained in a Configuration Packet.

Table 34. Message in a Configuration Packet

	b_7	b_6	b_5	b_4	b_3	b_2	b_1	b_0
B_0	Power Class		Maximum Power Value					
B_1	Reserved							
B_2	Prop	Reserved			ZERO	Count		
B_3	Window Size					Window Offset		
B_4	Neg	Polarity*	Depth*		Reserved			

* In the Baseline Power Profile, these bits are Reserved.

Power Class This field shall be set to '00'.

Maximum Power Value

(Baseline Power Profile) Apart from a scaling factor, the unsigned integer value contained in this field indicates the maximum amount of power that the Power Receiver expects to provide at the output of the rectifier. This maximum amount of power is calculated as follows:

$$P_{max} = \left(\frac{\text{Maximum Power Value}}{2}\right) \times 10^{\text{Power Class}}\ \text{W}.$$

185. To be compatible with the WPC Standard, the S22 Ultra in the Wireless PowerShare mode performs closed loop feedback control as specified by this part of the claim, adjusting its operating frequency and/or duty cycle. E.g., WPC 1.2.4 Standard, Parts 1 and 2, Interface Definitions, page 47.

The Power Transmitter uses the Control Error Value and the actual Primary Cell current to determine a new Primary Cell current. After the system stabilizes from the communications of the Control Error Packet, the Power Transmitter has a short time window to control its actual Primary Cell current towards the new Primary Cell current. Within this window, the Power Transmitter reaches a new Operating Point: the amplitude, frequency, and duty cycle of the AC voltage that is applied to the Primary Cell. Subsequently, the Power Transmitter keeps its Operating Point fixed in order to enable the Power Receiver to communicate additional control and status information. For details, see Section 5.1.2.6.1, *Power transfer control*.

Figure 17. Power transfer control loop

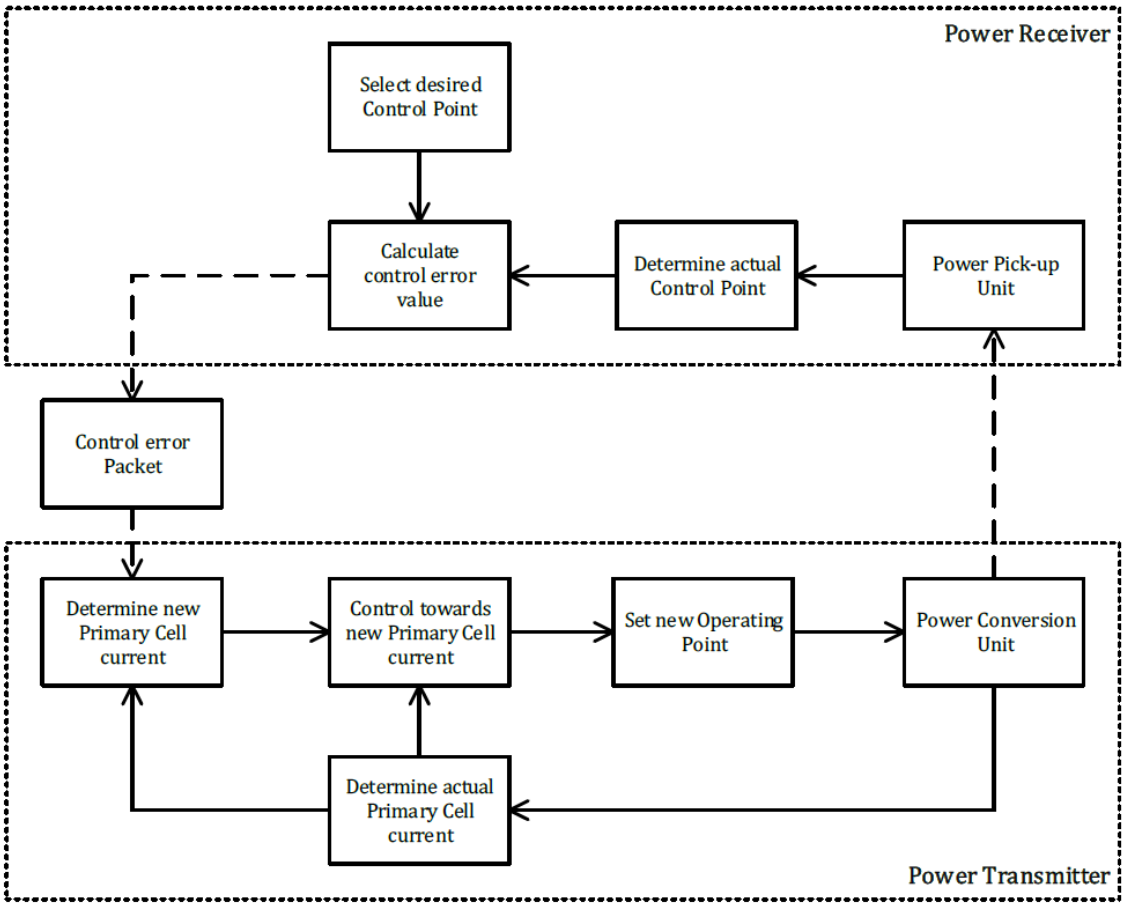

186. That the S22 Ultra in the Wireless PowerShare mode performs closed loop feedback control by adjusting its operating frequency and/or duty cycle is reflected in the representative P9415-R ASIC datasheet.

RENESAS P9415-R Datasheet

8.4.3 Demodulator

In TRx Mode, the Rx sends WPC protocol packets to the P9415-R. Using the demodulation (DEMOD) filter shown in Figure 22 and the internal demodulator circuitry, the P9415-R decodes the ASK modulation packets Rx sent. Based on the packet information, the P9415-R modulates the transmitted power by adjusting the operating frequency or duty cycle and detects a foreign object between Tx and Rx.

187. Further to be compatible with the WPC Standard, the S22 Ultra in the Wireless PowerShare mode monitors for the continued presence of the device being wirelessly charged, monitors the status of the wireless charging, and stops the wireless charging if the device is no longer present or the charging is complete. E.g., WPC 1.2.4 Standard, Parts 1 and 2, Interface Definitions, pages 82, 46, and 66.

- The first Control Error Packet shall start within the time window $t_{interval}$ after the start of the Configuration Packet. A next Control Error Packet shall start within the time window $t_{interval}$ after the start of the preceding Control Error Packet. As an additional constraint, the average of the time $t_{interval}$ between consecutive Control Error Packets shall be at most 260 ms.

  At any time, a user can remove a Mobile Device that is receiving power. The Power Transmitter can recognize such an event from a time-out in the communications from the Power Receiver, or from a violation of the Power Transfer Contract. As a result, the Power Transmitter aborts the power transfer and the system reverts to the *selection* phase.

- If the Power Transmitter receives an End Power Transfer Packet, the Power Transmitter shall remove the Power Signal within $t_{terminate}$ after the end of the End Power Transfer Packet. See Figure 24(d).

188. That the S22 Ultra meets this part of the claim is also indicated by the WPC Standard Reference Designs. E.g., WPC 1.2.4 Standard, Part 4, Reference Designs, page 31 (set forth above with respect to "communication interface" part of '208 claim 1).

189. '371 claim 20 begins, "A portable device comprising." As a non-limiting example, the S22 Ultra fits this description, as it is a portable device.

https://www.samsung.com/us/smartphones/galaxy-s22-ultra/buy/galaxy-s22-ultra-128gb-unlocked-sm-s908uzkaxaa/

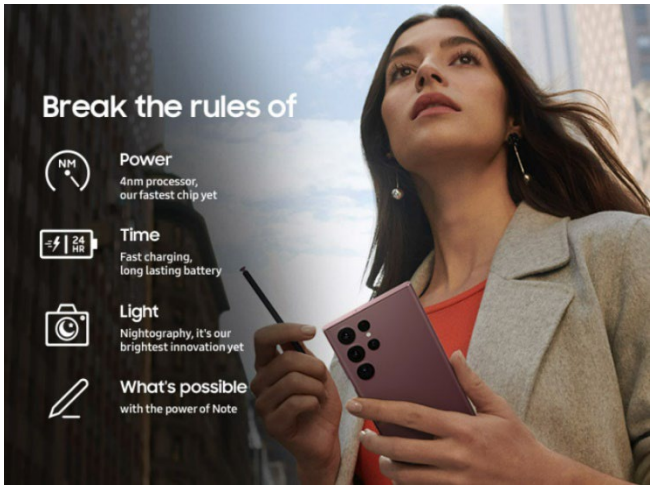

190. ’371 claim 20 further recites “a battery.” As a non-limiting example, the S22 Ultra meets this part of the claim, as it includes a battery. https://www.ifixit.com/News/57567/galaxy-s22-teardowns-apple-is-making-samsung-sweat

191. ’371 claim 20 further recites “a receiver unit, coupled to the battery, configured to receive inductive power from an inductive charging system including a base unit with a primary coil and associated circuit, the receiver unit comprising: a receiver coil which has a substantially planar shape and is located parallel to a surface of the portable device so that an alternating

magnetic field, when received through the surface of the portable device from the primary coil in the base unit in a direction substantially perpendicular to the plane of the receiver coil, inductively generates a current in the receiver coil to provide power inductively to the portable device when the portable device is placed on the base unit for charging the battery of the portable device; a ferromagnetic layer placed under the receiver coil on a side of the receiver coil away from the surface of the portable device; and a receiver circuit powered by the inductive charging system, wherein the receiver circuit comprises: a receiver rectifier circuit including a rectifier and a capacitor; a receiver communication and control circuit including a microcontroller to modulate the current in the receiver coil to communicate with the base unit while the receiver circuit is being powered by the inductive charging system; a voltage regulator coupled to an output of the receiver rectifier circuit and coupled to the microcontroller to provide a regulated voltage to power the microcontroller from the received inductive power; and a battery charging circuit to charge the battery, wherein the battery charging circuit is coupled to the output of the receiver rectifier circuit and coupled to the battery and begins drawing current only when the output of the receiver rectifier circuit reaches a set minimum voltage value; wherein when a current is generated in the receiver coil inductively by the primary coil in the base unit, the current is rectified and smoothed by the receiver rectifier circuit and is used by the voltage regulator to power and activate the microcontroller and used by the battery charging circuit to charge the battery of the portable device." As a non-limiting example, the S22 Ultra meets this part of the claim, as it includes a receiver unit as recited by this part of the claim. For example, the S22 Ultra includes components that together constitute at least a part of the receiver unit specified by this part of the claim, including a receiver coil, a ferromagnetic layer, and a receiver circuit, as illustrated below.

192. A receiver coil for receiving wireless power is included in the S22 Ultra, as specified by this part of the claim, as seen above with respect to the "first primary coil" part of

’371 claim 1, showing a planar wireless charging coil parallel to the back surface of the S22 Ultra for receiving a perpendicular magnetic field.

193. A ferromagnetic layer is positioned on the inner surface of the coil, as specified by this part of the claim; namely, the inner surface of the coil (within the grey side facing the inside of the smartphone) as shown below.

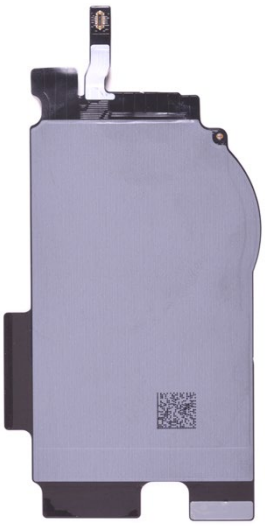

194. A receiver circuit is included in the S22 Ultra, as specified by this part of the claim. The receiver circuit is powered through the receiver coil and includes the components recited by this part of the claim, including a receiver rectifier circuit including a rectifier and a capacitor, a receiver communication and control circuit including a microcontroller, a voltage regulator to power the microcontroller from the received inductive power, and a battery charging circuit, which are structured and powered as specified by this part of the claim.

195. A receiver rectifier circuit including a rectifier and a capacitor is included in the S22 Ultra.

196. For example, the S22 Ultra includes a wireless power transceiver ASIC (e.g., the Renesas P9320S) with an internal rectifier and an accompanying external capacitor as shown below.

197. As shown in the representative Renesas P9415-R ASIC datasheet, the ASIC includes an internal rectifier and an accompanying external capacitor for receiving wireless power. In particular, the Renesas ASIC forms a rectifier (by way of a synchronous rectifier circuit shown in the green box below) which rectifies the AC voltage/current induced by the base unit at the AC1 and AC2 inputs (blue boxes; connected to the receiver coil) when the Renesas ASIC is in the receiver mode. This rectified voltage/current is smoothed by the external capacitor C_{VRCT} (red box) connected to the VRECT pin (orange boxes).

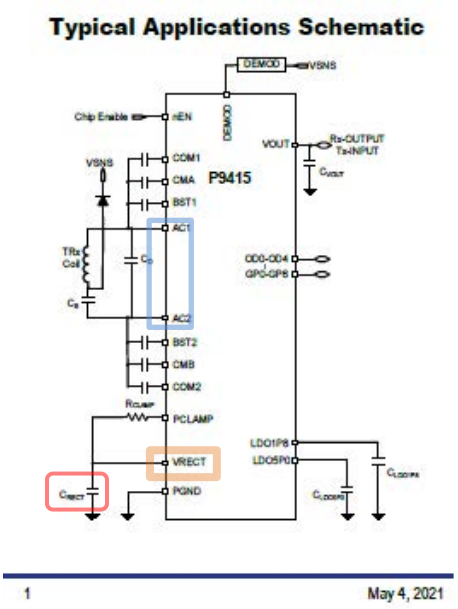

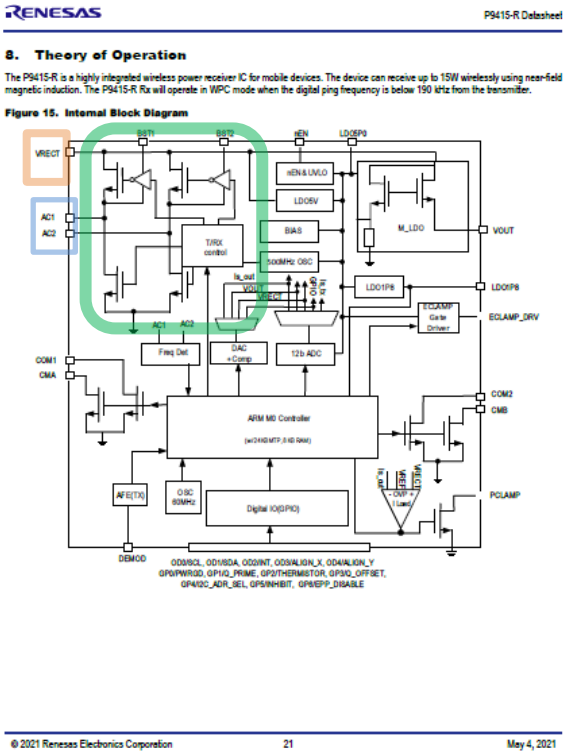

8.3 Rx Mode Functions

8.3.1 Synchronous Rectifier

The efficiency of the full-bridge rectifier in the P9415-R is increased by implementing it as a synchronous rectifier. The rectifier comprises four internally-driven switches that work in a full synchronous mode of operation when the load applied to VOUT is higher than the programmed threshold value. Below that threshold, the rectifier works in half-synchronous rectification mode. In half-synchronous rectification mode, only the low-side N-MOSFETs are driven and the high-side N-MOSFETs are forced into diode mode. At power-up, when the voltage is below the UVLO threshold, the rectifier works by using the body diodes associated with the NMOS transistors. The BST capacitors are used to provide power to drive the gates of high-side NMOS switches.

9.4 Input Capacitor (VRECT Capacitors)

The LDO input capacitors (VRECT capacitors) should be located as close as possible to the VRECT pins and ground (PGND). Ceramic capacitors are recommended for their low ESR and small profile.

198. That the S22 Ultra includes a receiver rectifier circuit including a rectifier and a capacitor is further reflected by the WPC Standard with which the S22 Ultra is compatible.

199. The following shows that the S22 Ultra is interoperable with the WPC Standard as a receiver. In particular, the S22 Ultra is certified as a WPC Baseline Power Profile (BPP or ≤ 5 W) receiver.

https://www.wirelesspowerconsortium.com/products/12711

SAMSUNG ELECTRONICS GALAXY S22 ULTRA (SM-S908U)

BRAND
Samsung Electronics

PRODUCT NAME
Galaxy S22 Ultra

MANUFACTURER PART NUMBER
SM-S908U

PRODUCT TYPE
Power Class 0 Receiver

REGISTRATION DATE
February 9, 2022

ADDITIONAL DETAILS

Qi Registration id	12184
Version	1.2.4
Currently licensed	Yes
Power profile	Basic Power Profile
Maximum received power	4.4 watts

200. The WPC Standard shows a receiver rectifier circuit (orange box) with a rectifier and capacitor (green box), as specified by this part of the claim. E.g., WPC 1.2.4 Standard, Parts 1 and 2, Interface Definitions, pages 23-24, 42, and 136.

3 Power interface

3.1 Power Receiver design requirements (PRx)

Figure 4 illustrates an example of a functional block diagram for a Baseline Power Profile Power Receiver.

Figure 4. Functional block diagram for a Baseline Power Profile Power Receiver

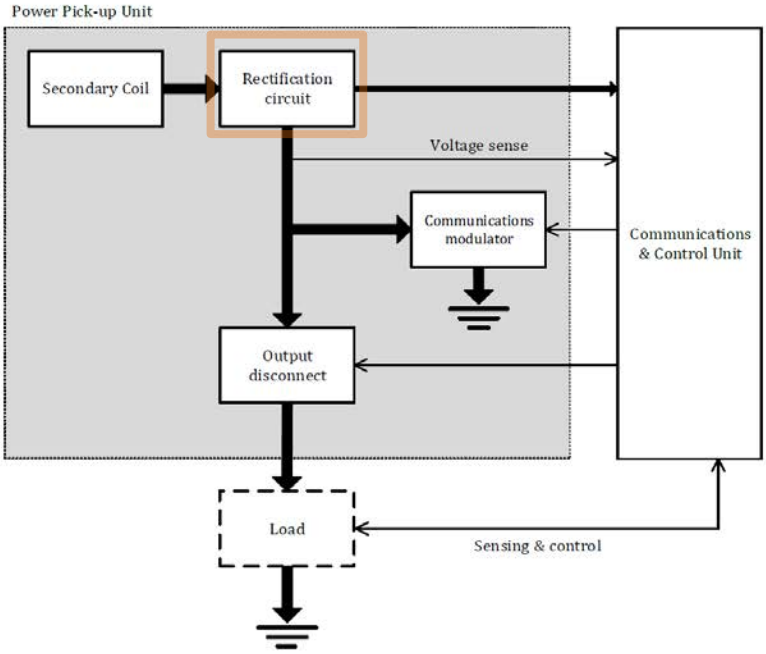

- A rectification circuit that provides full-wave rectification of the AC waveform using, for example, four diodes in a full-bridge configuration or a suitable configuration of active components (see Section 3.1.2, *Rectification circuit*). The rectification circuit may perform output smoothing as well. In this example, the rectification circuit provides power to both the Communications and Control Unit of the Power Receiver and the output of the Power Receiver

All practical Power Receiver implementations use a rectifier as part of the load circuit shown in Figure 10 (see also Section 3.1.2). Moreover, most Power Receiver implementations include a capacitor directly after this rectifier to smoothen the ripple on the rectified voltage. In combination with a high load

Figure 47. Power losses illustrated

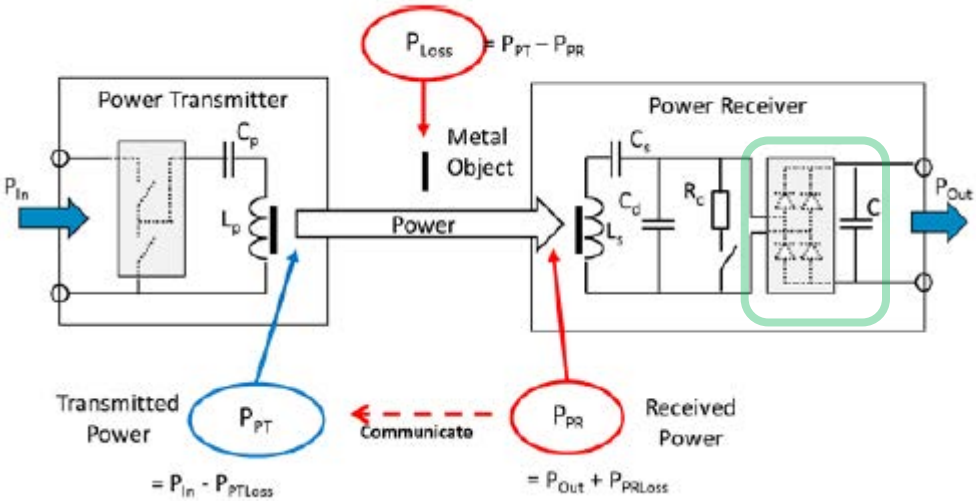

201. A receiver communication and control circuit including a microcontroller, as specified by this part of the claim, is also included in the S22 Ultra.

202. As shown below, the representative Renesas P9415-R ASIC includes a communication and control circuit including a microcontroller (green box shown below) as specified by this part of the claim. The microcontroller is powered by inductive power received from the base unit, as described below. The microcontroller communicates with the base unit with communication FETs (red boxes) for modulating the current in the receiver coil, using external capacitors at pins COM1 and CMA and COM2 and CMB (blue boxes). The FETs communicate by modulating the impedance at the receiver coil by connecting and disconnecting the external capacitors shown in the blue boxes.

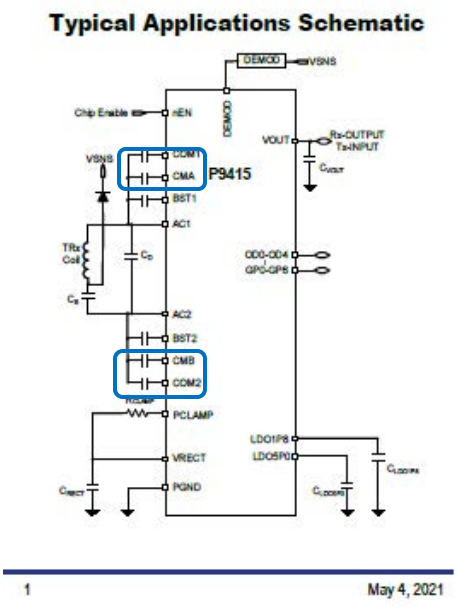

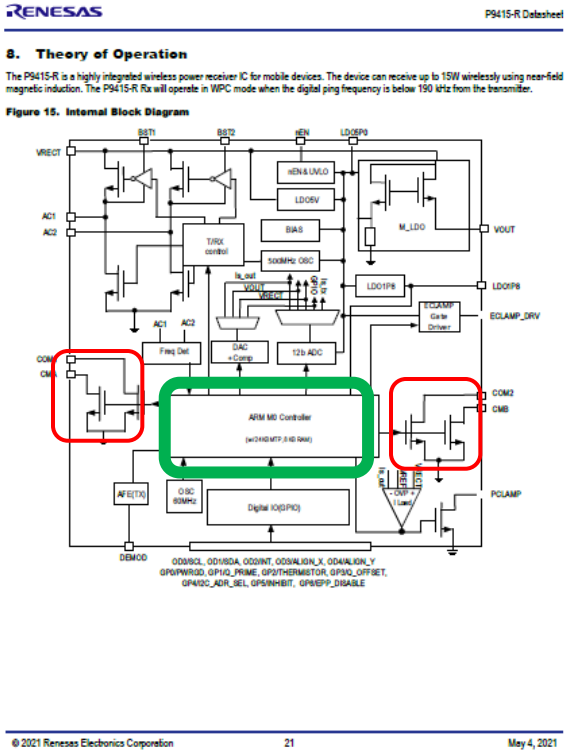

203. That the S22 Ultra includes a receiver communication and control circuit as specified by this part of the claim is further reflected by the WPC Standard with which the S22 Ultra is interoperable. E.g., WPC 1.2.4 Standard, Parts 1 and 2, Interface Definitions, page 23.

3 Power interface

3.1 Power Receiver design requirements (PRx)

Figure 4 illustrates an example of a functional block diagram for a Baseline Power Profile Power Receiver.

Figure 4. Functional block diagram for a Baseline Power Profile Power Receiver

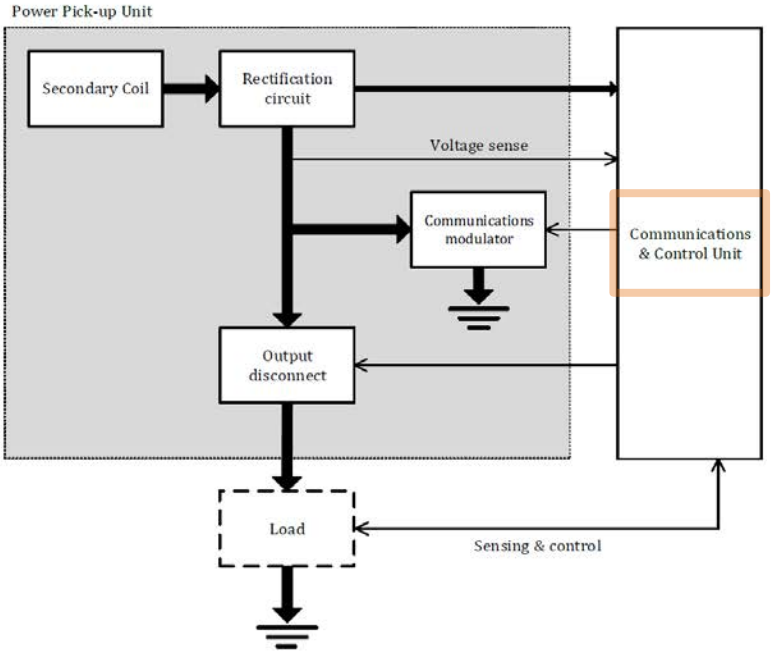

204. A voltage regulator is also included in the S22 Ultra to power the microcontroller in the wireless power transceiver ASIC from the received inductive power, as specified by this part of the claim.

205. As shown below, the representative Renesas P9415-R ASIC includes two Low Drop Out (LDO) regulators, LDO5V and LDO1P8 (red boxed below), at least one of which provides power to the microcontroller (green). These LDOs are powered by VRECT (orange), which is the rectified DC voltage/current generated in the ASIC by the inductive charging system.

8. Theory of Operation

The P9415-R is a highly integrated wireless power receiver IC for mobile devices. The device can receive up to 15W wirelessly using near-field magnetic induction. The P9415-R Rx will operate in WPC mode when the digital ping frequency is below 190 kHz from the transmitter.

Figure 15. Internal Block Diagram

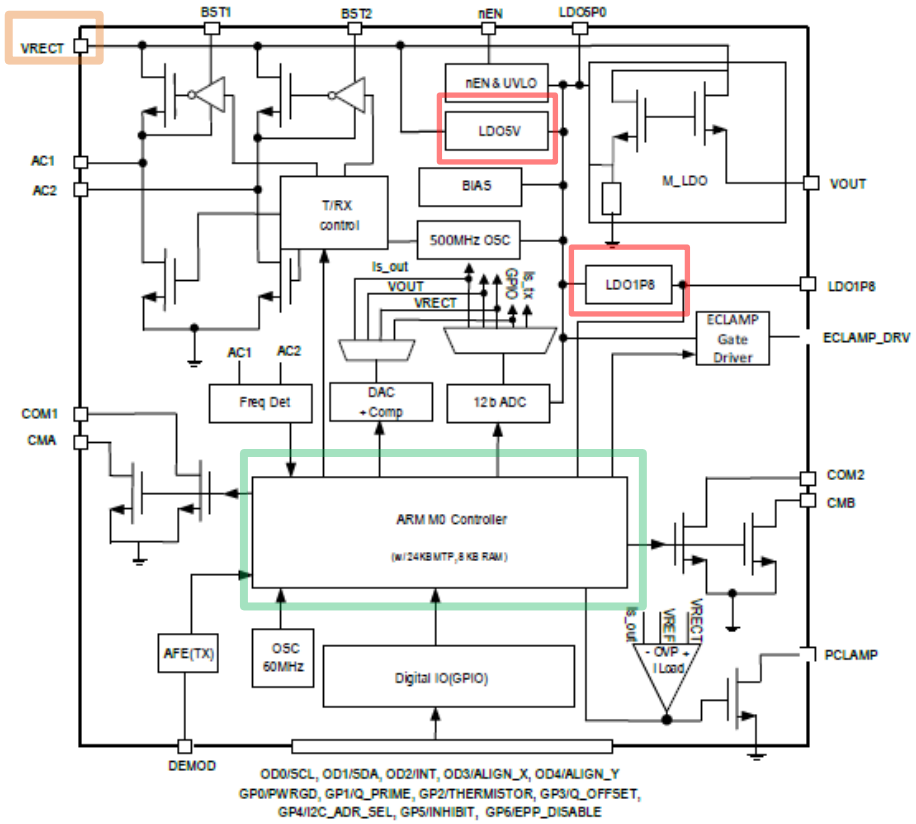

Typical Applications Schematic

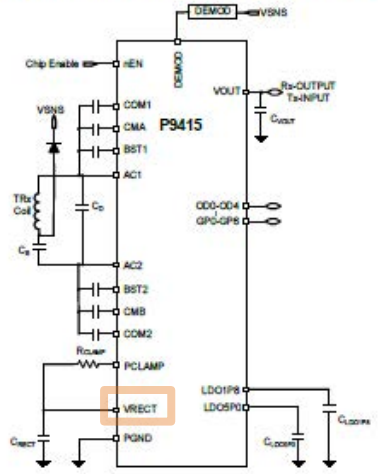

8.3.6 LDO Regulators

The P9415-R has three LDOs. The Main LDO (VOUT pin) is programmable from 5V to 20V and LDO5P0 is powered by VRECT. LDO1P8 is powered by LDO5P0. Both LDO5P0 and LDO1P8 are used for supplying power to internal low voltage blocks. The LDOs must have local ceramic bypass capacitors placed near the P9415-R.

8.2 WPC Mode Characteristics

8.2.1 Startup

When a mobile device containing the P9415-R is placed on a WPC "Qi" charging pad, it responds to the transmitter's "ping" signal by rectifying the AC power from the transmitter and storing it on a capacitor connected to VRECT. During the "Ping" phase, once the rectifier voltage at the VRECT pin goes above the UVLO threshold, the digital section of the P9415-R enables communication. The control loop of the P9415-R adjusts the rectifier voltage by sending error packets to the transmitter before and after it enables the VOUT LDO.

206. A battery charging circuit is also included in the S22 Ultra, as specified by this part of the claim.

207. As shown below, the representative Renesas P9415-R ASIC includes a Main Low Drop Out regulator (MLDO) (red box shown below) that meets this part of the claim. The MLDO regulator is powered by the rectified inductive power received at the VRECT pin. The MLDO regulator provides output power at the VOUT pin for charging the battery.

RENESAS P9415-R Datasheet

8. Theory of Operation

The P9415-R is a highly integrated wireless power receiver IC for mobile devices. The device can receive up to 15W wirelessly using near-field magnetic induction. The P9415-R Rx will operate in WPC mode when the digital ping frequency is below 190 kHz from the transmitter.

Figure 15. Internal Block Diagram

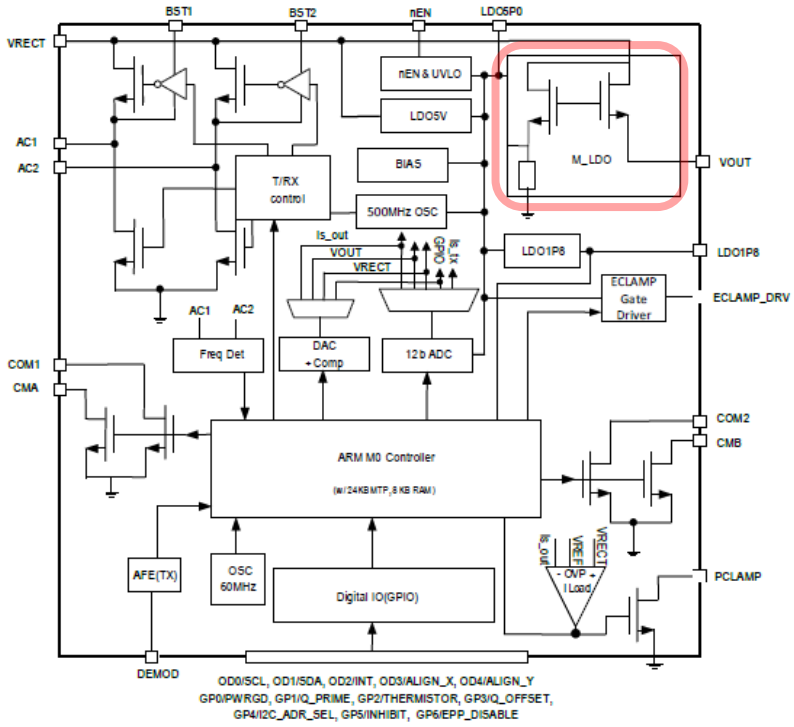

208. The MLDO regulator enables an output at the VOUT pin once VRECT reaches a set minimum voltage value, as described below, as seen in the text and oscilloscope image in the P9415-R ASIC datasheet. For example, in the oscilloscope image, the ASIC output VOUT (blue trace) is enabled when the VRECT voltage (yellow trace) reaches a set minimum voltage value.

8.2 WPC Mode Characteristics

8.2.1 Startup

When a mobile device containing the P9415-R is placed on a WPC "Qi" charging pad, it responds to the transmitter's "ping" signal by rectifying the AC power from the transmitter and storing it on a capacitor connected to VRECT. During the "Ping" phase, once the rectifier voltage at the VRECT pin goes above the UVLO threshold, the digital section of the P9415-R enables communication. The control loop of the P9415-R adjusts the rectifier voltage by sending error packets to the transmitter before and after it enables the VOUT LDO.

The VOUT LDO is enabled when the power transfer mode is initiated and the voltage at VRECT, the output of the full-wave synchronous rectifier reaches the target voltage that includes headroom in addition to the LDO VOUT target voltage. For example, if the VOUT voltage target is 12V, the target VRECT voltage is VOUT + headroom, where the headroom is a function of the output current.

Figure 8. Initial Startup Waveform

209. In addition, the S22 Ultra may also include a PMIC between the VOUT pin of the wireless power transceiver ASIC and the battery, further controlling and regulating power for charging the battery as specified by this part of the claim.

210. ’371 claim 20 further recites “wherein upon powering and activation of the receiver circuit by the primary coil in the base unit, the receiver circuit is configured to: communicate to the base unit information corresponding to a voltage or current value at the output of the receiver rectifier circuit induced by the primary coil, a unique identifier code, a manufacturer code, a charge algorithm profile, and a power requirement; and periodically communicate to the base unit additional information corresponding to a presently induced output voltage or current of the receiver rectifier circuit to enable the base unit to regulate in a closed loop manner the output voltage or current of the receiver rectifier circuit during the charging of the portable device.” As a non-limiting example, the S22 Ultra meets this part of the claim, as it communicates with a base unit, by way of current modulation through its charging coil, the initial and periodic information specified by this part of the claim, per the WPC Standard, so that the base unit can charge the battery of the smartphone.

211. The initial voltage/current information specified by this part of the claim is communicated by the S22 Ultra, per the WPC Standard. E.g., WPC 1.2.4 Standard, Parts 1 and 2, Interface Definitions, pages 74 and 93.

5.1.3.2 Ping phase (PRx perspective)

If the Power Receiver responds to the Digital Ping, the Power Receiver shall transmit either a Signal Strength Packet or an End Power Transfer Packet as its first Packet. The Power Receiver shall transmit this first Packet immediately upon entering the *ping* phase.

Figure 28. Power Receiver timing in the ping phase

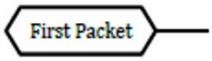

After the Power Receiver has transmitted a Signal Strength Packet, the Power Receiver shall proceed to the *identification & configuration* phase. After the Power Receiver has transmitted an End Power Transfer Packet, it shall remain in the *ping* phase. In that case, the Power Receiver should transmit additional End Power Transfer Packets.[6]

5.2.3.1 Signal Strength Packet (0x01)

Table 27 defines the format of the message contained in a Signal Strength Packet.

Table 27. Signal strength

	b_7	b_6	b_5	b_4	b_3	b_2	b_1	b_0
B_0	Signal Strength Value							

Signal Strength Value. The unsigned integer value in this field indicates the degree of coupling between the Primary Cell and Secondary Coil, with the purpose to enable Power Transmitters that use Free Positioning to determine the Primary Cell that provides optimum power transfer (see also Annex B, *Power Receiver Localization (Informative)*). To determine the degree of coupling, the Power Receiver shall monitor the value of a suitable variable during a Digital Ping. Examples of such variables are:

- The rectified voltage.
- The open circuit voltage (as measured at the output disconnect switch).
- The received Power (if the rectified voltage is actively or passively clamped during a Digital Ping).

The variable that is chosen shall result in a Signal Strength Value that increases monotonically with an increasing degree of coupling. The Signal Strength Value is reported as

$$\text{Signal Strength Value} = \frac{U}{U_{max}} \cdot 256,$$

where U is the monitored variable and U_{max} is the maximum value that the Power Receiver expects during a Digital Ping.

NOTE The Power Receiver shall set the Signal Strength Value to 255 in the case that $U \geq U_{max}$.

212. The initial identification/configuration information specified by this part of the claim is also communicated by the S22 Ultra, per the WPC Standard, so that the S22 Ultra identifies itself and provides information so that the base unit can configure the wireless power transfer to the S22 Ultra. E.g., WPC 1.2.4 Standard, Parts 1 and 2, Interface Definitions, pages 71 and 74.

- ***Identification & configuration* phase. Section 5.1.3.3 defines the Response of a Power Receiver to an extended Digital Ping. In this phase, the Power Receiver identifies itself and provides information for a default Power Transfer Contract.**

5.1.3.3 Identification & configuration phase (PRx perspective)

In the *identification & configuration* phase, the Power Receiver shall transmit the following sequence of Packets:

- If the Power Receiver enters the *identification & configuration* phase from the *ping* phase, an Identification Packet.

213. The initial identification/configuration information sent by the S22 Ultra includes a unique identifier. E.g., WPC 1.2.4 Standard, Parts 1 and 2, Interface Definitions, page 101.

Basic Device Identifier. The bit string contained in this field contributes to the identification of the Power Receiver. A Power Receiver manufacturer should ensure that the combination of Basic Device Identifier and Manufacturer ID is sufficiently unique. Embedding a serial number of at least 20 bits in the Basic Device Identifier is sufficient. Alternatively, using a (pseudo) random number generator to dynamically generate part of the Basic Device Identifier is sufficient as well, provided that the generated part complies with the following requirements.

214. The initial identification/configuration information sent by the S22 Ultra also includes a manufacturer code and a charge algorithm profile (e.g., a WPC version). E.g., WPC 1.2.4 Standard, Parts 1 and 2, Interface Definitions, page 100.

5.2.3.8 Identification Packet (0x71)

Table 35 defines the format of the message contained in an Identification Packet.

Table 35. Identification

	b_7	b_6	b_5	b_4	b_3	b_2	b_1	b_0
B_0	Major Version				Minor Version			
B_1	(MSB)	Manufacturer Code						
B_2								(LSB)
B_3	Ext	(MSB)	Basic Device Identifier					
⋮								
B_6								(LSB)

Major Version. The combination of this field and the Minor Version field identifies to which revision of this Specification the Power Receiver complies. The Major Version field shall contain the binary coded digit value 0x1.

Minor Version. The combination of this field and the Major Version field identifies to which minor revision of this Specification the Power Receiver complies. The Minor Version field shall be set according to the power profile of the Power Receiver.

Table 36. Minor Version field settings

PRx Power Profile	Minor Version Setting	Neg Bit
Baseline Power Profile	0x1 or 0x2	ZERO
Extended Power Profile	0x2	ONE

Manufacturer Code. The bit string contained in this field identifies the manufacturer of the Power Receiver, as specified in the Power Receiver Manufacturer Codes, Wireless Power Consortium.

215. The initial identification/configuration information sent by the S22 Ultra also includes a power requirement. E.g., WPC 1.2.4 Standard, Parts 1 and 2, Interface Definitions, page 98.

5.2.3.7 Configuration Packet (0x51)

Table 34 defines the format of the message contained in a Configuration Packet.

Table 34. Message in a Configuration Packet

	b_7	b_6	b_5	b_4	b_3	b_2	b_1	b_0
B_0	Power Class		Maximum Power Value					
B_1	Reserved							
B_2	Prop	Reserved			ZERO	Count		
B_3	Window Size					Window Offset		
B_4	Neg	Polarity*	Depth*		Reserved			

* In the Baseline Power Profile, these bits are Reserved.

Power Class This field shall be set to '00'.

Maximum Power Value

(Baseline Power Profile) Apart from a scaling factor, the unsigned integer value contained in this field indicates the maximum amount of power that the Power Receiver expects to provide at the output of the rectifier. This maximum amount of power is calculated as follows:

$$P_{max} = \left(\frac{\text{Maximum Power Value}}{2}\right) \times 10^{\text{Power Class}}\ \text{W}.$$

216. That the S22 Ultra communicates the initial identification/configuration information specified by this part of the claim is also reflected in the representative Renesas P9415-R ASIC datasheet.

8.2.10 Identification and Configuration (ID and Config)

In this phase, the P9415-R sends or expects the following packets:

- Identification Packet
- Configuration Packet

After the transmission of the Configuration Packet, the P9415-R proceeds to the Negotiation phase.

217. Also, additional information is periodically communicated by the S22 Ultra as specified by this part of the claim, per the WPC Standard. Per the WPC Standard, the base unit uses this information communicated by the S22 Ultra to configure and control charging of the S22 Ultra battery in a closed loop feedback manner. E.g., WPC 1.2.4 Standard, Parts 1 and 2, Interface Definitions, page 46.

> Throughout the *power transfer* phase, the Power Transmitter and Power Receiver control the amount of power that is transferred. Figure 17 illustrates a schematic diagram of the power transfer control loop, which basically operates as follows: the Power Receiver selects a desired Control Point: a desired output current and/or voltage, a temperature measured somewhere in the Mobile Device, etc. In addition, the Power Receiver determines its actual Control Point. The Power Receiver may use any approach to determine a Control Point. Moreover, the Power Receiver may change this approach at any time during the *power transfer* phase. Using the desired Control Point and actual Control Point, the Power Receiver calculates a Control Error Value—for example, by simply taking the (relative) difference of the two output voltages or currents. The result is negative if the Power Receiver requires less power in order to reach its desired Control Point and positive if the Power Receiver requires more power in order to reach its desired Control Point. Subsequently, the Power Receiver transmits this Control Error Value to the Power Transmitter.
>
> Wireless Power Consortium
>
> 46

218. That the S22 Ultra communicates the additional information specified by this part of the claim for closed loop feedback control is also reflected in the representative Renesas P9415-R ASIC datasheet.

RENESAS P9415-R Datasheet

6. Wireless Power Charging System

A wireless power charging system has a base station with one or more transmitters that make power available via DC-to-AC inverter(s), and transmit the power over a strongly-coupled inductor pair (magnetic induction) or over a loosely-coupled inductor pair (magnetic resonance) to a receiver in a mobile device. A WPC[1] system uses near field magnetic induction between coils and can be a free-positioning or magnetically-guided type of system.

In WPC systems, the amount of power transferred to the mobile device is controlled by the receiver. The receiver sends communication packets to the transmitter to increase power, decrease power, or maintain the power level. The bit rate for Rx-to-Tx communication link is 2kbps for WPC receivers and is amplitude modulated (ASK) on top of the power link that exists.

Figure 2. Block Diagram of WPC System

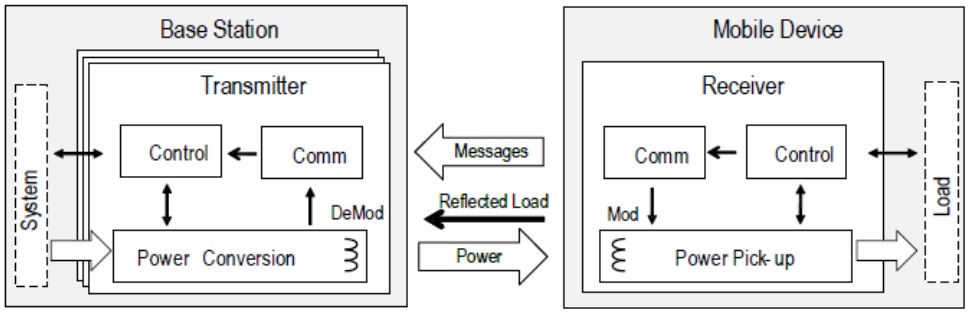

219. The above non-limiting examples illustrate Samsung's infringement of claims 1 and 20 of the '371 patent. Samsung infringes additional claims in the '371 patent, including for example claims 2-4, 6, 8-12, 15, 16, 21-23, and 28-30, with the specific infringement contentions to be presented in discovery per the Court's procedure.

COUNT FIVE: PATENT INFRINGEMENT OF THE '500 PATENT

220. Mojo Mobility incorporates by reference the preceding paragraphs as if fully stated herein.

221. Claims 1 and 23 of the '500 patent is reproduced below:

1. A system for inductive powering or charging of portable devices, the system comprising:

one or more primary coils that are substantially planar and parallel to a surface of the system for powering or charging one or more compatible portable devices including batteries and receiver units, each receiver unit including a receiver coil and a receiver circuit including a receiver rectifier circuit;

one or more drive circuits including one or more FET drivers, FET switches, and capacitors coupled to the one or more primary coils that when operated apply an alternating electrical current to the one or more primary coils to generate a magnetic field in a direction

substantially perpendicular to the plane of the one or more primary coils and the surface of the system to provide power to the one or more portable devices capable of being powered or charged by the system when present and near the one or more primary coils;

one or more sense circuits to monitor the current through the one or more primary coils to sense communications from the one or more receiver coils; and

one or more communication and control circuits including one or more microcontrollers coupled to the one or more drive circuits and the one or more sense circuits that detect communications through the one or more sense circuits via the one or more primary coils and control the one or more drive circuits to control the powering or charging of the one or more compatible portable devices;

wherein the one or more communication and control circuits:

operate the one or more drive circuits near a first resonant frequency of a circuit formed by a primary coil and a drive circuit and a receiver coil and a receiver circuit of a compatible portable device when nearby;

switch the one or more primary coils at a frequency and power level sufficient to transfer power to one or more of the receiver units when near the one or more primary coils for a sufficiently long period of time to activate the one or more receiver circuits and to receive a response from the one or more receiver circuits via the one or more receiver coils which the one or more primary coils sense via the one or more sense circuits as a modulation of one or more primary coil currents;

detect, through the one or more sense circuits, communications from the one or more receiver units through the one or more receiver coils including information corresponding to one or more voltages at one or more outputs of the one or more receiver rectifier circuits induced by the one or more primary coils and the one or more receiver coils and information associated with the one or more portable devices and/or receiver units to enable the one or more communication and control circuits to identify the one or more portable devices and/or receiver units and to determine any one or more appropriate charging or powering algorithm profiles therefor;

for each portable device, determine the primary coil electromagnetically most aligned with the receiver coil of the portable device;

drive the one or more FET switches associated with the most aligned one or more primary coils;

periodically receive information corresponding to one or more output voltages or currents of the one or more receiver rectifier circuits via the one or more primary coils and the one or more sense circuits; and

regulate in a closed loop feedback manner the one or more output voltages or currents of the one or more receiver rectifier circuits by adjusting the frequency or

duty cycle of the one or more drive circuits during the charging or powering of the one or more portable devices.

23. A portable device including a battery capable of receiving inductive power from an inductive charging system including a base unit with one or more primary coils and associated circuits, the portable device comprising:

a receiver coil which has a substantially planar shape and located parallel to a surface of the portable device so that a magnetic field received from a primary coil in a base unit of an inductive charging system in a direction substantially perpendicular to the plane of the receiver coil is used to inductively generate a current in the receiver coil to power or charge the portable device;

a ferrite material layer placed behind the receiver coil and opposite to the surface of the portable device to provide shielding in the portable device from electromagnetic fields;

a receiver circuit designed to operate near a resonant frequency of a circuit formed by the receiver coil, the receiver circuit, and a compatible base unit primary coil and associated circuit when adjacent to the portable device for inductive powering or charging;

wherein the receiver circuit is part of a receiver unit and comprises:

a receiver rectifier circuit including one or more rectifiers and one or more capacitors; and

a receiver communication and control circuit including a microcontroller and a communication FET to modulate the input impedance of the receiver circuit to communicate with the base unit through the primary coil;

wherein when a current is generated in the receiver coil inductively by the primary coil in the base unit, the current is rectified by the one or more rectifiers and smoothed by the one or more capacitors in the receiver rectifier circuit and is used to power and activate the receiver communication and control circuit and to power or charge the portable device; and

wherein upon powering and activation of the receiver circuit by a primary coil in the base unit, the receiver circuit:

communicates information corresponding to a voltage at an output of the receiver rectifier circuit and information associated with the portable device and/or receiver unit to enable the base unit to identify the portable device and/or receiver unit, to determine any appropriate charging or powering algorithm therefor, and to identify one or more primary coils of the base unit most aligned with the receiver coil for use in charging or powering the portable device; and

subsequently, periodically communicates information corresponding to an output voltage or current of the receiver rectifier circuit to the base unit to enable the base unit to regulate in a closed loop manner the output voltage

> or current of the receiver rectifier circuit during the charging or powering of the portable device.

222. Samsung accused products with one or more charging coils which can provide wireless power as specified by claim 1 infringe the claim. This includes Samsung smartphones and wireless chargers. Samsung accused products which can receive wireless power as specified by claim 23 infringe the claim. This includes Samsung smartphones, wearable products, and earbud products. Samsung accused products that infringe claim 1 and/or claim 23 of the ’500 patent (and/or any other claims in the patent) are herein collectively the “’500 accused products.” In the following, infringement of ’500 claims 1 and 23 by way of the Samsung S21 Ultra smartphone (“S21 Ultra”) is illustrated to provide a non-limiting example of Samsung’s infringement of the ’500 patent.

223. ’500 claim 1 begins, “A system for inductive powering or charging of portable devices, the system comprising.” As a non-limiting example, the S21 Ultra meets this part of the claim.

224. Samsung’s Galaxy smartphones with Wireless PowerShare can wirelessly charge various mobile devices with wireless power receivers.

225. The below excerpt from the Samsung website lists Samsung smartphone models that include Wireless PowerShare including various models of the S21 series, available at: https://www.samsung.com/us/support/answer/ANS00082564/.

Phones that can use and also be charged with Wireless PowerShare:

- Galaxy S22, S22+, and S22 Ultra
- Galaxy S21, S21+, and S21 Ultra
- Note20 5G and Note20 Ultra 5G
- Galaxy Note10, Note10+, and Note10+ 5G
- Galaxy Fold, Z Fold2, Z Fold3 and Z Fold4
- Galaxy Z Flip, Z Flip 5G, Z Flip3 and Z Flip4
- Galaxy S20 5G, S20+ 5G, S20 Ultra 5G, and S20 FE
- Galaxy S10e, S10, S10+, and S10 5G

226. The Verizon Wireless website also indicates that various S21 series smartphones, including the S21 Ultra, include the Wireless PowerShare feature, available at: https://www.verizon.com/support/knowledge-base-236183/.

Samsung Galaxy S21 5G / Galaxy S21 Ultra 5G - Use Wireless PowerShare

NOTE

- Wireless PowerShare works with most wireless charging capable devices. Different devices may charge at different speeds.
- If unable to connect a device or charging is slow, remove any cover from each device.
  → For additional troubleshooting, refer to Wireless PowerShare Issues.
- Using Wireless PowerShare may affect call reception or data services, depending on network environment.

1. Swipe down on the **Status bar** (at the top) twice to expand the 'quick settings' menu.
   → The image below is an example.

2. Tap **Wireless power sharing**.
   → If unavailable, swipe left to view additional quick settings.
3. Place the center of your phone back to back with another PowerShare-capable device.

227. '500 claim 1 further recites "one or more primary coils that are substantially planar and parallel to a surface of the system for powering or charging one or more compatible portable devices including batteries and receiver units, each receiver unit including a receiver coil and a receiver circuit including a receiver rectifier circuit." As a non-limiting example, the S21 Ultra meets this part of the claim.

228. The S21 Ultra includes a charging coil. See https://www.ifixit.com/Teardown/Samsung+Galaxy+S21+Teardown/140337 and https://www.ifixit.com/Teardown/Samsung+Galaxy+S21+Ultra+Teardown/141188.

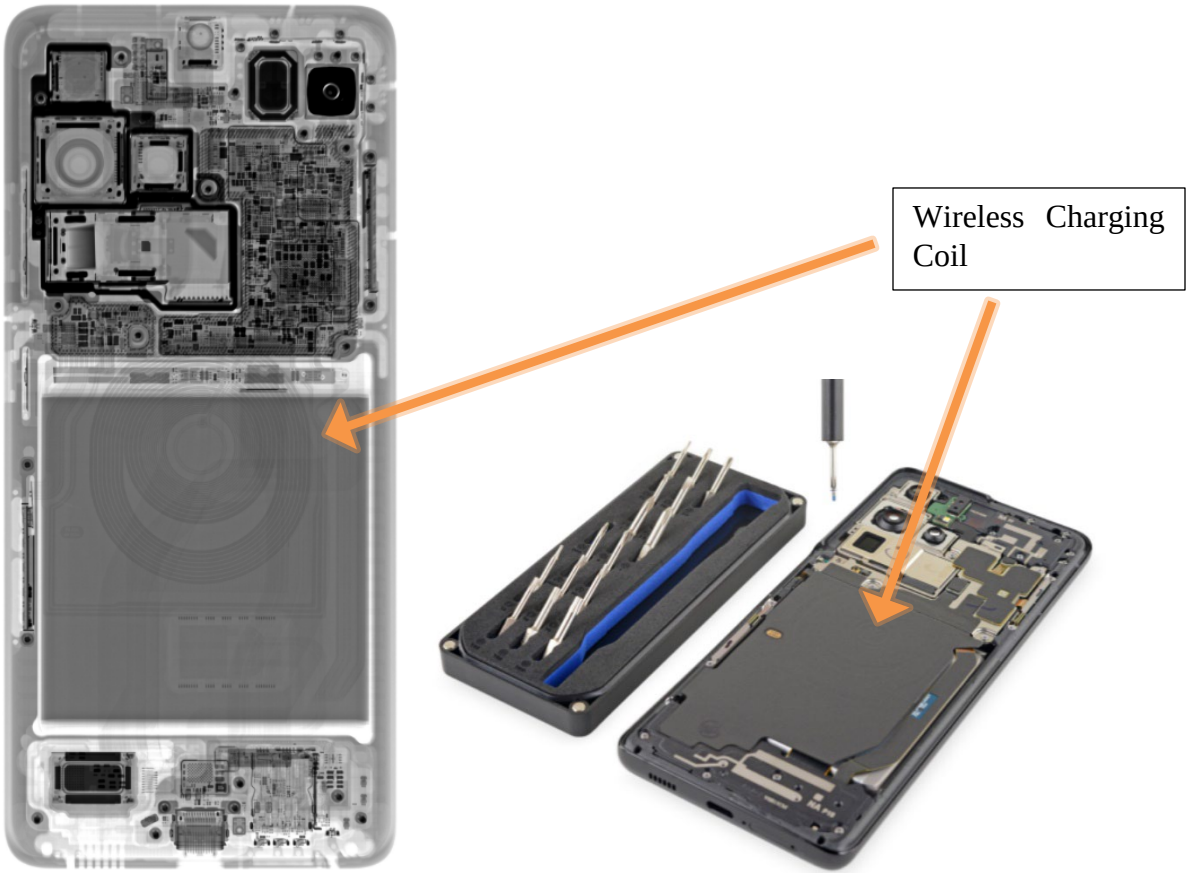

229. ’500 claim 1 further recites “one or more drive circuits including one or more FET drivers, FET switches, and capacitors coupled to the one or more primary coils that when operated apply an alternating electrical current to the one or more primary coils to generate a magnetic field in a direction substantially perpendicular to the plane of the one or more primary coils and the surface of the system to provide power to the one or more portable devices capable of being powered or charged by the system when present and near the one or more primary coils.” As a non-limiting example, the S21 Ultra meets this part of the claim.

230. The S21 Ultra includes a drive circuit including a FET driver, a FET switch, and a capacitor as recited by this part of the claim.

231. The internal components of the S21 Ultra are shown in the below component images from an ifixit.com teardown and show that the S21 Ultra includes wireless power transceiver ASIC (e.g., a Renesas P9320S IC), available at: https://www.ifixit.com/Teardown/Samsung+Galaxy+S21+Ultra+Teardown/141188. This is the same wireless power transceiver ASIC shown above with respect to the ’371 patent in relation to the S22 Ultra. Thus, the discussion above on the ’371 patent in relation to the S22 Ultra regarding its wireless power transceiver ASIC applies equally here on the ’500 patent in relation to the S21 Ultra.

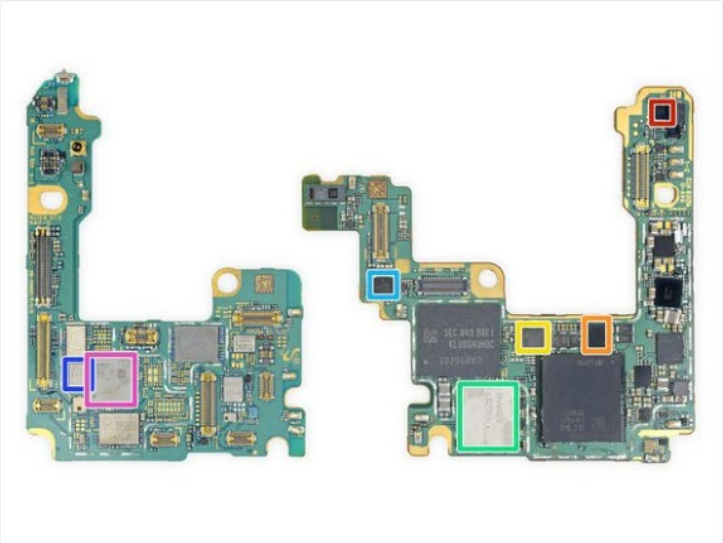

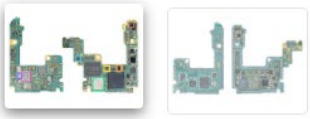

- IC identification, continued:
  - STMicroelectronics STM32G071K8T6 32-Bit ARM Cortex-M0 Microcontroller w/ 64 KB Flash
  - Renesas (formerly Integrated Device Technology) P9320S Wireless Power Receiver
  - NXP Semiconductor SN110T Secure Element
  - Samsung 0444D1 Bluetooth Module (likely)
  - ON Semiconductor NCP59744 3A LDO Regulator
  - Skyworks SKY77368-11 Power Amplifier Module
  - Broadcom (Formerly Avago) AFEM-9146 RF Front End Module (likely)

232. For example, the wireless power transceiver ASIC included in the S21 Ultra includes a drive circuit with an internal FET driver and FET switch and an accompanying external capacitor.

233. As a non-limiting example, the P9415-R ASIC—which on information and belief is representative of the wireless power transceiver ASIC included in the S21 Ultra with respect to the ’500 Patent—has a drive circuit with four FET switches (FETs) and associated FET drivers (the two triangles and the TX/RX control rectangle) coupled to external capacitors (red boxes), shown above with respect to the “first drive circuit” part of ’371 claim 1.

234. The magnetic field generated by the charging coil in the S21 Ultra is substantially perpendicular to the plane of the coil. E.g., WPC 1.2.4 Standard, Introduction, page 9 (shown above with respect to the “base unit” part of ’208 claim 1).

235. ’500 claim 1 further recites “one or more sense circuits to monitor the current through the one or more primary coils to sense communications from the one or more receiver coils.” As a non-limiting example, the S21 Ultra meets this part of the claim.

236. The S21 Ultra includes a sense circuit that senses communications through the charging coil, as recited by this part of the claim.

237. This is illustrated, for example, by the representative P9415-R ASIC which has an internal microcontroller coupled to the drive circuit (including internal FET drivers and FET switches and external capacitors) and the sense circuit (including the internal AFE and external DEMOD circuit), as shown above with respect to the “first sense circuit” part of ’371 claim 1.

238. ’500 claim 1 further recites “one or more communication and control circuits including one or more microcontrollers coupled to the one or more drive circuits and the one or more sense circuits that detect communications through the one or more sense circuits via the one or more primary coils and control the one or more drive circuits to control the powering or charging of the one or more compatible portable devices.” As a non-limiting example, the S21 Ultra meets this part of the claim as it includes a communication and control circuit including a microcontroller coupled to its drive circuit and sense circuit as specified by this part of the claim.

239. This is illustrated, for example, by the representative P9415-R ASIC which has an internal microcontroller coupled to the drive circuit (including internal FET drivers and FET switches and external capacitors) and the sense circuit (including the internal AFE and external DEMOD circuit), as shown above with respect to the "first drive circuit" and "first sense circuit" parts of '371 claim 1, with the shown representative ARM M0 Controller corresponding to the "microcontroller" specified in this part of the claim.

240. '500 claim 1 further recites "wherein the one or more communication and control circuits: operate the one or more drive circuits near a first resonant frequency of a circuit formed by a primary coil and a drive circuit and a receiver coil and a receiver circuit of a compatible portable device when nearby; switch the one or more primary coils at a frequency and power level sufficient to transfer power to one or more of the receiver units when near the one or more primary coils for a sufficiently long period of time to activate the one or more receiver circuits and to receive a response from the one or more receiver circuits via the one or more receiver coils which the one or more primary coils sense via the one or more sense circuits as a modulation of one or more primary coil currents; detect, through the one or more sense circuits, communications from the one or more receiver units through the one or more receiver coils including information corresponding to one or more voltages at one or more outputs of the one or more receiver rectifier circuits induced by the one or more primary coils and the one or more receiver coils and information associated with the one or more portable devices and/or receiver units to enable the one or more communication and control circuits to identify the one or more portable devices and/or receiver units and to determine any one or more appropriate charging or powering algorithm profiles therefor; for each portable device, determine the primary coil electromagnetically most aligned with the receiver coil of the portable device; drive the one or more FET switches associated with the most aligned one or more primary coils; periodically receive information corresponding

to one or more output voltages or currents of the one or more receiver rectifier circuits via the one or more primary coils and the one or more sense circuits; and regulate in a closed loop feedback manner the one or more output voltages or currents of the one or more receiver rectifier circuits by adjusting the frequency or duty cycle of the one or more drive circuits during the charging or powering of the one or more portable devices." As a non-limiting example, the S21 Ultra meets this part of the claim as its wireless power microcontroller is configured to operate as specified by this part of the claim.

241. Regarding the S21 Ultra, the communication and control aspects of this are illustrated, for example, with respect to the "communication and control circuit" part of '371 claim 1 as to the representative P9415-R ASIC datasheet and the WPC 1.2.4 Standard, which apply equally to the S21 Ultra as it is compliant with WPC 1.2.4 and uses the same Renesas P9320S ASIC (or equivalent) as the S22 Ultra. Similarly, the frequency aspects of this are illustrated, for example, with respect to the frequency aspects of the "first drive circuit" part of '371 claim 1.

242. '500 claim 23 begins, "A portable device including a battery capable of receiving inductive power from an inductive charging system including a base unit with one or more primary coils and associated circuits, the portable device comprising." As a non-limiting example, the S21 Ultra fits this description, as it includes a battery that can be wirelessly charged as recited by this claim language.

243. The S21 Ultra includes a battery (see battery in blue rectangle of image below).

244. Images showing a dis-assembled S21 Ultra are shown below and available at: https://www.ifixit.com/Teardown/Samsung+Galaxy+S21+Ultra+Teardown/141188

Step 13

245. The battery of the S21 Ultra can be wirelessly charged by various base units that are interoperable with the WPC Standard as well as Samsung chargers that support the WPC Standard and also Samsung's Fast Wireless Charging (see URL's and images below).

246. The following URLs are links to the WPC website and also the Samsung website and show the ability of the S21 Ultra to be wirelessly charged (images from websites shown below):

https://www.wirelesspowerconsortium.com/products/12631

https://www.samsung.com/us/mobile/mobile-accessories/phones/15w-wireless-charger-single-with-ta-dark-gray-ep-p2400tbegus/

https://www.samsung.com/us/support/answer/ANS00082564/

SAMSUNG ELECTRONICS GALAXY S21 ULTRA 5G (SM-G998N)

BRAND
Samsung Electronics

PRODUCT NAME
Galaxy S21 Ultra 5G

MANUFACTURER PART NUMBER
SM-G998N

PRODUCT TYPE
Power Class 0 Receiver

REGISTRATION DATE
February 27, 2022

ADDITIONAL DETAILS

Qi Registration id	12631
Version	1.2.4
Currently licensed	Yes
Power profile	Basic Power Profile
Maximum received power	4.4 watts

Power up with a quickness

Get the charge you need quickly, thanks to up to 15W of Fast Charging support. This boost of battery is compatible with USB PD and Adaptive Fast Charging travel adapters for an easy pick-me-up.

*Super Fast Wireless Charging speed requires included 25W power adapter and only available with Galaxy Note10, Note10+, S20, S20+, S20 Ultra, Note20, Note20 Ultra, S21, S21+, S21 Ultra, Z Fold, Z Fold2, Z Fold3, Z-Flip, Z-Flip3, Rainbows.
**Compatible with all Galaxy devices that support wireless charging. Charging speeds may vary by device. Actual charging speed may vary depending on usage, charging conditions and other factors. 25W power adapter and above required for Super Fast Wireless Charging. 15W power adapter and above required for normal charging.
**Compatible with Apple smartphone models iPhone X and later, that support up to 7.5W fast charging.

Use Wireless PowerShare on your Galaxy phone

Compatible Samsung devices

Most Qi-Compatible Samsung devices can be charged with Wireless PowerShare, but check out the full list of compatible devices just in case. The speed and power of the charge will vary by device.

Phones that can use and also be charged with Wireless PowerShare:

- Galaxy S22, S22+, and S22 Ultra
- Galaxy S21, S21+, and S21 Ultra
- Note20 5G and Note20 Ultra 5G
- Galaxy Note10, Note10+, and Note10+ 5G
- Galaxy Fold, Z Fold2, Z Fold3 and Z Fold4
- Galaxy Z Flip, Z Flip 5G, Z Flip3 and Z Flip4
- Galaxy S20 5G, S20+ 5G, S20 Ultra 5G, and S20 FE
- Galaxy S10e, S10, S10+, and S10 5G

247. ’500 claim 23 further recites “a receiver coil which has a substantially planar shape and located parallel to a surface of the portable device so that a magnetic field received from a primary coil in a base unit of an inductive charging system in a direction substantially perpendicular to the plane of the receiver coil is used to inductively generate a current in the receiver coil to power or charge the portable device.” As a non-limiting example, the S21 Ultra meets this part of the claim, as it includes a coil for receiving inductive power from a perpendicular field, as recited by this part of the claim.

248. The wireless charging coil in the S21 Ultra is shown above with respect to the “one or more primary coils” part of ’500 claim 1. The coil is responsive to a perpendicular magnetic field, as illustrated at WPC 1.2.4 Standard, Introduction, page 9 (shown above with respect to the “base unit” part of ’208 claim 1).

249. ’500 claim 23 further recites “a ferrite material layer placed behind the receiver coil and opposite to the surface of the portable device to provide shielding in the portable device from electromagnetic fields.” As a non-limiting example, the S21 Ultra also meets this part of the claim, as it has a ferrite layer behind its wireless charging coils as recited in this part of the claim.

250. An x-ray image and internal components image of a partially disassembled S21 Ultra are shown below as well as an image showing the backside (away from the surface for charging) of the coil assembly wherein a ferrite material layer is placed behind the receiver coil opposite to the surface of the portable device to provide shielding in the portable device; the images are available at the following URL’s:

https://www.ifixit.com/Teardown/Samsung+Galaxy+S21+Ultra+Teardown/141188

https://www.youtube.com/watch?v=MYSQub76fH8

251. ’500 claim 23 further recites “a receiver circuit designed to operate near a resonant frequency of a circuit formed by the receiver coil, the receiver circuit, and a compatible base unit primary coil and associated circuit when adjacent to the portable device for inductive powering or charging.” As a non-limiting example, the S21 Ultra also meets this part of the claim, as it includes a receiver circuit designed to operate near a resonant frequency for receiving inductive power as recited by this part of the claim.

252. The S21 Ultra includes a wireless transceiver ASIC such as the Renesas P9320S ASIC, as shown above, which forms in part a receiver circuit as claimed, as detailed further below.

253. The S21 Ultra is designed to operate near a resonant frequency as specified by this part of the claim, as specified by the WPC Standard as seen above with respect to the resonance aspects of the “first drive circuit” part of ’371 claim 1.

254. ’500 claim 23 further recites “wherein the receiver circuit is part of a receiver unit and comprises: a receiver rectifier circuit including one or more rectifiers and one or more capacitors; and a receiver communication and control circuit including a microcontroller and a communication FET to modulate the input impedance of the receiver circuit to communicate with the base unit through the primary coil; wherein when a current is generated in the receiver coil inductively by the primary coil in the base unit, the current is rectified by the one or more rectifiers and smoothed by the one or more capacitors in the receiver rectifier circuit and is used to power and activate the receiver communication and control circuit and to power or charge the portable

device; and wherein upon powering and activation of the receiver circuit by a primary coil in the base unit, the receiver circuit: communicates information corresponding to a voltage at an output of the receiver rectifier circuit and information associated with the portable device and/or receiver unit to enable the base unit to identify the portable device and/or receiver unit, to determine any appropriate charging or powering algorithm therefor, and to identify one or more primary coils of the base unit most aligned with the receiver coil for use in charging or powering the portable device; and subsequently, periodically communicates information corresponding to an output voltage or current of the receiver rectifier circuit to the base unit to enable the base unit to regulate in a closed loop manner the output voltage or current of the receiver rectifier circuit during the charging or powering of the portable device." As a non-limiting example, the S21 Ultra meets this part of the claim.

255. For example, the receiver circuit of the S21 Ultra together with the receiver coil forms at least part of the receiver unit, and the receiver circuit includes rectifiers and capacitors for receiving wireless power via the wireless charging coil. Moreover, the receiver circuit includes a receiver communication and control circuit including a microcontroller and a communication FET for communicating with the base unit by way of impedance modulation in the receiver coil to communicate with the base unit through the primary coil.

256. That the S21 Ultra includes a receiver unit and receiver circuit as specified by this part of the claim is illustrated above with respect to the "receiver unit" part, the "receiver circuit" subpart, and the "receiver rectifier circuit" and "receiver communication and control circuit" sub-sub parts of '371 claim 20 regarding the S22 Ultra, which apply equally to the S21 Ultra. The FETs there shown in red rectangles in the representative P9415-R datasheet connected to CMA, COM1, CMB, and COM2 are communication FETs as specified by this part of the claim.

257. That the S21 Ultra meets the communication and control aspects of this part of the claim are similarly illustrated by the "wherein upon powering and activation" part of '371 claim 20 regarding the S22 Ultra, which applies equally to the S21 Ultra.

258. The initial voltage/current information communicated by the S21 Ultra, as specified by this part of the claim, allows the base unit to identify a most aligned coil as described by this part of the claim, if the base unit has multiple coils and uses "Free Positioning" per the WPC Standard. E.g., WPC 1.2.4 Standard, Parts 1 and 2, Interface Definitions, page 93.

5.2.3.1 Signal Strength Packet (0x01)

Table 27 defines the format of the message contained in a Signal Strength Packet.

Table 27. Signal strength

	b_7	b_6	b_5	b_4	b_3	b_2	b_1	b_0
B_0	Signal Strength Value							

Signal Strength Value. The unsigned integer value in this field indicates the degree of coupling between the Primary Cell and Secondary Coil, with the purpose to enable Power Transmitters that use Free Positioning to determine the Primary Cell that provides optimum power transfer (see also Annex B, *Power Receiver Localization (Informative)*). To determine the degree of coupling, the Power Receiver shall monitor the value of a suitable variable during a Digital Ping. Examples of such variables are:

259. The above non-limiting examples illustrate Samsung's infringement of claims 1 and 23 of the '500 patent. Samsung infringes additional claims in the '500 patent, including for example claims 2-4, 9, 11-13, 18, 20, and 24-31, with the specific infringement contentions to be presented in discovery per the Court's procedure.

COUNT SIX: PATENT INFRINGEMENT OF THE '777 PATENT

260. Mojo Mobility incorporates by reference the preceding paragraphs as if fully stated herein.

261. Claims 1 and 15 of the '777 patent are reproduced below:

1. A base system for inductive charging of an electronic device comprising an inductive charging receiver and a battery electrically coupled to the inductive charging receiver, the base system comprising:

an inductive charging coil;

a coil drive circuit electrically coupled to the inductive charging coil, wherein the coil drive circuit provides power to the inductive charging coil by switching a voltage input to the inductive charging coil at an operating frequency;

a current detection circuit electrically coupled to the inductive charging coil; and

a microcontroller, wherein the microcontroller is configured for:

operating in a first mode of operation using a first protocol, wherein the first protocol is an inductive charging communication-and-control protocol that comprises uni-directional messaging, wherein the first mode of operation comprises:

receiving, using the current detection circuit, a first communication from the inductive charging receiver of the electronic device, wherein the first communication is based on the first protocol; and

regulating power delivered to the battery of the electronic device in response to the received first communication; and

operating in a second mode of operation using a second protocol, wherein the second protocol is an inductive charging communication-and-control protocol that defines bi-directional messaging, wherein the second mode of operation comprises:

receiving, using the current detection circuit, a second communication from the inductive charging receiver of the electronic device, wherein the second communication is based on the second protocol;

transmitting, by modulating the operating frequency with the coil drive circuit, a frequency-modulated third communication to the inductive charging receiver of the electronic device, wherein the frequency-modulated third communication is based on the second protocol; and

regulating power delivered to the battery of the electronic device in response to the received second communication;

wherein the first mode of operation is associated with a first power level and the second mode of operation is associated with a second power level, and

wherein the first power level and the second power level are different.

15. An electronic device capable of receiving power inductively, the electronic device comprising:

an inductive charging receiver coil;

a communication transmitter circuit electrically coupled to the inductive charging receiver coil for communicating through the coil;

a communication receiver circuit electrically coupled to the inductive charging receiver coil for communicating through the coil; and

a microcontroller, wherein the microcontroller is configured for:

operating in a first mode of operation using a first protocol, wherein the first protocol is an inductive charging communication-and-control protocol that comprises uni-directional messaging, wherein the first mode of operation comprises:

sending, using the communication transmitter circuit, a first communication to an inductive charger, wherein the first communication identifies the first protocol; and

receiving power using the inductive charging receiver coil;

operating in a second mode of operation using a second protocol, wherein the second protocol is an inductive charging communication-and-control protocol that defines bi-directional messaging, wherein the second mode of operation comprises:

sending, using the communication transmitter circuit, a second communication to the inductive charger, wherein the second communication identifies the second protocol;

receiving power using the inductive charging receiver coil; and

receiving, using the receiver circuit, a frequency-modulated third communication from the inductive charger based on the second protocol; and

wherein the first mode of operation is associated with a first power level and the second mode of operation is associated with a second power level, and

wherein the first power level and the second power level are different.

262. Samsung accused products which can transfer wireless power as specified by claim 1 infringe the claim. This includes Samsung wireless chargers. Samsung accused products which can receive wireless power as specified by claim 15 infringe the claim. This includes Samsung smartphones. Samsung accused products that infringe claim 1 and/or claim 15 of the ’777 patent (and/or any other claims in the patent) are herein collectively the “’777 accused products.” In the following, infringement of ’777 claim 1 by way of the 5400 Duo is illustrated to provide a non-limiting example of Samsung’s infringement of ’777 claim 1. Further in the following,

infringement of ’777 claim 15 by way of the S22 Ultra is illustrated to provide a non-limiting example of Samsung’s infringement of ’777 claim 15.

263. ’777 claim 1 begins, “A base system for inductive charging of an electronic device comprising an inductive charging receiver and a battery electrically coupled to the inductive charging receiver, the base system comprising:” As a non-limiting example, the 5400 Duo fits this description as it is a “base system for inductive charging” as specified by this introductory part of the claim.

264. The 5400 Duo can, on the left side, inductively charge a smartphone compatible with the WPC Standard at up to 5W and a Samsung Wireless Fast Charge capable smartphone (e.g., an S22 Ultra) at 10W+, and, on the right side, inductively charge a Samsung watch or earbud case at a lower power. For purposes of infringement of claim 1 of the ’777 patent, the left side of the 5400 Duo is addressed below.

265. Samsung website images of the 5400 Duo are shown below and available at: https://www.samsung.com/us/mobile/mobile-accessories/phones/15w-wireless-charger-duo-cable-dark-gray-ep-p5400cbegus/

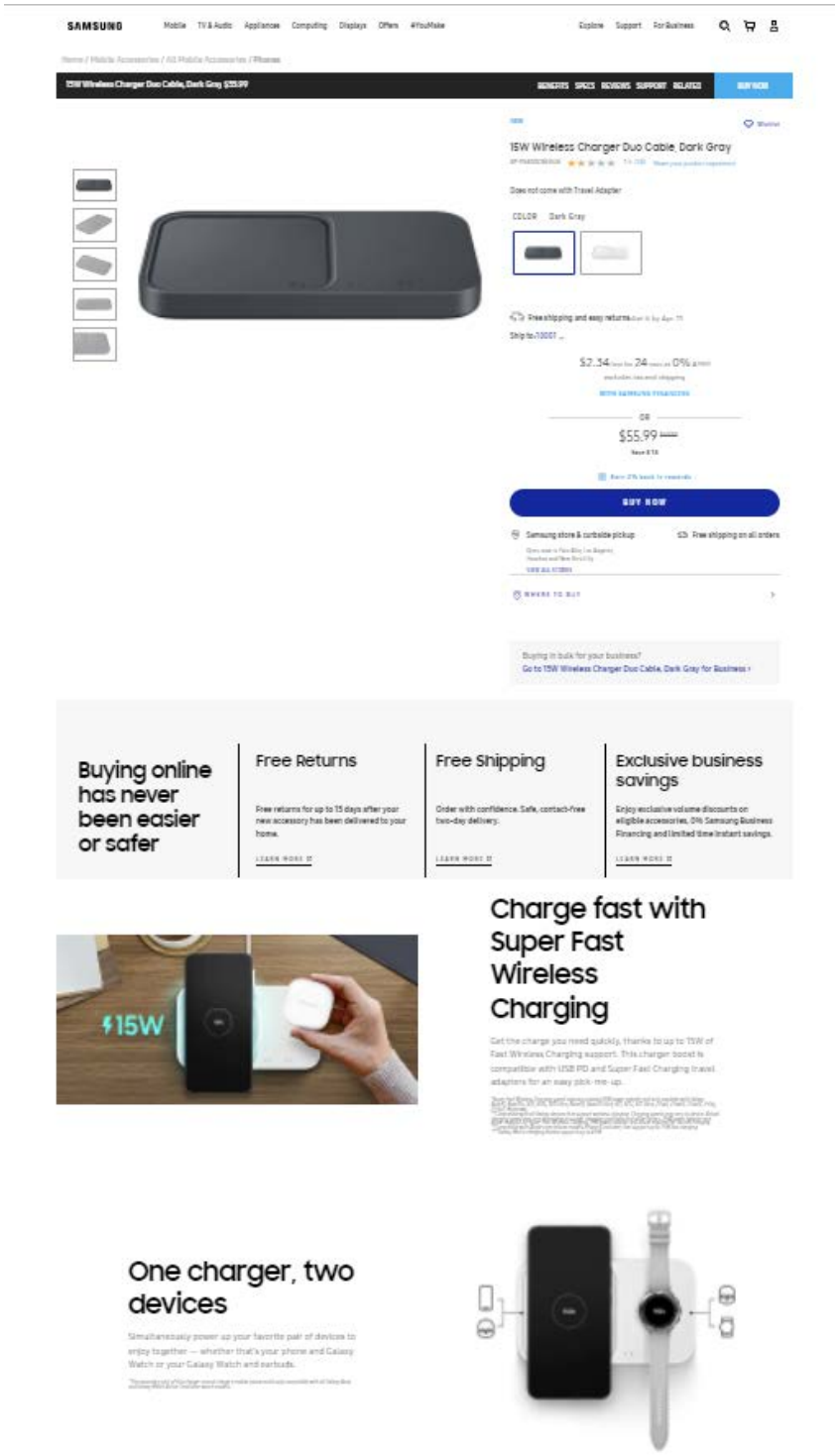
SAMSUNG
15W Wireless Charger Duo Cable, Dark Gray
Does not come with Travel Adapter
COLOR Dark Gray
$55.99
BUY NOW
Buying online has never been easier or safer
Free Returns
Free Shipping
Exclusive business savings
15W
Charge fast with Super Fast Wireless Charging
One charger, two devices

Get the charge you need quickly, thanks to up to 15W of Fast Wireless Charging support. This charger boost is compatible with USB PD and Super Fast Charging travel adapters for an easy pick-me-up.

**Super Fast Wireless Charging speed requires included 25W power adapter and only available with Galaxy Note10, Note10+, S20, S20+, S20 Ultra, Note20, Note20 Ultra, S21, S21+, S21 Ultra, Z Fold, Z Fold2, Z Fold3, Z-Flip, Z-Flip3, Rainbows.*
***Compatible with all Galaxy devices that support wireless charging. Charging speeds may vary by device. Actual charging speed may vary depending on usage, charging conditions and other factors. 25W power adapter and above required for Super Fast Wireless Charging. 15W power adapter and above required for normal charging.*
***Compatible with Apple smartphone models iPhone X and later, that support up to 7.5W fast charging.*
****Galaxy Watch charging feature supports up to 4.5W.*

266. ’777 claim 1 further recites “an inductive charging coil.” As a non-limiting example, the 5400 Duo meets this part of the claim, as shown above with respect to ’208 claim 1, “a base unit … comprising a plurality of primary coils” part.

267. ’777 claim 1 further recites “a coil drive circuit electrically coupled to the inductive charging coil, wherein the coil drive circuit provides power to the inductive charging coil by switching a voltage input to the inductive charging coil at an operating frequency.” As a non-limiting example, the 5400 Duo meets this part of the claim, as shown above with respect to ’208 claim 1, “a base unit … with a switching circuit” part.

268. ’777 claim 1 further recites “a current detection circuit electrically coupled to the inductive charging coil.” As a non-limiting example, the 5400 Duo also meets this part of the claim, as shown above with respect to ’208 claim 1, “a communications interface” regarding the demodulator part of the representative IDT P9236 ASIC.

269. ’777 claim 1 further recites “a microcontroller, wherein the microcontroller is configured for.” As a non-limiting example, the 5400 Duo also meets this part of the claim, as shown above with respect to ’208 claim 1, “a communications interface” regarding the microcontroller part of the representative IDT P9236 ASIC.

270. ’777 claim 1 further recites that the microcontroller is configured for “operating in a first mode of operation using a first protocol, wherein the first protocol is an inductive charging communication-and-control protocol that comprises uni-directional messaging.” As a non-limiting example, the 5400 Duo also meets this part of the claim.

271. The left side of the 5400 Duo is an inductive fast charger that operates in at least two modes. In a first mode, the left side of the 5400 Duo operates in the WPC Baseline Power Profile (BPP) communication and control protocol (≤ 5 Watts transferred power) in which it receives uni-directional communications from the receiver. This enables the 5400 Duo to charge Samsung low power receiver devices such as an earbud case and other OEM smartphones and devices that are capable of receiving wireless power in the WPC BPP profile but not the Samsung Wireless Fast Charge mode.

272. The uni-directional communication received by the base unit in this first mode is illustrated above with respect to the “communication and control circuit” part and “wherein the received communication of information includes” sub-part of ’371 claim 1.

273. In the first mode, the 5400 Duo receives communication for wireless charging and performs the wireless charging per WPC BPP, as shown here:

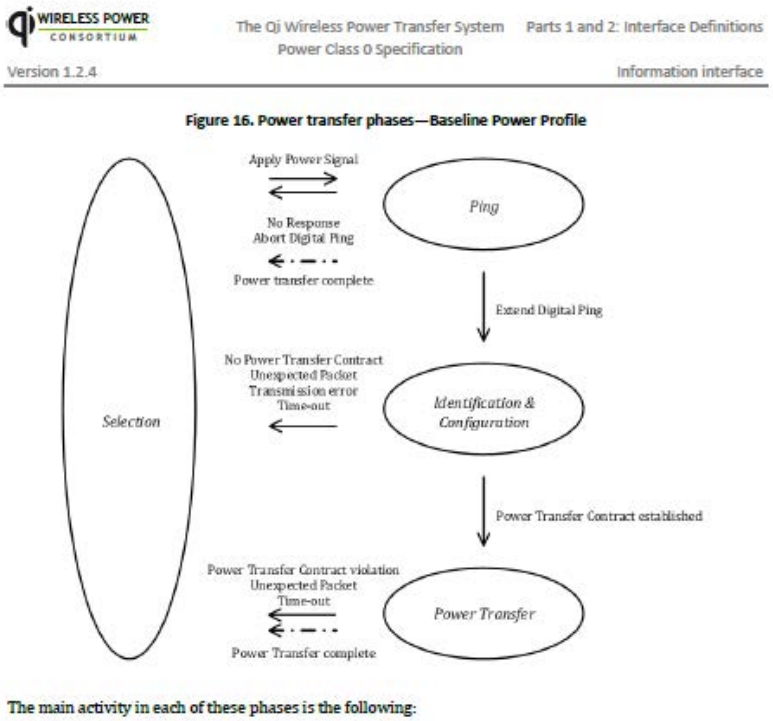

274. ’777 claim 1 further recites that the microcontroller is configured for “receiving, using the current detection circuit, a first communication from the inductive charging receiver of the electronic device, wherein the first communication is based on the first protocol; and regulating power delivered to the battery of the electronic device in response to the received first communication.” As a non-limiting example, the 5400 Duo also meets this part of the claim. Uni-directional communication received by the base unit in the first mode includes Signal Strength and Identification and Configuration messages (during the Ping and Identification and Configuration phases shown above in WPC 1.2.4 BPP, Interface Definitions, Fig. 16) and Control Error Packet (CEP) and Received Power messages (during the Power Transfer phase, also shown in Fig. 16), as illustrated above with respect to the “communication and control circuit” part and the “wherein the received communication of information includes,” “receive additional information,” and “regulate in a closed loop feedback manner” sub-parts of ’371 claim 1.

275. ’777 claim 1 further recites that the microcontroller is configured for “operating in a second mode of operation using a second protocol, wherein the second protocol is an inductive

charging communication-and-control protocol that defines bi-directional messaging." As a non-limiting example, the 5400 Duo also meets this part of the claim.

276. The left side of the 5400 Duo is able to charge in a second mode (e.g., the Samsung Wireless Fast Charge mode) at power levels over 5 Watts that uses a Samsung-Specific communication and control protocol based on the WPC Extended Power Profile (EPP) bi-directional communication and control protocol.

277. Excerpts from the Samsung Developer website are shown below and available at: https://developer.samsung.com/mobile/wireless-fast-charge.html.

2. Purpose

Samsung has been a pioneer and an advocate of the wireless charging technology by implementing it in smartphones since 2015. Samsung smartphones are certified by the Wireless Power Consortium (WPC), compliant to WPC Basic Power Profile (BPP) specification of 5W. Samsung smartphones are also compliant to Power Matter Alliance (PMA) standard specification. Samsung Wireless Fast Charge, a proprietary extension to WPC BPP specification has enhanced the wireless power delivery higher than 5W to Samsung smartphones for the sake of user's benefit, which is not compatible with generic WPC Extended Power Profile (EPP) specification. Samsung is enthusiastic to help any 3rd -party developers to use this document, in order to establish the safe and reliable eco-system of Samsung Wireless Fast Charge. From this document, 3rd party developers can learn to design their wireless charger products to fast-charge Samsung smartphones.

3. Conformance requirement

Any manufacturers deploying Samsung PPDE technology are obligated to attain the WPC (Wireless Power Consortium) certification of their wireless charger products including Samsung PPDE compliance test at designated ATLs (Authorized Test Labs).

Information about WPC PPDE compliance test is available at :
https://members.wirelesspowerconsortium.com/members/members-info/swg/proprietary-mode-safety-tests.html
[Login Required]

278. Excerpts from the WPC version 1.2.4 specification are shown below. Ex. K.

1.2 Scope

This document, *Parts 1 and 2: Interface Definitions*, defines the interface between a Power Transmitter and a Power Receiver, i.e. Power Class 0 Base Stations and Mobile Devices. Power Class 0 is the WPC designation for flat-surface devices, such as chargers, mobile phones, tablets, cameras, and battery packs, in the Baseline Power Profile (≤ 5 W) and Extended Power Profile (≤ 15 W).

Extended Power Profile

The minimum set of features applying to Power Transmitters and Power Receivers that can transfer power above 5 W.

5.3 Power Transmitter to Power Receiver communications interface

5.3.1 Introduction

The Power Transmitter communicates to the Power Receiver using Frequency Shift Keying, in which the Power Transmitter modulates the Operating Frequency of the Power Signal.

5.3.2.1 Modulation scheme

The Power Transmitter shall switch its Operating Frequency between the Operating Frequency f_{op} in the unmodulated state and the Operating Frequency f_{mod} in the modulated state. The difference between these two frequencies is characterized by two parameters:

279. Communication in the second mode of operation comprises bi-directional messaging. For example, the left side of the 5400 Duo uses bi-directional communication when charging a S22 Ultra, which is capable of being charged at up to 15 Watts in Samsung Wireless Fast Charge 2.0.

280. In this example, in the second mode, the communication received by the 5400 Duo from the S22 Ultra uses current modulation, and communication from 5400 Duo to the S22 Ultra uses frequency shift keying (FSK) per WPC EPP.

281. In the second mode, the messages received by the 5400 Duo from the S22 Ultra include Identification, Configuration, CEP, Received Power messages and some Samsung-Specific messages, and the messages sent from the 5400 Duo to the S22 Ultra include Acknowledge and Reserved messages as shown below.

282. In both the first and second modes of operation, the 5400 Duo receives communication from the receiver (e.g., an S22 Ultra or a Samsung earbud case) as shown below:

5.2 Power Receiver to Power Transmitter communications interface

5.2.1 Introduction

The Power Receiver communicates to the Power Transmitter using backscatter modulation. For this purpose, the Power Receiver modulates the amount of power that it draws from the Power Signal. The Power Transmitter detects this as a modulation of the current through and/or voltage across the Primary Cell. In other words, the Power Receiver and Power Transmitter use an amplitude modulated Power Signal to provide a Power Receiver to Power Transmitter communications channel.

283. ’777 claim 1 further recites “receiving, using the current detection circuit, a second communication from the inductive charging receiver of the electronic device, wherein the second communication is based on the second protocol.” As a non-limiting example, the 5400 Duo also meets this part of the claim. With the Samsung Wireless Fast Charge (a second protocol), the 5400 Duo receives messages from, for example, the S22 Ultra, including Samsung-specific messages indicating to the 5400 Duo that the S22 Ultra is capable of receiving power at the higher power levels of Samsung Wireless Fast Charge.

284. The Samsung Wireless Fast Charge is based on the WPC EPP protocol, which is illustrated below in the WPC version 1.2.4 specification.

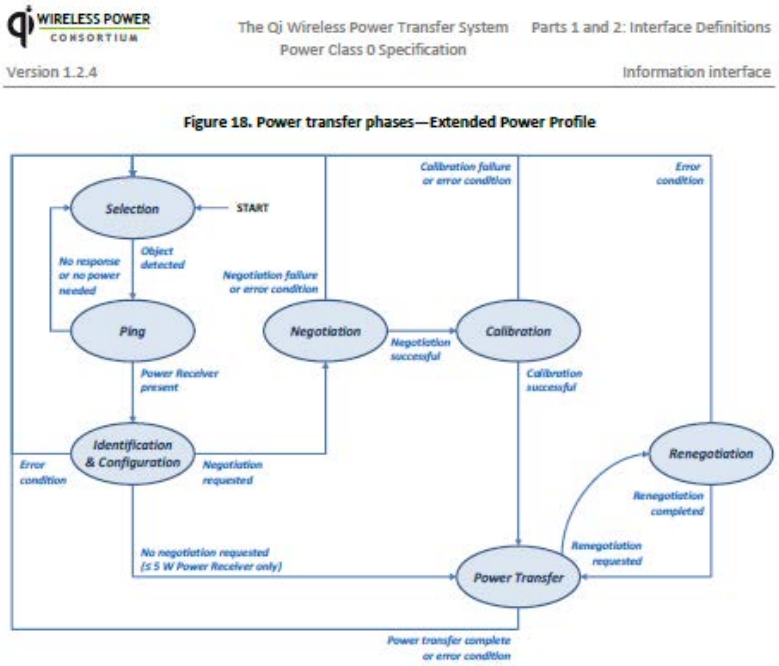

285. ’777 claim 1 further recites “transmitting, by modulating the operating frequency with the coil drive circuit, a frequency-modulated third communication to the inductive charging receiver of the electronic device, wherein the frequency-modulated third communication is based on the second protocol.” As a non-limiting example, the 5400 Duo also meets this part of the claim.

286. As described above, in the second mode (e.g., the Samsung Wireless Fast Charge), the 5400 Duo transmits data to an S22 Ultra using FSK communication per the WPC 1.2.4 EPP. Such data transmissions from the 5400 Duo include, for example, the “Acknowledge message” per WPC 1.2.4 EPP, as shown below, and the “Reserved message,” which is a Samsung-specific Wireless Fast Charge message.

Extended Power Profile:

- If the Neg bit in the received Configuration Packet is set to ZERO, the Power Transmitter should proceed to the *power transfer* phase without sending a Response.
- If the Neg bit in the received Configuration Packet is set to ONE, the Power Transmitter shall send an Acknowledge Response within $t_{response}$ after the end of the received Configuration Packet (see also Section 5.2.3.7, *Configuration Packet (0x51)*). Subsequently, the Power Transmitter should proceed to the *negotiation* phase. See Figure 21.

Table 55. Format of a Response

	Message	Description	Format
ACK	Acknowledge	Accept a request	'11111111'
NAK	Not-Acknowledge	Deny a request	'00000000'
ND	Not-Defined	Unrecognized or invalid request	'01010101'

287. '777 claim 1 further recites "regulating power delivered to the battery of the electronic device in response to the received second communication." As a non-limiting example, the 5400 Duo also meets this part of the claim. For example, the 5400 Duo in the Samsung Wireless Fast Charge mode charging an S22 Ultra regulates the power transfer in response to CEP messages received from the S22 Ultra, as described above.

288. In both the first and second modes of operation, the 5400 Duo regulates the power delivered to the receiver per the WPC Standard as shown below:

- *power transfer* In this phase, the Power Transmitter continues to provide power to the Power Receiver, adjusting its Primary Cell current in response to control data that it receives from the Power Receiver. Throughout this phase, the Power Transmitter monitors the parameters that are contained in the Power Transfer Contract. A violation of any of the stated limits on any of those parameters causes the Power Transmitter to abort the power transfer, and returns the system to the *selection* phase. Finally, the system may also leave the *power transfer* phase on request of the Power Receiver. Section 5.1.2 defines the system control protocols in the *ping, identification & configuration*, and *power transfer* phases from a Power Transmitter perspective. Section 5.1.3 defines the system control protocols in these four phases from a Power Receiver perspective.

Throughout the *power transfer* phase, the Power Transmitter and Power Receiver control the amount of power that is transferred. Figure 17 illustrates a schematic diagram of the power transfer control loop, which basically operates as follows: the Power Receiver selects a desired Control Point: a desired output current and/or voltage, a temperature measured somewhere in the Mobile Device, etc. In addition, the Power Receiver determines its actual Control Point. The Power Receiver may use any approach to determine a Control Point. Moreover, the Power Receiver may change this approach at any time during the *power transfer* phase. Using the desired Control Point and actual Control Point, the Power Receiver calculates a Control Error Value—for example, by simply taking the (relative) difference of the two output voltages or currents. The result is negative if the Power Receiver requires less power in order to reach its desired Control Point and positive if the Power Receiver requires more power in order to reach its desired Control Point. Subsequently, the Power Receiver transmits this Control Error Value to the Power Transmitter.

The Power Transmitter uses the Control Error Value and the actual Primary Cell current to determine a new Primary Cell current. After the system stabilizes from the communications of the Control Error Packet, the Power Transmitter has a short time window to control its actual Primary Cell current towards the new Primary Cell current. Within this window, the Power Transmitter reaches a new Operating Point: the amplitude, frequency, and duty cycle of the AC voltage that is applied to the Primary Cell. Subsequently, the Power Transmitter keeps its Operating Point fixed in order to enable the Power Receiver to communicate additional control and status information. For details, see Section 5.1.2.6.1, *Power transfer control*.

5.1.2.6 Power transfer phase (PTx perspective)

In the *power transfer* phase, the Power Transmitter controls the power transfer to the Power Receiver, in response to control data that it receives from the latter. For this purpose, the Power Transmitter shall receive zero or more of the following Packets:

- Control Error Packet.
- Received Power Packet.
- Charge Status Packet.
- End Power Transfer Packet.
- Renegotiate Packet.
- Any Proprietary Packet (as listed in Table 26). If the Power Transmitter does not know how to handle the message contained in the Proprietary Packet, the Power Transmitter shall ignore that message.

289. ’777 claim 1 further recites “wherein the first mode of operation is associated with a first power level and the second mode of operation is associated with a second power level, and wherein the first power level and the second power level are different.” As a non-limiting example, the 5400 Duo also meets this part of the claim.

290. The power level of BPP is less than or equal to 5 Watts (the first mode) and the power level of Samsung Wireless Fast Charge 2.0 is over 5 Watts and up to 15 Watts (the second mode), both modes in which the left side of the 5400 Duo can operate.

291. ’777 claim 15 begins, “An electronic device capable of receiving power inductively, the electronic device comprising:” As a non-limiting example, the S22 Ultra fits this description.

292. The S22 Ultra is capable of receiving power inductively at multiple power levels, for different charging speeds.

293. Excerpts from the Samsung website are shown below and available at: https://www.samsung.com/africa_en/support/mobile-devices/how-to-fast-charge-the-galaxy-s22-series-wired-or-wirelessly/

Charge your phone with Fast and Super fast wired charging or Fast wireless charging

The Galaxy S22 Series allows **Fast charging** and **Fast wireless charging** when you really need your phone to be up and running quickly. When you plug in a Samsung fast charger, a pop-up message prompting you to turn on the **Fast charging** feature will appear on your phone screen the first three times it is connected. **Super fast charging** is only available on select phones, and you need to use the charger as well as a 25W or 45W Samsung-approved adapter.

- **Fast charging:** To use the fast charging feature, use a battery charger that supports Adaptive fast charging. 'Adaptive Fast Charging' text along with the charging icon is marked on the charger.
- **Fast wireless charging:** To use this feature, use a charger and components that support the fast wireless charging feature.
- **Super fast charging:** To use the super fast charging feature, use a USB PD (Power Delivery) charger that supports Super fast charging. ‘Super Fast Charging’ text along with the charging icon is marked on the charger.

Fast charger

Fast wireless charger

Super fast charger

294. Excerpts from the Samsung website are shown below and available at: https://developer.samsung.com/mobile/wireless-fast-charge.html#:~:text=Samsung%20Wireless%20Fast%20Charge%2C%20a,Power%20Profile%20(EPP)%20specification.

On This Page

1. Introduction to Samsung Proprietary Power Delivery Extension
2. Purpose
3. Conformance requirement
FAQ

Power Matter Alliance (PMA) standard specification. Samsung Wireless Fast Charge, a proprietary extension to WPC BPP specification has enhanced the wireless power delivery higher than 5W to Samsung smartphones for the sake of user's benefit, which is not compatible with generic WPC Extended Power Profile (EPP) specification.

295. '777 claim 15 further recites "an inductive charging receiving coil." As a non-limiting example, the S22 Ultra meets this part of the claim, as shown above with respect to the "first primary coil" part of '371 claim 1.

296. '777 claim 15 further recites "a communication transmitter circuit electrically coupled to the inductive charging receiver coil for communicating through the coil." As a non-limiting example, the S22 Ultra meets this part of the claim, as illustrated above with respect to'371 claim 20, "receiver unit" part, "receiver circuit" sub-part, and "communication and control circuit" sub sub-part.

297. '777 claim 15 further recites "a communication receiver circuit electrically coupled to the inductive charging receiver coil for communicating through the coil." As a non-limiting example, the S22 Ultra meets this part of the claim.

298. In particular, as an example of the communication receiver circuit, the relevant sections in an exemplary wireless power transceiver ASIC for the S22 Ultra are shown below. For the representative P9415-R ASIC, the communication to the receiver is in the form of frequency

modulation of the power transfer from the base system. To detect this communication, the ASIC includes a frequency detector (communication receiver circuit) connected to the AC1 and AC2 input lines from the receiver coil to detect this Frequency Modulated (FM) signal. The microcontroller in the ASIC coordinates the operation of the ASIC and detects the communicated messages sensed by this communication receiver circuit.

299. Excerpts from the representative Renesas P9415-R ASIC datasheet are shown below.

RENESAS P9415-R Datasheet

8. Theory of Operation

The P9415-R is a highly integrated wireless power receiver IC for mobile devices. The device can receive up to 15W wirelessly using near-field magnetic induction. The P9415-R Rx will operate in WPC mode when the digital ping frequency is below 190 kHz from the transmitter.

Figure 15. Internal Block Diagram

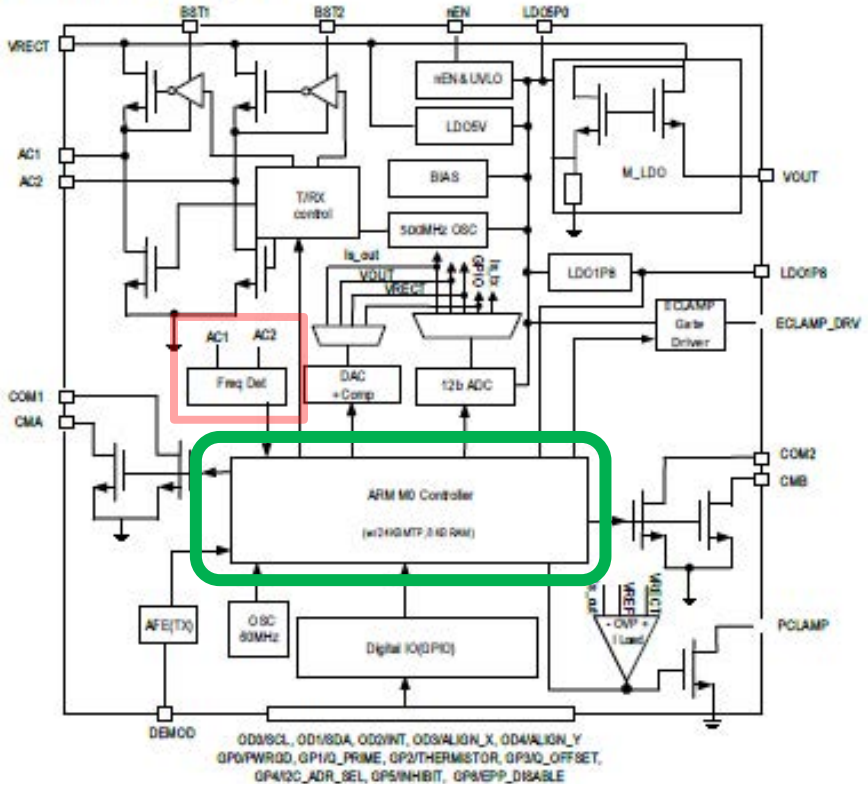

300. ’777 claim 15 further recites “a microcontroller, wherein the microcontroller is configured for.” As a non-limiting example, the S22 Ultra meets this part of the claim, as illustrated

above with respect to'371 claim 20, "receiver unit" part and "communication and control circuit" sub sub-part.

301. '777 claim 15 further recites "operating in a first mode of operation using a first protocol, wherein the first protocol is an inductive charging communication-and-control protocol that comprises uni-directional messaging, wherein the first mode of operation comprises." As a non-limiting example, the S22 Ultra meets this part of the claim.

302. The S22 Ultra operates in the first mode using the BPP protocol of WPC. The S22 Ultra is tested and certified for this first communication and control protocol for operation at up to ~ 4.4 Watts, as indicated on the WPC website, reference to which is available at: https://www.wirelesspowerconsortium.com/products/12184

SAMSUNG ELECTRONICS GALAXY S22 ULTRA (SM-S908U)

BRAND
Samsung Electronics

PRODUCT NAME
Galaxy S22 Ultra

MANUFACTURER PART NUMBER
SM-S908U

PRODUCT TYPE
Power Class 0 Receiver

REGISTRATION DATE
February 9, 2022

ADDITIONAL DETAILS

Qi Registration id	12184
Version	1.2.4
Currently licensed	Yes
Power profile	Basic Power Profile
Maximum received power	4.4 watts

303. The charging process proceeds per WPC BPP as noted in the WPC version-1.2.4 specification, an excerpt of which is shown below.

Figure 16. Power transfer phases—Baseline Power Profile

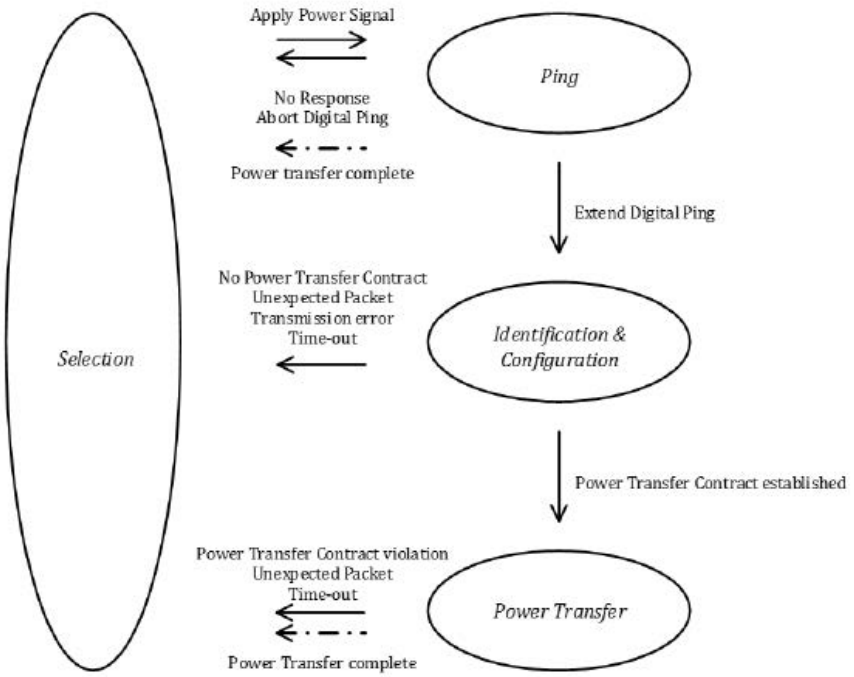

304. The S22 Ultra, when set on a wireless charger (base system) operates in different charging modes depending on the type of wireless charger (base system). When placed on a base system that does not support Samsung Wireless Fast Charge (e.g., a low power charger operating at ≤ 5 Watts in a first mode), the S22 Ultra operates as an inductive power receiver using the WPC BPP communication and control protocol in which the S22 Ultra sends uni-directional communications to the base system that enable the base system to wirelessly charge the S22 Ultra.

305. ’777 claim 15 further recites “sending, using the communication transmitter circuit, a first communication to an inductive charger, wherein the first communication identifies the first protocol.” As a non-limiting example, the S22 Ultra meets this part of the claim.

306. The communication transmitter circuit in the S22 Ultra sends an Identification packet to the base system, such as, the WPC Major and Minor Rev. number, which, per WPC, identifies the S22 Ultra as a BPP compatible receiver (≤5 Watts) adhering to WPC 1.2 for this first protocol, as illustrated below from the WPC version-1.2.4 specification.

WIRELESS POWER CONSORTIUM
The Qi Wireless Power Transfer System Power Class 0 Specification
Parts 1 and 2: Interface Definitions
Version 1.2.4
Information interface

5.2.3.8 Identification Packet (0x71)

Table 35 defines the format of the message contained in an Identification Packet.

Table 35. Identification

	b_7	b_6	b_5	b_4	b_3	b_2	b_1	b_0
B_0	Major Version				Minor Version			
B_1	(MSB)	Manufacturer Code						
B_2								(LSB)
B_3	Ext	(MSB)	Basic Device Identifier					
⋮								
B_6								(LSB)

Major Version. The combination of this field and the Minor Version field identifies to which revision of this Specification the Power Receiver complies. The Major Version field shall contain the binary coded digit value 0x1.

Minor Version. The combination of this field and the Major Version field identifies to which minor revision of this Specification the Power Receiver complies. The Minor Version field shall be set according to the power profile of the Power Receiver.

Table 36. Minor Version field settings

PRx Power Profile	Minor Version Setting	Neg Bit
Baseline Power Profile	0x1 or 0x2	ZERO
Extended Power Profile	0x2	ONE

Manufacturer Code. The bit string contained in this field identifies the manufacturer of the Power Receiver, as specified in the Power Receiver Manufacturer Codes, Wireless Power Consortium.

307. The S22 Ultra sends further messages to the base system for Configuration, which messages include various configuration information to enable charging according to this first protocol, including maximum power level (5 Watts) associated with this first mode, as illustrated below from the WPC version-1.2.4 specification.

5.2.3.7 Configuration Packet (0x51)

Table 34 defines the format of the message contained in a Configuration Packet.

Table 34. Message in a Configuration Packet

	b_7	b_6	b_5	b_4	b_3	b_2	b_1	b_0
B_0	Power Class		Maximum Power Value					
B_1	Reserved							
B_2	Prop	Reserved			ZERO	Count		
B_3	Window Size					Window Offset		
B_4	Neg	Polarity*	Depth*		Reserved			

* In the Baseline Power Profile, these bits are Reserved.

308. ’777 claim 15 further recites “receiving power using the inductive charging receiver coil.” As a non-limiting example, the S22 Ultra meets this part of the claim. For example, the wireless power ASIC in the S22 Ultra is powered by inductive power received via the wireless charging receiver coil. Moreover, the battery of the S22 Ultra is charged with so received inductive power.

309. ’777 claim 15 further recites “operating in a second mode of operation using a second protocol, wherein the second protocol is an inductive charging communication-and-control protocol that defines bi-directional messaging, wherein the second mode of operation comprises: sending, using the communication transmitter circuit, a second communication to the inductive charger, wherein the second communication identifies the second protocol; receiving power using the inductive charging receiver coil; and receiving, using the receiver circuit, a frequency-modulated third communication from the inductive charger based on the second protocol.” As a non-limiting example, the S22 Ultra meets this part of the claim.

310. The S22 Ultra, when set on a Samsung base system (such as the 5400 Duo) that supports charging at power levels over 5 Watts per the Samsung Wireless Fast Charge, communicates bi-directionally with the base system.

311. The representative Renesas ASIC P9415-R, described above, is able to operate as a Samsung Wireless Fast Charge variation of an EPP receiver according to WPC and as described in the Renesas P415-R datasheet, excerpts of which are shown below.

RENESAS P9415-R Datasheet

Figure 20. WPC System Feedback Control

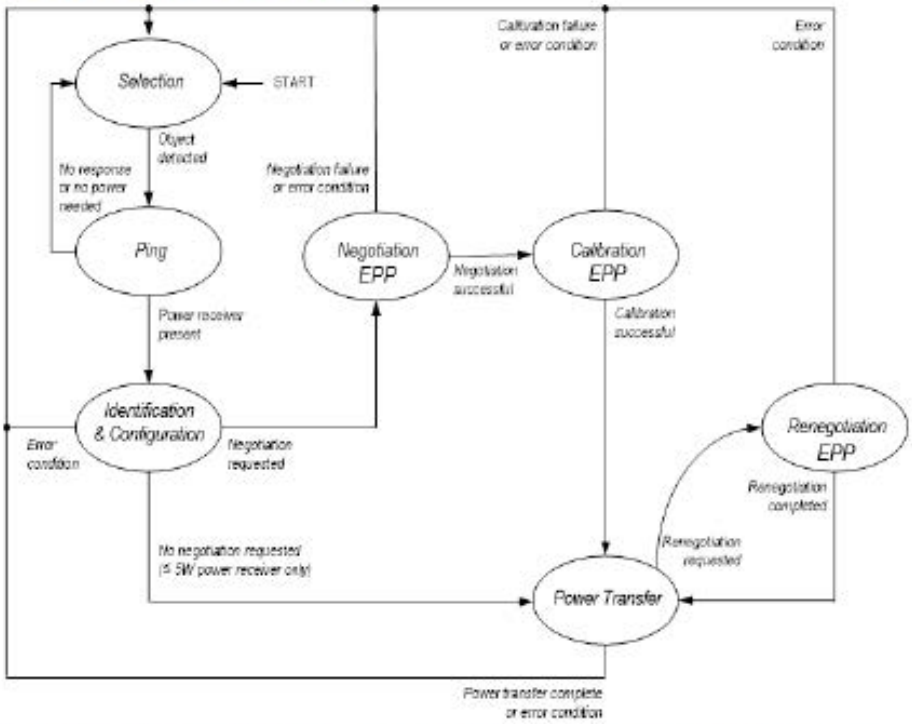

The P9415-R goes through six phases: Selection, Ping, Identification & Configuration, Negotiation, Calibration, and Power Transfer.

8.2.8 Selection

In this phase, the P9415-R senses or delivers the wireless power and proceeds to the Ping state. It monitors the rectified voltage or DEMOD signal, and when the voltage is above the V_{UVLO_rising} threshold, the P9415-R prepares to communicate with the base station or enter power Ping mode.

8.2.9 Ping

In this phase, the P9415-R transmits a Signal Strength Packet as the first communication packet to instruct the base to keep the power signal ON (or the P9415-R detects a Signal Strength Packet). After sending/receiving the Signal Strength Packet, the P9415-R proceeds to the Identification and Configuration phase. If, instead, an End of Power Packet is sent or an invalid response is sent, then it remains in the Ping phase.

In this phase, the P9415-R sends/expects the following packets:

- Signal Strength Packet
- End of Power Packet

© 2021 Renesas Electronics Corporation 25 May 4, 2021

RENESAS P9415-R Datasheet

8.2.10 Identification and Configuration (ID and Config)

In this phase, the P9415-R sends or expects the following packets:

- Identification Packet
- Configuration Packet

After the transmission of the Configuration Packet, the P9415-R proceeds to the Negotiation phase.

8.2.11 Negotiation

The Power Receiver negotiates with the Power Transmitter to fine-tune the Power Transfer Contract. For this purpose, the Power Receiver sends negotiation requests to the Power Transmitter, where the Power Transmitter can grant or deny.

8.2.12 Calibration

The Power Receiver provides its Received Power back to the Power Transmitter.

8.2.13 Power Transfer

In this phase, the P9415-R controls the power transfer by means of the following Control Data Packets:

- Control Error Packets
- Rectified Power Packet
- End Power Transfer Packet

8.2.14 Renegotiation

In this phase, the Power Receiver can make adjustments to the Power Transfer Contract, if required. If necessary, this phase can be aborted prematurely without changing the Power Transfer Contract.

8.2.15 End of Power Transfer (EPT)

In the event of EPT, the device turns off the LDO only after the AP instructs the P9415-R to continuously send End of Power (EPT) packets until the transmitter removes the power and the rectifier voltage on the receiver side drops below the UVLO threshold.

312. In this second mode, the S22 Ultra, being placed, for example, on a 5400 Duo, initially sends Identification and Configuration messages according to BPP to the 5400 Duo to establish communication and enter an initial Power Transmission phase. After a few seconds, the S22 Ultra sends multiple messages per the Samsung Wireless Fast Charge protocol to the 5400 Duo to indicate that it is capable of receiving power at a higher power level. Since the 5400 Duo is capable of delivering higher power levels according to Samsung Wireless Fast Charge, the 5400 Duo responds with Acknowledge and Reserved messages sent by FSK modulation of the operating frequency, which messages the S22 Ultra receives. After multiple Samsung-Specific communication exchanges between the S22 Ultra and the 5400 Duo per the Samsung Wireless Fast Charge protocol, the S22 Ultra enters the second mode of operation based on the Samsung Wireless Fast Charge protocol wherein the S22 Ultra receives power at a higher power level of the second mode.

313. The Acknowledge and Reserved messages sent in Samsung Wireless Fast Charge are examples of the claimed third communications with the second protocol.

314. In the second mode, power is received using the inductive charging receiver coil, as claimed. For example, the wireless power ASIC in the S22 Ultra is powered inductively with the inductive charging receiver coil, and the battery of the S22 Ultra is charged with so received inductive power.

315. ’777 claim 15 further recites “wherein the first mode of operation is associated with a first power level and the second mode of operation is associated with a second power level, and wherein the first power level and the second power level are different.” As a non-limiting example, the S22 Ultra meets this part of the claim.

316. The S22 Ultra can receive power inductively at multiple power levels associated with the two modes detailed above. Specifically, for example, the S22 Ultra supports receiving inductive power up to 5 Watts according to the BPP protocol (the first mode) and up to 10+ Watts per the Samsung Wireless Fast Charge protocol (the second mode).

317. Claim 24 of the ’777 patent is also infringed, for example, by the 5400 Duo, as illustrated by the evidence cited above with respect to ’777 claim 1.

318. The above non-limiting examples illustrate Samsung’s infringement of claims 1, 15, and 24 of the ’777 patent. Samsung infringes additional claims in the ’777 patent, including for example claims 2, 5-14, 17, and 20-23, with the specific infringement contentions to be presented in discovery per the Court’s procedure.

COUNT SEVEN: PATENT INFRINGEMENT OF THE ’942 PATENT

319. Mojo Mobility incorporates by reference the preceding paragraphs as if fully stated herein.

320. Claims 1 and 21 of the ’942 patent are reproduced below:

1. A system for providing power inductively to a portable device comprising a battery and an inductive receiver unit including a receiver coil and a receiver circuit, the system comprising:

a first primary coil that is substantially planar and substantially parallel to a charging surface of the system for providing power inductively to the portable device;

a first drive circuit, including a FET driver, a capacitor, and a FET switch, coupled to a DC voltage input and coupled to the first primary coil, wherein during operation the first drive circuit is configured to apply an alternating electrical current to the first primary coil at an operating frequency and duty cycle to generate an alternating magnetic field in a direction substantially perpendicular to the plane of the first primary coil and the charging surface of the system to provide power inductively to the portable device, wherein the operating frequency is within a range of frequencies (i) that are near a resonance frequency of a circuit comprising the first primary coil and the capacitor, (ii) such that increasing values of the operating frequency within the range of frequencies would correspond to a lower voltage or current induced in an output of the receiver circuit and (iii) that allow activation and powering of the receiver unit and charging the battery of the portable device;

a first sense circuit, including a low pass filter and an amplifier, coupled to the first primary coil to detect communication of information induced in the first primary coil by the receiver coil; and

a communication and control circuit, including a microcontroller coupled to the first drive circuit and the first sense circuit, configured to:

detect, through the first sense circuit, a received communication of information in the first primary coil;

operate the first drive circuit to inductively transfer power from the first primary coil to the receiver coil to activate and power the receiver unit to enable the receiver circuit to communicate the information detected in the first primary coil via the first sense circuit, wherein the received communication of information includes information to enable the communication and control circuit to configure the inductive transfer of power to the portable device, wherein the received communication of information includes:

information corresponding to a voltage or current induced by the first primary coil at the output of the receiver circuit;

a unique identification code; and

a power requirement; and

operate the first drive circuit according to the power requirement to provide the power from the first primary coil to the receiver coil to power the receiver unit and charge the battery of the portable device, wherein to charge the battery of the portable device the communication and control circuit is further configured to:

receive additional information in the first primary coil corresponding to the voltage or current at the output of the receiver circuit while charging the battery of the portable device;

regulate in a closed loop feedback manner the voltage or current at the output of the receiver circuit in accordance with the received additional information corresponding to the voltage or current at the output of the receiver circuit by adjusting at least one of the operating frequency, the duty cycle, and a DC voltage at the DC voltage input of the first drive circuit while charging the battery of the portable device;

monitor for continued presence of the portable device and completion of the charging of the battery of the portable device detected by the communication and control circuit through the first sense circuit; and

if the portable device is no longer present or charging is complete, stop operation of the first drive circuit for the provision of power inductively to the portable device.

21. A portable device configured to receive inductive power from an inductive charging system comprising a primary coil and associated circuit, the portable device comprising:

a battery;

a coil substantially planar in shape and located parallel to a charging surface of the portable device so that an alternating magnetic field, when received through the charging surface of the portable device from the primary coil of the inductive charging system in a direction substantially perpendicular to the plane of the coil, inductively generates a current in the coil to provide power inductively to the portable device when the portable device is placed on the inductive charging system for charging the battery of the portable device;

a ferrite layer positioned under the coil on a side of the coil opposite to the charging surface of the portable device; and

a receiver circuit powered by the received inductive power from the inductive charging system, wherein the receiver circuit comprises:

a receiver rectifier circuit including a rectifier and a capacitor;

a receiver communication and control circuit including a microcontroller, wherein the receiver communication and control circuit is configured to modulate the current in the coil to communicate with the inductive charging system while the receiver circuit is being powered by the inductive charging system;

a voltage regulator coupled to an output of the receiver rectifier circuit and coupled to the microcontroller, wherein the voltage regulator is configured to provide a regulated voltage to power the microcontroller from the received inductive power; and

a battery charging circuit configured to charge the battery, wherein the battery charging circuit is coupled to the output of the receiver rectifier circuit and coupled to the battery and is configured to begin drawing current when the output of the receiver rectifier circuit reaches a set minimum voltage value;

wherein when a current is generated in the coil inductively by the primary coil:

the receiver rectifier circuit is configured to rectify and smooth the current,

the voltage regulator is configured to use the current to power and activate the microcontroller, and

the battery charging circuit is configured to use the current to charge the battery of the portable device; and

wherein upon powering and activation of the receiver circuit by the primary coil, the receiver circuit is configured to:

communicate to the inductive charging system information corresponding to a voltage or current value at the output of the receiver rectifier circuit induced by the primary coil, a unique identifier code, and a power requirement; and

periodically communicate to the inductive charging system additional information corresponding to a presently induced output voltage or current of the receiver rectifier circuit to enable the inductive charging system to regulate in a closed loop feedback manner the output voltage or current of the receiver rectifier circuit during the charging of the portable device.

321. Samsung accused products which can provide wireless power as specified by claim 1 infringe the claim. This includes Samsung smartphones and wireless chargers. Samsung accused products which can receive wireless power as specified by claim 21 infringe the claim. This includes Samsung smartphones, wearable products, and earbud products. Samsung accused products that infringe claim 1 and/or claim 21 of the ’942 patent (and/or any other claims in the patent) are herein collectively the “’942 accused products.” In the following, infringement of ’942 claims 1 and 21 by way of the S22 Ultra is illustrated to provide a non-limiting example of Samsung’s infringement of the ’942 patent. Infringement of ’942 claim 1 by way of the 5400 Duo is also illustrated to provide another non-limiting example of Samsung’s infringement of the ’942 patent.

322. ’942 claim 1 begins, “A system for providing power inductively to a portable device comprising: a battery and an inductive receiver unit including a receiver coil and a receiver circuit, the system comprising.” As a non-limiting example, the S22 Ultra meets this part of the claim by way of its Wireless PowerShare feature with which it can wirelessly charge various mobile devices with wireless power receivers, as illustrated above with respect to ’371 claim 1, “system for providing power inductively” part.

323. As another non-limiting example, the 5400 Duo wireless charger meets this part of the claim as it can wirelessly charge various mobile devices with wireless power receivers, as illustrated above with respect to ’208 claim 1, “[a] charger system” part.

324. ’942 claim 1 further recites “a first primary coil that is substantially planar and substantially parallel to a charging surface of the system for providing power inductively to the portable device;” As a non-limiting example, the S22 Ultra meets this part of the claim, as it includes a wireless charging coil as shown above with respect to ’371 claim 1, “first primary coil” part.

325. As another non-limiting example, the 5400 Duo wireless charger meets this part of the claim, as it includes wireless charging coils, for example, as shown above with respect to ’208 claim 1, “plurality of primary coils” part.

326. ’942 claim 1 further recites “a first drive circuit, including a FET driver, a capacitor, and a FET switch, coupled to a DC voltage input and coupled to the first primary coil, wherein during operation the first drive circuit is configured to apply an alternating electrical current to the first primary coil at an operating frequency and duty cycle to generate an alternating magnetic field in a direction substantially perpendicular to the plane of the first primary coil and the charging surface of the system to provide power inductively to the portable device, wherein the operating frequency is within a range of frequencies (i) that are near a resonance frequency of a circuit

comprising the first primary coil and the capacitor, (ii) such that increasing values of the operating frequency within the range of frequencies would correspond to a lower voltage or current induced in an output of the receiver circuit and (iii) that allow activation and powering of the receiver unit and charging the battery of the portable device;" As non-limiting examples, the S22 Ultra and 5400 Duo each meet this part of the claim.

327. The S22 Ultra has a drive circuit including a FET driver, a FET switch, and a capacitor as recited by this part of the claim, as illustrated above with respect to '371 claim 1, "first drive circuit" part.

328. The 5400 Duo wireless charger has a drive circuit as recited by this part of the claim, including FET drivers, FETs, and capacitors, as illustrated above with respect to '208 claim 1, "base unit" part.

329. The magnetic fields generated by the charging coils in the S22 Ultra and the 5400 Duo are substantially perpendicular to the plane of the coils. E.g., WPC 1.2.4 Standard, Introduction, page 9 (shown above with respect to '208 claim 1, "base unit" part).

330. The S22 Ultra and 5400 Duo each meet the frequency range and resonance frequency aspects of this claim part, as illustrated above with respect to '371 claim 1, "first drive circuit" part, with respect to the WPC Standard, which applies to both the S22 Ultra and the 5400 Duo.

331. That the S22 Ultra meets the frequency range and resonance frequency aspects of this part of the claim is further seen in the FCC filings submitted by Samsung as shown above with respect to '371 claim 1, "first drive circuit" part.

332. That the 5400 Duo meets the frequency range and resonance frequency aspects of this part of the claim is further seen in the FCC filings submitted by Samsung with respect to the

5400 Duo, as seen below where the operating frequencies are shown, near the resonance frequencies specified by the WPC Standard.

https://fcc.report/FCC-ID/A3LEPP5400 (*See* "Test Report" link.)

2.1 Product Description

The Samsung Electronics Co., Ltd., Model: EP-P5400 (referred to as the EUT in this report) is an WIRELESS CHARGER DUO. Product specification information described herein was obtained from product data sheet or user's manual.

DEVICE TYPE	WIRELESS CHARGER DUO
OPERATING FREQUENCY	Antenna 1 : 119 kHz ~ 122 kHz, 126.2 kHz ~ 129.2 kHz Antenna 2 : 126.2 kHz ~ 129.2 kHz Antenna 3 :144.5 kHz ~ 147.5 kHz
RATED RF OUTPUT POWER	76.7 dBμV/m
ANTENNA TYPE	Antenna 1 (Sigle Coil) Antenna 2 (Alpha Coil) Antenna 3 (Gear Coil)
MODULATION	ASK
RATED SUPPLY VOLTAGE	DC 9.0 V

333. '942 claim 1 further recites "a first sense circuit, including a low pass filter and an amplifier, coupled to the first primary coil to detect communication of information induced in the first primary coil by the receiver coil; and" As non-limiting examples, the S22 Ultra and 5400 Duo each meet this part of the claim.

334. The S22 Ultra includes a sense circuit that senses communications through its charging coil and is structured as recited by this part of the claim. This is illustrated, for example, as shown above with respect to the "sense circuit" part of '371 claim 1 as to the S22 Ultra.

335. The 5400 Duo includes a sense circuit that senses communications through its charging coils and is structured as recited by this part of the claim. This is illustrated, for example, above with respect to the "communication interface" part of '208 claim 1. For example, the IDT/Renesas IDT P9236 ASICs (or similar ASICs) and associated external circuitry included in the 5400 Duo form a sense circuit as specified by this part of the claim.

336. ’942 claim 1 further recites “a communication and control circuit, including a microcontroller coupled to the first drive circuit and the first sense circuit, configured to: detect, through the first sense circuit, a received communication of information in the first primary coil; operate the first drive circuit to inductively transfer power from the first primary coil to the receiver coil to activate and power the receiver unit to enable the receiver circuit to communicate the information detected in the first primary coil via the first sense circuit, wherein the received communication of information includes information to enable the communication and control circuit to configure the inductive transfer of power to the portable device, wherein the received communication of information includes: information corresponding to a voltage or current induced by the first primary coil at the output of the receiver circuit; a unique identification code; and a power requirement; and operate the first drive circuit according to the power requirement to provide the power from the first primary coil to the receiver coil to power the receiver unit and charge the battery of the portable device, wherein to charge the battery of the portable device the communication and control circuit is further configured to: receive additional information in the first primary coil corresponding to the voltage or current at the output of the receiver circuit while charging the battery of the portable device; regulate in a closed loop feedback manner the voltage or current at the output of the receiver circuit in accordance with the received additional information corresponding to the voltage or current at the output of the receiver circuit by adjusting at least one of the operating frequency, the duty cycle, and a DC voltage at the DC voltage input of the first drive circuit while charging the battery of the portable device; monitor for continued presence of the portable device and completion of the charging of the battery of the portable device detected by the communication and control circuit through the first sense circuit; and if the portable device is no longer present or charging is complete, stop operation of the first drive circuit for the provision of power inductively to the portable device..” As non-limiting examples, the S22 Ultra

and 5400 Duo each meet this part of the claim by way of, inter alia, wireless power ASICS with microcontrollers that detect communications through their sense circuits and control their drive circuits as specified by this part of the claim.

337. As a non-limiting example, the S22 Ultra meets this part of the claim as illustrated above with respect to ’371 claim 1, “communication and control circuit” part.

338. As a non-limiting example, the 5400 Duo meets this part of the claim as illustrated in part above with respect to ’208 claim 1, “communications interface” part.

339. That the S22 Ultra and 5400 Duo each meet this part of the claim is further seen in the WPC Standard (with which the S22 Ultra and 5400 Duo are each compatible), as illustrated above with respect to ’371 claim 1, “communication and control circuit” part, where parts of the WPC Standard are illustrated.

340. ’942 claim 21 begins, “A portable device configured to receive inductive power from an inductive charging system comprising a primary coil and associated circuit, the portable device comprising.” As a non-limiting example, the S22 Ultra fits the description in this introductory part of the claim, as the S22 Ultra is a portable device that can be inductively powered for wireless charging its battery, as illustrated above with respect to ’371 claim 20.

341. ’942 claim 21 further recites “a battery.” As a non-limiting example, the S22 Ultra fits this description, as it includes a battery that can be wirelessly charged as claimed, as illustrated above with respect to ’371 claim 20, “battery” part.

342. ’942 claim 21 further recites “a coil substantially planar in shape and located parallel to a charging surface of the portable device so that an alternating magnetic field, when received through the charging surface of the portable device from the primary coil of the inductive charging system in a direction substantially perpendicular to the plane of the coil, inductively generates a current in the coil to provide power inductively to the portable device when the portable

device is placed on the inductive charging system for charging the battery of the portable device." As a non-limiting example, the S22 Ultra meets this part of the claim, as it includes a coil for receiving inductive power, as recited by this part of the claim, as illustrated above with respect to '371 claim 20, "receiver coil" part.

343. '942 claim 21 further recites "a ferrite layer positioned under the coil on a side of the coil opposite to the charging surface of the portable device." As a non-limiting example, the S22 Ultra also meets this part of the claim, as it has a ferrite layer behind its wireless charging coil, as recited in this part of the claim, as illustrated above with respect to '371 claim 20, "ferromagnetic layer" part.

344. '942 claim 21 further recites "a receiver circuit powered by the received inductive power from the inductive charging system, wherein the receiver circuit comprises: a receiver rectifier circuit including a rectifier and a capacitor; a receiver communication and control circuit including a microcontroller, wherein the receiver communication and control circuit is configured to modulate the current in the coil to communicate with the inductive charging system while the receiver circuit is being powered by the inductive charging system; a voltage regulator coupled to an output of the receiver rectifier circuit and coupled to the microcontroller, wherein the voltage regulator is configured to provide a regulated voltage to power the microcontroller from the received inductive power; and a battery charging circuit configured to charge the battery, wherein the battery charging circuit is coupled to the output of the receiver rectifier circuit and coupled to the battery and is configured to begin drawing current when the output of the receiver rectifier circuit reaches a set minimum voltage value." As a non-limiting example, the S22 Ultra also meets these parts of the claim, as illustrated above with respect to '371 claim 20, "receiver rectifier circuit," "receiver communication and control circuit," "voltage regulator," and "battery charging circuit" parts.

345. ’942 claim 21 further recites “wherein when a current is generated in the coil inductively by the primary coil: the receiver rectifier circuit is configured to rectify and smooth the current, the voltage regulator is configured to use the current to power and activate the microcontroller, and the battery charging circuit is configured to use the current to charge the battery of the portable device.” As a non-limiting example, the S22 Ultra also meets this part of the claim, as illustrated above with respect to ’371 claim 20, “wherein when a current is generated in the receiver coil inductively” part.

346. ’942 claim 21 further recites “wherein upon powering and activation of the receiver circuit by the primary coil, the receiver circuit is configured to: communicate to the inductive charging system information corresponding to a voltage or current value at the output of the receiver rectifier circuit induced by the primary coil, a unique identifier code, and a power requirement; and periodically communicate to the inductive charging system additional information corresponding to a presently induced output voltage or current of the receiver rectifier circuit to enable the inductive charging system to regulate in a closed loop feedback manner the output voltage or current of the receiver rectifier circuit during the charging of the portable device.” As a non-limiting example, the S22 Ultra also meets this part of the claim, as illustrated above with respect to ’371 claim 20, “wherein upon powering and activation of the receiver circuit” part.

347. The above non-limiting examples illustrate Samsung’s infringement of claims 1 and 21 of the ’942 patent. Samsung infringes additional claims in the ’942 patent, including for example claims 2-13, 18,19, 22-27, and 29-30, with the specific infringement contentions to be presented in discovery per the Court’s procedure.

VI. DAMAGES

348. Plaintiff is entitled to pre-suit damages for Samsung's infringement which includes damages from the date of issuance of each of the patents-in-suit, for a period up to six years prior

to the filing of the suit, in accord with 35 U.S.C. § 286. Further, there is no failure under 35 U.S.C. § 287 that would limit or otherwise inhibit pre-suit damages.

349. Plaintiff is further entitled to post-suit damages for Samsung's infringement after the filing of this lawsuit.

350. Plaintiff is entitled to damages under 35 U.S.C. § 284.

DEMAND FOR JURY TRIAL

351. Plaintiff demands a trial by jury of any and all issues triable of right before a jury, except for future patent infringement, which is an issue in equity to be determined by the Court.

PRAYER FOR RELIEF

WHEREFORE, Plaintiff prays for the following relief:

A. A judgment in favor of Plaintiff that Samsung has directly and/or indirectly infringed one or more claims of each of the patents-in-suit;

B. A judgment that Samsung's infringement has been willful and deliberate;

C. An award of damages to which Plaintiff is entitled under 35 U.S.C. § 284 for Samsung's past infringement and any continuing post-verdict infringement up until the date a final judgment is entered, including both compensatory damages and treble damages for willful infringement;

D. Award Plaintiff pre-judgment interest and post-judgment interest on the damages awarded, including pre-judgment interest, pursuant to 35 U.S.C. § 284, from the date of each act of infringement of the patents-in-suit by Samsung to the day a damages judgment is entered, and an award of post-judgment interest, pursuant to 28 U.S.C. § 1961, continuing until such judgment is paid, at the maximum rate allowed by law;

E. A judgment and order finding this to be an exceptional case and requiring Samsung to pay the costs of this action (including all disbursements) and attorneys' fees, pursuant to 35 U.S.C. § 285;

F. Order an accounting for damages;

G. A judgment and order requiring Samsung pay to Plaintiff its actual damages in an amount sufficient to compensate Plaintiff for Samsung's infringement of the patents-in-suit until such time as Samsung ceases its infringing conduct, including supplemental damages post-verdict;

H. A judgment and order requiring Samsung pay to Plaintiff compulsory ongoing licensing fees for any infringement of the patents-in-suit for which an injunction does not issue, as determined by the Court in equity; and

I. Such other and further relief in law or in equity to which Plaintiff may be justly entitled.

Dated: April 11, 2023

Respectfully submitted,

MCKOOL SMITH, P.C.

/s/ *Steven J. Pollinger*
Steven J. Pollinger (SBN 24011919)
spollinger@mckoolsmith.com
George T. Fishback (SBN 24120823)
gfishback@mckoolsmith.com
303 Colorado St., Suite 2100
Austin, TX 78701
Telephone: (512) 692-8700
Facsimile: (512) 692-8744

Sam F. Baxter (SBN 01938000)
sbaxter@mckoolsmith.com
Jennifer L. Truelove (SBN 24012906)
jtruelove@mckoolsmith.com
104 East Houston, Suite 300
Marshall, TX 75670
Telephone: (903) 923-9000
Facsimile: (903) 923-9099

Ryan McBeth (SBN 24078955)
rmcbeth@mckoolsmith.com
600 Travis St., Suite 7000
Houston, TX 77002
Telephone: (713) 485-7300
Facsimile: (713) 485-7344

ATTORNEYS FOR PLAINTIFF MOJO MOBILITY INC.

CERTIFICATE OF SERVICE

I hereby certify that a true and correct copy of the above and foregoing document has been served on all counsel of record by filing via the Court's CM/ECF system on April 11, 2023.

/s/ Steven J. Pollinger
Steven J. Pollinger