128-bit Read-only IDIC® for RF Identification

e5530

Features

- Low-power, Low-voltage CMOS
- Rectifier, Voltage Limiter, Clock Extraction On-chip (No Battery)
- Small Size
- Factory Laser Programmable ROM
- Operating Temperature Range -40°C to +125°C
- Radio Frequency (RF): 100 kHz to 450 kHz
- Transmission options
  - Code Length: 128, 96, 64, 32 bits
  - Bitrate [bit/s]: RF/8, RF/16, RF/32, RF/40, RF/50, RF/64, RF/80, RF/100, RF/128
  - Modulation: FSK, PSK, BIPH, Manchester, BIPH-FSK
- FDX-B Compatible Coding Possible (ISO 11784/ ISO 11785)

Figure 1. Application

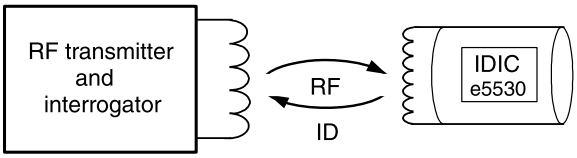

Description

The e5530 is part of a closed coupled identification system. It receives power from an RF transmitter which is coupled inductively to the IDIC®. The frequency is typically 100 kHz to 450 kHz. Receiving RF, the IDIC® responds with a data stream by damping the incoming RF via an internal load. This damping-in-turn can be detected by the interrogator. The identifying data are stored in a 128-bit PROM on the e5530, realized as an array of laser-programmable fuses. The logic block diagram for the e5530 is shown in figure 2. The data are output bit-serially as a code of length 128, 96, 64 or 32 bits. The chips are factory-programmed with a unique code.

Figure 2. Block Diagram

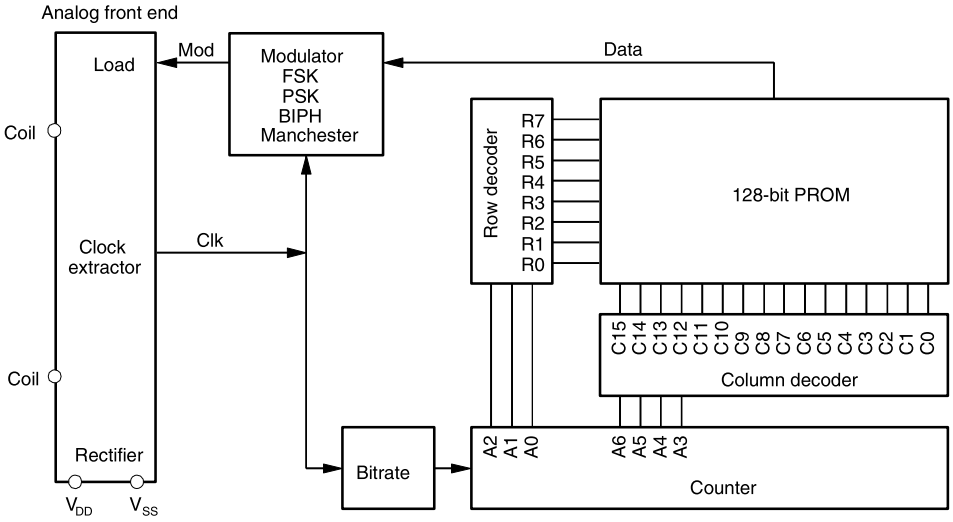

Rev. 4508B–RFID–02/02

SAMSUNG EXHIBIT 1043

Chip Dimensions

Figure 3. Chip Size

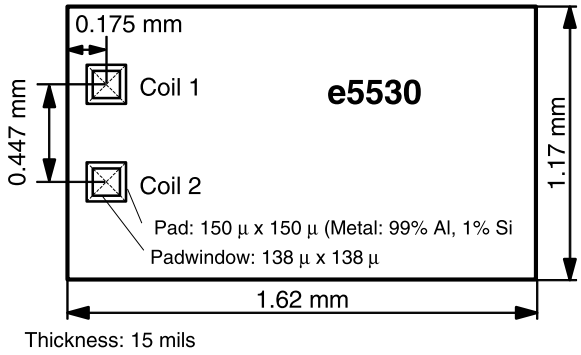

Figure 4. Pinning SO8

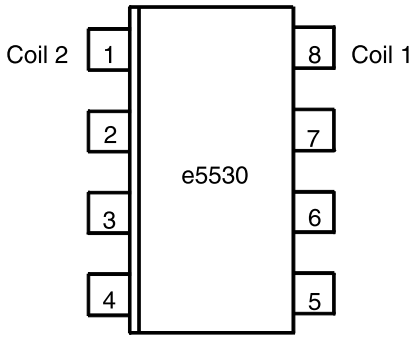

Note: Pins 2 to 7 have to be open. They are not specified for applications

Name	Pad Window	Function
Coil1	138 × 138 μm^2	1st coil pad
Coil2	138 × 138 μm^2	2nd coil pad

Functional Description

Read Operation

After power up, once the e5530 has detected the incoming RF field, the IC continuously transmits the identification code as long as the RF signal is applied. The transition from the last bit to bit 1 of the next sequence occurs without interruption. Data is transmitted by damping the incoming RF signal by an internal load. These load changes are detected by the reader station.

Different kinds of modulation and bitrates are optionally available.

Rectifier

For internal power supply, an on-chip bridge rectifier is used which consists of two diodes and two n-channel transistors. A Zener diode, which protects the circuit against overvoltage on the coil inputs, and a smoothing capacitor for the internal supply are also provided.

Damping Load

Incoming RF will be damped by the power consumption of the IC itself and by an internal load, which is controlled by the modulator. The loads are p-channel transistors connected between V_{DD} and the coil inputs.

The IDIC includes mask options for the load circuit: single-side, double-side and alternate-side modulation.

There are four modulation methods available which can be selected by fuses. The corresponding timing diagram is shown in Figure 5.

FSK Modulation

Logical data “1” and “0” are represented as two different frequencies of damping. The frequency for “1” is RF divided by 10, a “0” divides RF by 8.

PSK Modulation

The external coil is damped with a carrier frequency of RF/2. A logical “1” causes (at the end of the bit period) a 180° phase shift on the carrier frequency, while a logical “0” causes no phase shift.

Biphase Modulation

Logical “1” produces a signal which is the same as the internal bitclock. A logical “0” produces no signal change in the middle of the bit period.

Manchester Modulation

A logical “1” causes a rising edge in the middle of a bit period (i.e., switch damping off), while a logical “0” causes a falling edge (i.e., switch damping on).

A combination of Biphase- and FSK-modulation is also optionally available. The available combinations between the modulation types and the bitrates are shown in Table 1 “Transmission Options”.

Table 1. Transmission Options

Modulation	Carrier Frequency (CF)	Bitrate [bit/s]
FSK	RF/8, RF/10	RF/32, RF/40, RF/50, RF/64, RF/80, RF/100, RF/128
PSK	RF/2	CF/4, 8, 16, 32
Biphase		RF/8, RF/16, RF/32, RF/64, RF/100, RF/128
Manchester		RF/8, RF/16, RF/32, RF/64, RF/100, RF/128

Figure 5. Timing Diagram for Modulation Options

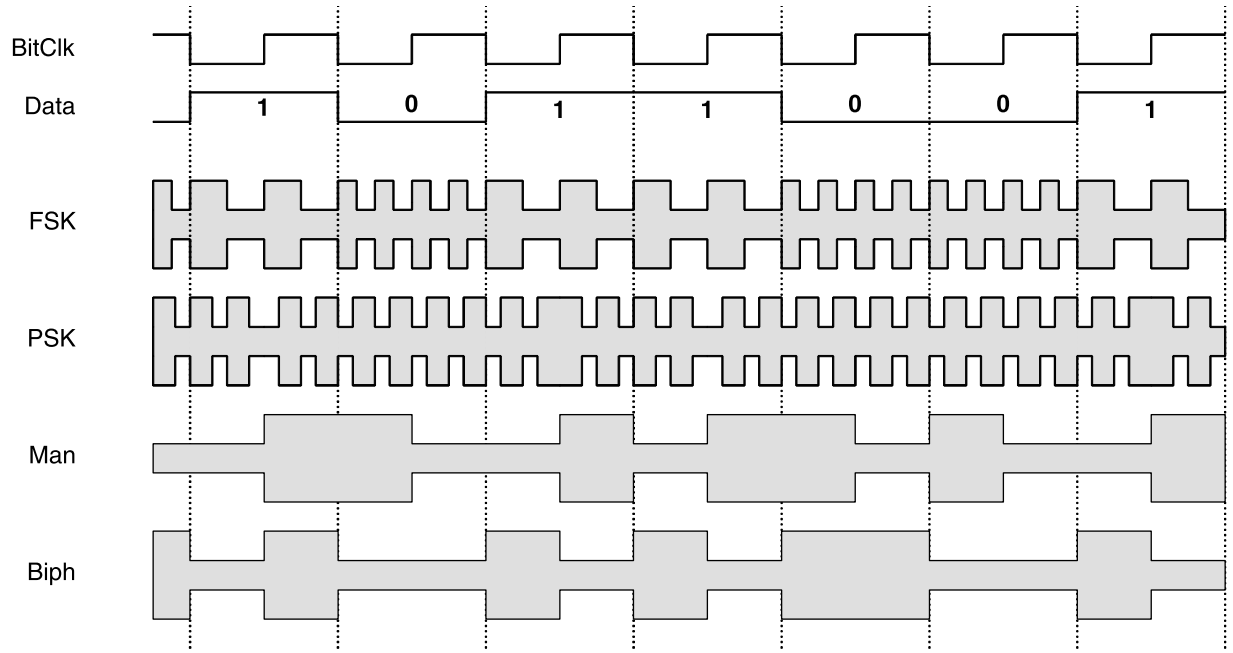

Reading Distances

The e5530 is able to operate from very weak fields. Nevertheless, there are some general rules which influence the achievable reading distance.

- Best results are accomplished when the transponder points towards the reader coil.
- The transponder should not be embedded in metal, which will reduce the applicable magnetic field and thus the reading distance.
- The strength of the generated magnetic field and the sensitivity of the demodulator are the most important factors for a good reading distance.

Figure 6. Example for a 64-bit Code

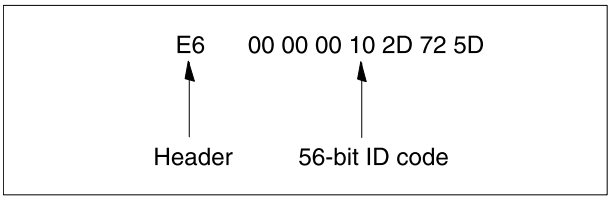

The identification code is transmitted continously. After the RF field is applied, the e5530H-232 starts with the first bit (MSB) of the header byte 'E6hex' ('1110 0110'), followed by a unique 56-bit serial number. No checksum is included in this sample code.

Pulsing the RF field may reduce the synchronization task as the first byte transmitted is known already (i.e., E6hex). This is even feasible, if the first bit may be lost due to reader synchronization problems.

Customer ID Code Selection

In general the customer may choose any ID code suitable to his application. To avoid code duplication, Atmel will define a fixed header – i.e, the first 8 bits of the code – for each customer.

Modes of Operation – Options

For any new product variant, the customer has to select the following operation options which are configured in the laser ROM as well:

- Bitrate, which is defined as field clocks per bit (e.g., RF/40 = 125 kHz/40 = 3.125 kBit/s) (see table Table 1 "Transmission Options")
- Modulation method (see Figure 5)
- Code length: 32, 64, 96 or 128 bits

For programming the ID code into the laser ROM, one of the following data has to be supplied:

- ID code algorithm which is implemented in Atmel's code management software (Atmel will generate the codes as requested)
- Customer generated ID codes on floppy disk or per email/ftp.

The format has to comply to the following rules:

  - The ID code file is a plain ASCII text file.
  - The code files should be compressed. Please make self extracting files.
  - The code files are used in alphabetical order of their file names (including letters and numbers). Used - i.e. programmed - code files are discarded.
  - Each line of the code file must contain one ID code for one IC.
  - The code is in hexadecimal format. The code may contain spaces for better readability.

- The code line is exactly as long as the selected code length (e.g. 64 bits 16 hex numbers).
- The line must end with a carriage return.
- The first 8 bits are fixed, this is the unique customer header which is defined by Atmel.
- Each hexadecimal code entry must be preceded by a decimal serial number. Serial number and code must be separated by a space.
- The serial number has to be unique and is up-counting to avoid double programming.
- The series numbers of two consecutive files (file name!) has to count also for proper linking.

Figure 7. Example of Two Code Files with Header = E6 and 64-bit Code Length

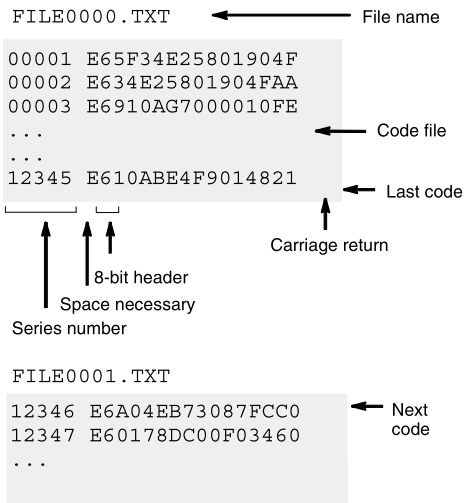

Absolute Maximum Ratings

Parameters	Symbol	Value	Unit
Maximum current into Coil1 and Coil2	I_{coil}	10	mA
Maximum power dissipation (dice)	P_{tot}	100	mW (1)
Maximum ambient air temperature with voltage applied	T_{amb}	-40 to +125	°C
Storage temperature	T_{stg}	-65 to +200	°C

Note: 1. Free-air condition. Time of application: 1 s
Stresses above those listed under 'Absolute Maximum Ratings' may cause permanent damage to the device. Functional operation of the device at these conditions is not implied.

Electrical Characteristics

T_{amb} = 25°C, reference terminal is V_{DD}, operating voltage V_{DD} - V_{SS} = 3 V DC, unless otherwise specified

No.	Parameters	Test Conditions	Symbol	Min.	Typ.	Max.	Unit
1	Operating voltage	Condition for logic test	V_{SS}	-1.5		-5.0	V
2	Operating temperature		T_{amb}	-40		125	°C
3	Input frequency (RF)		f_{CLK}	100		450	kHz
4	Operating current	f_{CLK} = 125 kHz, V_{SS} = -2 V	I_{CC}		3 (1)		mA
5	Clamp voltage	I = 4 mA	V_{CL}	6.7		10	V

Note: 1. Typical parameters represent the statistical mean values

Figure 8. Measurement Setup for I_{DD}

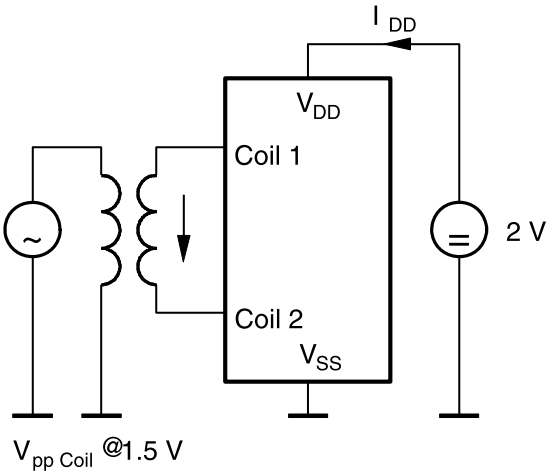

Figure 9. Simplified Damping Circuit

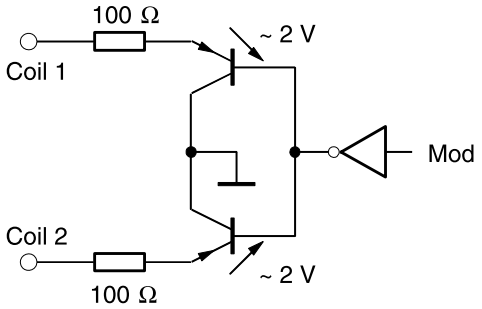

Application Example

Figure 10. Typical Application Circuit

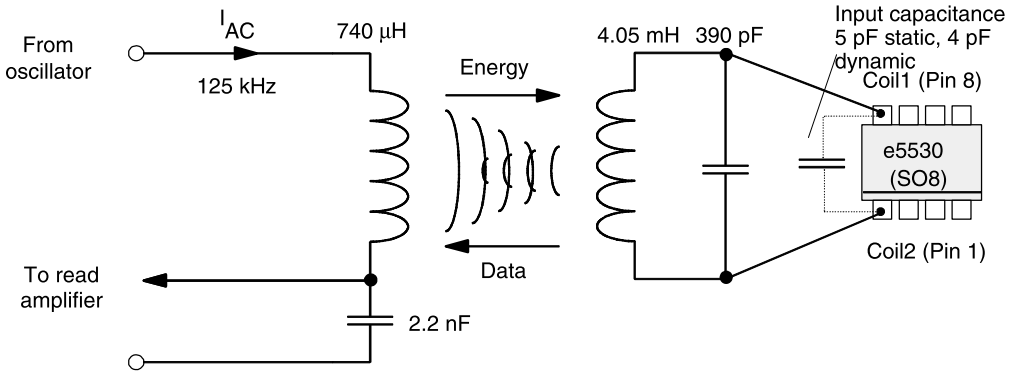

Ordering Information

Extended Type Number	Package	Modulation	Data Rate	Configuration	Checksum	Header	ID Code	SPQ (Minimum Volume)	Minimum Order Volume
e5530H-232-DOW e5530H-232-DIT e5530H-232-S8	DOW DIT SO8	Manchester	RF/32	64-bit	no checksum	E6	fixed and unique code	10 kpcs 10 kpcs 1120	10 kpcs 10 kpcs 1120
e5530H-zzz-DOW (1) e5530H-zzz-DIT (1) e5530H-zzz-S8 (1)	DOW DIT SO8	defined by customer							> 600 kpcs p.a. > 600 kpcs p.a. > 400 kpcs p.a.

Note: 1. 1) Definition of customized part number basing on orders for first year volume (300 kpcs)
2) Definition of header, ID code, checksum etc. according to customers data base
3) 5.000 US$ initial cost for customer specific laser-fusing
4) Lead time 3 month
5) Low volume customized applications may be covered by TK5551-PP programming.
With identical features of TK5530H-zzz-PP possible

Order Code

The full order code for the e5530is **e5530H-zzz-pkg** or **e5530G-zzz-pkg**, where zzz is a customer specific number defined by Atmel. **pkg** (package) defines the delivery form:

- DOW factory programmed, tested unsawn, backlapped (15 mils) wafers
- DIT cutted chips in wafflepack (**D**ice **I**n **T**ray)
- S8 SO8-packaged parts

Samples: Atmel supplies e5530 samples, which are set to Manchester modulation at RF/32 with a 64-bit ID code (order code: e5530H-232 S8)

Package Information

Package SO8
Dimensions in mm

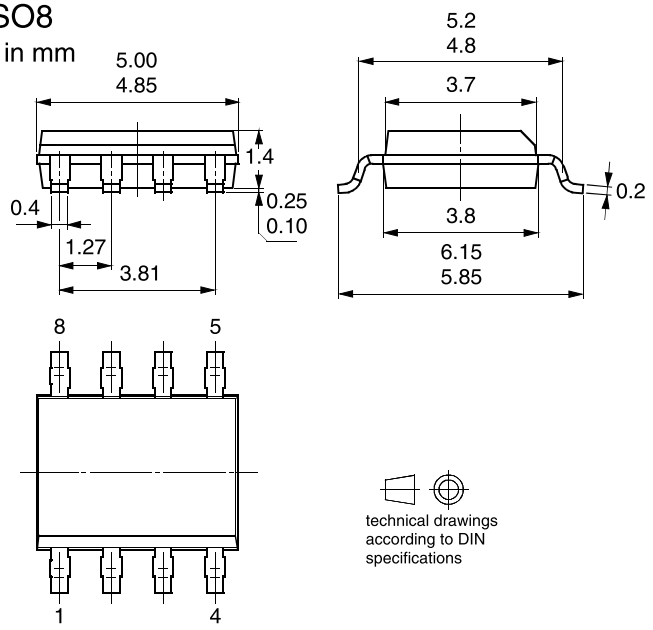

Atmel Headquarters

Corporate Headquarters
2325 Orchard Parkway
San Jose, CA 95131
TEL 1(408) 441-0311
FAX 1(408) 487-2600

Europe
Atmel SarL
Route des Arsenaux 41
Casa Postale 80
CH-1705 Fribourg
Switzerland
TEL (41) 26-426-5555
FAX (41) 26-426-5500

Asia
Atmel Asia, Ltd.
Room 1219
Chinachem Golden Plaza
77 Mody Road Tsimhatsui
East Kowloon
Hong Kong
TEL (852) 2721-9778
FAX (852) 2722-1369

Japan
Atmel Japan K.K.
9F, Tonetsu Shinkawa Bldg.
1-24-8 Shinkawa
Chuo-ku, Tokyo 104-0033
Japan
TEL (81) 3-3523-3551
FAX (81) 3-3523-7581

Atmel Operations

Memory
Atmel Corporate
2325 Orchard Parkway
San Jose, CA 95131
TEL 1(408) 436-4270
FAX 1(408) 436-4314

Microcontrollers
Atmel Corporate
2325 Orchard Parkway
San Jose, CA 95131
TEL 1(408) 436-4270
FAX 1(408) 436-4314

Atmel Nantes
La Chantrerie
BP 70602
44306 Nantes Cedex 3, France
TEL (33) 2-40-18-18-18
FAX (33) 2-40-18-19-60

ASIC/ASSP/Smart Cards
Atmel Rousset
Zone Industrielle
13106 Rousset Cedex, France
TEL (33) 4-42-53-60-00
FAX (33) 4-42-53-60-01

Atmel Colorado Springs
1150 East Cheyenne Mtn. Blvd.
Colorado Springs, CO 80906
TEL 1(719) 576-3300
FAX 1(719) 540-1759

Atmel Smart Card ICs
Scottish Enterprise Technology Park
Maxwell Building
East Kilbride G75 0QR, Scotland
TEL (44) 1355-803-000
FAX (44) 1355-242-743

RF/Automotive
Atmel Heilbronn
Theresienstrasse 2
Postfach 3535
74025 Heilbronn, Germany
TEL (49) 71-31-67-0
FAX (49) 71-31-67-2340

Atmel Colorado Springs
1150 East Cheyenne Mtn. Blvd.
Colorado Springs, CO 80906
TEL 1(719) 576-3300
FAX 1(719) 540-1759

Biometrics/Imaging/Hi-Rel MPU/ High Speed Converters/RF Datacom
Atmel Grenoble
Avenue de Rochepleine
BP 123
38521 Saint-Egreve Cedex, France
TEL (33) 4-76-58-30-00
FAX (33) 4-76-58-34-80

e-mail
literature@atmel.com

Web Site
http://www.atmel.com

© Atmel Corporation 2002.
Atmel Corporation makes no warranty for the use of its products, other than those expressly contained in the Company's standard warranty which is detailed in Atmel's Terms and Conditions located on the Company's web site. The Company assumes no responsibility for any errors which may appear in this document, reserves the right to change devices or specifications detailed herein at any time without notice, and does not make any commitment to update the information contained herein. No licenses to patents or other intellectual property of Atmel are granted by the Company in connection with the sale of Atmel products, expressly or by implication. Atmel's products are not authorized for use as critical components in life support devices or systems.

Atmel® and IDIC® are the registered trademarks of Atmel.

Other terms and product names may be the trademarks of others.

Printed on recycled paper.

4508B–RFID–02/02 xM