UNITED STATES PATENT AND TRADEMARK OFFICE

BEFORE THE PATENT TRIAL AND APPEAL BOARD

SAMSUNG ELECTRONICS CO., LTD.
Petitioner

v.

MOJO MOBILITY INC.
Patent Owner

Patent No. 7,948,208

PETITION FOR *INTER PARTES* REVIEW
OF U.S. PATENT NO. 7,948,208

TABLE OF CONTENTS

I. INTRODUCTION 1

II. MANDATORY NOTICES 1

III. PAYMENT OF FEES 2

IV. GROUNDS FOR STANDING 2

V. PRECISE RELIEF REQUESTED AND GROUNDS 2

VI. LEVEL OF ORDINARY SKILL 3

VII. THE '208 PATENT 4

VIII. CLAIM CONSTRUCTION 5

IX. DETAILED EXPLANATION OF GROUNDS 7

A. Ground 1: Claims 1 and 18 are obvious over *Nakamura* in view of *Berghegger* 7

1. Claim 1 7

2. Claim 18 56

B. Ground 2: Claims 1 and 18 are obvious over *Nakamura*, *Berghegger*, and *Hsu* 58

C. Ground 3: Claims 1 and 18 are obvious over *Nakamura*, *Berghegger*, and *Odendaal* 66

D. Ground 4: Claims 1 and 18 are obvious over *Nakamura*, *Berghegger*, *Odendaal*, and *Hsu* 76

E. Ground 5: Claims 1 and 18 are obvious over *Nakamura*, *Berghegger*, and *WangII* 77

F. Ground 6: Claims 1 and 18 are obvious over *Nakamura*, *Berghegger*, *WangII*, *Odendaal*, and *Hsu* 80

X. DISCRETIONARY DENIAL IS NOT APPROPRIATE 82

XI. CONCLUSION.....87

LIST OF EXHIBITS

Ex. 1001	U.S. Patent No. 7,948,208
Ex. 1002	Declaration of R. Jacob Baker, Ph.D., P.E.
Ex. 1003	Curriculum Vitae of R. Jacob Baker, Ph.D., P.E.
Ex. 1004	Prosecution History of U.S. Patent No. 7,948,208
Ex. 1005	U.S. Patent Application Publication No. 2005/0068019 ("*Nakamura*")
Ex. 1006	U.S. Patent No. 6,912,137 ("*Berghegger*")
Ex. 1007	U.S. Patent Application Publication No. 2006/0202665 ("*Hsu*")
Ex. 1008	U.S. Patent No. 6,960,968 ("*Odendaal*")
Ex. 1009	U.S. Patent No. 6,489,745 ("*Koreis*")
Ex. 1010	U.S. Patent No. 6,366,817 ("*Kung*")
Ex. 1011	Physics, Henry Semat et al., Rinehart & Co., Inc., 1958, Chapters 29-32 ("*Semat*")
Ex. 1012	U.S. Patent No. 5,702,431 ("*Wang*")
Ex. 1013	International Patent Application Publication No. WO1996040367 ("*WangII*")
Ex. 1014	Handbook of Radio and Wireless Technology, Stan Gibilisco, McGraw-Hill, 1999 ("*Gibilisco*")
Ex. 1015	U.S. Patent No. 4,942,352 ("*Sano*")
Ex. 1016	Fundamentals of Electric Circuits, 2d., Charles Alexander et al., McGraw-Hill, 2004 ("*Alexander*")
Ex. 1017	International Patent Application Publication No. WO1994/18683 ("*Koehler*")

Ex. 1018	Mojo Mobility's Infringement Chart for U.S. Patent No. 7,948,208 (Ex. 1) accompanying Mojo Mobility's Infringement Contentions in *Mojo Mobility Inc. v. Samsung Elecs. Co., Ltd.*, No. 2:22-cv-00398 (E.D. Tex.) (February 28, 2023)
Ex. 1019	RESERVED
Ex. 1020	U.S. Patent Application Publication No. 2007/0109708 ("*Hussman*")
Ex. 1021	U.S. Patent Application Publication No. 2003/0210106 ("*Cheng*")
Ex. 1022	Mojo Mobility's Infringement Contentions in *Mojo Mobility Inc. v. Samsung Elecs. Co., Ltd.*, No. 2:22-cv-00398 (E.D. Tex.) (February 28, 2023)
Ex. 1023	U.S. Patent Application Publication No. 2004/0201988 ("*Allen*")
Ex. 1024	U.S. Patent No. 7,378,817 ("*Calhoon*")
Ex. 1025	International Patent Application Publication No. WO2003/096361 ("*Cheng*")
Ex. 1026	International Patent Application Publication No. WO2004/038888 ("*ChengII*")
Ex. 1027	Spiral Inductor Design for Quality Factor, Sang-Gug Lee et al., Journal of Semiconductor Technology and Science, Vol. 2. No. 1, March 2002 ("*Lee*")
Ex. 1028	U.S. Patent Application Publication No. 2001/0055207 ("*Barbeau*")
Ex. 1029	AN710 Antenna Circuit Design for RFID Applications
Ex. 1030	U.S. Patent No. 6,606,247 ("*Credelle*")
Ex. 1031	Memorandum from Director Vidal (June 21, 2022)
Ex. 1032	Federal Court Management Statistics (December 2022)
Ex. 1033	Docket Control Order of March 28, 2023, *Mojo Mobility Inc. v. Samsung Elecs. Co., Ltd.*, No. 2:22-cv-00398 (E.D. Tex.)

Ex. 1034	U.S. Patent Application Publication No. 2005/0127868 ("*CalhoonII*")
Ex. 1035	Watson, J., Mastering Electronics, Third Ed., McGraw-Hill, Inc. (1990) ("*Watson*")
Ex. 1036	Sedra, A., *et al.*, Microelectronic Circuits, Fourth Ed., Oxford University Press (1998) ("*Sedra*")
Ex. 1037	GB Patent Application Publication No. 2202414 ("*Logan*")
Ex. 1038	U.S. Patent No. 7,226,442 ("*Sheppard*")
Ex. 1039	Amended Complaint, *Mojo Mobility Inc. v. Samsung Elecs. Co., Ltd.*, No. 2:22-cv-00398 (E.D. Tex. April 11, 2023)
Ex. 1040	U.S. Patent Application Publication No. 2006/0145660A1 ("*Black*")
Ex. 1041	U.S. Patent No. 5,780,992 ("*Beard*")
Ex. 1042	U.S. Patent Application Publication No. 2007/0145830A1 ("*Lee*")
Ex. 1043	ATMEL e5530 Data Sheet (2002)
Ex. 1044	U.S. Patent No. 6,459,383 ("*Delatorre*")
Ex. 1045	International Patent Application Publication No. WO1999050806A1 ("*Cunningham*")
Ex. 1046	International Patent Application Publication No. WO2004026129A1 ("*Due-Hansen*")

I. INTRODUCTION

Samsung Electronics Co., Ltd. ("Petitioner") requests *inter partes* review of claims 1 and 18 ("challenged claims") of U.S. Patent No. 7,948,208 ("the '208 patent") (Ex. 1001) assigned to Mojo Mobility Inc. ("PO"). For the reasons below, claims 1 and 18 should be found unpatentable and canceled.

II. MANDATORY NOTICES

Real Parties-in-Interest: Petitioner identifies the following as the real parties-in-interest: Samsung Electronics Co., Ltd. and Samsung Electronics America, Inc.

Related Matter: The '208 patent is at issue in the following matter(s):

- *Mojo Mobility Inc. v. Samsung Electronics Co., Ltd.*, No. 2-22-cv-00398 (E.D. Tex.) (asserting the '208 patent and also U.S. Patent Nos. 9,577,440, 11,292,349, 11,316,371, 11,201,500, 11,342,777, and 11,462,942) ("Texas Litigation") (Exs. 1022, 1039.)

The '208 patent claims priority to three provisional applications (U.S. Provisional Application Nos. 60/810,262, filed June 1, 2006; 60/810,298 filed June 1, 2006; and 60/868,674, filed December 5, 2006). (Ex. 1001, Cover.)

Counsel and Service Information: Lead counsel: Joseph E. Palys (Reg. No. 46,508), and Backup counsel are (1) Naveen Modi (Reg. No. 46,224), and (2)

Howard Herr (*pro hac vice* admission to be requested). Service information is Paul Hastings LLP, 2050 M St., Washington, D.C., 20036, Tel.: 202.551.1700, Fax: 202.551.1705, email: PH-Samsung-MojoMobility-IPR@paulhastings.com. Petitioner consents to electronic service.

III. PAYMENT OF FEES

The PTO is authorized to charge any fees due during this proceeding to Deposit Account No. 50-2613.

IV. GROUNDS FOR STANDING

Petitioner certifies that the '208 patent is available for review and Petitioner is not barred or estopped from requesting review on the grounds identified herein.

V. PRECISE RELIEF REQUESTED AND GROUNDS

Claims 1 and 18 should be canceled as unpatentable based on the following grounds:

Ground 1: Claims 1 and 18 are unpatentable under pre-AIA 35 U.S.C. § 103(a) as being obvious over *Nakamura* and *Berghegger*;

Ground 2: Claims 1 and 18 are unpatentable under 35 U.S.C. § 103(a) as being obvious over *Nakamura*, *Berghegger*, and *Hsu*;

Ground 3: Claims 1 and 18 are unpatentable under § 103(a) as being obvious over *Nakamura*, *Berghegger*, and *Odendaal*;

Ground 4: Claims 1 and 18 are unpatentable under § 103(a) as being obvious over *Nakamura*, *Berghegger*, *Odendaal*, and *Hsu*;

Ground 5: Claims 1 and 18 are unpatentable under § 103(a) as being obvious over *Nakamura*, *Berghegger*, and *WangII*; and

Ground 6: Claims 1 and 18 are unpatentable under § 103(a) as being obvious over *Nakamura*, *Berghegger*, *WangII*, *Odendaal*, and *Hsu*.

PO has stated in the Texas Litigation that the priority date for claim 1 of the '208 patent is at least 12/5/2006 (and possibly three months earlier). (Ex. 1022, 6, 8.) For this proceeding, and without conceding entitlement to such a date, Petitioner assumes that is the effective date for the challenged claims.

Nakamura published 3/31/2005, *Berghegger* published 6/28/2005, and *WangII* published 12/19/1996, and thus each qualifies as prior art under §102(b). *Hsu* was filed 5/13/2005 and published 9/14/2006, thus qualifying as prior art at least under §§102(b) and/or 102(e). *Odendaal* was filed 6/26/2002 and issued 11/1/2005, thus qualifying as prior art under §§102(b) and/or 102(e). None of these references were considered during prosecution. (Ex. 1004.)

VI. LEVEL OF ORDINARY SKILL

A person of ordinary skill in the art as of the claimed priority date of the '208 patent ("POSITA") would have had at least master's degree in electrical engineering,

or a similar discipline, and two or more years of experience with wireless charging systems, including, for example, inductive power transfer systems. (Ex. 1002, ¶¶20-21; *id*., ¶¶22-64.)[1] More education can supplement practical experience and vice versa. (*Id.*)

VII. THE '208 PATENT

The '208 patent discloses a charging system with a base unit comprising one or more primary coils for charging/powering a mobile device with a receiver and secondary coil. (Ex. 1001, Abstract, 3:20-49; Ex. 1002, ¶66.)

During prosecution, in response to repeated prior art rejections by the examiner, the applicant continually added new features to now-issued claim 1, attempting to find something allowable. (*See, e.g.*, Ex. 1004, (1st OA: 721-724, Amendment: 685, 692-694), (2nd OA: 621-628, Amendment: 602-603, 611-613), (3rd OA: 573-580, Amendment: 538-540, 548-552).) Only after adding the selective switching features using "switching circuit[s]" and the "capacitive or other component" features now recited in *e.g.*, limitations 1(c)-1(d), 1(h), did the examiner

[1] Petitioner submits the declaration of R. Jacob Baker, Ph.D., P.E. (Ex. 1002), an expert in the field of the '208 patent. (Ex. 1002, ¶¶1-14; Ex. 1003.)

allow the claim. (*Id.*, 498-508.)[2] However, as explained below, the features identified by the examiner, as with the others in the challenged claims, are compilation of conventional technologies/features known in the art. (*Infra* §IX; Ex. 1002, ¶20-279; *see also* Exs. 1005-1030, 1034-1038, 1040-1042.). *See In re Gorman*, 933 F.2d 982, 986 (Fed. Cir. 1991) ("The criterion ... is not the number of references, but what they would have meant to a person of ordinary skill in the field of the invention.").

VIII. CLAIM CONSTRUCTION

The Board only construes the claims when necessary to resolve the underlying controversy. *Toyota Motor Corp. v. Cellport Systems, Inc.*, IPR2015-00633, Paper No. 11 at 16 (Aug. 14, 2015) (citing *Vivid Techs., Inc. v. Am. Sci. & Eng'g, Inc.*, 200 F.3d 795, 803 (Fed. Cir. 1999)). For purposes of this proceeding, Petitioner believes

[2] The applicant followed the allowance with multiple information disclosure statements that elicited similar notices of allowances. (Ex. 1004, 36-39, 72-80, 287-290, 294-298, 287-290.)

that no special constructions are necessary to assess whether the challenged claims are unpatentable over the asserted prior art.[3] (Ex. 1002, ¶67.)

[3] Petitioner reserves all rights to raise claim construction and other arguments, including challenges under 35 U.S.C. §112, in district court as relevant to those proceedings. *See, e.g.*, *Target Corp. v. Proxicom Wireless, LLC*, IPR2020-00904, Paper 11 at 11-13 (Nov. 10, 2020). A comparison of the claims to any accused products in litigation may raise controversies that are not presented here given the similarities between the references and the patent. Petitioner does not concede any term/limitation are definite and/or has sufficient specification support, and thus reserves the right to address any associated §112 issues in other proceedings.

IX. DETAILED EXPLANATION OF GROUNDS[4]

A. Ground 1: Claims 1 and 18 are obvious over *Nakamura* in view of *Berghegger*

1. Claim 1

a) A charger system for use with a mobile, electronic, or other device and/or battery, battery door, or skin for use with the device, for charging and/or powering the device and/or battery inductively, comprising:

To the extent limiting, *Nakamura* discloses this limitation. (Ex. 1002, ¶¶69-82, 100-112; *infra* §§IX.A.1(b)-(k).) *Nakamura* discloses "a power supply system" (*e.g.*, "**charger system**") that includes a power transmission apparatus (*e.g.*, "**base unit**") that inductively "supplies power to mobile electronic equipment such as portable telephones, notebook personal computers…" (*e.g.*, "**mobile, electronic, or other device and/or battery, battery door, or skin for use with the device**" (hereinafter "**device**" or "**battery**"). (Ex. 1005, ¶¶0003, 0016-0017, 0062, 0063 ("[t]hough not shown, any type of electronic equipment equipped with a battery,

[4] References to prior art exhibits other than the asserted art identified in each ground are to demonstrate/support a POSITA's state-of-art knowledge at the time, as applicable.

such as a digital camera, a camcorder, a PDA, or the like, can be charged similarly"), FIGS. 1A-2B (some below), 0064; Ex. 1002, ¶¶101-103.)

FIG. 1B

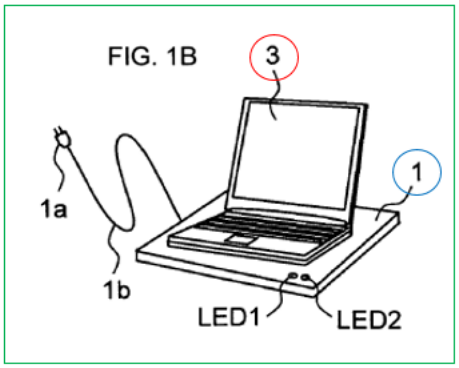

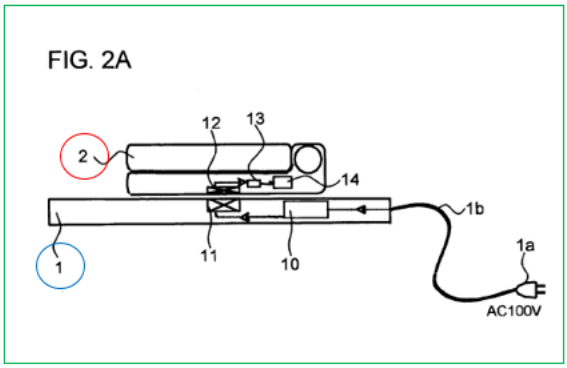

The apparatus ("**base unit**") includes a "primary side circuit" that provides a pulsed voltage to a "primary side coil" and the power reception equipment ("**device**") includes a secondary side coil "magnetically coupled to the primary side coil," such that the apparatus inductively supplies power to different types of "device(s)" ("**for charging and/or powering the device and/or battery inductively**"). (Ex. 1005, ¶0018-0019; *id.*, ¶0065 ("voltage is **induced**…by magnetic coupling").) The apparatus may include a single primary coil (FIG. 3) or a plurality of coils (FIG. 5) that can deliver different levels of power/voltage to the device. (*Id.*) FIG. 5 (annotated below) illustrates a configuration ("**charger**

system") including apparatus 1 ("**base unit**") and mobile device 2 ("**device**") for charging/powering the device. (Ex. 1002, ¶¶102, 104-106.)

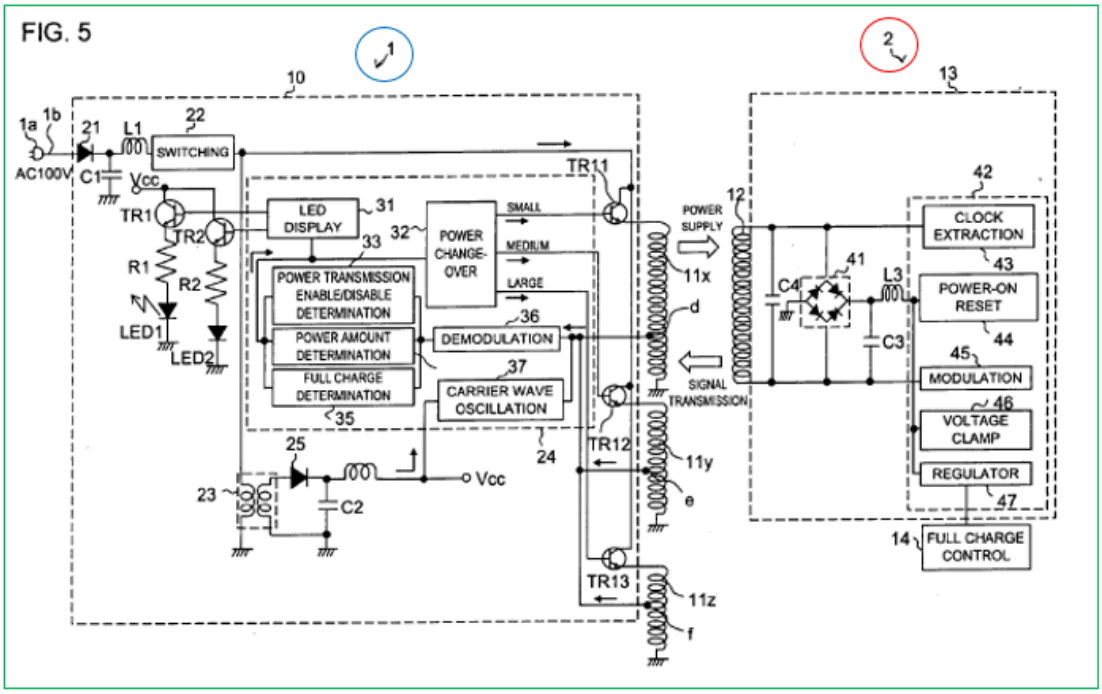

The FIG. 5 configuration performs similar functionalities as the FIG. 3 configuration in accordance with the power transfer operations disclosed in *Nakamura*. (Ex. 1005, ¶0090., FIGS. 3-5, ¶¶0067-0075, 0091-0101; Ex. 1002, ¶¶106-107.) Indeed, as discussed below (§§IX.A.1(b)-(k)) the operations/components regarding FIG. 3 (including the components in circuits 10 and 13, switches TR11/TR12/TR13, etc.) and FIG. 4, are applicable to the FIG. 5 configuration. (Ex. 1005, FIG. 3, ¶¶0067-

0075, FIG. 4 (below), ¶¶0076-0089, FIG. 5, ¶¶0090 (same symbols and descriptions except a "difference" in use of multiple primary coils 11x/11y/11z), 0091.)

FIG. 4

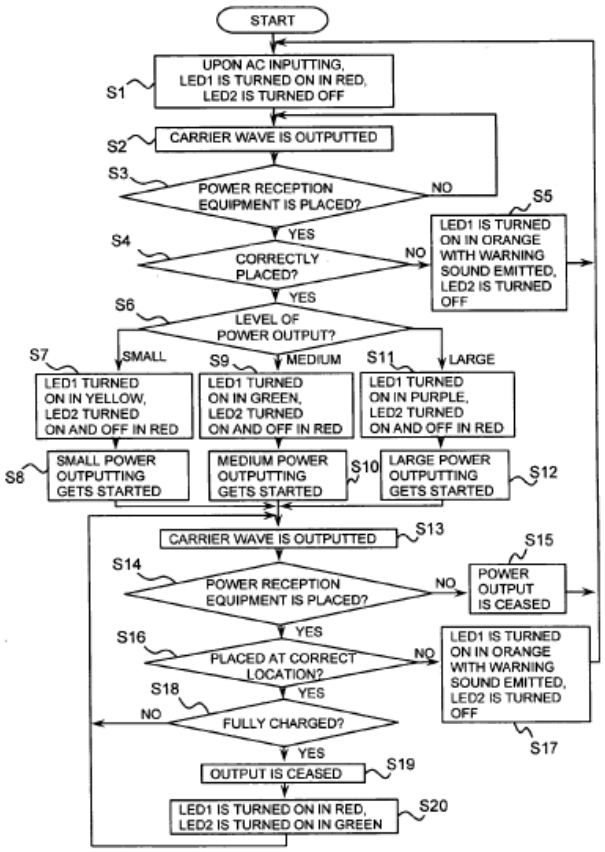

The same is true for other configurations, applications, and related teachings. (*Id.*, *e.g.,* FIGS. 1A-2B, 6, 8-9, 11A-20, 21-25 ¶¶0080-0089, 0092-0094, 0096-0104, 0107-0153; Ex. 1002, ¶¶108-112.) (*See also* §§IX.A.1(b)-(k).) Each such configuration that performs/includes such claimed features/components here/below is an exemplary "charger system."

b) a base unit having a surface, and comprising a

plurality of primary coils arranged behind and parallel to the surface, wherein each of the primary coils is positioned within the base unit, and

Nakamura discloses this limitation. (Ex. 1002, ¶¶113-119.) Apparatus 1 ("**base unit**") in the "**charger system**" has a "**surface**" and a "**plurality of primary coils arranged behind and parallel to the surface**" and can be "**positioned within the base unit**." (§IX.A.1(a); *e.g.*, Ex. 1005, ¶¶0017-0019, 0064-0065.) FIG. 5 shows apparatus 1 ("**base unit**") including three coils (11x/11y/11z) ("**plurality of primary coils**"). (Ex. 1005, ¶¶0090-0091, FIG. 5 (annotated below); Ex. 1002, ¶¶113-114.)

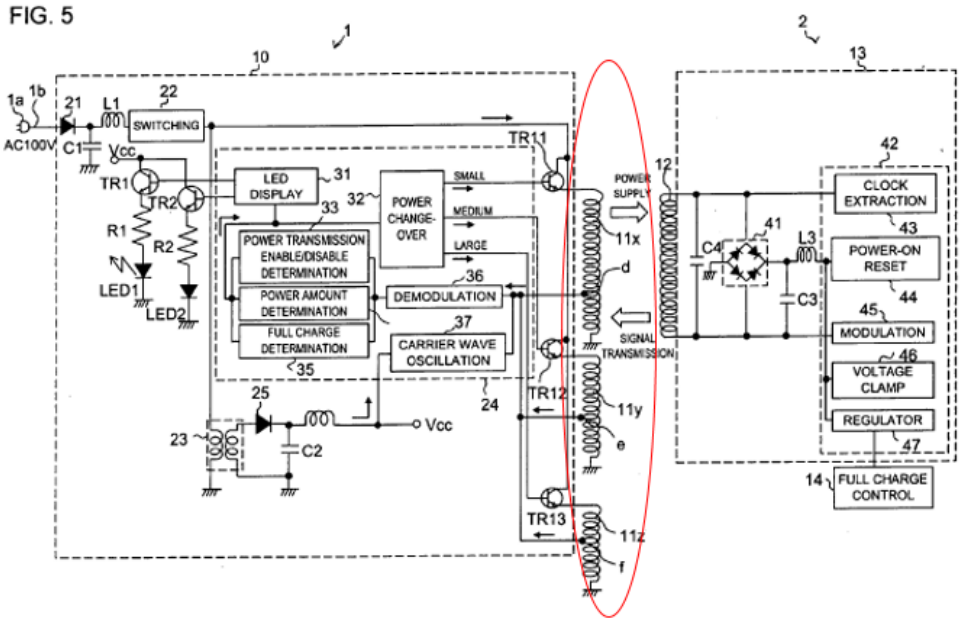

Regarding FIGS. 2A-2B, *Nakamura* explains how primary coil 11 can be positioned within apparatus 1, and arranged behind and parallel (red below) to a

surface (blue below) thereof (Ex. 1005, ¶0064), which (as with other described configurations (§IX.A.1(a))) provides power through magnetic coupling for device 2/3 (Ex. 1005, FIGS. 2A-2B (below); ¶¶0065, 0068-0073, 0076-0088, 0090-0091); Ex. 1002, ¶115.)

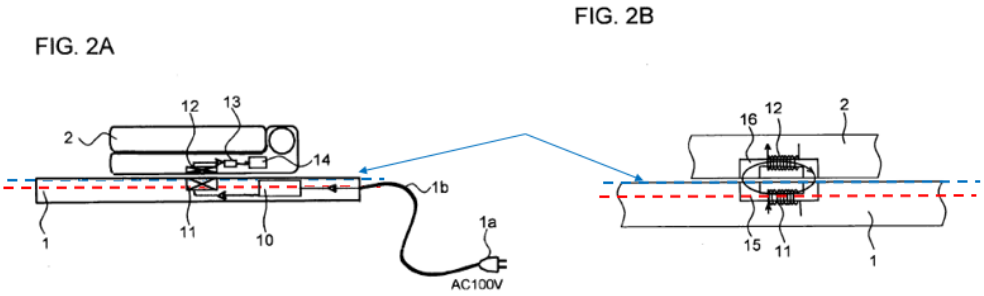

Applications encompassing the multi-primary coil configuration (§IX.A.1(a)) include apparatus 1 embedded in a host (*e.g.*, desk, shelf, locker, holder, dashboard, mat, wall, floor-fabric, ticket dispenser, etc. (Ex. 1005, FIGS. 13A-25, ¶¶0107-0153, 0159.) In such configurations, circuit 10 and primary coil(s) 11 are also embedded/positioned/arranged, or otherwise placed behind a surface of apparatus 1 ("**base unit**"), to allow a present and properly positioned device 2/3 to be charged or powered inductively. (*Id.*; Ex. 1002, ¶¶116-117; §IX.A.1(a).) Further, any such host (*e.g.*, desk, etc.) with an embedded apparatus 1 is another example of a "**base**

unit" having a surface with primary coil(s) being parallel to and within the "**base unit**" surface. (Ex. 1002, ¶117.)[5]

Nakamura's teachings are consistent with claim 1 and the '208 patent, which do not require any particular type of primary coils. (Ex. 1002, ¶118.) For instance, the '208 patent describes PCB/planar-type coils in context of *exemplary* embodiments. (*See e.g.*, Ex. 1001, 4:50-4:35, 4:39-44, 6:26-30, 6:59-62, 7:5-8, 8:10-14, 8:54-57, 9:1-4, 9:28-32, 9:48-50, 14:47-60, 18:62-65, 19:29-48, 21:43-49.) Thus, claim 1 (in context of the '208 patent) does not *require* planar type coils or limits/details the "parallel" nature of such coils as claimed (*e.g.,* Ex. 1001, 2:57-65, 11:30-44, 17:25-47 (discussing "parallel" only in context of magnetic fields, alignment magnet, and circuit configurations)). (Ex. 1002, ¶¶118-119; *infra* §§IX.A.1(c)-(k).)

c) wherein each of the primary coils is associated with a switching circuit in the base unit, which switching circuit is capable of being selectively switched to activate its associated primary coil so that, when an electrical current is passed through that activated primary coil, a magnetic field is generated by that activated primary coil in a direction substantially

[5] *Nakamura*'s disclosures are consistent with discussed conventional configurations. (Ex. 1005, ¶0008 (discussing JP2001-16789's primary coil "installed below a body placement section of the charger"); Ex. 1002, ¶118.)

perpendicular to the surface of the base unit, and,

Nakamura discloses this limitation. (Ex. 1002, ¶¶120-129; §§IX.A.1(a)-(b), IX.A.1(h).) Apparatus 1 includes transistors TR11/TR12/TR13, which provide switching circuits, each respectively associated with a primary coil 11x/11y/11z. (Ex. 1005, ¶¶0090-0091.) "*[O]ne of the transistors is selected* by the power change-over circuit 32 according to the level of power to be transmitted determined from the [information on consumed power] signal [] received from the portable telephone 2." (*Id.*, ¶0091) This allows "a coil for transmitting power [to] be selected, and power required…[to] be transmitted." (*Id.*) Moreover, transistors TR11/TR12/TR13 "may be replaced with different ***switching elements such as MOSFETs, selector switches, or the like***." (*Id.*, ¶¶0070, 0090; Ex. 1002, ¶¶120-122.)

A POSITA would have understood that by applying a pulsed voltage to the activated coil (11x/11y/11z) (which is an inductor), a **current** necessarily passes through the activated coil because voltage/current is included in the pulsed signal. (Ex. 1002, ¶¶123-124; Ex. 1005, ¶¶0065, 0076-0087, 0084 ("when transistor TR11 is turned on, a pulse voltage…is applied across the total length of primary side coil 11 to start power transmission"), 0090-0091.) The activated coil, due to such current flow, generates a **magnetic field** in a direction **substantially perpendicular** to the surface of the apparatus 1 (or host of apparatus 1—§IX.A.1(b)) for

powering/charging device 2/3 (or battery) as described by *Nakamura*. (Ex. 1002, ¶¶125-127.) FIG. 2B (annotated below) discloses a magnetic field (blue below) that is generated by the inductive coupling between coils 11 and 12 that is perpendicular (green) to the surface of apparatus 1.

FIG. 2B

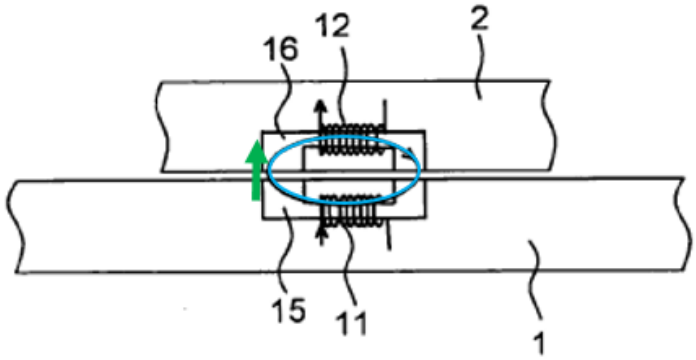

(Ex. 1002, ¶125; Ex. 1005, Abstract, ¶¶0018, 0062, 0065, 0079, 0080-0082 ("highest coupling degree in magnetic coupling" occurs with 0 mm deviations), FIGS. 11A-11B, ¶¶0090-0091; Ex. 1002, ¶¶126-127; Ex. 1011, 557-562, 593-594, 601; Ex. 1009, 2:62-3:8, 1:54-2:18, 3:20-4:11, FIGS. 1-3; Ex. 1010, FIGS. 1-5B, 8:55-9:52, FIGS. 6A-10, 7:21-8:54, 9:53-10:22, 11:27-14:67; Ex. 1029, 3-4, 27-50.)

Nakamura discloses a "**switching circuit**" in different ways. (Ex. 1002, ¶¶128-129.) For example, at least transistors TR11/TR12/TR13 is a "**switching circuit**" for the above reasons. Alternatively, TR11/TR12/TR13 collectively with

other circuitry that facilitate operations to selectively activate an associated coil 11x/11y/11z is a "**switching circuit**" (*e.g.*, TR11/TR12/TR13 with circuitry relating to circuit 32 and/or switching circuit 22, or TR11/TR12/TR13 together with power transmission control IC 24 circuitry (*e.g.*, power adjusting section 32, one or more of the components 33-35 (*see* §§IX.A.1(f)-(k)). (Ex. 1002, ¶129; Ex. 1005, ¶¶0069-0073, 0076, 0079-0087, 0090-0091).

d) wherein the base unit and/or switching circuit includes a capacitive or other component that decreases harmonics in that activated primary coil;

Nakamura in view of *Berghegger* discloses/suggests this limitation. (Ex. 1002, ¶¶130-153; §§IX.A.1(a)-(c).) Circuit 10 in apparatus 1 ("**base unit**") includes a capacitor-circuit C2 (Ex. 1005, FIGS. 3, 5, ¶¶0071, 0090), but *Nakamura* does not expressly state a capacitor or other component decreases harmonics in an activated primary coil. However, the use of capacitor-based circuitry was known for minimizing/reducing harmonics created in alternating or pulsed signals. (Ex. 1002, ¶130.) For instance, such signals were known to include harmonic waves/signals that are multiples of a fundamental frequency of the reference wave/signal that may create unwanted radiation that generates/causes heat and inefficiencies in signal transmission, such those in an inductive power transfer system. (*Id.*, ¶131.) A POSITA was aware of technologies/techniques to mitigate such issues, such as

resonant circuits or related capacitor-based circuitry. (Ex. 1002, ¶132.) As such, a POSITA would have found it obvious to configure the apparatus ("**base unit**") or "**switching circuit**" discussed above (limitations 1(b)-1(c)) to include a capacitor or other component in order to decrease harmonics in signals transmitted from an activated primary coil. (*Id.*)

A POSITA was aware of the benefits that filters and/or related circuits provided to inductive-based power/data transfer systems for improving efficiency, mitigating heat, etc., via *e.g.*, minimizing unwanted harmonics in signals transferred between inductor coils. (Ex. 1002, ¶133.) Thus, a POSITA would have been motivated to leverage such knowledge and consider teachings in the art that would have guided the design/implementation/modification of *Nakamura*'s charger system to improve its operation and/or efficiency. (*Id.*)

Berghegger describes such teachings consistent with a POSITA's knowledge at the time. (Ex. 1002, ¶¶83-88, 134.) Similar to *Nakamura*, *Berghegger* discloses a wireless transfer system using primary-secondary coils for powering/charging a device and/or battery. (Ex. 1006, FIGS. 1a-1b, 4-6, Abstract, 1:65-2:17, 2:18-3:30, 5:27-30 (mobile device), 6:12-19 (batteries), 6:37-45.) In particular, *Berghegger* discloses/suggests the use of capacitive or other components in such a system, which

was known to decrease harmonics in a primary coil transmitting signals to a secondary coil. (*Id.*; Ex. 1002, ¶¶134-135.)

For example, *Berghegger* discloses a "basic circuit for driving an inductive resonant transmitter." (Ex. 1006, 3:51-61, FIG. 1a (below).) The circuit includes capacitors C1-C4 and resonant capacitor C*p* connected to a primary inductor L*p*. (*Id.*, 3:52-56.)

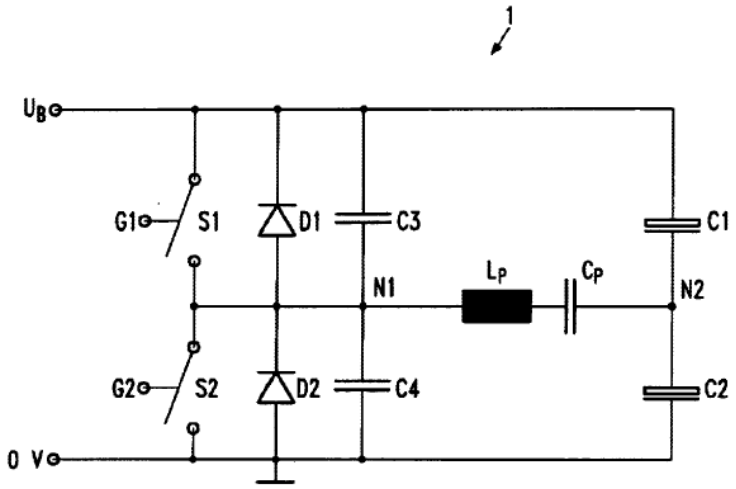

Fig.1a

In charge mode, L*p* "is magnetically coupled with an inductor L*s* on the secondary side, as shown in FIGS. 4 and 5" (below). (*Id.*, 4:24-26; Ex. 1002, ¶¶135-136, 141.)

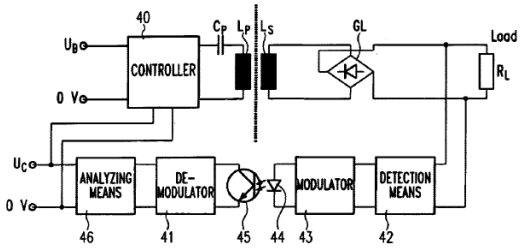

Fig.4

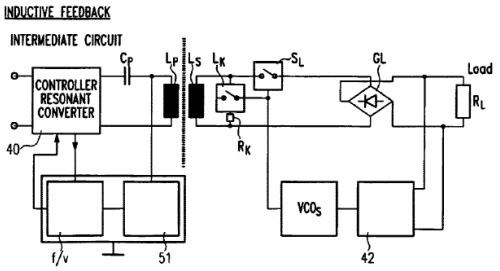

Fig.5

L*p* "forms a resonant circuit with the resonant capacitor C*p*" ("**a capacitive or other component**") (Ex. 1006, 3:58-59) that "operates at an oscillator frequency f*o*, which is excited by switches S1 and S2." (*Id.*, 3:59-61.) The resonant circuit (with capacitor C*p*) thus has a resonant frequency at the operating frequency of the power signals being transferred. (Ex. 1002, ¶¶136-137.)

A POSITA understood such a resonant circuit would decrease the harmonics of the primary coil signals and thus would improve transmission efficiency (*id.*, ¶137; Ex. 1006, 2:58-61 (using a capacitor with primary-side inductor "to obtain a serial resonant circuit ***has the advantage that the power transmission from the primary side to the secondary side is improved***"), 4:35-37 ("at a constant oscillator frequency f_O, the oscillation frequency *approaches the resonant frequency*, *whereby the transmitted power increases*")), consistent with a POSITA's state-of-art knowledge. (*Id.*, ¶¶138-140; Ex. 1016, 631 ("Resonant circuits…useful for constructing filters"), 641 ("A bandpass filter is designed to pass all frequencies within a band of frequencies, 798 ("highly selective" bandpass filter…***blocks out all***

higher harmonics"); Ex. 1013, (capacitor/switches reducing harmonics from primary coil), FIGS. 3 (annotated below), 6, 3:29-4:5, 4:19-5:7 (capacitor-based resonant circuit that "***reduce harmonics*** and eddy current" to minimize heat and "without causing excessive energy loss"), 7:24-8:14, 8:17-23 (tuning capacitor 24 designed so that a sinusoidal waveform "flows through the primary coil 9 with ***little high order frequency content***"), 8:24-31, 9:26-12:27); Ex. 1008, 2:16-19 (resonant tank); Ex. 1001, 16:40-17:17 (acknowledging harmonics are "undesirable").)

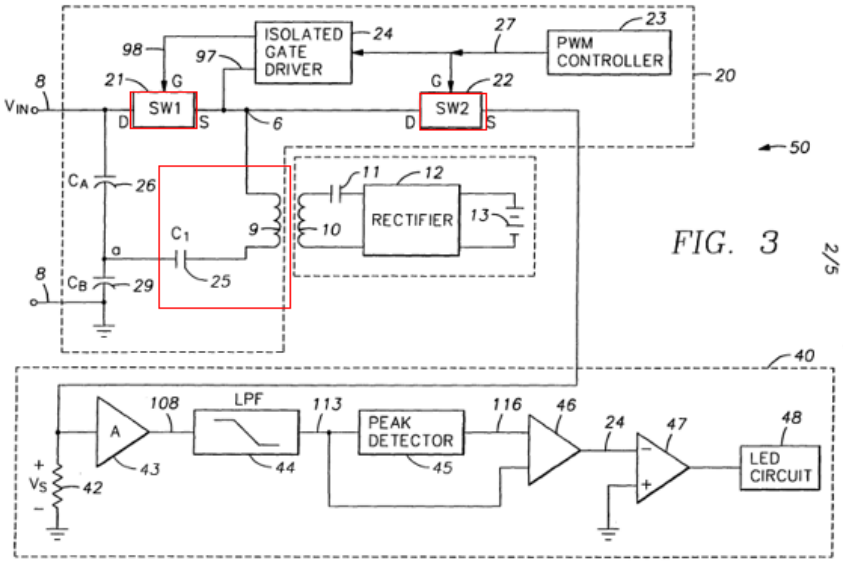

(*See also* Ex. 1012, FIGS. 2, 5 (C1 25, inductor 9), 8 (same), 3:30-62, 8:47-9:51; Ex. 1014, 67-68 ("a low-pass filter might be built in for ***reduction of harmonic output***"); *id.*, 62-68; Ex. 1015, FIGS. 1-2, 5-12, Abstract, 1:55-2:10, 3:28-51, 4:22-44, 5:45-6:4 (resonant frequency f_R set to approximately 1.5 to 2.0 times of signal output frequency f*o*, which a POSITA would have understood to decrease harmonics (Ex.

1002, ¶¶140-142)); Ex. 1020, Abstract, (harmonic reducing tuning capacitor in inductive power transfer system); Ex. 1021, ¶¶00164-0165 ("[i]t ***was known in the art to drive coils using parallel or series resonant circuits***" to allow "maximum current flow[] through the primary coil"); Ex. 1029, 22-25; Ex. 1017, 1:9-8:22; Ex. 1023, FIGS. 1-4, 6A-6C, 14, Abstract, ¶¶0007-0024, 0027, 0032-34, 0074-0078; Ex. 1002, ¶¶57-65, 141.)

The teachings of *Berghegger* are consistent with PO's assertions in the Texas Litigation. (Ex. 1018, 26-27; *id.*, 18-25; Ex. 1022.) PO alleges "possible charger designs [] specified in the WPC Standard" have a resonant capacitor-primary coil arrangement for decreasing harmonics that (as shown below) resembles configurations taught by *Berghegger* and the above state-of-art evidence.

Moreover, the types of possible charger designs are specified in the WPC Standard and each contains switching circuitry (red rectangles) and capacitors (green rectangles) to reduce harmonics. This is seen in the WPC Interface Definitions. E.g., The Qi Wireless Power Transfer System Power Class 0 Specification, WPC 1.2.4 Standard, Parts 1 and 2: Interface Definitions (February 2018), page 136 ("WPC 1.2.4 Standard, Parts 1 and 2, Interface Definitions").

Figure 47. Power losses illustrated

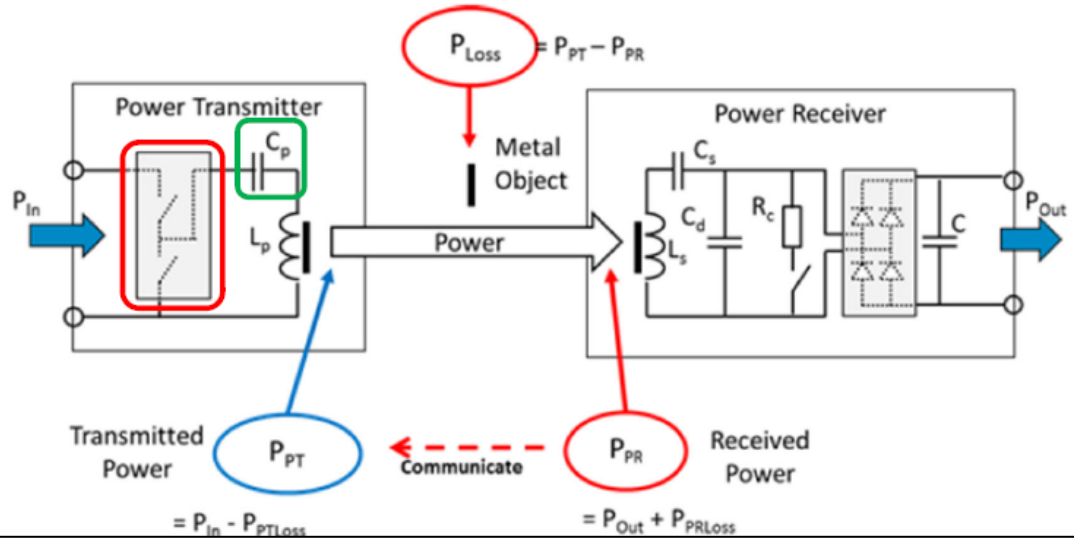

(Ex. 1018, 26 (yellow highlighting added).)

This is also seen in the WPC Reference Designs. E.g., The Qi Wireless Power Transfer System Power Class 0 Specification, Version 1.2.4, Part 4: Reference Designs (February 2018), page 42 ("WPC 1.2.4 Standard, Part 4, Reference Designs").

Figure 19. Electrical diagram (outline) of Power Transmitter design A6

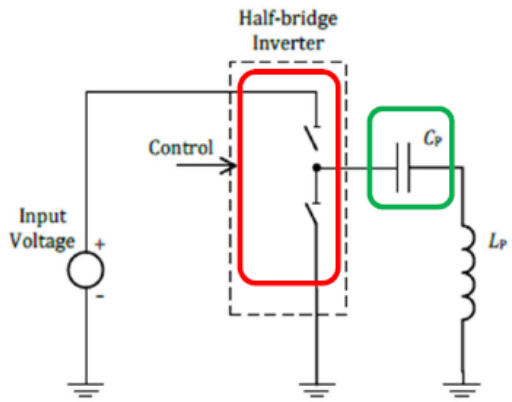

(*Id.*, 27.)

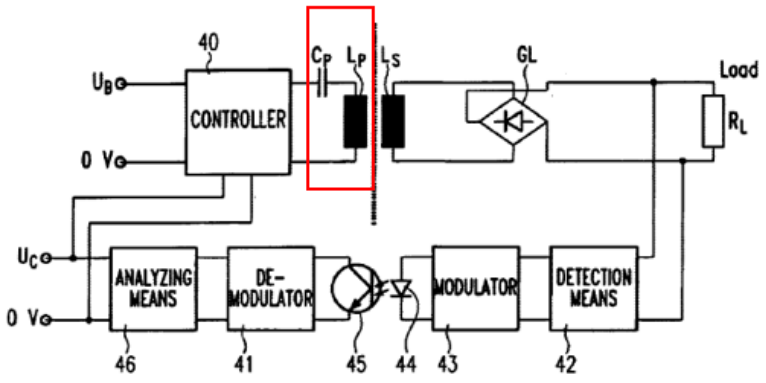

Fig.4

(Ex. 1006, FIG. 4 (annotated).)

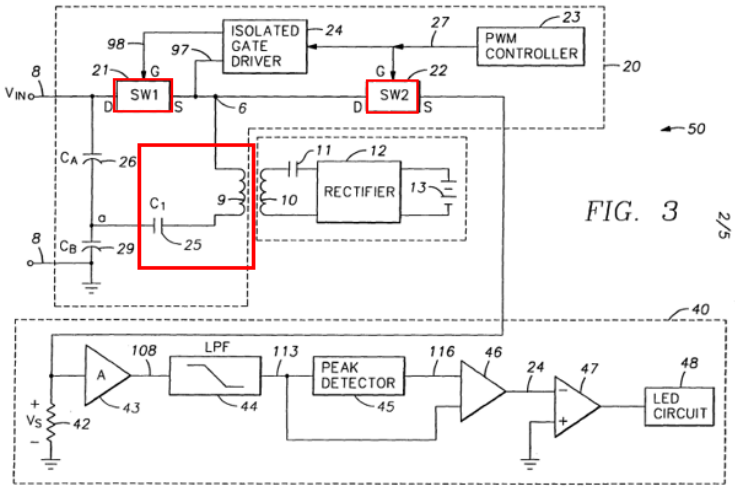

(Ex. 1013, FIG. 3 (annotated).)

PO's contentions also point to random capacitors as harmonic reducing capacitors for limitation 1(d). (*See* Ex. 1018, 14-27.) *Berghegger* also discloses other capacitors in its primary-side (Ex. 1006, FIG. 1a, 4:1-5, 3:61-66, 4:12-15), and

so under PO's interpretation/rationale (which Petitioner does not concede is appropriate), *Berghegger* teaches/suggests the claimed capacitive or other component as claimed.

Berghegger thus discloses use of a capacitive or other component (*e.g.*, C_P) that decreases harmonics in an activated primary coil. (Ex. 1002, ¶143.) As another example, other capacitors in the primary-side base unit (*e.g.*, FIG. 1a (C3-C4)) "serve interference suppression because they short-circuit high-frequency signals" (*e.g.*, "**decreases harmonics**") created during the "opening and closing of the switches or MOSFETs." (Ex. 1006, 4:1-5, 3:61-66, FIG. 1a; Ex. 1002, ¶143.)

Given such teachings/guidance of *Berghegger*/*Nakamura* (in context of a POSITA's knowledge), a POSITA had reasons to consider components/design options to improve signal transmission/operations in *Nakamura*'s system (*e.g.*, capacitive-based circuitry to reduce harmonics). (Ex. 1002, ¶144; §§IX.A.1(a)-(c).) Accordingly, a POSITA would have been motivated and found obvious to modify *Nakamura*'s "**base unit**" and/or "**switching circuit**" (*see* limitations 1(b)-1(c)) to include a capacitive or other component (*e.g.*, a capacitor-based filter circuit) that would have reduced harmonics in the activated primary coil 11x-z providing power to device 2/3. (Ex. 1002, ¶144.) Such modification would have increased efficiency in the energy transferred between the primary-secondary coils by, *e.g.*, decreasing

harmonics in the signals generated by the activated primary coil in *Nakamura*'s system (*e.g.*, decreasing noise/distortion, reducing heat caused by such unwanted harmonics, etc.), consistent with that known in the art and suggested by *Berghegger*. (*Id.*, ¶¶145-147; *infra* Sections IX.A.1(f)-(k).)

A POSITA had reasons to consider *Berghegger* in context of *Nakamura* given they are in the same technical field (as with the '208 patent) and (like *Nakamura*) discloses features reasonably pertinent to one or more particular problems a POSITA, and '208 patent inventor, was trying to solve. (*See* above citations to *Berghegger*/*Nakamura*; §§IX.A.1(a)-(c); Ex. 1006, 1:5-10, 1:10-3:29; Ex. 1005, FIG. 5, ¶¶0001-0007, 0020, 0090-0091; Ex. 1001, 1:28-3:16, 16:40-17:45; Ex. 1002, ¶¶148-149.) Thus, *Berghegger* would have been consulted by the inventor, and a POSITA, looking to address/solve similar issues (and others) relating to the design/implementation of an inductive charging system like that of *Nakamura*. (Ex. 1002, ¶¶148-149.)

A POSITA would have had the skills/capability and rationale to configure, and a reasonable expectation of success in implementing, the above modification given the teachings/suggestions of *Berghegger*/*Nakamura*, and would have considered the design benefit/tradeoffs in designing/implementing such modification. (Ex. 1002, ¶150.) Especially where it would have involved applying

known technologies/techniques (*e.g.*, capacitive-based filtering technologies to improve efficiencies (*e.g.*, reduce harmonics) as known in the art and taught/suggested by *Berghegger*) to yield the predictable result of providing an inductive power/charging system that reduced heat and/or distortion/interference in transferred signals, improved energy transfer, etc., with the flexibility to maintain the functionalities described by *Nakamura*. (*Id.*) *KSR Int'l Co. v. Teleflex Inc.*, 550 U.S. 398, 416 (2007). Balancing the tradeoffs between various design options (and its implementation), a POSITA would have had reasons to successfully configure such modification to *Nakamura*'s system. (*Id.*, ¶¶152-153.)

A POSITA would have contemplated various ways to implement such a modification. For example, an appropriately designed capacitor-based circuit between TR11/TR12/TR13 and coils 11x/11y/11z (*e.g.*, *see Berghegger*) or between circuit 22 and TR11/TR12/TR13 would have achieved a reduction in harmonics in primary coils 11x/11y/11z.[6] (Ex. 1002, ¶151.) Moreover, using a capacitive-based circuit to provide improved signal transmission would have been obvious because it

[6] The discussed modified arrangements are exemplary. Other designs/configurations would have been contemplated by a POSITA. (Ex. 1002, ¶151.)

would have been one of a "finite number of identified, predictable solutions." *Perfect Web Techs., Inc. v. InfoUSA, Inc.*, 587 F.3d 1324, 1331 (Fed. Cir. 2009).

e) a power supply for passing a current through the primary coils when activated, to generate the magnetic field in a direction substantially perpendicular to the plane of the primary coils;

Nakamura (including as modified) discloses this limitation. (Ex. 1002, ¶¶154-161; *see also* §§IX.A.1(a)-(d).) *Nakamura*'s "**charger system**" includes a power supply used to generate power (and thus **current**) that is passed through activated primary coils 11x/11y/11z to generate the magnetic field used to power/charge the device/battery. (*See* §§1(a)-1(d); Ex. 1005, FIGS. 1A-B, 2A-2B, 3-5, ¶¶0062, 0065, 0079-0083, 0084, 0090-0091.) Apparatus 1 receives commercial power (via AC plug/cord 1a-1b), which is converted (via rectifier 21, circuit L1-C1) and subject to switching (switch 22). The pulsed signals are provided to the primary coil(s) subsequently "supplied to a battery of the portable telephone 2 or the notebook PC 3…so that the battery is charged by means of the non-contact power supply using magnetic coupling." (Ex. 1005, ¶¶0062, 0065; *id.*, ¶¶0068, 0089, 0090-0091, 13A-13E, ¶¶0108, 0111-0117, 0121, 0123, 0129; Ex. 1002, ¶¶154-156.)

By applying the pulsed voltage from circuit 22 to coils 11x/11y/11z, a **current** is passed through the coils, and thus the "**power supply**" (*supra* and *infra*) is "**for**

passing a current through" activated primary coil(s), as claimed. (Ex. 1002, ¶¶33, 36-43, 157, 159.)

A POSITA would have understood that the magnetic field generated by activated primary coil(s) 11x/11y/11z would be "**in a direction substantially perpendicular to the plane of the primary coils**," as claimed for reasons similar to that explained above. (Ex. 1002, ¶158; *supra* §IX.A.1(c); Ex. 1005, Abstract, FIGS. 2B, 5, ¶¶0018, 0062, 0065, 0079-0082, 0090-0091; Ex. 1011, 557-562, 593-594, 601; Ex. 1009, FIGS. 1-3, 1:54-2:18, 2:62-3:8, 3:20-4:11; Ex. 1010, FIGS. 1-5B, 6A-10, 7:21-10:22, 11:27-14:67.)

Thus, *Nakamura* discloses a "**power supply**" in different ways. For example, the commercial power components (1a, 1b) and/or components connecting thereto is a "**power supply**" since it is the source of power that leads to the current passed through primary coils 11x/11y/11z, resulting in the magnetic field facilitating power transfer. (§§IX.A.1(a)-(d); Ex. 1002, ¶159.) Alternatively, the AC power interface components (1a, 1b) and/or interface components in apparatus 1 and rectifier 21 (or rectifier 21 alone) is a "**power source**" for similar reasons. Another example is switching component 22 alone, or collectively with one or more other components, such as rectifier 21, AC power components (1a, 1b), and/or interface components

connecting thereto. (Ex. 1005, ¶¶0065, 0090-0091; Ex. 1002, ¶¶159-161; §§IX.A.1(f)-(k).)

Such understandings/teachings are consistent with descriptions of a power source or supply in the '208 patent, which encompasses external power sources. (Ex. 1001, 6:38-45 (charger pad or pad "can be powered by plugging into a *power source* such as a wall socket" … "pad being powered through the USB outlet of a laptop"); Ex. 1002, ¶160.)[7] They are also consistent with PO's interpretations in its infringement contentions. (Ex. 1018, 27 (alleging for limitation 1(e) that accused products "each have an external power supply (e.g., AC/DC USB adapter), powered by an AC source (e.g., AC wall power) and/or internal power supply (powered by the external power supply) or DC source (e.g., an internal battery)"), 28-30.)

f) a communications interface that the base unit, and the mobile, electronic, or other device and/or battery, battery door, or skin for use with the device, use to

[7] The '208 patent refers to "the charger or power supply" when discussing certain configurations (*e.g.*, Ex. 1001, 4:66-5:4, 6:26-30), but does not describe the *claimed* "power supply" (*generally* Ex. 1001). In contrast, the '208 patent refers to power "sources" in different ways, including those external to the charger pad. (*E.g.*, *id.*, 6:34-45, 8:13-22 (generic power source 18), 17:63-18:2, FIG. 10 (showing a source of power VC).) (*See supra* n.3.)

communicate with one another during powering or charging, to

Nakamura (including as modified) discloses this limitation. (Ex. 1002, ¶¶162-173; §§IX.A.1(a)-(e).) *Nakamura*'s "**charger system**" is configured to exchange information between the primary and secondary side circuits via magnetic coupling. (Ex. 1005, FIGS. 3-5, Abstract, ¶¶0066 ("A signal including such as information on power supply or the like is transmitted between the primary side circuit 10 and the secondary side circuit 13 by the noncontact transmission method."), 0070, 0075 (power receiving control IC 42 components perform "signal processing for a signal transmitted through the primary side coil 11 and secondary side coil 12"), 0076-0077.) Transmitted device information (in response to carrier wave from apparatus 1) is used to control powering/charging operations. (*Id.*, FIG. 4, ¶¶0077-0089; *id.*, ¶¶0090, 0091; Ex. 1002, ¶¶162-163.)

Such communication features can also be implemented using a separate primary coil 11b from primary coils used for power transfer. (Ex. 1005, FIG. 6 (below), ¶¶0092-0094.) Such features can be implemented in the FIG. 5 configuration. (*Id.*, ¶0092; Ex. 1002, ¶164.)

FIG. 6

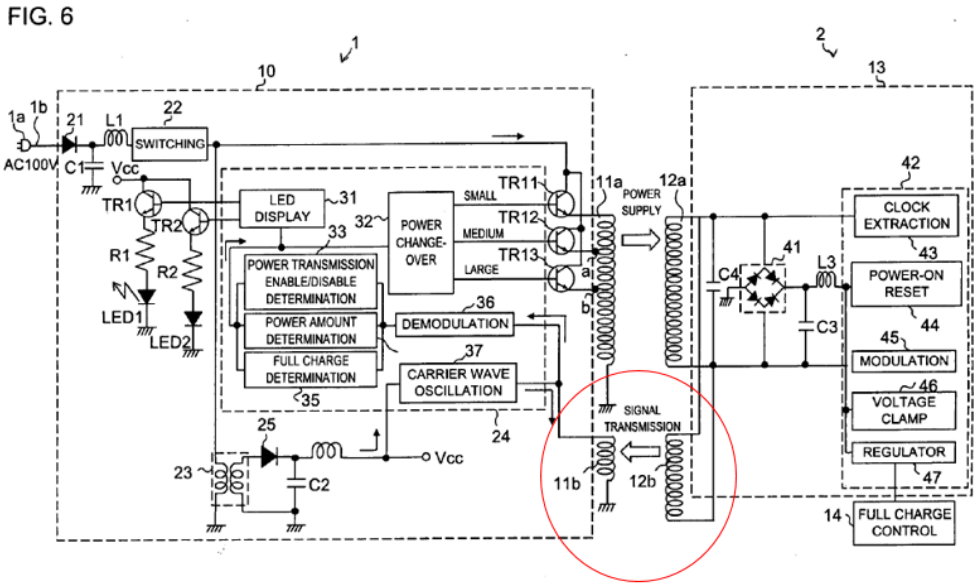

The "**base unit**" 1 and "**device**" 2/3 can "**communicate with one another during powering or charging**." For example, *Nakamura* discloses "[e]ven *after the power transmission is started*, the carrier wave is regularly transmitted (step S13), and it is checked whether or not the portable telephone 2…has been removed…*according to the information* included in the modulated wave transmitted back against the carrier wave (Step S14)." (Ex. 1005, ¶0086; *see also id.*, ¶0077.) In this way, information is communicated "**during powering or charging**" via the magnetic coupling between primary and secondary coils. (Ex. 1002, ¶165.) Also, during powering/charging operations, device 2/3 communicates information (*e.g.*, "full charge" and other information), which is used by primary circuit 10 to control/stop charging/powering the battery/device. (Ex. 1005, ¶¶0066, 0077-0088, 0090-0091, 0096-0097.)

FIG. 4

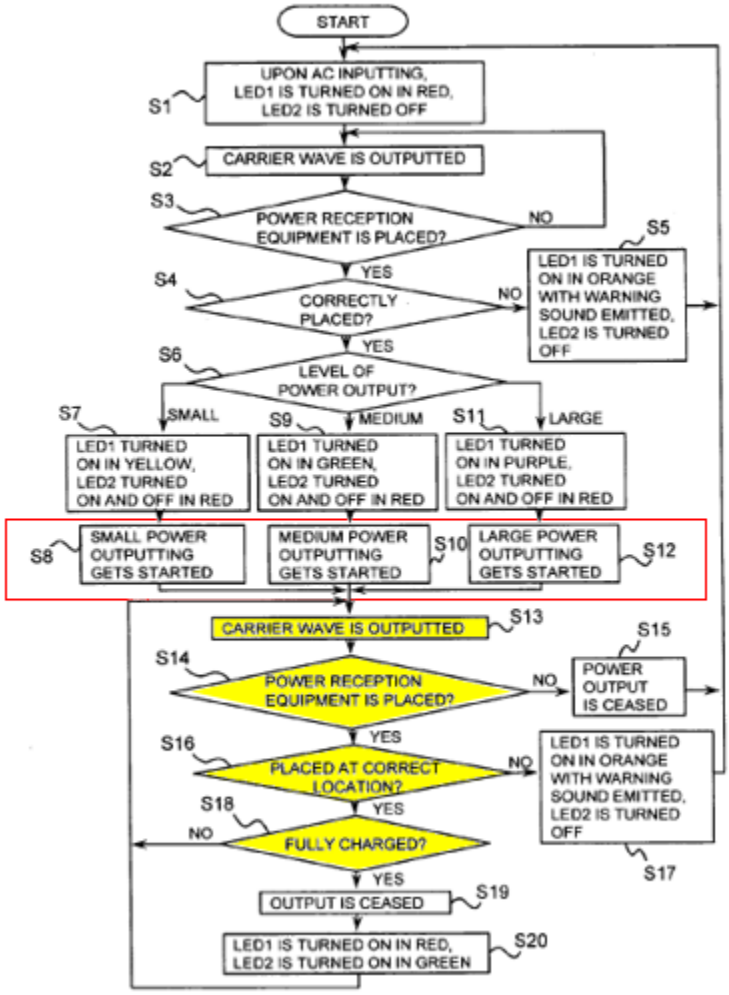

(Ex. 1005, FIG. 4 (annotated); Ex. 1002, ¶¶166-168.)

Thus, *Nakamura* discloses in different ways a "**communications interface**" that the "**base unit**" 1 and the mobile "**device**" 2 "**use to communicate with one another.**" For example, power adjusting section 32 is a "**communications interface**" since it is used by both device 2/3 and apparatus 1 to facilitate communications of the carrier wave/information signals, as discussed. (Ex. 1002,

¶169.) For similar reasons, "power-on reset circuit (carrier wave detection circuit) 44" is another example of such an "**interface**." (*Id.*; Ex. 1005, ¶¶0074-0075, 0077-0078, 0086-0091.) Similarly, modulation circuit 45 alone or in combination with circuit 44 is an example of a "**communications interface**" since it is used by both apparatus 1 and device 2/3 to communicate information signals. (Ex. 1002, ¶169; Ex. 1005, ¶¶0074-0075, 0077-0078, 0086-0091)Carrier wave oscillation component 37 is another example of a "**communications interface**" (providing the wave resulting in the subsequent modulation/generation of information communicated from device 2/3). (Ex. 1005, ¶¶0069-0070, 0076-0078, 0086-0091.) Demodulation component 36, alone or collectively with other components in control IC 24 (*e.g.*, components 32-34, and/or 35) is another example of a "**communications interface**." (*Id.*, ¶¶0070, 0078, 0083, 0086-0091.) Alternatively, circuitry/components relating to primary coils 11x/11y/11z and/or secondary coil 12 are collectively a "**communications interface**" given they are used by device 2/3 and apparatus 1 to communicate the carrier wave and/or information/signals used to control power/charge operations. *(Id.*, ¶¶0070, 0076-0091.) (Ex. 1002, ¶169.) Moreover, where the features of FIG. 6 are implemented, primary coil 11b is another example of a "**communications interface**" since it is used by device 2/3 and apparatus 1 to communicate signals/information. (Ex. 1002, ¶170; Ex. 1005, ¶¶0070, 0076-0091.)

Alternatively, secondary coil 12b (alone or collectively with coil 11b) is such an "**interface**" (alone or collectively with coil 11b) for similar reasons. (Ex. 1002, ¶170; Ex. 1005, ¶¶0070, 0076-0091.) Likewise, communications coil 11b collectively with one or more components of control IC 24 (*e.g.*, components 32, 33, 34, 35, 36, and/or 37) is another example. (Ex. 1002, ¶170; *See* §§IX.A.1(a)-(e), 1(g)-(k); *see also* Ex. 1001, FIG. 8, 15:19-20 (black box "data communications and storage units"), FIG. 21, 23:7-19 (exemplary components for "communications and/or storage unit"); Ex. 1002, ¶¶171-173.)

g) poll each of the primary coils, or receive a signal from a sensor associated therewith, to verify the presence of the mobile, electronic, or other device and/or battery, battery door, or skin for use with the device placed upon or close to the surface of the base unit,

Nakamura (as modified above) discloses/suggests this limitation. (Ex. 1002, ¶¶174-188; §§IX.A.1(a)-(f), 1(h)-1(k).)

The above discussions demonstrate how *Nakamura* discloses "**verify[ing] the presence of the mobile [device]**" 2/3 that is "**placed upon or close to the surface of the base unit**" (apparatus 1). (§§IX.A.1(a)-1(f); Ex. 1002, ¶¶174-175.) For example, apparatus 1 has "functions of recognizing power reception equipment placed on the power transmission apparatus 1 so as to transmit power necessary…depending on the type." (Ex. 1005, ¶0063.) Demodulation circuit 36

receives/demodulates the modulated information signal from device 2/3, which includes a "*code indicating being power reception equipment*," and provides it to "power transmission enable/disable determination circuit 33." (*Id.*, FIGS. 4-5, ¶0078.) Determination circuit 33 "***determines whether or not power reception equipment is placed on the power transmission apparatus 1***, ***based on the 'code indicating being power reception equipment'*** (step S3)." (*Id.*, ¶0078.) If the code is received, "***it is determined that power reception equipment is placed on the power transmission apparatus 1 and it is <u>determined whether or not the power reception equipment is correctly placed on the power transmission apparatus 1</u>*** (step S4)." (*Id.*; *id.*, ¶¶0077, 0079 (correctly placed involves positions where "high power transmission efficiency…is obtained"), 0080 ("highest coupling" at "0" deviation), 0081-0083 (positional deviation "exceeds a predetermined value"), FIGS. 11A-11B, ¶¶0086-0088, 0096, 0109, FIGS. 13A-13E.) For reasons explained, the "**communications interface(s)**" (limitation 1(f)) provides the communication between the "**base unit**" and "device" to facilitate the above-verification features. (*Supra* §IX.A.1(f); Ex. 1002, ¶¶175-182.)

PO asserts that a demodulator senses current modulation in a charger coil to "sense the presence or absence of the receiver." (Ex. 1018, 35.) *Nakamura* discloses a demodulation circuit 36 that is connected to primary coil(s) and demodulates the

received information signal to supply the "code" information to circuits 33-35 used to verify presence of device 2/3. (*Id.*; Ex. 1005, FIGS. 3-5, ¶¶0069-0070, 0078-0083.) Thus, *under PO's interpretation/representation*, *Nakamura* discloses receiving a signal from such a sensor associated with the primary coil(s) to verify the presence of device 2/3, like that claimed.

Nakamura also explains the presence of device 2/3 "**placed upon or close to the surface of the base unit**" (apparatus 1) is "**verif[ied]**" by measuring intensity of the power/information signal(s) communicated via coils 11 and 12. (Ex. 1005, ¶¶0078-0079, 0080 ("transmission efficiency of power and the information signal"), 0081-0082.) While such mechanisms likely include an associated "**sensor**" (Ex. 1002, ¶¶179-181), *Nakamura* does not expressly state so ("**receiv[ing] a signal from a *sensor* associated**" with "**each of the primary coils**"). However, it would have been obvious to configure/implement a "**sensor**" associated with each primary coil 11x/11y/11z (FIG. 5) in the above-discussed *Nakamura-Berghegger* system to facilitate communication of the information signal (*e.g.*, power reception equipment code) used to verify "whether or not power reception equipment is placed on the power transmission apparatus 1." (*Id.*, ¶0078, FIGS. 4, 11A-11B, ¶¶0079-0081; Ex. 1002, ¶¶181-183.)

A POSITA would have been motivated to implement such a modification in light of the teachings/suggestions in *Nakamura* such as using signal intensity as a way of determining/verifying the presence of device 2 "**placed upon or close to the base unit**" (apparatus 1). A POSITA would have appreciated *Nakamura*'s system uses various components to facilitate such verification features, and looked to implement known techniques/technologies that would ensure a properly positioned mobile device is detected to allow power transfer to occur. (Ex. 1002, ¶184; Ex. 1005, ¶¶0062, 0065, 0078-0082.) A POSITA would have found it obvious to configure the modified *Nakamura* system with a "sensor" that senses current in the primary coils 11x/11y/11z resulting from the modulated information signals received from device 2/3. In one example, sensor(s) would have been implemented in association with primary coils 11x/11y/11z, demodulation component 36, or other components to allow measuring signal intensity like that disclosed by *Nakamura*. (Ex. 1005, ¶0081; Ex. 1002, ¶184.) A POSITA would have been similarly motivated and found obvious to implement/consider other types of sensors (*e.g.*, proximity/presence sensors) known to provide signals indicating the presence of an object (*e.g.*, via capacitive, optical, resistive, or magnetic mechanisms). A POSITA would have been familiar with such conventional technology (*e.g.*, sensors) that would have been able to provide signals used by apparatus 1 to ensure verification

of a present and properly positioned device 2/3 exists before transferring power. (Ex. 1002, ¶185; §§IX.A.1(a)-(f), IX.A.1(h)-(k).)

A POSITA would have had the requisite skills, knowledge and capabilities to design and implement such "**sensor**"-type features in the combined *Nakamura-Berghegger* system, and done so with a reasonable expectation of success given the teachings of *Nakamura* and the knowledge of such a POSITA at the time. (Ex. 1002, ¶186.) As noted, such modification would have involved applying known technologies/techniques (*e.g.*, conventional sensors for sensing current, reception of information signals, proximity/position, etc. to verify proper device positioning) to yield the predictable result of complementing the *Nakamura-Berghegger* system to ensure signal(s) are generated and used by apparatus 1 components to facilitate the power transfer operations consistent with that described by *Nakamura*. (Ex. 1002, ¶¶187-188.) *KSR Int'l Co.*, 550 U.S. at 416.

h) select, based on the polling or sensing, from within the plurality of primary coils, and selectively switch, using their associated switching circuits to activate, only those one or more primary coils which are determined to be most closely aligned with a receiver coil at the mobile, electronic, or other device and/or battery, battery door, or skin for use with the device, and

Nakamura (including as modified above) discloses/suggests this limitation. (Ex. 1002, ¶¶189-197; §§IX.A.1(a)-(g).)

The analysis for limitations 1(a)-1(g) explains how *Nakamura* discloses using "**switching circuits**" (limitation 1(c)) associated with one of the primary coils 11x/11y/11z to power/charge "device" 2/3. (§§IX.A.1(a)-(g); Ex. 1005, FIGS. 1-5, ¶¶0062-0065, 0069-0076, 0083-0091.) As explained, a primary coil 11x/11y/11z is selected via an associated switch TR11/TR12/TR13 based on the demodulated "information on consumed power" received from device 2/3. (§§IX.A.1(a)-1(g); Ex. 1002, ¶¶190-191; Ex. 1005, FIGS. 1-5, ¶¶0083-0085, 0090-0091.)

The above analysis also demonstrates how *Nakamura* discloses providing power to device 2/3 via the selected primary coil and the secondary coil when it is determined a "**device**" 2/3 is present and properly positioned on/near the surface of apparatus 1 ("**base unit**") where a high degree of magnetic coupling is established. (§§IX.A.1(f)-1(g); Ex. 1005, ¶¶0062, 0065, 0078-0082, 0086-0088, 0090-0091, 0096, 0109.) The above analysis also demonstrates how *Nakamura* discloses, or that it would have been obvious to modify the *Nakamura-Berghegger* system to use, a "**sensor**" to facilitate such verification functionalities. (§§IX.A.1(f)-(g); Ex. 1002, ¶192.)

For those reasons, and those below, the *Nakamura-Berghegger* system discloses/suggests selectively switching, using the switching circuits, to activate only those *one* or more primary coils that are determined to be most closely aligned

with the receiver coil of device 2/3, as claimed. (Ex. 1002, ¶193.) As explained, only when a properly aligned/positioned device 2/3 is detected will *Nakamura*'s system allow power/charge operations to commence/continue. (*See* §§IX.A.1(f)-(g); Ex. 1005, FIG. 4 (S4 ("No"), S5, S1-S3) (annotated below)), ¶¶0076-0081, 0082 (no power transmission is performed if positional deviation "exceeds a predetermined value (step S4)"), 0086 (ceasing power transmission by turning off TR11/TR12/TR13 when device 2 removed); Ex. 1002, ¶¶194-195.)

FIG. 4

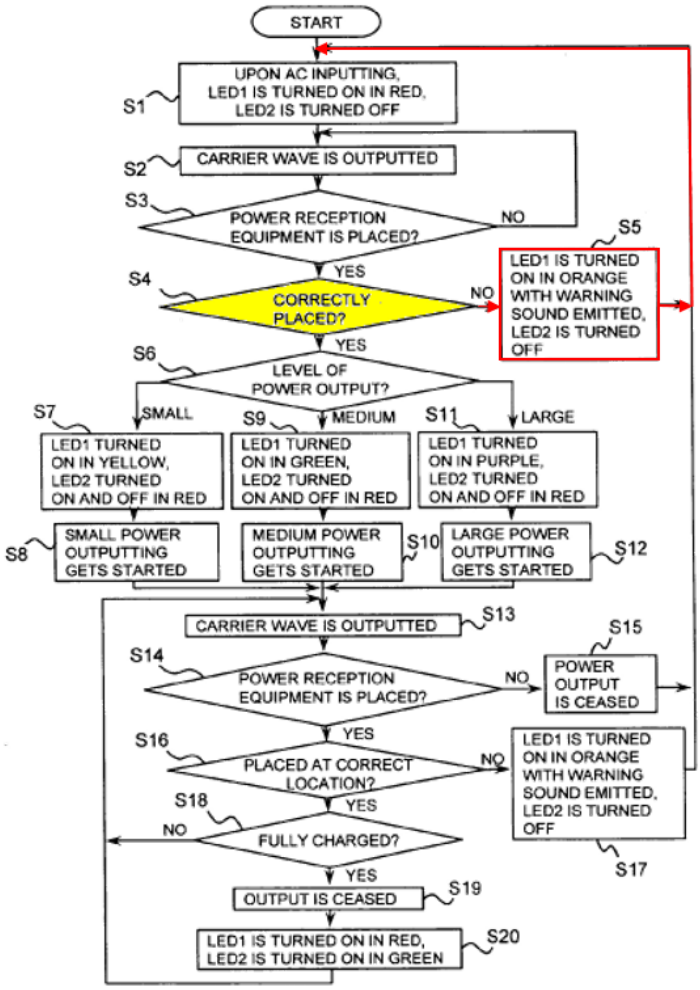

Thus, the *Nakamura-Berghegger* modified system discloses and/or suggests "**activat[ing], only those *one* or more primary coils** (one of coils 11x/11y/11z) **which are determined to be most closely aligned with a receiver coil** (coil 12) **at the mobile** [**device**] (2/3)" since *Nakamura* encompasses configurations where power/charge transmissions only occur when device 2/3's coil is determined to be

properly aligned ("**most closely aligned**") with a primary coil 11 where high magnetic coupling is established. (*See supra*; Ex. 1002, ¶196; Ex. 1005, FIG. 4.)

Likewise, the *Nakamura-Berghegger* modified system discloses and/or suggests using the identified "**communications interface**" (limitation 1(f)) to "**select**, **based on the polling or sensing, from within the plurality of primary coils**" (limitations 1(a), 1(g) and above 1(h) analysis), "**and selectively switch, using their associated switching circuits** (1(c) and above) **to activate, only those *one* or more primary coils** (one of coils 11x/11y/11z) **which are determined to be most closely aligned with a receiver coil at the mobile** [device]" (§§IX.A.1(c)-(d); *see also* §§IX.A.1(a)-(b), 1(e)-1(g), and above analysis). (Ex. 1002, ¶197; §§IX.A.1(i)-(k).)

i) periodically thereafter exchange information to provide power transfer to the device and/or battery, including device and/or battery charging or power status or presence; and

Nakamura (as modified above) discloses/suggests this limitation. (Ex. 1002, ¶¶198-205; §§IX.A.1(a)-(h).)

The analysis for limitations 1(f)-1(h) and 1(k) explains how *Nakamura* discloses ***after*** one of the transistors TR11-13 is selected to allow current to pass to an associated activated primary coil 11x/11y/11z appropriate for a verified present and properly positioned device 2/3, and *after power transmission has started*

between apparatus 1 ("**base unit**") and "**device**" 2/3, the "**communications interface**" (limitation 1(f)) is used "**to exchange information to provide power transfer to the device and/or battery**" (device 2/3 or its battery) that includes "**device and/or battery charging or power status or presence**" as claimed. "Even *after the power transmission is started*, the carrier wave is *regularly transmitted* (step S13)…checked whether or not [device] 2…has been removed…according to the information included in the modulated wave *transmitted back* against the carrier wave (Step S14)." (Ex. 1005, ¶0086, ¶0088 ("**Thereafter**, the carrier wave is outputted to thereby ***continue*** **confirmation of a** ***state of the power reception equipment*** (step S13)"); ¶¶0066, 0077-0089, 0090-0091, 0096-0097, FIG. 4; Ex. 1002, ¶¶198-199.) The information exchanged includes carrier wave signal and responsive device information (*e.g.*, information on power reception equipment, consumed power, and full charge, which are included in the demodulated information signal) ("**device and/or battery charging or power status or presence**"). (*E.g.*, Ex. 1005, ¶¶0076-0082, FIG. 4 (below) (steps S1-S5), ¶¶0086-0087 (steps S13-S19), 0088; Ex. 1002, ¶200.)

FIG. 4

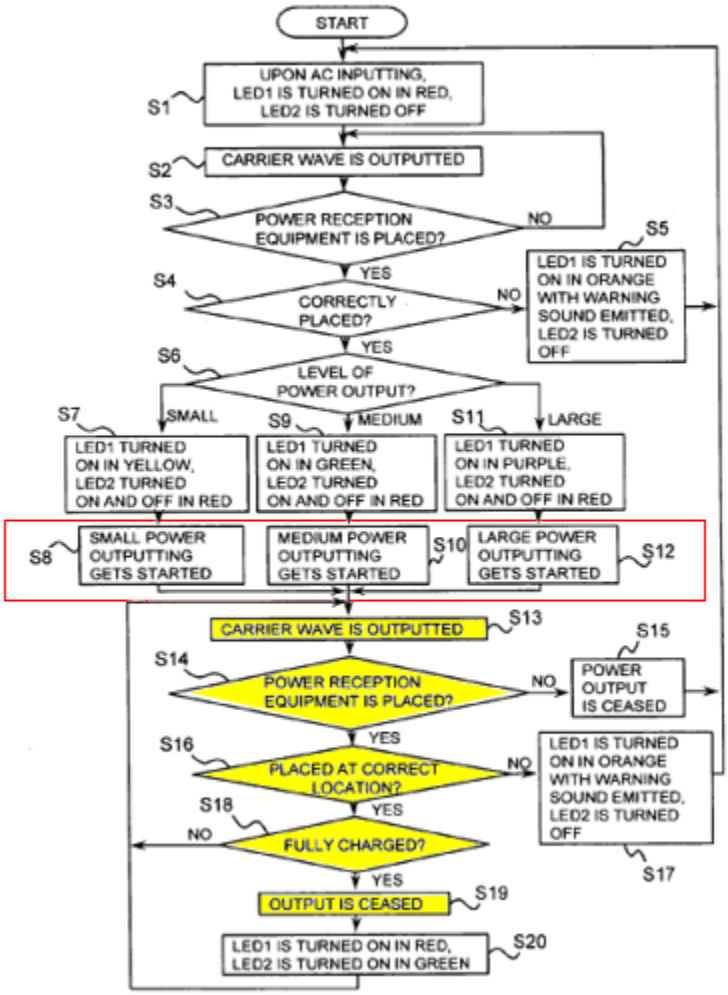

Carrier wave oscillation circuit 37 "***regularly suppl[ies] a carrier wave*** to the primary side coil," and demodulation circuit 36 "receiv[es]" and "demodulat[es]" a "received information signal" including "***information*** on the power reception equipment" that is "transmitted from the power reception equipment ***in response to the carrier wave***." (Ex. 1005, ¶0020; Ex. 1002, ¶201.)

A POSITA would have understood the exchange of information that occurs after initial power transfer (*e.g.*, steps S1-S12 (FIG. 4)) is necessarily performed "**periodically**" because *Nakamura* discloses ***continuously/regularly*** communicating the carrier wave from apparatus 1 to device 2/3 during power transfer operations, resulting in the modulated information signals being continuously/regularly transmitted to apparatus 1 from device 2/3. (Ex. 1002, ¶¶202-203; Ex. 1005, FIG. 4, ¶0088.)

Nonetheless, to the extent such "periodic[]" information exchange is not disclosed, it would have been obvious to a POSITA to configure the *Nakamura-Berghegger* system to periodically send the carrier wave from apparatus 1 to device 2/3 after power transmission has started, resulting in the periodic communication of modulated information signals from device 2/3. (Ex. 1002, ¶204.) Such a modification would have provided a routine/predictable sequence for the charging system to follow to ensure device 2/3 is routinely checked for proper device presence/alignment and charge status, consistent with the operations of *Nakamura*. (*Id.*) A POSITA would have been motivated to implement such predictable features in light of *Nakamura*'s teachings/suggestions of continuously/regularly checking the state/status of device 2/3 during power transmissions to avoid overcharging the device (full charge state) and to achieve efficient power transmission

(presence/proper positioning is maintained). (*Id.*, ¶205) A POSITA would have had the requisite skills/capabilities/knowledge to design/implement such features (*e.g.*, via clock/timer circuitry, configuration of the integrated circuitry in apparatus 1 (*e.g.*, IC 24), etc.) with a reasonable expectation of success, especially in light of *Nakamura*'s teachings, and those of *Berghegger* and the state-of-art knowledge discussed above and below. (*Id.*; §§IX.A.1(a)-1(h), IX.A.1(j)-(k).)

j) wherein the substantially perpendicular magnetic field is used to inductively generate a current in the receiver coil within or on the mobile, electronic, or other device and/or battery, battery door, or skin for use with the device placed upon the activated primary coil of the base unit, to charge or power the device and/or battery, and

Nakamura (including as modified above) discloses/suggests this limitation. (Ex. 1002, ¶¶206-212; §§IX.A.1(a)-(i).)

The analysis for limitation 1(c) explains how *Nakamura* discloses/suggests generating a "**substantially perpendicular magnetic field**" in the inductive coupling formed by primary coil(s) 11x/11y/11z and secondary coil 12 used to power/charge device 2/3 (or battery). (§IX.A.1(c); Ex. 1002, ¶206.)

The analysis/teachings/suggestions for other limitations also support such an understanding, and explain how the magnetic field "**is used to inductively generate a current in the receiver coil within or on the mobile** [device] **placed upon the**

activated primary coil of the base unit, to charge or power the device and/or battery" like that claimed. (§§IX.A.1(a)-1(i), 1(k) (explaining how the presence of a properly positioned device 2/3 results in powering/charging the device/battery); Ex. 1005, ¶0008, 0062-0063, 0065, 0083-0091; Ex. 1002, ¶¶207-208.) Indeed, "**current**" would have been inductively generated in the receiver coil 12 of the *Nakamura-Berghegger* system, consistent with that known in the art and disclosed/suggested by *Nakamura-Berghegger*. (Ex. 1002, ¶¶209-212; Ex. 1005, ¶0100 ("current flowing in the power reception equipment"), Ex. 1008, 1:21-31 (receiving device "receives induced current from the [primary] coils to permit battery charging"), Ex. 1013, Abstract ("current induced in a secondary coil"), 4:29-5:2, Ex. 1021, Abstract, ¶¶0039 (electromagnetic field induces a current), 0088); Ex. 1025, 1:10-15, 12:5-9, FIG. 1.)

k) wherein the base unit, and receiver coil or circuitry associated therewith, use current modulation performed by the receiver coil or its circuitry, to provide an indication that is then used by the base unit to

(1) determine and regulate one or more of output voltage, current, or power provided by the base unit to the device and/or battery to be within the range of one or more of a value of a required voltage, current, or other power parameter for the mobile, electronic, or other device and/or battery, battery door, or skin for use with the device,

(2) <u>and/or</u> verify the continued presence of the receiver coil near the base unit.

Nakamura (including as modified above) discloses/ suggests using "current modulation" as claimed to "provide an indication that is then used by the base unit to" either (1) "determine and regulate…" as recited in 1(k)(1) "and/**<u>or</u>**" (2) verify the continued presence of the receiver coil as recited in 1(k)(2). (Ex. 1002, ¶¶213-224; §§IX.A.1(a)-(j).) *Nakamura* (as modified) discloses/suggests this limitation both ways.

As explained, apparatus 1 and device 2/3's coil 12 and/or its associated circuitry in device 2/3 use modulation techniques to communicate the information signals that provides an "**indication**" that is used by apparatus 1 to regulate/control power/charge operations by either determining/regulating/controlling the level of power, and/or verify the continued presence/proper alignment of coil 12 near apparatus 1 (and primary coil(s) 11x/11y/11z). (§§IXA.1(a)-(j); Ex. 1002, ¶214.) For instance, ***modulation*** circuit 45 in device 2/3 (*e.g.*, receiver circuitry) modulates the carrier wave based on information regarding the device. (Ex. 1005, ¶0077.) ***Modulation*** circuit 45 supplies a modulated wave to coil 12, which "is transmitted to the primary side coil 11 magnetically coupled thereto," and demodulation circuit 36 connected to primary coil(s) 11x/11y/11z "receives and ***demodulates*** the transmitted modulated wave and supplies" the device information used by

determination circuits 33-35 to regulate/control power/charge operations for device 2/3, and/or verify presence/alignment as discussed. (Ex. 1005, FIG. 4, ¶¶0076-0083, 0088.) *Nakamura* explains the "modulation system adopted at this time is a phase modulation in which a carrier wave is cyclically intensity modulated to express 0/1 information with phase change information of a signal." (*Id.*, ¶0077.) A POSITA would have understood that in performing such modulation, the information/code(s) communicated by the device 2/3 is configured to provide indication(s) used by the base unit to determine/verify the presence/alignment of the mobile device/secondary coil and to determine/regulate the amount of voltage, current, or power provided by the base unit to the device, as discussed. (§§IX.A.1(a)-(j); Ex. 1002, ¶¶214-215.)

However, to the extent *Nakamura* does not disclose the receiver coil/circuitry use "current modulation" to provide an indication to apparatus 1 as recited in limitation 1(k), it would have been obvious to configure the *Nakamura-Berghegger* system to use "current modulation" to facilitate communication of the "**indication**" modulated signals (like that claimed). Namely, a POSITA would have been motivated to configure the system to use "**current modulation**" to communicate between apparatus 1 and device 2/3 as it would have been a predictable and obvious configuration/implementation of known modulation techniques and use of components in the modified system to adjust the property of the carrier wave signals

for including/encoding information (*e.g.*, current and voltage—both present in the carrier wave signals communicated between apparatus 1 and device 2/3)), including those that represent, *e.g.*, the "code(s)" used to confirm power reception equipment, full charge, and/or power level that allow the system to verify presence/alignment of coil 12 and/or selectively charge/power device 2/3 (or its battery), consistent with that disclosed by *Nakamura*. (Ex. 1002, ¶216.)

A POSITA would have been motivated to configure the "receiver coil or its circuitry" in the modified system to perform "current modulation" given it was a known modulation technique among a finite number of identified, predictable solutions to transmit/represent data in inductively coupled systems like *Nakamura*. *KSR* at 421. (Ex. 1002, ¶¶216-217; Ex. 1044, Abstract (data translated by current modulation/demodulation in inductive power/data transfer system), 2:7-9, 2:38-44, 4:21-34, 5:12-14, 6:12-33; Ex. 1045, 9:20-24, 15:16-21, 21:21-22:3, FIGS. 1-3, 11-13; Ex. 1046, Abstract, FIGS. 1, 3A-8, 3:25-4:35, 5:27-7:23, 10:22-24 (inductive data/power transmission system where "data signal transmission will be implemented by a current modulation" explained via FIGS. 3-4), 10:25-12:17.) Indeed, the description of "current modulation" in the specification of the '208 patent is in context of conventional technologies, which supports the understanding that such features were known by a POSITA at the time. (Ex. 1001, 18:44-57

(discussing ATMEL e5530 controller that "modulates current in the secondary that can then be detected as current modulation in the primary"); Ex. 1043 (ATMEL e5530 datasheet); Ex. 1002, ¶217.)

A POSITA would have recognized *Nakamura*'s disclosures where coil 12 (and related circuitry in receiver component 13) use **modulation** and magnetic coupling to generate/transmit the information signals to primary coil(s) 11x/11y/11z (and related apparatus 1 components) that provide indication(s) like those discussed below for limitations 1(k)(1)-(2). (Ex. 1002, ¶218.) Consistent with that known in the art, current flowing in secondary coil 12 would produce an electromagnetic field that induces current to flow in primary coil(s) 11x/11y/11z when the modulated signals are communicated. (Ex. 1002, ¶¶33, 36-43, 214-215; Ex. 1011, 593-94, 601; Ex. 1035, 34-35; Ex. 1013, Abstract, 4:29-5:2; Ex. 1021, ¶¶0039, 0088. A POSITA would have recognized that those signal(s) (which have current) are modulated/demodulated according to *Nakamura*'s teachings, which, in context of a POSITA's knowledge of known current modulation technologies/techniques (as exemplified above), would have motivated a POSITA to modify the *Nakamura-Berghegger* system to use "current modulation" to provide such indication-based information signals to apparatus 1. (Ex. 1002, ¶¶215-218.)

A POSITA would have had the motivation and skills to configure, and reasonable expectation of success in implementing, such a modification in the *Nakamura-Berghegger* system, especially given the teachings/suggestions in *Nakamura* (*e.g.*, including use of intensity modulated techniques to "express 0/1 information" (Ex. 1005, ¶0077)) and a POSITA's state-of-art knowledge of "current modulation" to facilitate data communications in inductively coupled systems like *Nakamura-Berghegger*. (Ex. 1002, ¶¶217-218.)

Thus, for the reasons above (and below), it would have been obvious to configure the *Nakamura-Berghegger* system such that the "**base unit** ("apparatus 1"), **and receiver coil** ("coil 12") **or circuitry associated therewith**" (*e.g.*, circuitry in secondary side circuit 13 associated with coil 12) to "**use current modulation performed by the receiver coil or its circuitry**" (*e.g.*, configure modulation circuit 45 and associated circuitry/components to perform "signal processing" and current modulation to generate/send modulated information signals to apparatus 1 via the coils 12 and 11x/11y/11z. (Ex. 1005, ¶¶0075, 0077; Ex. 1002, ¶218.) Moreover, circuit 36 in apparatus 1 would have been configured to properly demodulate such received modulated wave(s) to supply the "code" information to determination circuits 33-35 (Ex. 1005, ¶0078) "**to provide an indication**" (device information (*e.g.*, "power reception equipment" and/or "consumed power")) "**that is then used**

by the base unit" (*e.g.*, apparatus 1 uses the information to determine/verify presence (and proper positioning) of device 2/3 (and coil 12) and selectively provide power via the activated primary coil 11x/11y/11z). (*See* §§IX.A.1(a)-1(j) and *infra* (limitations 1(k)(1)-(2)); Ex. 1005, FIGS. 1-6, 13A-13E, ¶¶0062-0065, 0070-0075, 0076-0091; Ex. 1002, ¶218.)

As to **limitation 1(k)(1)**, *Nakamura* discloses determining the level of power to provide to a detected device 2/3 based on related device information. (*See* §§IX.A.1(a)-1(j); Ex. 1002, ¶¶219-220.) Thus, for reasons explained, the *Nakamura-Berghegger* system (as modified above) discloses/suggests the "**base unit**" (apparatus 1 with primary circuit 10) using the "**indication**" provided by the "**current modulation performed by the receiver coil or its circuitry**" (*see supra*) "**to determine and regulate one or more of output voltage, current, or power** (*e.g.*, by selecting an appropriate level of power, apparatus 1 regulates the output of power (voltage and current) by primary coil 11x/11y/11z) **provided by the base unit** (apparatus 1) **to the device and/or battery** (device 2/3 and/or its battery) **to be within the range of *one* or more of a value of a required voltage, current, or other power parameter for the mobile** [device]." (Ex. 1002, ¶¶219-221.) For example, the modulated information signal (*e.g.*, consumed power) informs apparatus 1 of the power requirements for device 2/3 so that the appropriate power

level (large/medium/small) is selected "depending on the power required by the power reception equipment" (Ex. 1005, ¶¶0017-0019), and thus is within a range of "one or more of" a value of a required voltage, current or other power parameter for device 2/3 (*e.g.*, a device requiring small power level would receive that level of power via the power transfer operations taught by *Nakamura*, which is within a range of "one or more of" a required voltage/current/power level). (Ex. 1002, ¶221.)

Nonetheless, even if not expressly disclosed, it would have been obvious to configure the above modified *Nakamura* system to determine/regulate output voltage, current, or power provided by apparatus 1 to the device/battery to be within a "range of one or more of a value of a required voltage, current, or other power parameter" to ensure the appropriate level of voltage/current/power is provided to the device/battery to avoid damage or insufficient performance during charging/powering operations. (*Id.*, ¶221.) A POSITA would have been motivated to configure/implement such features given the teachings of *Nakamura* and the knowledge of ensuring mobile device charging/powering operations are performed with minimal (or no) detrimental effects to the device/battery being charged/powered. (*Id.*)

As to **limitation 1(k)(2)**, the analysis above demonstrates how *Nakamura* discloses that the presence/alignment of device 2 (and receiver coil 12) is

continuously checked and **verified** during power/charge operations (*e.g.*, using the "**indication**" containing "code indicating being power reception equipment"), and thus *Nakamura* discloses this limitation. (*See* §§IX.A.1(f)-1(i); Ex. 1005, FIGS. 3-5, ¶¶0076-0083, 0086 ("after the power transmission is started…"), 0089-0091, 0096, 0109; Ex. 1002, ¶222.)

FIG. 4

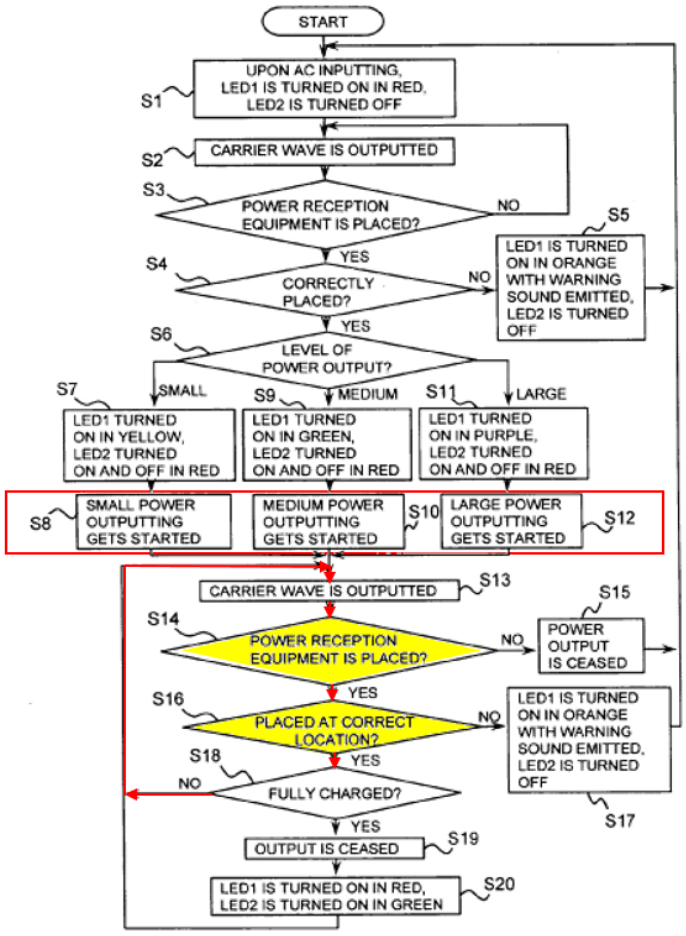

Thus, for these reasons and those discussed above in this section, as well as the disclosures in *Nakamura* (*see also* §§IX.A.1(a)-1(g)), the *Nakamura-Berghegger*

system (as modified above) discloses/suggests that the "**base unit** ("apparatus 1")**, and receiver coil** ("coil 12") **or circuitry associated therewith, use current modulation performed by the receiver coil or its circuitry, to provide an indication that is then used by the base unit to**" (*see* above) "**verify the continued presence of the receiver coil near the base unit**" (*see* above analysis and in §§IX.A.1(f)-1(i)), as claimed. (Ex. 1002, ¶¶223-224.)

2. Claim 18

a) The system of claim 1, wherein the charger system includes one or a plurality of LED's and/or audio signals that identify charging occurring or which of the plurality of primary coils are currently activated.

Nakamura in view of *Berghegger* discloses/suggests this limitation. (Ex. 1002, ¶¶225-230; §§IX.A.1.)

Apparatus 1 is equipped with "LED1 and LED2" that indicate "a state of power supply to power reception equipment, and other information." (Ex. 1005, ¶0063.) *Nakamura* explains how the system determines whether or not the "positional deviation" of device 2/3 "exceeds a predetermined value (Step S4)." (*Id.* FIG. 4, ¶0082.) If exceeded, no power transmission is performed and LED1 is turned on and LED 2 is turned off "as a warning indication (step S5)." (*Id.*) Also, "a ***warning sound*** may be emitted instead." (*Id.*) Also, depending on the determined power level, LED1 and LED2 are turned on and/or off in various ways. (*Id.*, ¶0084,

FIG. 4, ¶0089, FIG. 12 (below); Ex. 1002, ¶¶226-227.) While the "warning sound" features does not expressly disclose indicating "**charging occurring**," it would have been obvious to configure the *Nakamura-Berghegger* system to use similar "**audio signals**" to indicate when device 2/3 is being charged for similar reasons suggested by *Nakamura*'s LED or warning sound features (*e.g.*, to inform a user of certain actions/states (such as charging occurring).) (Ex. 1002, ¶¶228-228.)

FIG. 12

AC CONNECTION AND OPERATION CONDITIONS	LED1 DISPLAY	LED2 DISPLAY
WHEN AC PLUG IS NOT CONNECTED	OFF	OFF
WHEN AC PLUG IS CONNECTED	ON IN RED	OFF
WHEN AC PLUG IS CONNECTED WITH NO POWER TRANSMISSION	ON IN RED	OFF
WHEN AC PLUG IS CONNECTED WITH SMALL POWER TRANSMISSION (DURING CHARGING)	ON IN YELLOW	ON AND OFF IN RED
WHEN AC PLUG IS CONNECTED WITH MEDIUM POWER TRANSMISSION (DURING CHARGING)	ON IN GREEN	ON AND OFF IN RED
WHEN AC PLUG IS CONNECTED WITH LARGE POWER TRANSMISSION (DURING CHARGING)	ON IN PURPLE	ON AND OFF IN RED
WHEN AC PLUG IS CONNECTED WITH NO POWER TRANSMISSION IN FULL CHARGE	ON IN RED	ON IN GREEN
WHEN AC PLUG IS CONNECTED WITH POSITIONAL DEVIATION OF A PREDETERMINED VALUE OR MORE	ON IN ORANGE	OFF

Such features would have been implemented in the *Nakamura-Berghegger* system, and thus the combination discloses at least "**the charger system** (limitation 1(a)) **includes one or a plurality of LED's** (LED1, LED2) **and/or audio signals** (warning sound) **that identify charging occurring**" as claimed. (Ex. 1002, ¶¶229-230; §§IX.A.1(i)-1(k).)

B. Ground 2: Claims 1 and 18 are obvious over *Nakamura*, *Berghegger*, and *Hsu*

Nakamura alone or in combination with *Berghegger* discloses/suggests claims 1 and 18 for the reasons explained in Ground 1. (§§IX.A; Ex. 1002, ¶231-248.) Although the *Nakamura-Berghegger* system discloses/suggests the selectively switching and activating, polling or sensing, and selecting features as recited in claim 1 (*e.g.*, limitations 1(c), 1(g)-(h) (§§IX.A.1(c), IX.A.1(g)-(h))), it would have been obvious in light of *Hsu* to modify the *Nakamura-Berghegger* system to use an apparatus 1 with multiple primary coils and associated switching circuits that use polling to select appropriate coils to power a detected device 2/3 (as recited in limitations 1(c), 1(g)-(h)) to expand the applications/versatility of *Nakamura*'s system and how it verifies present and properly positioned/aligned devices to receive power. (Ex. 1002, ¶231.)

A POSITA would have had reasons and motivation to consider alternate configurations for the *Nakamura-Berghegger* system, given *Nakamura* teaches/suggests various implementations/applications for its power transfer system. (§IX.A.1(a); Ex. 1002, ¶232.) For example, the system can be configured with an array of apparatuses 1 having a plurality of primary coils that power/charge multiple devices, applicable to the configuration of FIG. 5 (among others). (§IX.A.1(a); Ex. 1005, FIGS. 13A-13E, 20, ¶¶0108, 0123.) Regarding FIG. 13C (below), multiple

apparatuses 1 can be embedded in a conference desk/table so that multiple (and different types) of mobile devices can be powered/charged, in accordance with features discussed for FIG. 5. (Ex. 1005, ¶¶0107-0109; Ex. 1002, ¶233.)

FIG. 13C

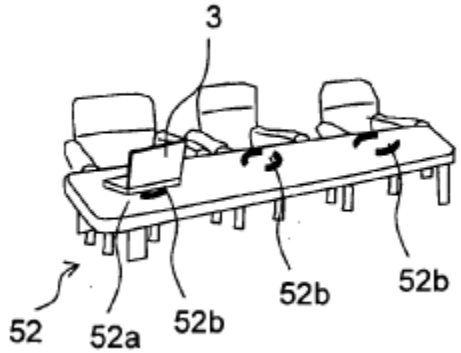

Further, regarding FIG. 20 (below), "plurality of apparatuses 1 are embedded [in a floor] in a similar manner to that shown in FIG. 13B" that provide power to a cleaning robot 98 (power reception equipment like device 2 "shown in one of FIGS. … 3, 5"). (*Id.*, ¶0123.)

FIG. 20

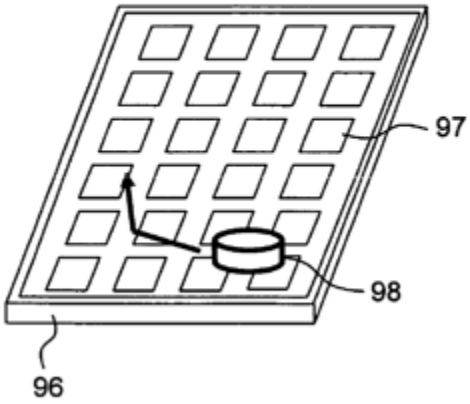

FIG. 13B

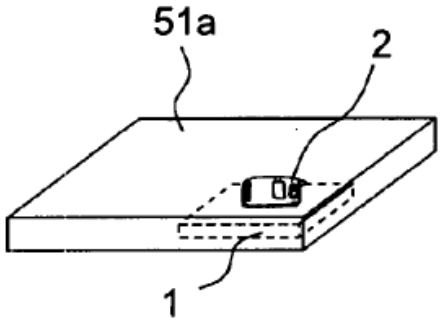

"Charging can be performed on other types of equipment such as notebook PCs" and apparatuses 1 "can be embedded in floor covering fabrics" (*e.g.*, rug/carpet/mat). (*Id.*, ¶0124; Ex. 1002, ¶235.) Given such versatility, a POSITA would have been motivated to contemplate/design/implement other variations that expanded the applications of *Nakamura-Berghegger*'s system, such as features described by *Hsu*. (Ex. 1002, ¶236.)

Hsu discloses a power/charging system for a mobile device (laptop/PDA, etc.) having a secondary coil placed on or near one or more primary coils in the surface of a powering device (*e.g.*, conference table/desk/powering pad, etc.). (Ex. 1007, Title, Abstract, ¶¶0002, 0006-0007, 0018-0025, 0029-0034.) *Hsu* is thus in the same field of endeavor, and addresses similar problems like those associated with, the '208 patent and *Nakamura-Berghegger*, and would have been considered in context of

the *Nakamura-Berghegger* system. (*E.g.*, Ex. 1007, ¶¶0006-0007, 0018-0025, 0029-0034; Ex. 1005, FIG. 5, ¶¶0020, 0090-0091; §IX.A.1(d); Ex. 1002, ¶¶237-239.)

Hsu discloses features that would have been applicable to improvements to the *Nakamura-Berghegger* system—*e.g.*, *Hsu* describes an inductive power system with a plurality of primary coils 26 (that can have different shapes) in a powering device 20 (*e.g.*, desk/pad/table, etc.) (Ex. 1007, ¶¶0018-0019, 0033, FIGS. 6, 8A-8B) that form a transformer with a secondary coil 25 in a portable device when placed on or near surface 21 of device 20 for powering/charging the device (*id.*, ¶¶0018-0021). Multiple primary coils can overlap with the secondary coil. (*Id.*, ¶0034.) (Ex. 1002, ¶240.)

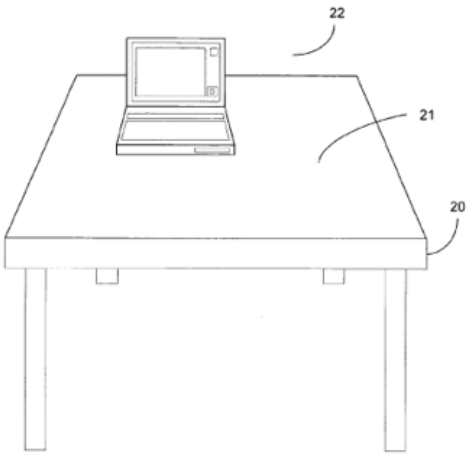

FIG. 1

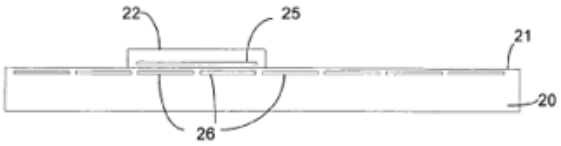

FIG. 2

(Ex. 1007, FIGS. 1-2.)

Powering device 20 can determine/verify the presence/location of the portable device using information from the portable device. (Ex. 1007, FIG. 5, ¶¶0021-0025, 0029.) *Hsu* performs a sensing mode, where primary coil 26 is driven to send signals that the portable device is tuned to receive, and, upon determining the presence/location of the device, performs a power transfer mode to provide power using inductive coupling. (*Id.*, FIG. 5, ¶¶0025-0029, ¶0029 (controller may "loop[]" through rows/columns of primary coils or use a desired scan "pattern"); Ex. 1002, ¶241.)

Each primary coil can be associated with one or more switching circuits that selectively switch/activate (*e.g.*, "turned on, i.e., energized or excited") one or more primary coils 26 based on the position/location of secondary coil 25 according to scanning ("**poll**") features. (Ex. 1007, FIG. 6 (annotated below), ¶0030; ¶¶0007, 0031-0032.)

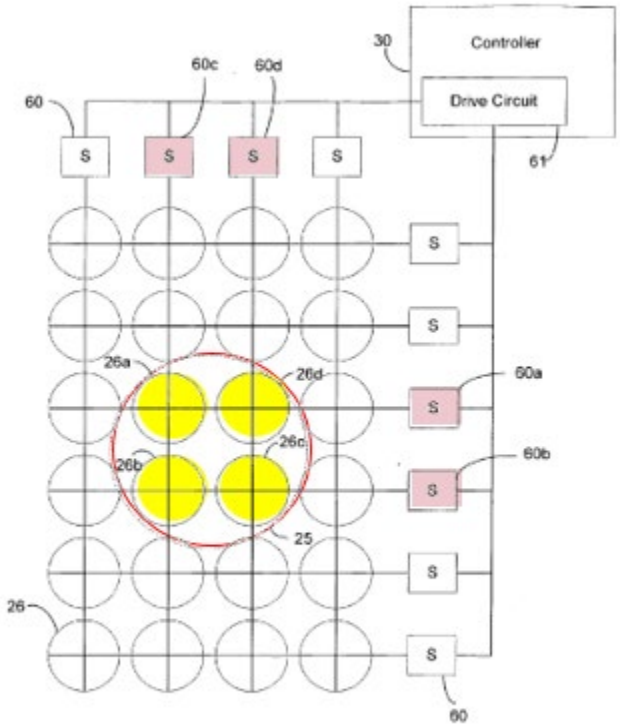

FIG. 6

As annotated above, four primary coils 26a-26d overlap with secondary coil 25, such that during the "scan phase," coils 26a-26d are identified using RFID transmissions (*id.*, ¶¶0021-0025, 0029 (secondary coil 25 picks up waves sent by overlapping primary coil(s) 26)), and switches 60a-60d are actuated to connect those coils to a drive circuit, thus energizing the coils 26 to facilitate power transfer to coil 25. (*Id.*, ¶0030; *id.*, ¶¶0007, 0020, 0029, 0034; Ex. 1002, ¶¶242-244.)

In view of *Hsu* in context of *Nakamura* (which contemplates similar configurations (embedded apparatus 1 in a desk/table/floor/mat/rug, etc. (which also

can be a "**base unit**")), a POSITA would have been motivated, and found obvious, to modify the *Nakamura-Berghegger* system to use a plurality of primary coils in such a "**base unit**" (*e.g.*, embedded apparatus 1) to expand the applications of the system and add versatility in device placement for receiving power. (Ex. 1002, ¶245.) A POSITA would have recognized the benefits/advantageous of such modification based on *Hsu*. (*Supra*; Ex. 1007, ¶¶0003-0007.) A POSITA would have further leveraged *Hsu*'s teachings/suggestions to employ scanning/polling functionalities that use associated switching circuits to aid in determining the location/position/presence of a secondary coil 12 in device 2/3 that overlaps one or more primary coils (*e.g.*, coils 11 as modified in an array, etc. in apparatus 1/desk/table/mat/rug/floor), similar to that disclosed by *Hsu*/*Nakamura*, and known in the art (Ex. 1034, ¶¶0044-0045 (polling operations)), to accurately detect/verify aligned primary coils so that only those coils are selectively activated to provide power to device 2/3. (Ex. 1002, ¶246.) Such a modification would have predictably resulted in the *Nakamura-Berghegger-Hsu* system including features and performing functionalities like those recited in claim 1, including the selectively switching/activating features and polling features recited in limitations 1(c), 1(g)-(h). (*Id.*; §IX.A.)

A POSITA would have appreciated the various ways that the *Nakamura-Berghegger-Hsu* system would have been configured while providing improved and efficient power transfer consistent with that contemplated by *Nakamura* as modified by *Berghegger*. (§IX.A; Ex. 1002, ¶247.) In one non-limiting example, a POSITA would have been motivated to modify the *Nakamura-Berghegger* system to operate consistent with *Nakamura*'s FIG. 3 configuration (*e.g.*, using taps on a single coil 11 to provide various power levels (Ex. 1005, FIG. 3, ¶¶0067-0089)) but further configured such that a plurality of such primary coils ("**plurality of primary coils**") were used that would be selectively activated based on determined (via "**polling**") overlapping presence with device 2/3, consistent with features disclosed/suggested by *Hsu*. (Ex. 1002, ¶247.)[8] Such a configuration would have allowed the modified system to selectively activate primary coils, while also providing appropriate power levels consistent with *Nakamura*'s teachings. (*Id.*; Ex. 1005, ¶¶0006-0007, 0062-0089; 0096-0124.)

[8] The FIG. 3 *Nakamura* configuration operates consistently with that of FIG. 5 (*albeit* with a single coil) and thus would have been equally modified based on *Berghegger* for reasons explained in §IX.A.1(d). (Ex. 1002, ¶247.)

A POSITA would have had the skills/knowledge/rationale to configure, and had a reasonable expectation of success in implementing, the modification(s), especially given such modification(s) would have involved applying known technologies/techniques, like those described by *Nakamura-Berghegger-Hsu* to yield the predictable result of providing an inductive power system with a "base unit" (*e.g.*, embedded apparatus 1) with an array/matrix of primary coils that are selectively activated (via associated switch circuits and polling techniques) to efficiently provide power to a mobile device placed near or on overlapped primary coils, consistent with the functionalities/features provided in the above-discussed *Nakamura-Berghegger-Hsu* system. (*Id.*, ¶248; §IX.A.) *KSR* at 416.

C. Ground 3: Claims 1 and 18 are obvious over *Nakamura*, *Berghegger*, and *Odendaal*

Nakamura (alone or as modified in view of *Berghegger*) discloses/suggests claims 1 and 18 (limitations 1(a), 1(c)-1(k)) for reasons explained in Ground 1. (Ex. 1002, ¶¶249-266; §§IX.A.1(a), 1(c)-1(k), IX.A.2.)

As explained, *Nakamura* also discloses **limitation 1(b)**. (Ex. 1002, ¶¶249-250; §IX.A.1(b).) However, to the extent *Nakamura* does not disclose each of the primary coils being "**arranged behind and parallel to the surface**" and "**positioned within the base unit**," as recited in limitation 1(b), a POSITA would have found it obvious to configure the *Nakamura* system (including as modified in

view of *Berghegger*) to implement and use thin, planar-type primary coils that are positioned within *Nakamura*'s apparatus 1 ("**base unit**") and arranged behind and parallel to the surface of apparatus 1 (and complement such a design with corresponding planar-type secondary/receiver coil(s) in device 2/3) in light of the teachings/suggestions of *Odendaal*, complemented by a POSITA's knowledge in the art. (Ex. 1002, ¶251.)

A POSITA was aware of different types of inductive coil designs/options for power/data transfer, including related circuitry, tradeoffs, benefits/advantages, etc. associated with their use—*e.g.*, planar coils were known, as were their characteristics and design techniques implementing circuits/systems/devices that use them to achieve desired applications of contactless/inductive power/data transfer. (*Id.*, ¶252.) Several state of the art references exemplify such knowledge. (*Id.*, ¶¶253-256; Ex. 1027, 1-3 (planar spiral inductor); Ex. 1015, FIGS. 1-2, 3-4, 7-12, Abstract, 1:5-2:29, 2:64-3:27, 3:39-51 (thin coil, flat disc-like core), 5:5-47, 5:48-9:5; Ex. 1007 (*see* discussion in Section IX.B); Ex. 1025, FIGS. 1, 3, 8-9, 13, 1:10-2:3, 2:5-12 (reasons to consider thin coil designs), 2:14-3:2, 4:19-32, 7:25-9:28, 12:27-32 (very thin printed coil), 14:4-17; Ex. 1026, FIGS. 1-2, 5 (conventional primary coil array arrangement), 9A-9C, Abstract, 1:3-4:4 (conventional designs), 4:6-9:4, 11:4-15 (concentric selectively active flat coils); Ex. 1009, Abstract, FIGS.

1-3, 1:4-51, 1:54-2:26, 2:47-3:8 (flat configurations), 3:9-39 (thin flat coil), 4:18-60; Ex. 1024, FIGS. 3, 8-9, 1:12-15, 1:39-2:29, 9:41-53, 10:45-57, 11:60-13:4; Ex. 1028, Abstract, FIGS. 2-7, ¶¶0001, 0004-0007, 0025-0032, 0041; Ex. 1029, 1-4, 9-19 (planar, spiral coils); Ex. 1030, FIGS. 3-7B, 1:5-9, 1:59-61, 3:19-56, 4:62-567, 5:25-44; Ex. 1004, 166-236 (WO2003/105308) (planar inductive battery charger with PCB spiral planar primary coil substantially parallel to planar charging surface), 237-284 (WO2005/109598), 875.)

A POSITA would have leveraged such knowledge when considering design/implementation options for the *Nakamura* system, and appreciated how various coil designs (including planar coils) would have improved the system based on given applications, taking into account factors, *e.g.*, size/weight, cost, efficiencies/performance, application, etc. and considered potential tradeoffs/benefits provided by planar coils when contemplating ways to design/implement apparatus 1 / device 2/3. (Ex. 1002, ¶256; Ex. 1007, ¶0033 (describing size/shape attributes of coils and known characteristics in an inductive power/charge system).) One source of such guidance is *Odendaal*.

Odendaal is in the same field of endeavor as the ’208 patent and *Nakamura-Berghegger* and addresses similar problems, given it also describes an inductive power/charging system that powers/charges a mobile device (*e.g.*,

cellphone/computer, etc.) having a secondary coil placed on/near the primary coils in the surface of a powering device (*e.g.*, cellphone charger, pad, embedded charger in a thin surface (*e.g.*, fabrics), etc.). (§IX.A.1(d); Ex. 1008, Abstract, FIGS. 1A-4, 11, 12, 1:5-3:57, 4:50-5:28, 6:59-64; Ex. 1005, ¶¶0006-0007, 0020, 0062-0094, 0102-0124; Ex. 1006, Abstract, 1:65-3:30, 5:27-30, 6:12-45; Ex. 1002, ¶¶94-96, 257-258.)

Odendaal discloses features that would have been applicable to improvements to the *Nakamura-Berghegger* system. (Ex. 1002, ¶259.) For example, *Odendaal* discloses the known use of planar-type primary-side and secondary/receiver-side inductor coils for use in a contactless/inductive power transfer system that transfers power via magnetic coupling for, *e.g.*, charging a battery of a cellphone/computer/wearable items, etc. (Ex. 1008, FIGS. 1A-1B, 2A, 2C, 8E, 1:58-3:5.) *Odendaal* explains that the planar power resonator of the "interface-of-energy-transfer" (IOET) of the planar power resonator "may have a thin and/or relatively flat top coil surface" and may have coils arranged in upper and lower configurations with an air gap. (*Id.*, 2:44-54.) "The spiral-shaped conductor may comprise ***pcb spiral-wound conductors***" and "a battery charging circuit can be coupled to one of the **first and second spiral shaped conductors**, and load can be coupled to the other…" where "coupling between the battery charging circuit and the battery may

comprise…***and/or magnetic coupling, wherein power is transferred by the coupling of…and/or magnetic flux across the IOET***." (*Id.*, 2:55-64; *id.*, 2:1-15 (transferring power across IOET "in **either** an electric **or magnetic form**, or both" and "**transformer action** with or **without** capacitive energy transfer"), 2:65-3:5 (signal transfer between spiral coils "by coupling of magnetic flux"), 4:44-5:8, 6:1-18 (air coil transformer); Ex. 1002, ¶¶259-260.)

Accordingly, a POSITA would have understood *Odendaal* discloses inductive/contactless power system designs/configurations that use planar coils where planar primary coil(s) are arranged behind and parallel to the surface of a base unit (and planar secondary/receiver coil(s) are arranged/implemented in a device to be powered/charged (*e.g.*, cellphone/computer)), consistent with that known in the art. (Ex. 1002, ¶261; Ex. 1008, 1:23-31, 1:60-67, 2:16-28, 2:29-44 (coils embedded in fabric or pads), 2:55-64, 3:3-5 ("The **first and second spiral-shaped conductors** and the IOET are preferably integrated into **a planar (flat/thin) structure**."), 3:65-67 (spirals arranged within substrate material); state-of-art evidence above.)

The teachings/suggestions of *Odendaal* in context of the disclosures in *Nakamura-Berghegger*, complemented with knowledge in the art, would have motivated a POSITA to modify the *Nakamura-Berghegger* system/device to use planar primary coil(s) in the "**base unit**" (and in the mobile device 2/3) to increase

the versatility in the designs/arrangements compatible with various thin-form applications contemplated by *Nakamura*. (Ex. 1002, ¶262.) As explained in Grounds 1-2, *Nakamura* discloses different applications for the inductive power/data transfer system (*see* discussion of *Nakamura* in §§ IX.A.1, IX.B). A POSITA would have been motivated to consider/implement planar coils to facilitate and/or expand the versatility of applications contemplated by *Nakamura*, which utilize thin, compact, and/or planar-type designs/arrangements (some shown below—*e.g.*, apparatus 1 embedded in the surface of a desk/table/locker/shelf/dashboard/mat/floor/rug, etc., cellphone/laptop 2/3, etc.) (Ex. 1002, ¶262; Ex. 1005, ¶¶0062-0075, 0090-0094, 0096-0156; *id.*, FIGS. 1A-2B, 8-9, and 13A-20 (apparatus 1 embedded in thin planar-type host units, where reduced thickness of primary coil(s) would have benefited the corresponding thickness/profile of apparatus 1 and hosts), FIGS. 2A and 9 (thickness of the receiver/secondary coil placed near the device/cellphone's back panel affecting thickness of the device/cellphone), ¶¶0070 ("IC 24" of apparatus 1 "is an IC including [circuits 31-37], and ***takes on a shape of an IC chip for achieving a compact and lower-profile shape***"), 0075 ("IC 42 is in the shape of an IC chip so that ***a compact and lower-profile shape of the portable telephone 2 is achieved***").)

FIG. 1A

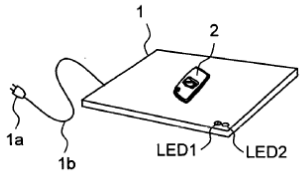

FIG. 1B

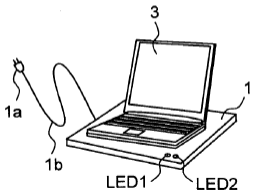

FIG. 8

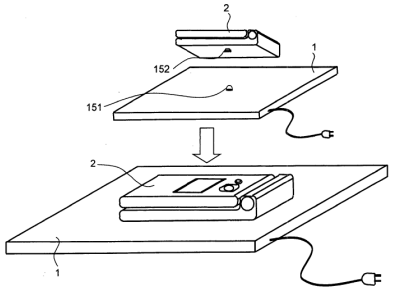

FIG. 13B

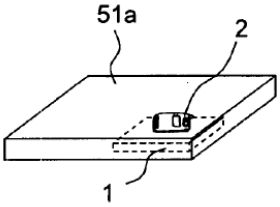

FIG. 13C

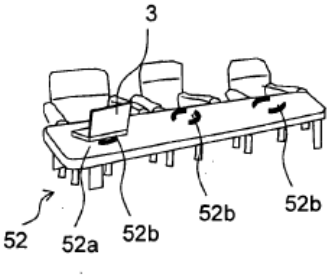

FIG. 13E

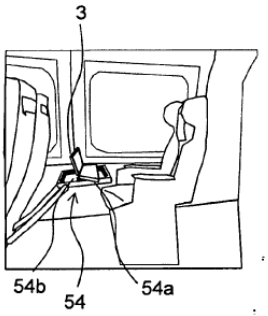

FIG. 14

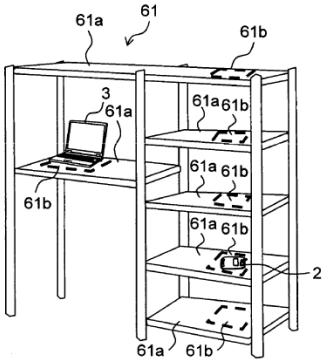

FIG. 15B

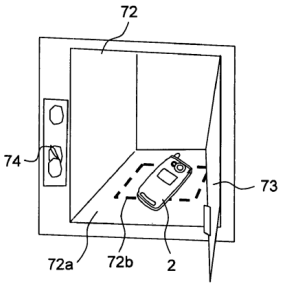

FIG. 18

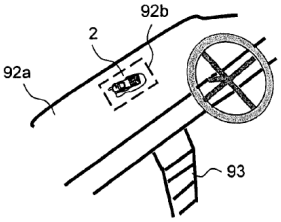

FIG. 19

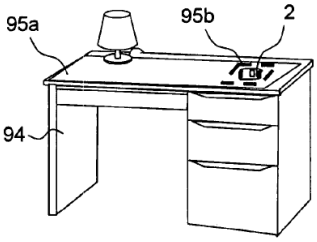

FIG. 2A

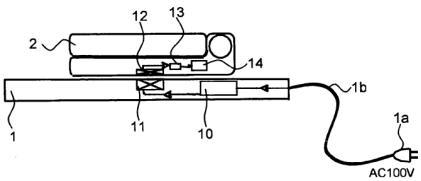

FIG. 9

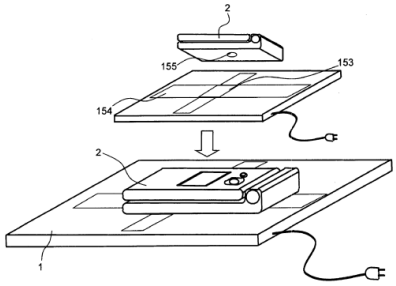

Odendaal also discloses the use of thin, planar-type coils in similar thin, compact, and/or planar-type designs/arrangements (e.g., fabrics/pads, cellphones/computers, etc.) (*Supra*; Ex. 1008, 1:58-3:5; Ex. 1002, ¶262.) A POSITA would have appreciated the benefits thin, planar-type coils would have provided to *Nakamura*'s modified system/device, such as expanding applications to provide thin form factors, which were applicable to implementations for pad/desk/table/shelf/mat/floor/fabric, etc. based designs for powering/charging various devices, such as thin/compact mobile devices/cellphones/laptops. (Ex. 1002, ¶263.)

Such knowledge was consistent with that known in the art and with the teachings/suggestions in *Odendaal*. (*Id.*, ¶¶50-53, 263; *see* above-cited state-of-art evidence.) Moreover, a POSITA would have been motivated and found obvious to configure the modified system with planar coils that would increase coupling areas between primary and secondary/receiver coils to improve efficiency/effectiveness of inductive power transfer (Ex. 1005, ¶¶0079-0082), which would have also been beneficial for configurations where apparatus 1 is embedded in desks/tables/shelves/floors/carpets, etc., by allowing device 2/3 to be charged at different parts of such surfaces (*id.*, ¶0159). (Ex. 1002, ¶263.)

Furthermore, a POSITA would have appreciated that complementing primary-side planar coil(s) with secondary/receiver-side planar coil(s) would have provided for efficient energy transmission between the charger and receiver devices, especially where the coils were aligned to allow the perpendicular magnetic field generated by the primary coil(s) to be efficiently received by the receiving coil(s). (Ex. 1002, ¶¶53, 263.)

Accordingly, a POSITA would have been motivated by *Odendaal*'s teachings/suggestions (coupled with state-of-art knowledge) to configure the *Nakamura-Berghegger* system for applications employing planar, spiral, thin-type primary coils 11 and secondary/receiver coils 12 to expand the applications consistent with those contemplated by *Nakamura*. (Ex. 1002, ¶264.) Such a modification would have predictably resulted in the *Nakamura-Berghegger-Odendaal* system including features and performing functionalities like those recited in claim 1, where a plurality of primary coils were positioned within the base unit, and arranged behind and parallel to the base unit surface, like that recited in limitation 1(b) (and secondary/receiver coil(s) in mobile device 2/3 were configured as planar coil(s)). (*Id*.) Also, the *Nakamura-Berghegger-Odendaal* modified system would have resulted in a magnetic field generated by the planar type activated primary coil(s) in a direction **substantially perpendicular** to the surface of

apparatus 1 ("**base unit**") and to the plane of the primary coils, consistent with that known in the art, and as recited in limitations 1(c) and 1(e). (*Id.*) Indeed, consistent with known planar coil designs and with *Nakamura*'s teachings (Ex. 1005, ¶¶0079-0083), a POSITA would have been motivated to configure the modified system such that when the primary planar coil(s) is/are aligned with the (planar) secondary/receiver coil in the modified *Nakamura* system to maximize magnetic coupling (energy transfer), a substantially perpendicular magnetic field relative to the surface/plane of the apparatus 1 (base unit) and primary coil(s) would be generated/received by the secondary coils. (Ex. 1002, ¶264.)

The *Nakamura-Berghegger-Odendaal* system would have been configured in various ways while still providing the power/data transfer functionalities discussed above. (Ex. 1002, ¶265; §IX.A.1.) For instance, the modified system may have been configured with planar primary coils 11x/11y/11z that would have been selected, configured, and/or designed with corresponding circuitry to ensure appropriate power is provided to device 2/3 (with planar secondary/receiver coil(s) 12) depending on the power requirements for the device, like that explained in Ground 1 and discussed in *Nakamura*. (Ex. 1002, ¶265.) A POSITA would have considered the tradeoffs with different designs (*e.g.*, due to

costs/weight/complexity/efficiencies, etc.) to design/implement a modified system appropriate for a given application. (*Id.*)

Implementing the above modification would have involved applying known technologies/techniques (*e.g.*, known planar coils and related circuitry (*e.g.*, *Odendaal*, state-of-art evidence above) with inductive power transfer/charging systems (*Nakamura*/*Berghegger*/*Odendaal*)) to yield the predictable result of providing a thin form factor/"compact and lower-profile shape" (Ex. 1005, ¶¶0070, 0075) "base unit" and device 2/3 that provide power/charging operations like that discussed above for the *Nakamura-Berghegger* system in Ground 1. (Ex. 1002, ¶266; §IX.A.) *KSR* at 416.

D. Ground 4: Claims 1 and 18 are obvious over *Nakamura*, *Berghegger*, *Odendaal*, and *Hsu*

The *Nakamura-Berghegger-Odendaal* combination discloses/suggests claims 1 and 18 for reasons explained in Grounds 1 and 3. (Ex. 1002, ¶¶267-270; §§IX.A, IX.C.) Ground 2 also explains how/why it would have been obvious to modify the *Nakamura-Berghegger* combined system in light of *Hsu* in a manner that discloses/suggests the limitations of claims 1 and 18 (*e.g.*, array of primary coils that would have been selectively activated via switching circuit(s) using polling/sensor features like that recited in limitations 1(c), 1(g)-1(h), among others). (§IX.B.) Accordingly, for the same reasons/rationale and teachings/suggestions explained in

Grounds 1-3, a POSITA would have been motivated and found obvious to configure and modify the above-discussed *Nakamura-Berghegger-Odendaal* system with features similar to those taught/suggested by *Hsu* in a manner that discloses/suggests, and renders obvious, claims 1 and 18. (§§IX.A-IX.C; Ex. 1002, ¶¶268-269.)

A POSITA would have had similar reasons and motivations to consider the teachings of *Hsu* collectively with those of *Odendaal* and *Berghegger* when contemplating the design/configuration of the *Nakamura* system, and done so with a reasonable expectation of success that the modifications would have performed functionalities as intended, consistent with the goals/operations of *Nakamura* and with the functionalities/features provided in the above-discussed *Nakamura-Berghegger-Odendaal* and *Nakamura-Berghegger-Hsu* systems as explained in Grounds 1-3. (*Id.*, ¶270.)

E. Ground 5: Claims 1 and 18 are obvious over *Nakamura*, *Berghegger*, and *WangII*

The *Nakamura-Berghegger-WangII* combination discloses/suggests the limitations of claims 1 and 18. (Ex. 1002, ¶¶271-277.)

As explained, *Nakamura* (alone or as modified in view of *Berghegger*) discloses/suggests limitations 1(a)-1(c), 1(e)-1(k), and claim 18 for the reasons

explained in Ground 1. (Ex. 1002, ¶¶271-272; §§IX.A.1(a)-(c), IX.A.1(e)-1(k), IX.A.2.)

Further, as explained in Ground 1, *Nakamura* in view of *Berghegger* discloses and/or suggests limitation 1(d). (§IX.A.1(d).) In addition to the teachings/suggestions of *Berghegger*, a POSITA would have been further motivated to configure the "**base unit**" in the above-discussed modified *Nakamura* system to include a capacitive or other component that decreases harmonics in the activated primary coil of the system in light of teachings/suggestions of *WangII*.[9] (Ex. 1002, ¶272.)

For example, beyond *Berghegger*, a POSITA would have been motivated to consider the teachings/suggestions of *WangII* for reasons similar to those explained above for considering *Berghegger* for limitation 1(d) in Ground 1. (§IX.A.1(d); Ex. 1002, ¶273.) *WangII* discloses a contactless/inductive power transfer system for powering a remote device via magnetic coupling. (Ex. 1013, Abstract, FIGS. 1, 2-3, 6, 4:29-5:13.) *WangII* also describes configurations that use switch(es) loaded by

[9] *WangII* was referenced as supporting state-of-art evidence in Ground 1. (Section IX.A.1(d).) Here, *WangII* is relied upon in Ground 5 as prior art consistent with *Berghegger*.

a capacitor coupled to a primary coil providing wireless power to a secondary coil that reduces harmonics in the signals generated by the primary coil, consistent with that known in the art. (*See* discussion of Ex. 1013 in §IX.A.1(d); Ex. 1013, Abstract, FIGS. 1, 2-3, 6, 3:29-4:5, 4:19-5:7 ("reduce harmonics and eddy current"), 7:24-8:14, 8:17-23 ("little high order frequency content"), 8:24-31, 9:26-12:27; Ex. 1002, ¶¶97-99, 274-275.)

Such additional teachings/suggestions are consistent with a POSITA's knowledge of the time, including those demonstrated by *Berghegger*. (§IX.A.1(d); Ex. 1002, ¶¶276-277.) As such, a POSITA would have been further motivated by such teachings/suggestions in *WangII* to configure apparatus 1 ("**base unit**") in the *Nakamura* system to include a capacitive or other component that decreases harmonics in the activated primary coil to improve efficiencies in power transfer between the primary and secondary coils and/or promote efficient processing of the information signal provided by apparatus 1 to mobile/electronic device 2/3, used to initiate the generation/transmission of the information signals used by apparatus 1 to control the powering/charging of mobile device 2/3 or its battery, as explained above for claim 1. (*See, e.g.*, Sections IX.A.1(a)-(k); Ex. 1002, ¶¶276-277.) A POSITA would have had similar motivation/rationale and expectation of success in considering/designing/implementing such features as those explained for the

modification based on *Berghegger*, coupled with the additional express teachings/suggestions by *WangII* as discussed above. (§IX.A.1(d).) (Ex. 1002, ¶277.)

F. Ground 6: Claims 1 and 18 are obvious over *Nakamura*, *Berghegger*, *WangII*, *Odendaal*, and *Hsu*

The *Nakamura-Berghegger-WangII-Odendaal-Hsu* combination discloses/suggests the limitations of claims 1 and 18. (Ex. 1002, ¶¶278-281.) Ground 4 demonstrates how *Nakamura*, as modified in view of *Berghegger*, *Odendaal*, and *Hsu* discloses and/or suggests the limitations of claims 1 and 18. (§IX.D; §§IX.A-IX.C (referenced in Ground 4); Ex. 1002, ¶279.) Ground 5 explains how the *Nakamura-Berghegger-WangII* combination discloses and/or suggests the limitations of claims 1 and 18, in particular regarding limitation 1(d). (§IX.E; Ex. 1002, ¶279.)

Accordingly, for the same reasons/rationale/teachings/suggestions explained in Grounds 1-5 (including those for limitation 1(d) in §§IX.A.1(d), IX.E), a POSITA would have been further motivated, and found obvious, to configure and modify the *Nakamura-Berghegger-Odendaal-Hsu* system to configure apparatus 1 ("**base unit**") to include a capacitive or other component that decreases harmonics in the activated primary coil of the system in light of the additional teachings/suggestions of *WangII*. (§§IX.A-IX.E; *see* discussion of *WangII* in §IX.A.1(d); Ex. 1002, ¶280.)

A POSITA would have had the same motivation/rationale/skills/knowledge and reasonable expectation of success to consider/modify *Nakamura*'s modified system (in light of *Berghegger*, *Odendaal*, and *Hsu* (as explained for Grounds 1-4)) based on the additional teachings/suggestions in *WangII* (consistent with *Berghegger* and the state-of-art knowledge) to implement features like those recited in limitation 1(d) as those explained above in §§IX.A.1(d) and IX.E. (Ex. 1002, ¶281.)

Accordingly, for similar reasons explained here/above, the combined teachings/suggestions of *Nakamura-Berghegger-WangII-Odendaal-Hsu* render obvious claims 1 and 18.

X. DISCRETIONARY DENIAL IS NOT APPROPRIATE[10]

Discretionary denial under Section 325(d) is not appropriate here given the prior art combinations and arguments raised during prosecution are not the same or substantially similar to the grounds presented herein. For instance, the Office did not consider *Nakamura* alone or in light of *Berghegger*, *Odendaal*, *Hsu*, and/or *WangII*. (*See generally* Ex. 1004; Ex. 1001, Cover.) *See* IPR2022-00158, Paper 7 at 24 (P.T.A.B. Apr. 4, 2022). *Nakamura* discloses multiple primary coils, verifying the presence/alignment of a device/secondary coil, and selecting a primary coil based on information transmitted by the device. (§IX.) During prosecution, the examiner presented obviousness positions modifying prior art (*Hui*) to include a communications unit (*e.g.*, Ex. 1004, 579). In contrast, *Nakamura* discloses such features. (§IX.A.) Further, the examiner's obviousness positions focusing on use of a magnet to facilitate coil alignment is unrelated to the positions asserted here. (Ex. 1004, 574-575; §§IX.A-F.) Moreover, limitations 1(c)-1(d) that the examiner eventually conceded in response to PO's amendments (*e.g.*, Ex. 1004, 539, 549-552,

[10] Petitioner reserves the right to address any discretional denial arguments PO may raise concerning discretionary denial.

573-575, 603, 612-613, 685, 694-695; *id.*, 38, 288, 491, 508)[11] are disclosed and/or suggested by the prior art asserted herein. (§§ IX.A-F.)

Further, the *Fintiv* factors do not justify denying institution. *Apple Inc. v. Fintiv, Inc.*, IPR2020-00019, Paper 11 (P.T.A.B. Mar. 20, 2020) (precedential).

The **first factor** (stay) is neutral, because Samsung has not yet moved for a stay. *See Hulu LLC v. SITO Mobile R&D IP, LLC et al.*, IPR2021-00298, Paper 11 at 10-11 (P.T.A.B. May 19, 2021).

The **second factor** (proximity) is neutral. "The PTAB will weigh this factor against exercising discretion to deny institution under *Fintiv* if the median time-to-trial is around the same time or after the projected statutory deadline for the PTAB's final written decision" (FWD). (Ex. 1031, 9.) The median time from filing to trial in the Eastern District of Texas is 19 months, meaning trial will be *no earlier* than May 2024 (Ex. 1032, 35), which is consistent with the court's scheduled jury selection for August 5, 2024 (Ex. 1033, 1). With this petition filed in June 2023, a FWD may be expected by December 2024, not long after the trial date.

---

[11] The Applicant identified numerous prior art references after notices of allowances, none of which were substantively applied by the examiner. (*E.g.*, Ex. 1004, 36, 72, 287, 294, 491.)

That the FWD may come after the trial date is not dispositive. The Board has granted institution in cases where the FWD issued months after the scheduled trial date. The Board has relied on various justifications, such as diligence in filing the petition, a stipulation not to pursue the asserted grounds in litigation, minimal investment in litigation, and whether the merits of the invalidity challenge were strong. *Verizon Business Network Services, Inc. v. Huawei Techs. Co*., IPR2020-01141, Paper 12 (Jan. 14, 2021). The same factors are present in this case. For instance, Petitioner diligently filed this petition (challenging long, convoluted claims) in advance of the one-year bar date and within four months of PO's infringement contentions in the Texas Litigation. (Ex. 1022.) Fact discovery is not anticipated to close until March 18, 2024. (Ex. 1033, 3.) Expert discovery has not yet started. (*Id.*) And the *Markman* hearing is not scheduled until February 6, 2024, after the filing of this petition. (*Id.*)

The **third factor** (investment) also weighs against denial. The district court case is in the early stages. Fact discovery is in its infancy and the parties have not engaged in expert discovery. (Ex. 1033, 3.) The parties have not yet identified terms for construction. (*Id.*, 3-4.) Nor have there been any substantive orders in this case.

The **fourth factor** (overlap) also weighs against denial. Petitioner hereby stipulates that, if the IPR is instituted, Petitioner will not pursue the IPR grounds in

the district court litigation. Thus, "[i]nstituting trial here serves overall system efficiency and integrity goals by not duplicating efforts and by resolving materially different patentability issues." *Apple, Inc. v. SEVEN Networks, LLC*, IPR2020-00156, Paper 10 at 19 (P.T.A.B. June 15, 2020); *see also Sand Revolution II, LLC v. Continental Intermodal Group-Trucking LLC*, IPR2019-01393, Paper 24 at 12 (P.T.A.B. June 16, 2020). Moreover, PO has asserted claim 1 of the '208 patent, whereas this Petition challenges claims 1 and 18, so the Texas Litigation will not resolve all disputed validity issues. (§§IX.A.2; IX.B-E.)

While the **fifth factor** (parties) may weigh slightly in favor of denial, because the Petitioner and PO are the same parties as in district court, based on a "holistic view," the factors favor institution. *Samsung Elecs. Co. Ltd. v. Dynamics Inc.*, IPR2020-00505, Paper 11 at 15 (P.T.A.B. Aug. 12, 2020).

Even if the Board determines that the above factors favor denial, the Board should not discretionarily deny institution, because this petition presents compelling merits. *See CommScope Techs. LLC v. Dali Wireless, Inc.*, IPR2022-01242, Paper 23 at 4-5 (P.T.A.B. Feb. 27, 2023) (precedential). As discussed above (§§VII, IX) and demonstrated in the file history (Ex. 1004), the Examiner found most claim features in the prior art, and the selectively switching and decreasing harmonics features that resulted in allowance (§VII), were known in the art and are met by the

prior art presented here. The remaining features were likewise known in the art, and in fact, are largely concepts prevalent in inductive power systems. (§IX) Moreover, this Petition is the ***sole*** challenge to the '208 patent before the Board—a "crucial fact" favoring institution. *Google LLC v. Uniloc 2017 LLC*, IPR2020-00115, Paper 10 at 6 (May 12, 2020).

XI. CONCLUSION

Accordingly, Petitioner requests institution of IPR for the challenged claims based on the specified grounds.

Respectfully submitted,

Dated: June 27, 2023

By: /Joseph E. Palys/
Joseph E. Palys (Reg. No. 46,508)
Counsel for Petitioner

CERTIFICATE OF COMPLIANCE

Pursuant to 37 C.F.R. § 42.24(d), the undersigned certifies that the foregoing Petition for *Inter Partes* Review of U.S. Patent No. 7,948,208 contains, as measured by the word-processing system used to prepare this paper, 13,994 words. This word count does not include the items excluded by 37 C.F.R. § 42.24 as not counting towards the word limit.

Respectfully submitted,

Dated: June 27, 2023

By: /Joseph E. Palys/
Joseph E. Palys (Reg. No. 46,508)
Counsel for Petitioner

CERTIFICATE OF SERVICE

I hereby certify that on June 27, 2023, I caused a true and correct copy of the foregoing Petition for *Inter Partes* Review of U.S. Patent No. 7,948,208 and supporting exhibits to be served via express mail on the Patent Owner at the following correspondence address of record as listed on Patent Center:

NK PATENT LAW
4101 LAKE BOONE TRAIL
SUITE 218
RALEIGH, NC 27607
UNITED STATES

By: /Joseph E. Palys/
Joseph E. Palys (Reg. No. 46,508)