US 20050068019A1

(19) United States

(12) Patent Application Publication

(10) Pub. No.: US 2005/0068019 A1

(43) Pub. Date: Mar. 31, 2005

Nakamura et al.

(54) POWER SUPPLY SYSTEM

(75) Inventors: **Junichi Nakamura**, Kashiba-Shi (JP); **Masahiro Kawamura**, Kitakatsuragi-Gun (JP); **Yutaka Okada**, Yamatokoriyama-Shi (JP); **Takeshi Morimoto**, Osaka (JP)

Correspondence Address:
NIXON & VANDERHYE, PC
1100 N GLEBE ROAD
8TH FLOOR
ARLINGTON, VA 22201-4714 (US)

(73) Assignee: **SHARP KABUSHIKI KAISHA**, Osaka (JP)

(21) Appl. No.: **10/947,425**

(22) Filed: **Sep. 23, 2004**

(30) **Foreign Application Priority Data**

Sep. 30, 2003 (JP) 2003-340631
Sep. 30, 2003 (JP) 2003-340772
Sep. 30, 2003 (JP) 2003-341350

Publication Classification

(51) **Int. Cl.**[7] **H02J 1/00**

(52) **U.S. Cl.** **323/355**

(57) **ABSTRACT**

A power supply system according to the present invention comprises: a primary side coil; a power transmission apparatus having a primary side circuit for feeding a pulse voltage resulted from switching a DC voltage which is obtained by rectifying and smoothing a commercial power supply to the primary side coil; a secondary side coil magnetically coupled to the primary side coil; and power reception equipment having a secondary side circuit for rectifying and smoothing voltage induced across the secondary side coil, wherein there is provided a power adjusting section for adjusting a level of power to be transmitted according to power required by the power reception equipment. The power adjusting section has, in the primary side circuit, a carrier wave oscillation circuit for supplying a carrier wave to the primary side coil, a demodulation circuit for demodulating a modulated signal transmitted from the secondary circuit and received by the primary side coil, and a power change-over section for selecting a level of power to be transmitted according to an information signal from the power reception equipment and demodulated by the demodulation circuit. The power adjusting section has, in the secondary side circuit, a modulation circuit for modulating the carrier wave fed from the carrier wave oscillation circuit and received by the secondary side coil with the information signal from the power reception equipment and transmitting the modulated signal.

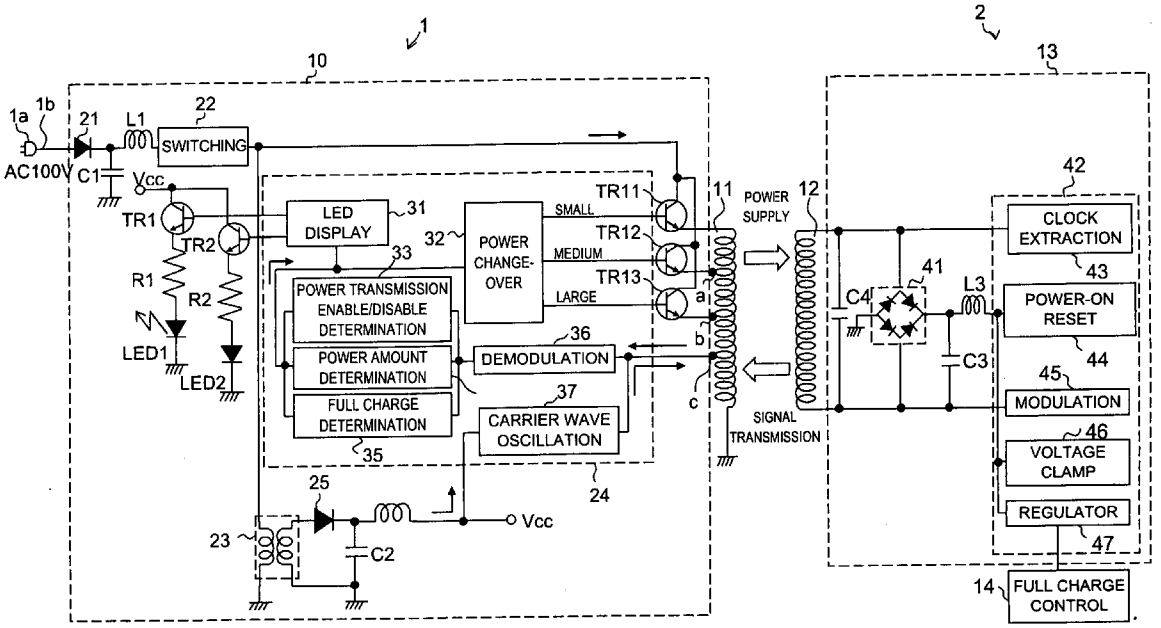

SAMSUNG EXHIBIT 1005

FIG. 1A

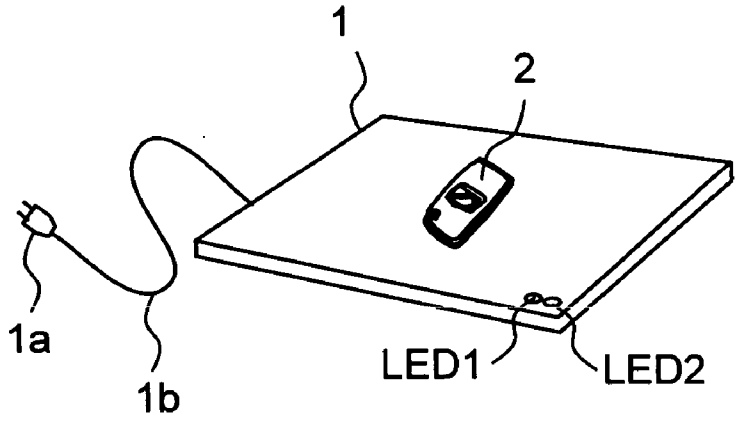

FIG. 1B

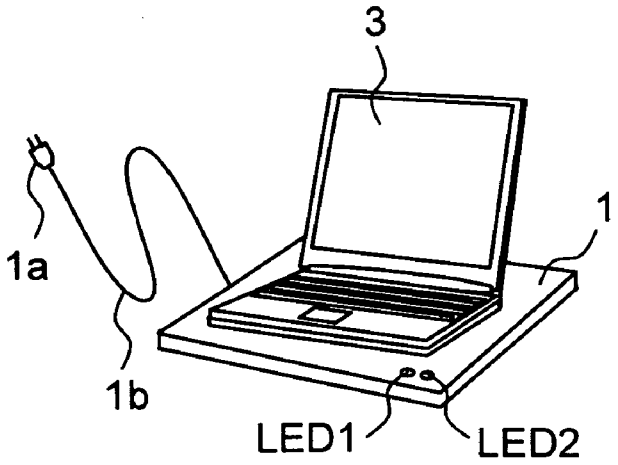

FIG. 2A

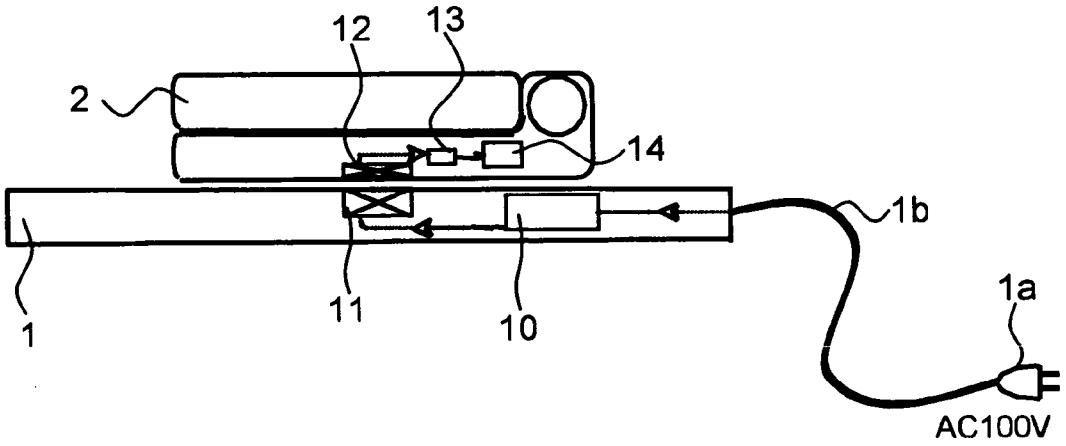

FIG. 2B

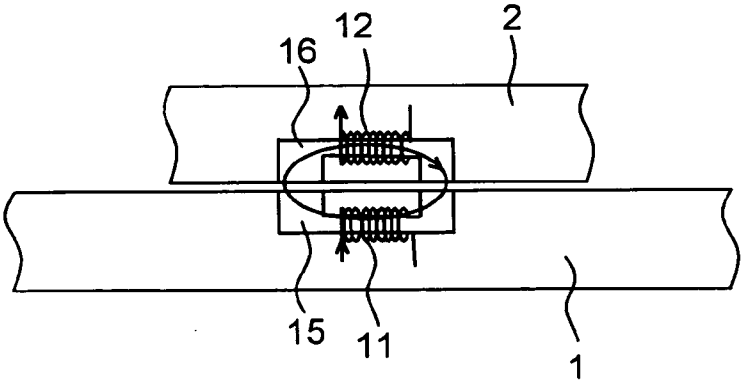

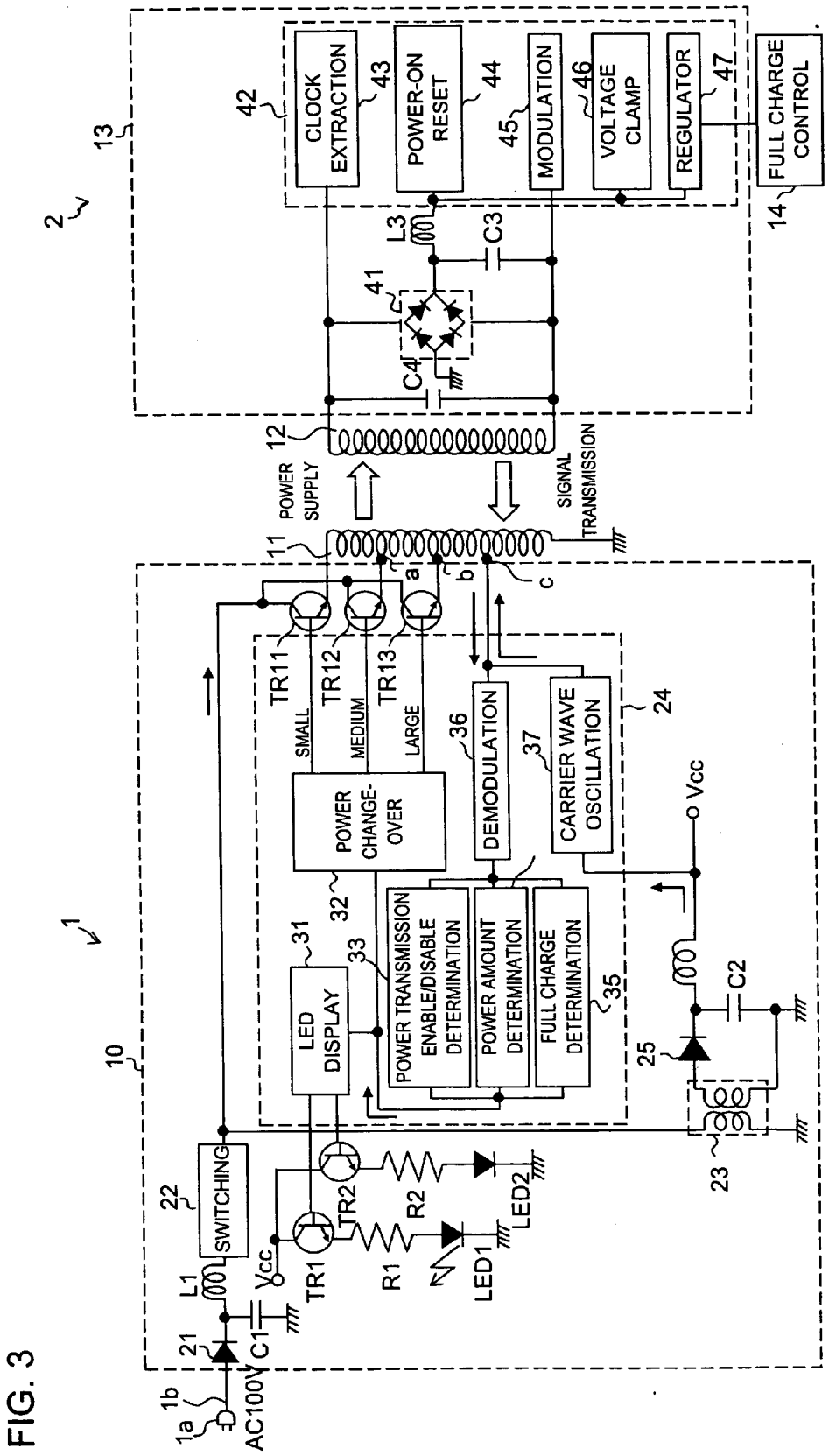
FIG. 3
1
2
10
11
12
13
14
21
22
23
24
25
31
32
33
35
36
37
41
42
43
44
45
46
47
1a
1b
AC100V
C1
L1
SWITCHING
Vcc
TR1
TR2
R1
R2
LED1
LED2
LED DISPLAY
POWER CHANGE-OVER
SMALL
MEDIUM
LARGE
TR11
TR12
TR13
a
b
c
POWER TRANSMISSION ENABLE/DISABLE DETERMINATION
POWER AMOUNT DETERMINATION
FULL CHARGE DETERMINATION
DEMODULATION
CARRIER WAVE OSCILLATION
C2
POWER SUPPLY
SIGNAL TRANSMISSION
C4
L3
C3
CLOCK EXTRACTION
POWER-ON RESET
MODULATION
VOLTAGE CLAMP
REGULATOR
FULL CHARGE CONTROL

FIG. 4

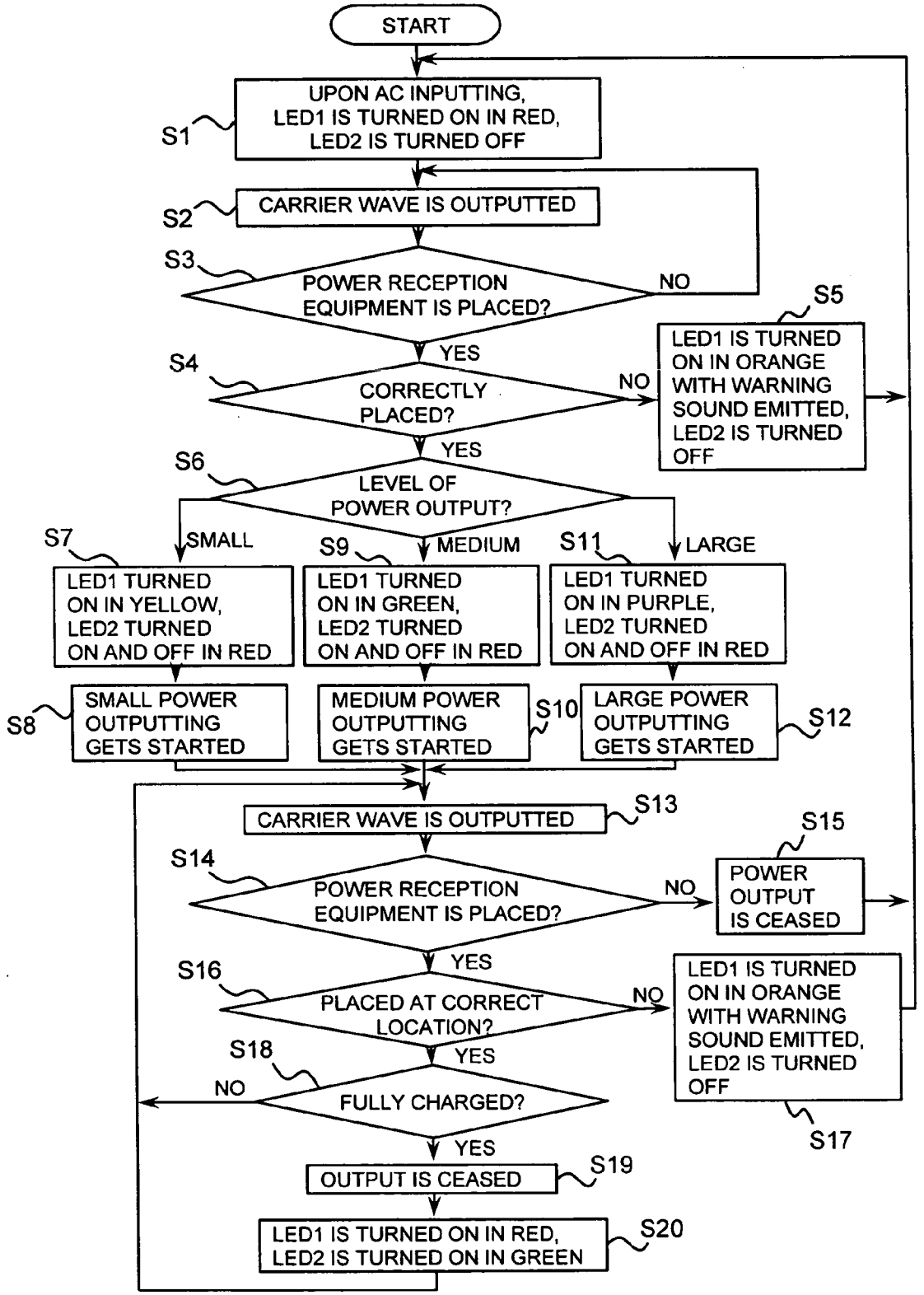
START
UPON AC INPUTTING, LED1 IS TURNED ON IN RED, LED2 IS TURNED OFF
S1
CARRIER WAVE IS OUTPUTTED
S2
S3
POWER RECEPTION EQUIPMENT IS PLACED?
NO
YES
S5
LED1 IS TURNED ON IN ORANGE WITH WARNING SOUND EMITTED, LED2 IS TURNED OFF
S4
CORRECTLY PLACED?
NO
YES
S6
LEVEL OF POWER OUTPUT?
S7
SMALL
S9
MEDIUM
S11
LARGE
LED1 TURNED ON IN YELLOW, LED2 TURNED ON AND OFF IN RED
LED1 TURNED ON IN GREEN, LED2 TURNED ON AND OFF IN RED
LED1 TURNED ON IN PURPLE, LED2 TURNED ON AND OFF IN RED
S8
SMALL POWER OUTPUTTING GETS STARTED
MEDIUM POWER OUTPUTTING GETS STARTED
S10
LARGE POWER OUTPUTTING GETS STARTED
S12
CARRIER WAVE IS OUTPUTTED
S13
S15
S14
POWER RECEPTION EQUIPMENT IS PLACED?
NO
POWER OUTPUT IS CEASED
YES
S16
PLACED AT CORRECT LOCATION?
NO
LED1 IS TURNED ON IN ORANGE WITH WARNING SOUND EMITTED, LED2 IS TURNED OFF
S17
S18
YES
NO
FULLY CHARGED?
YES
OUTPUT IS CEASED
S19
LED1 IS TURNED ON IN RED, LED2 IS TURNED ON IN GREEN
S20

FIG. 5

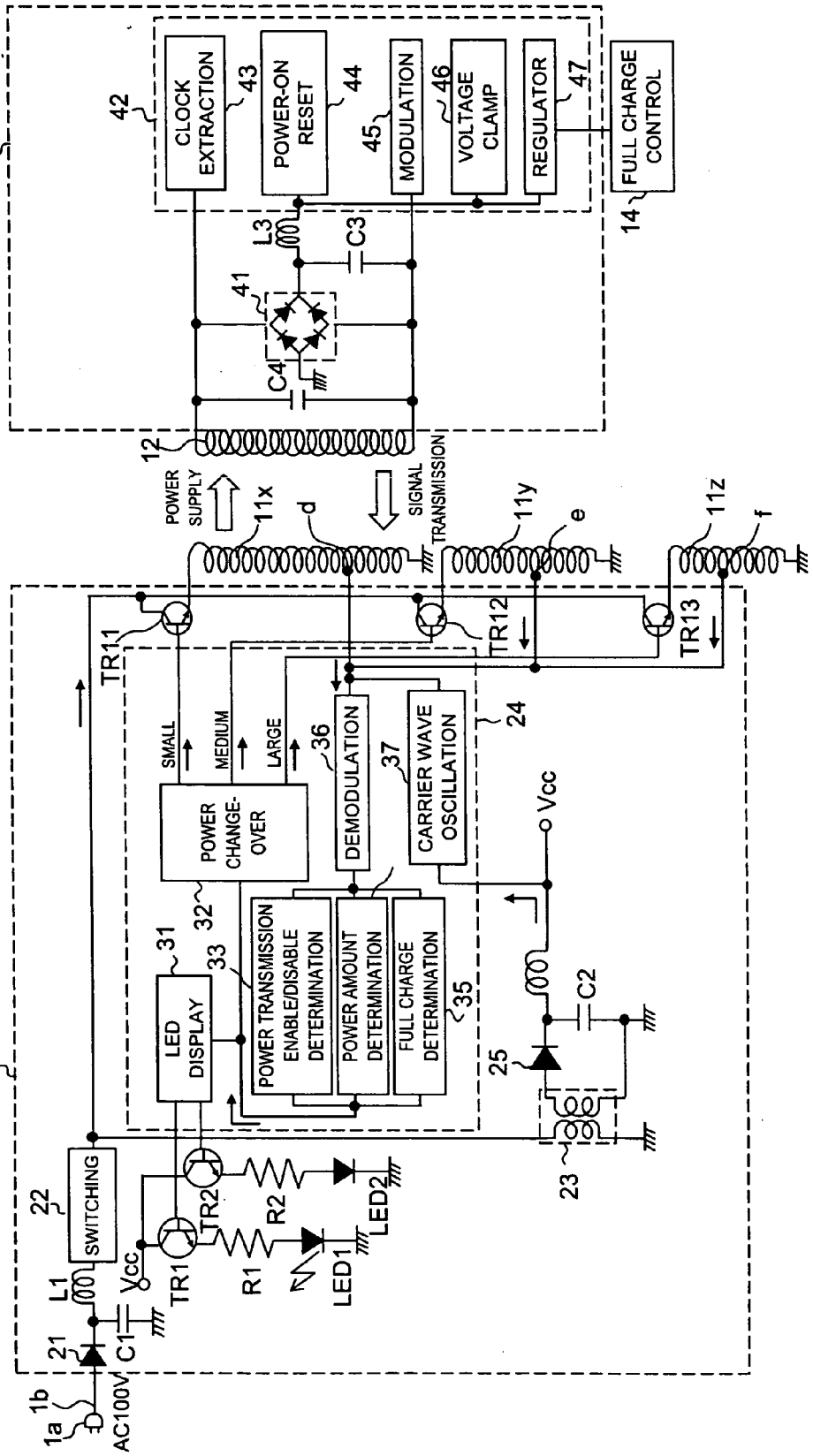
CLOCK EXTRACTION
POWER-ON RESET
MODULATION
VOLTAGE CLAMP
REGULATOR
FULL CHARGE CONTROL
POWER SUPPLY
SIGNAL TRANSMISSION
SMALL
MEDIUM
LARGE
POWER CHANGE-OVER
DEMODULATION
CARRIER WAVE OSCILLATION
LED DISPLAY
POWER TRANSMISSION ENABLE/DISABLE DETERMINATION
POWER AMOUNT DETERMINATION
FULL CHARGE DETERMINATION
SWITCHING
AC100V
Vcc
TR1
TR2
TR11
TR12
TR13
R1
R2
LED1
LED2
L1
L3
C1
C2
C3
C4
1a
1b
2
10
11x
11y
11z
12
13
14
21
22
23
24
25
31
32
33
35
36
37
41
42
43
44
45
46
47
d
e
f

FIG. 6

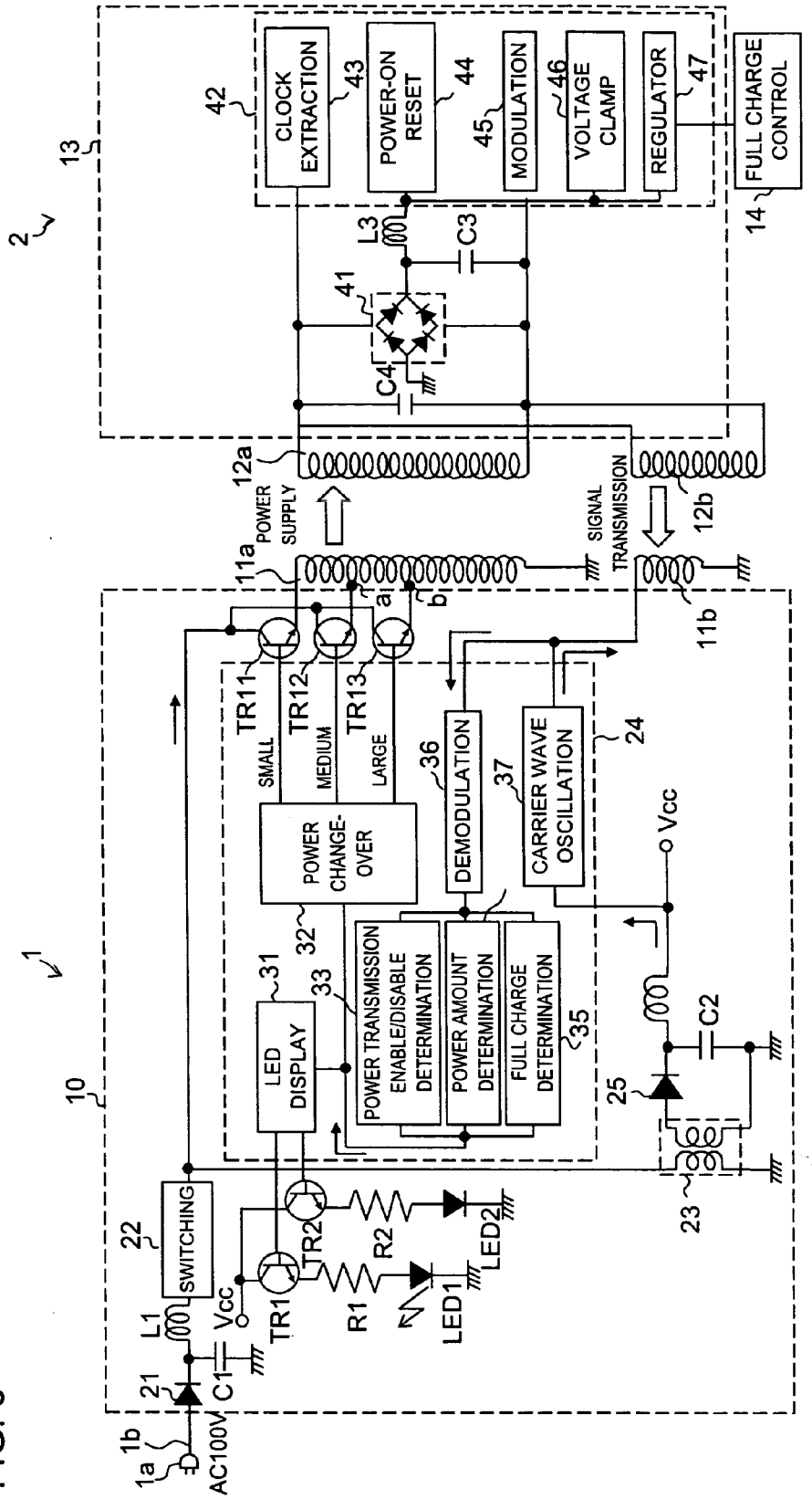
CLOCK EXTRACTION
POWER-ON RESET
MODULATION
VOLTAGE CLAMP
REGULATOR
FULL CHARGE CONTROL
POWER SUPPLY
SIGNAL TRANSMISSION
SMALL
MEDIUM
LARGE
POWER CHANGE-OVER
DEMODULATION
CARRIER WAVE OSCILLATION
LED DISPLAY
POWER TRANSMISSION ENABLE/DISABLE DETERMINATION
POWER AMOUNT DETERMINATION
FULL CHARGE DETERMINATION
SWITCHING
AC100V
Vcc
TR1
TR2
TR11
TR12
TR13
R1
R2
LED1
LED2
L1
L3
C1
C2
C3
C4
1a
1b
2
10
11a
11b
12a
12b
13
14
21
22
23
24
25
31
32
33
35
36
37
41
42
43
44
45
46
47

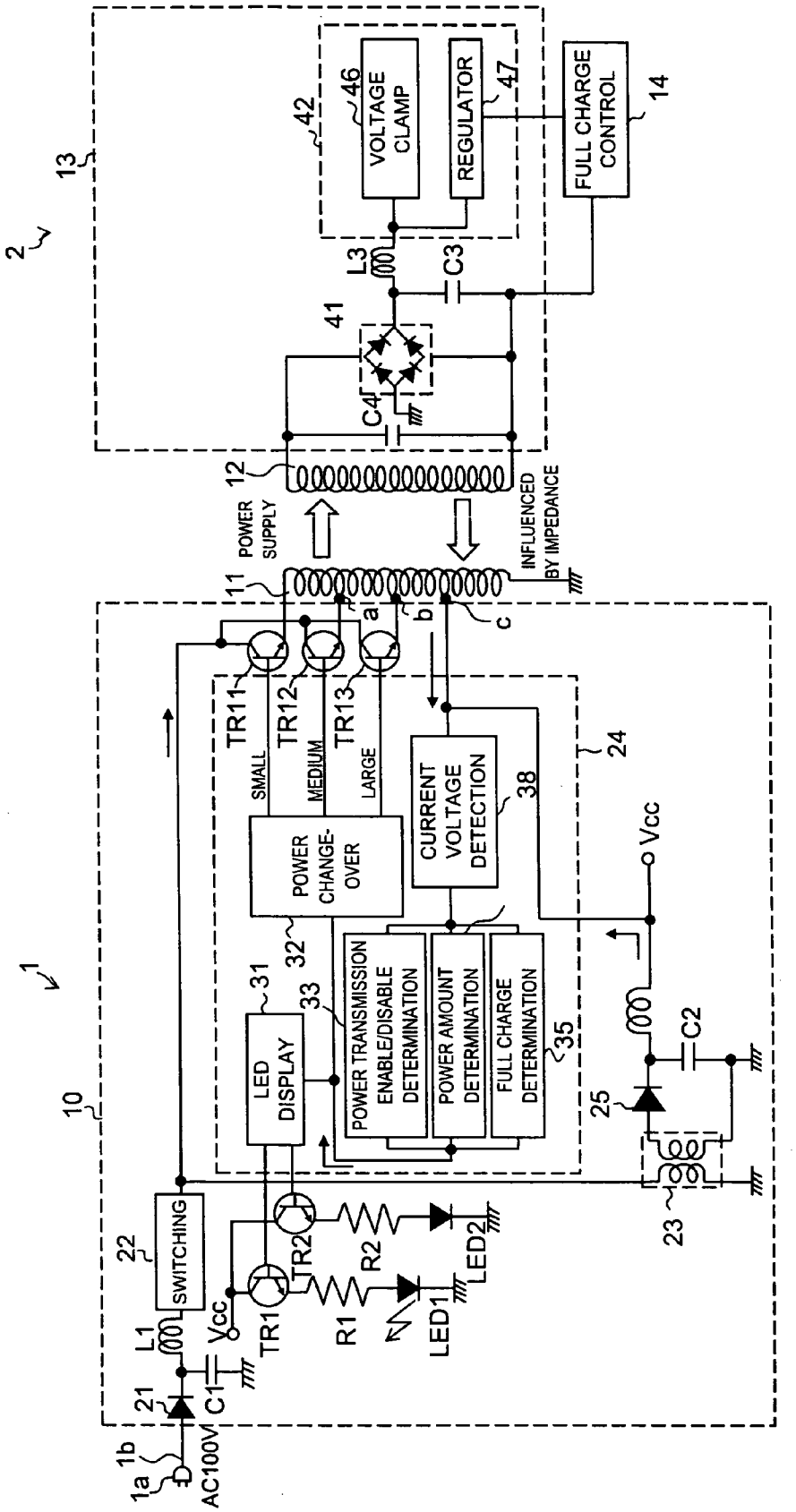
2
13
42
46
VOLTAGE CLAMP
REGULATOR
47
FULL CHARGE CONTROL
14
L3
C3
41
C4
12
POWER SUPPLY
INFLUENCED BY IMPEDANCE
11
a
b
c
TR11
TR12
TR13
SMALL
MEDIUM
LARGE
POWER CHANGE-OVER
CURRENT VOLTAGE DETECTION
38
24
Vcc
1
10
31
32
33
LED DISPLAY
POWER TRANSMISSION ENABLE/DISABLE DETERMINATION
POWER AMOUNT DETERMINATION
FULL CHARGE DETERMINATION
35
C2
25
23
22
SWITCHING
TR2
R2
LED2
TR1
R1
LED1
L1
Vcc
21
C1
1b
1a
AC100V

FIG. 7

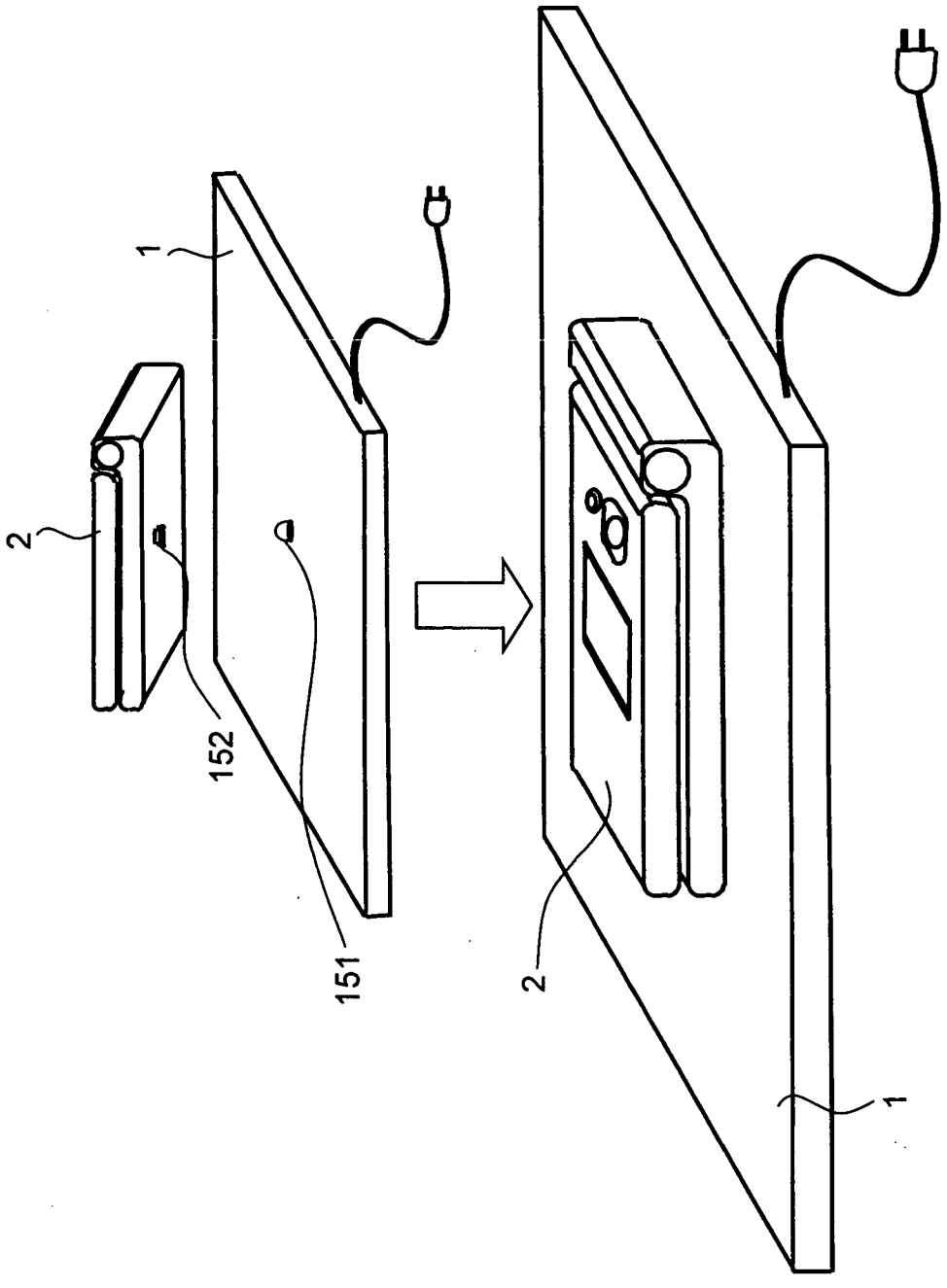

FIG. 8

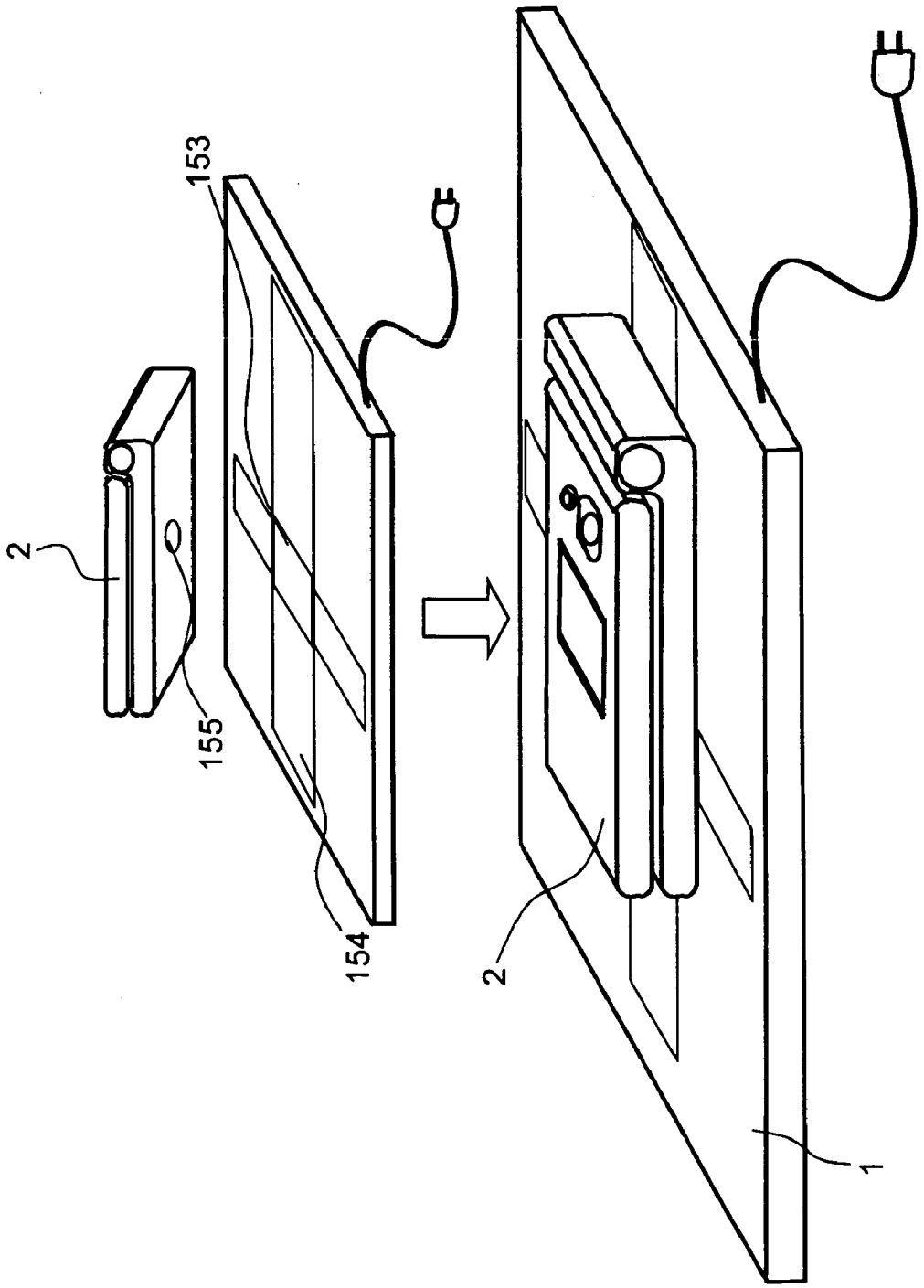

FIG. 9

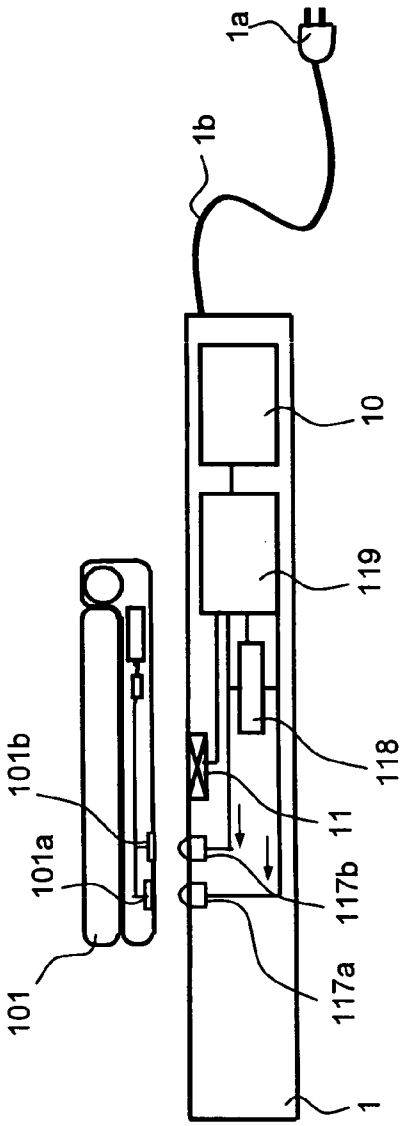

FIG. 10A

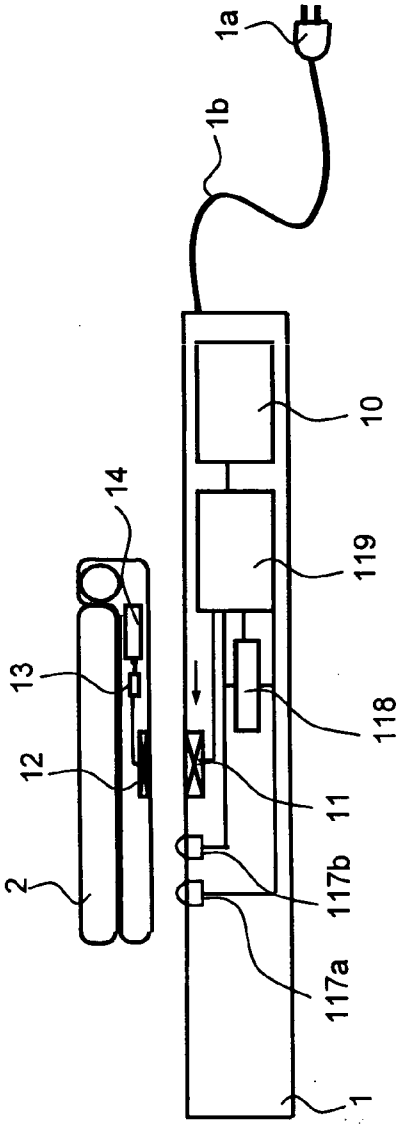

FIG. 10B

FIG. 11A

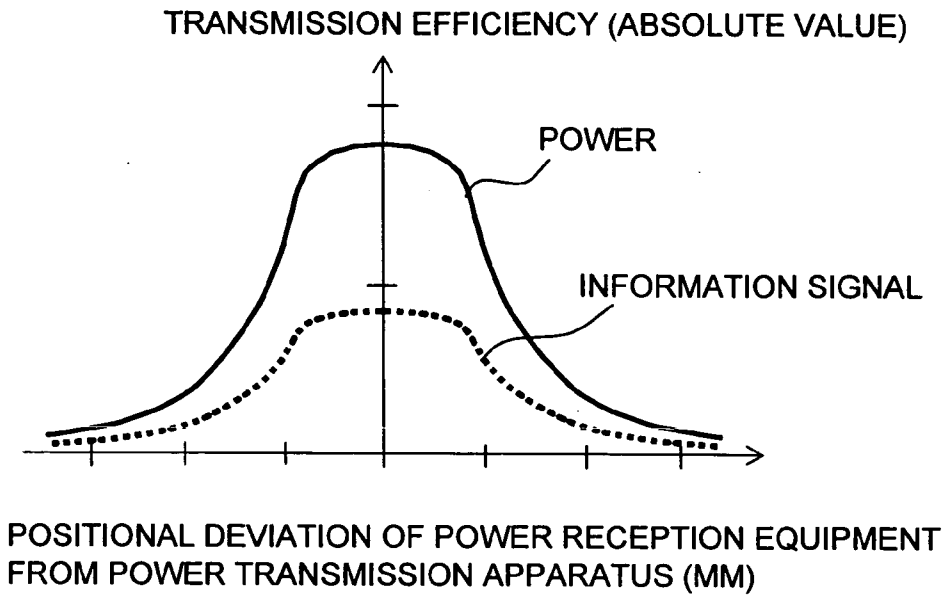

FIG. 11B

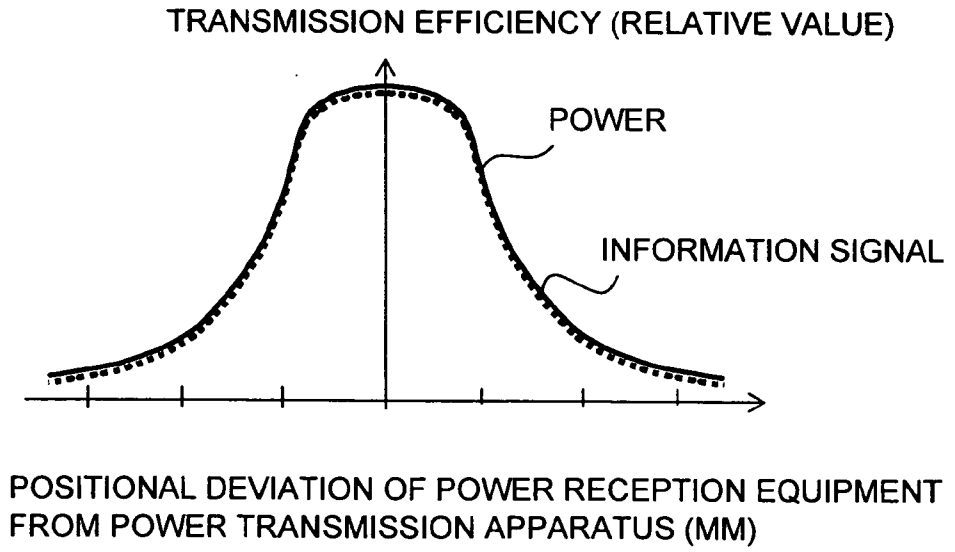

FIG. 12

AC CONNECTION AND OPERATION CONDITIONS	LED1 DISPLAY	LED2 DISPLAY
WHEN AC PLUG IS NOT CONNECTED	OFF	OFF
WHEN AC PLUG IS CONNECTED	ON IN RED	OFF
WHEN AC PLUG IS CONNECTED WITH NO POWER TRANSMISSION	ON IN RED	OFF
WHEN AC PLUG IS CONNECTED WITH SMALL POWER TRANSMISSION (DURING CHARGING)	ON IN YELLOW	ON AND OFF IN RED
WHEN AC PLUG IS CONNECTED WITH MEDIUM POWER TRANSMISSION (DURING CHARGING)	ON IN GREEN	ON AND OFF IN RED
WHEN AC PLUG IS CONNECTED WITH LARGE POWER TRANSMISSION (DURING CHARGING)	ON IN PURPLE	ON AND OFF IN RED
WHEN AC PLUG IS CONNECTED WITH NO POWER TRANSMISSION IN FULL CHARGE	ON IN RED	ON IN GREEN
WHEN AC PLUG IS CONNECTED WITH POSITIONAL DEVIATION OF A PREDETERMINED VALUE OR MORE	ON IN ORANGE	OFF

FIG. 13A

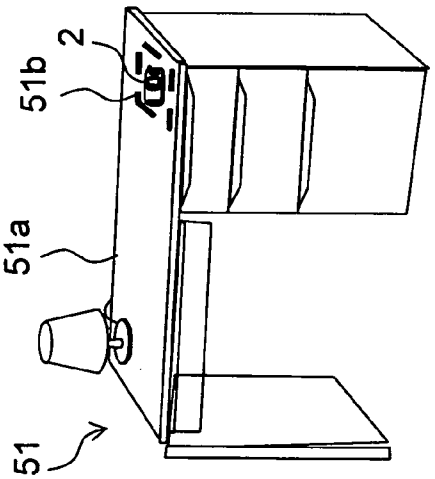

FIG. 13B

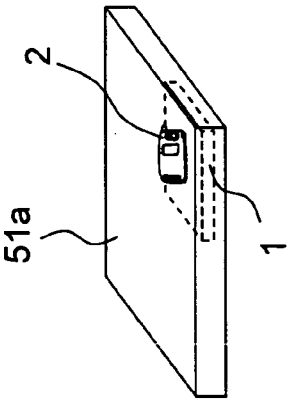

FIG. 13C

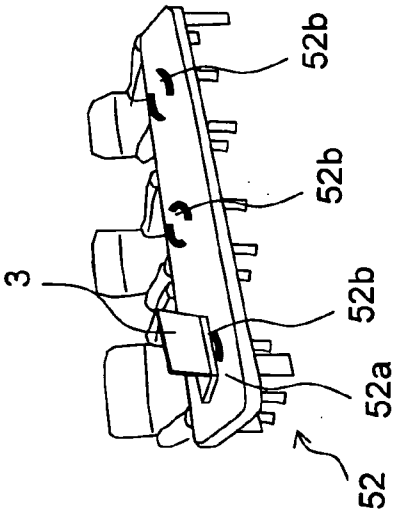

FIG. 13D

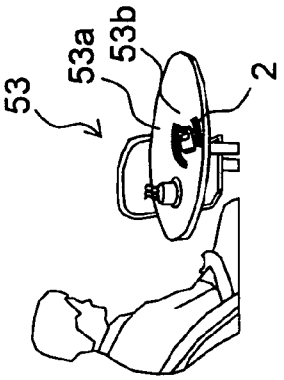

FIG. 13E

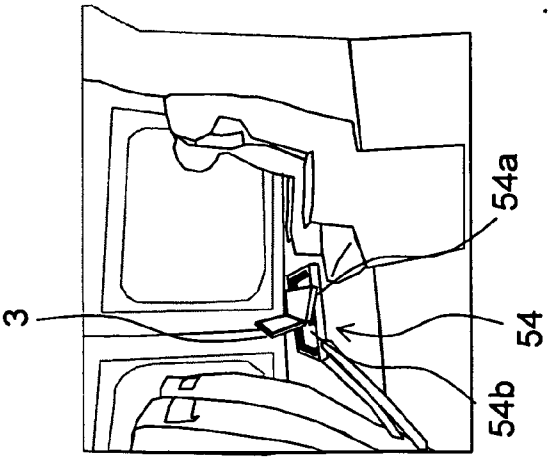

FIG. 14

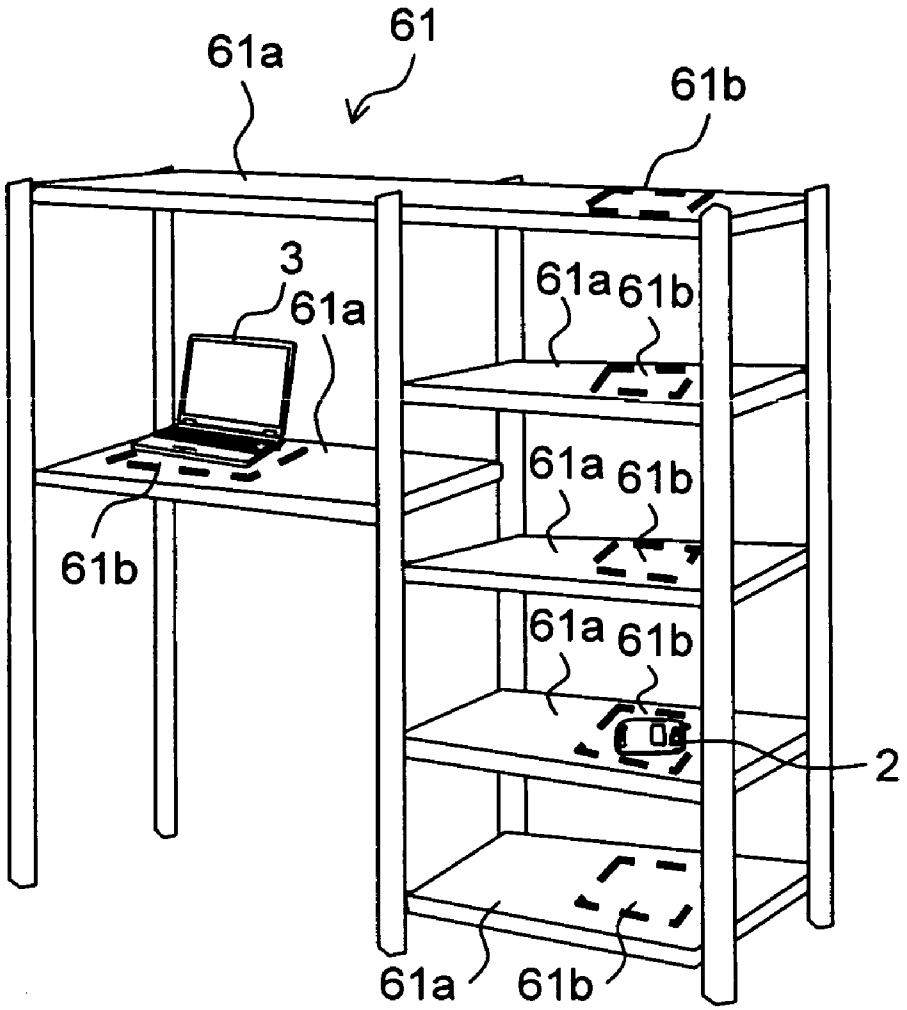

FIG. 15B

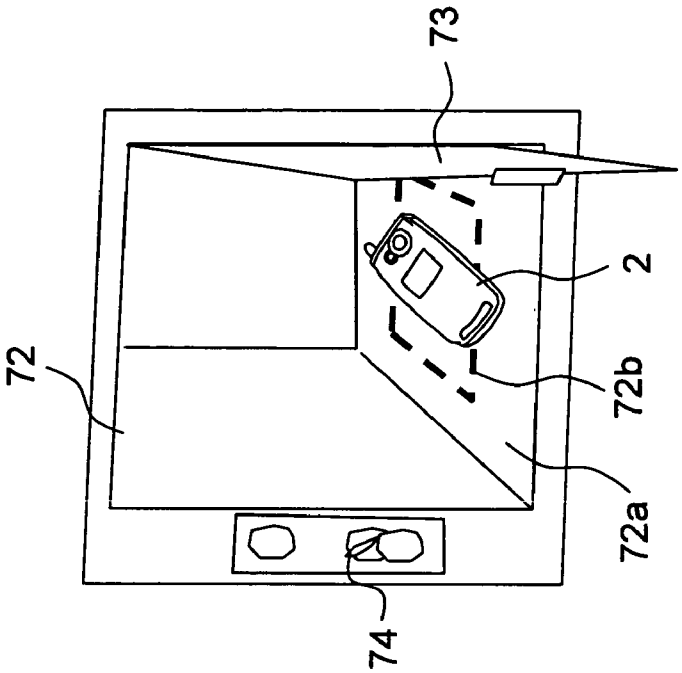

FIG. 15A

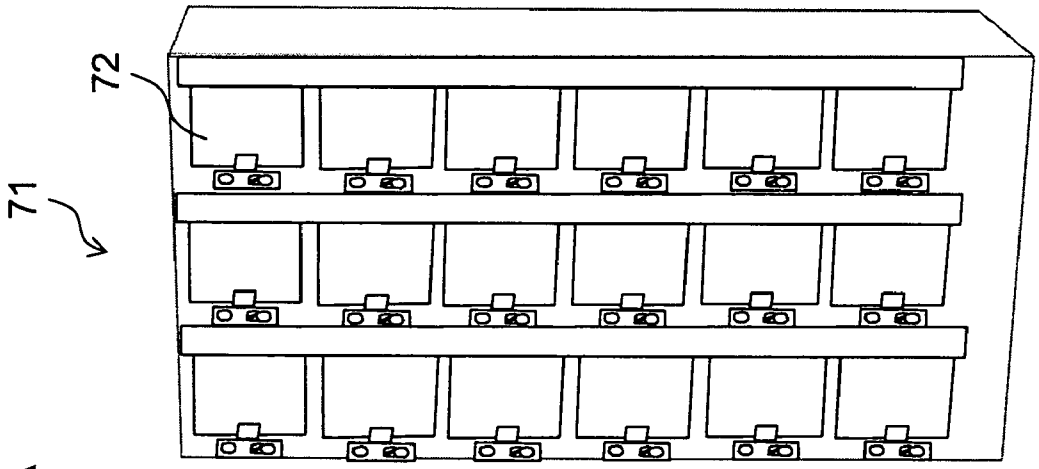

FIG. 16

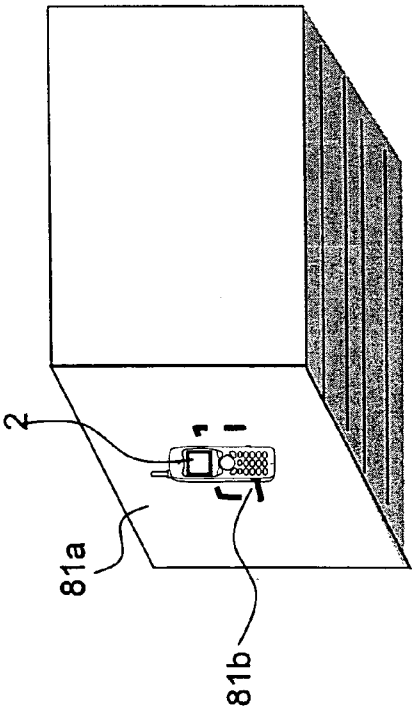

FIG. 17

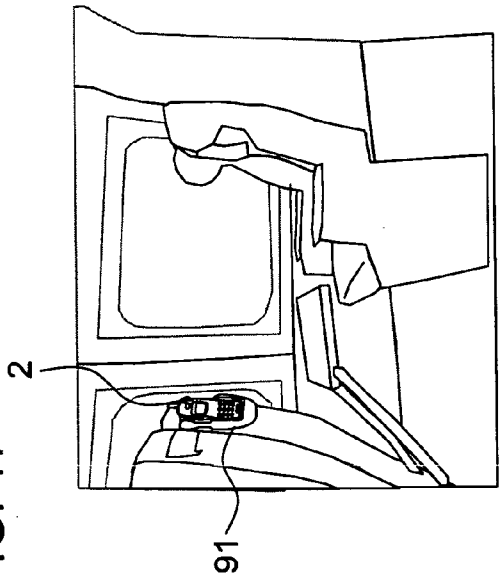

FIG. 18

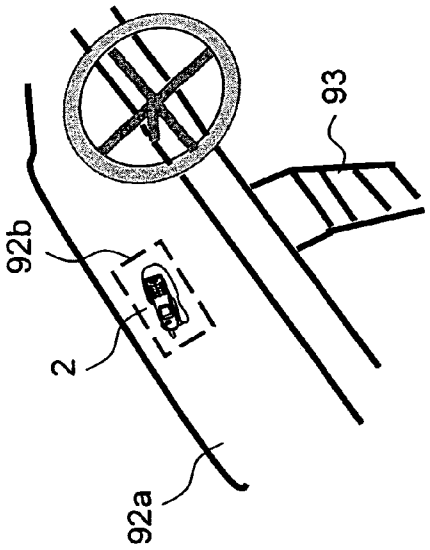

FIG. 19

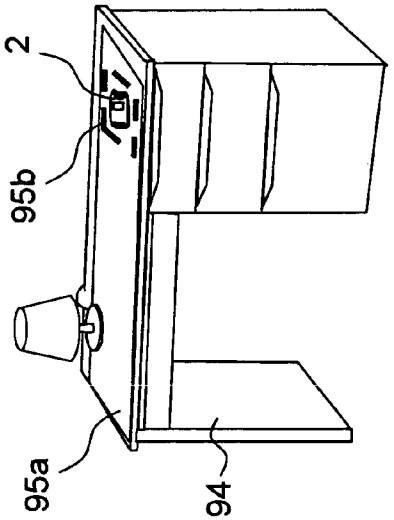

FIG. 20

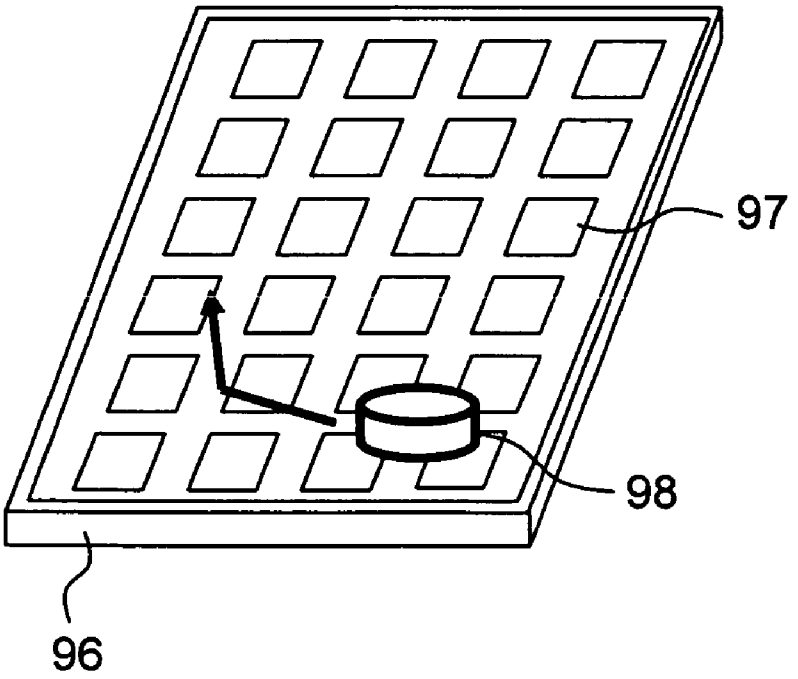

FIG. 21

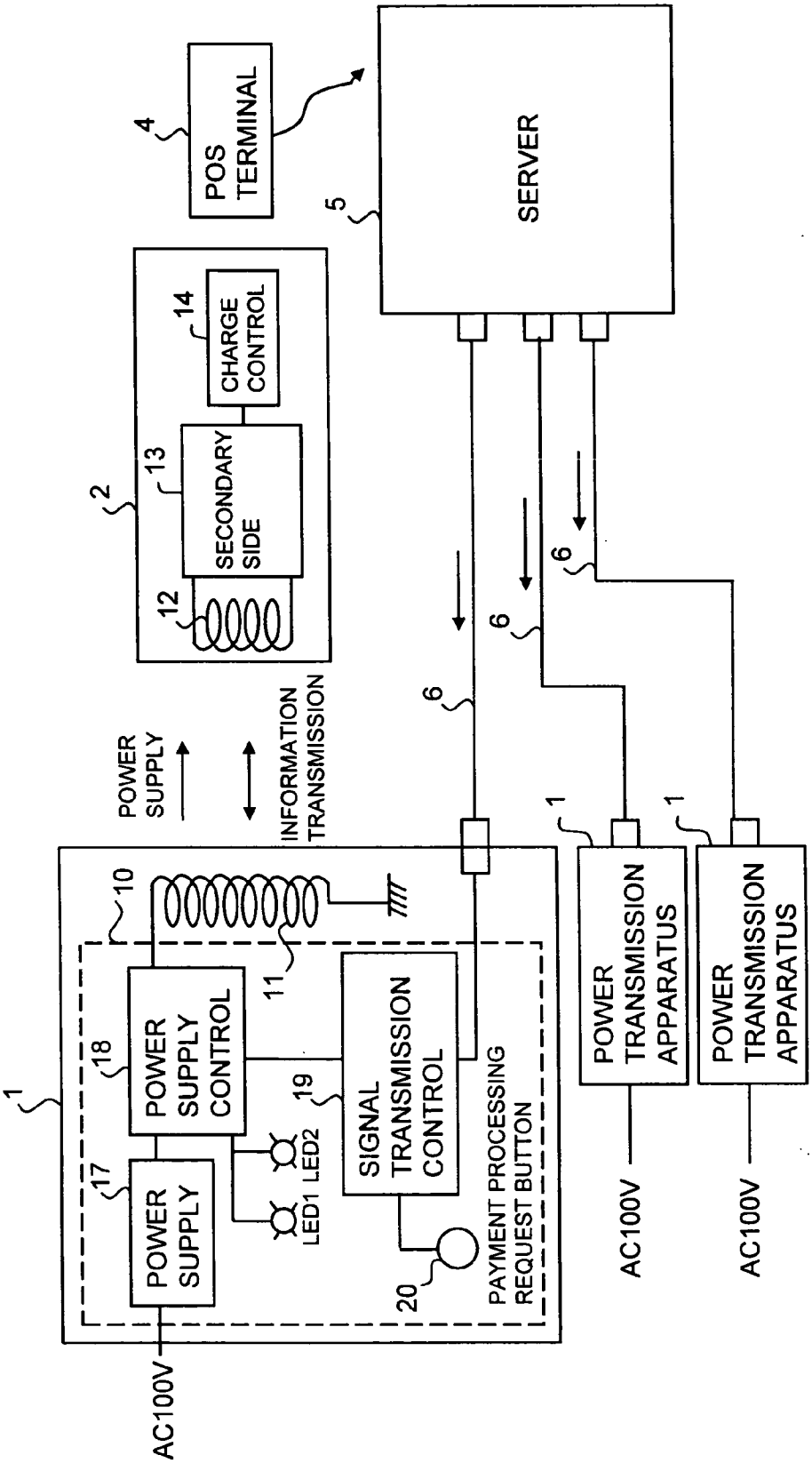
POS TERMINAL
4
SERVER
5
CHARGE CONTROL
14
SECONDARY SIDE
13
2
12
6
6
6
POWER SUPPLY
INFORMATION TRANSMISSION
1
1
1
10
11
POWER SUPPLY CONTROL
18
SIGNAL TRANSMISSION CONTROL
19
POWER SUPPLY
17
LED1 LED2
20
PAYMENT PROCESSING REQUEST BUTTON
POWER TRANSMISSION APPARATUS
POWER TRANSMISSION APPARATUS
AC100V
AC100V
AC100V

FIG. 22

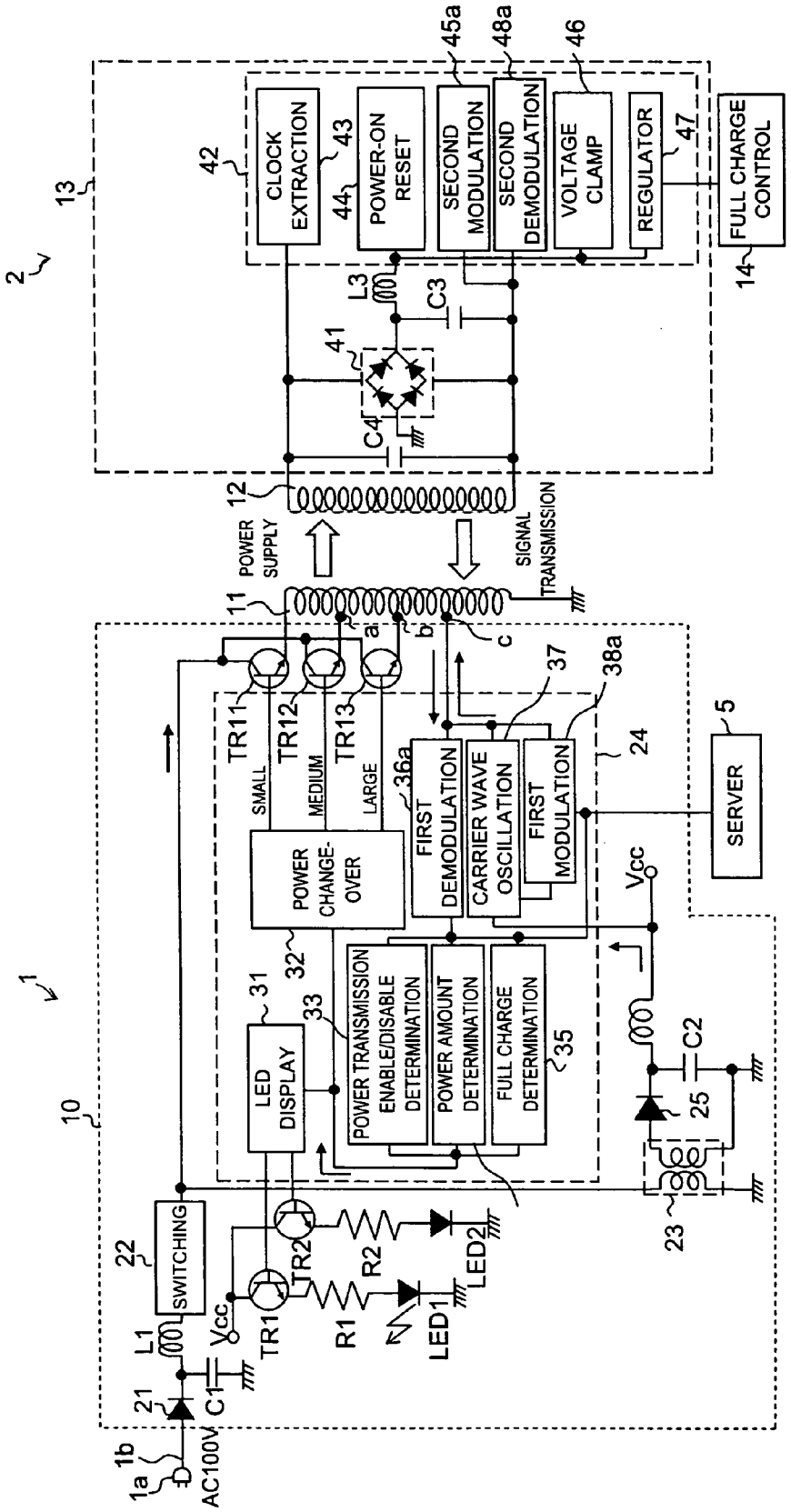
CLOCK EXTRACTION
POWER-ON RESET
SECOND MODULATION
SECOND DEMODULATION
VOLTAGE CLAMP
REGULATOR
FULL CHARGE CONTROL
POWER SUPPLY
SIGNAL TRANSMISSION
SMALL
MEDIUM
LARGE
POWER CHANGE-OVER
FIRST DEMODULATION
CARRIER WAVE OSCILLATION
FIRST MODULATION
SERVER
LED DISPLAY
POWER TRANSMISSION ENABLE/DISABLE DETERMINATION
POWER AMOUNT DETERMINATION
FULL CHARGE DETERMINATION
SWITCHING
AC100V
Vcc

FIG. 23

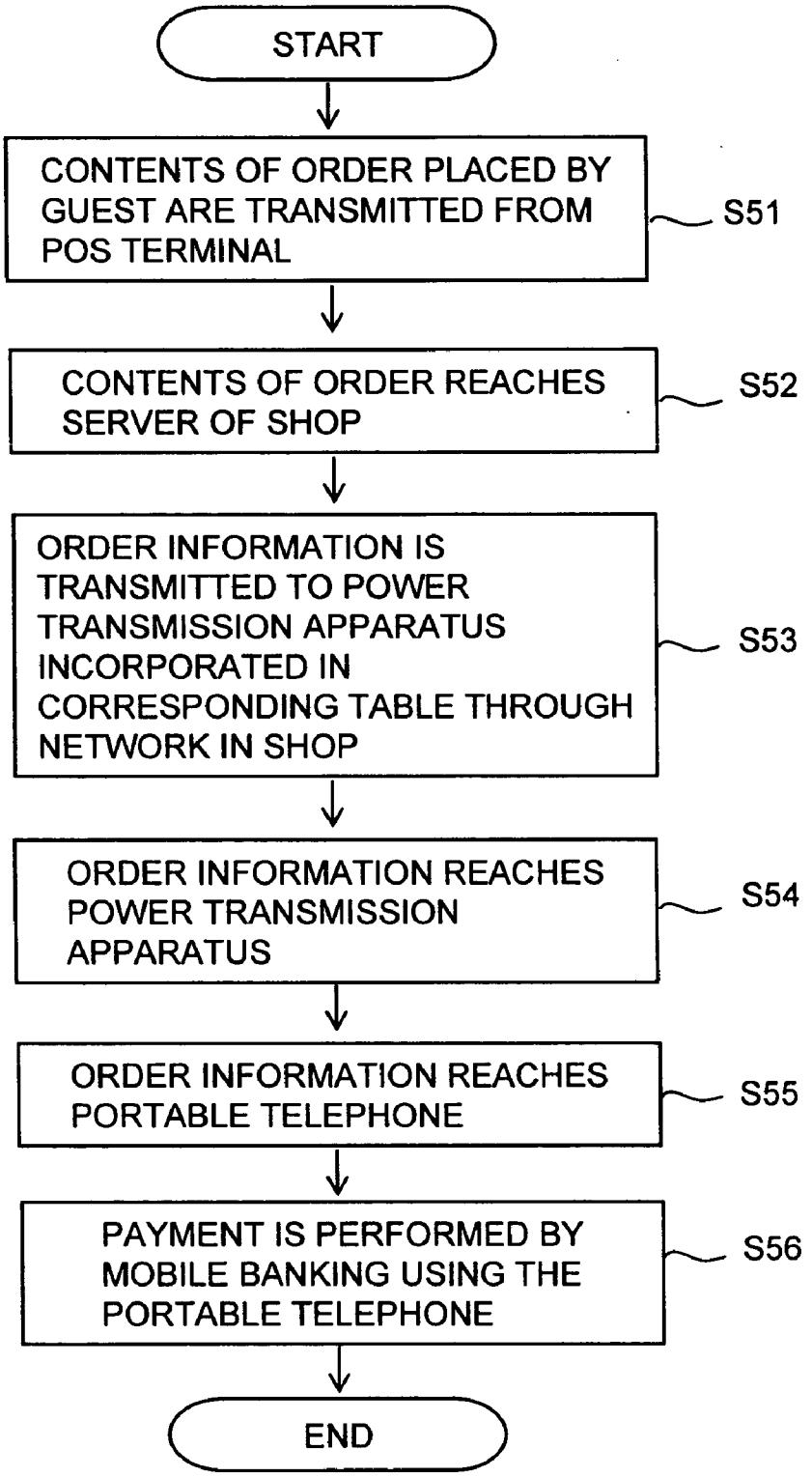
START
CONTENTS OF ORDER PLACED BY GUEST ARE TRANSMITTED FROM POS TERMINAL
S51
CONTENTS OF ORDER REACHES SERVER OF SHOP
S52
ORDER INFORMATION IS TRANSMITTED TO POWER TRANSMISSION APPARATUS INCORPORATED IN CORRESPONDING TABLE THROUGH NETWORK IN SHOP
S53
ORDER INFORMATION REACHES POWER TRANSMISSION APPARATUS
S54
ORDER INFORMATION REACHES PORTABLE TELEPHONE
S55
PAYMENT IS PERFORMED BY MOBILE BANKING USING THE PORTABLE TELEPHONE
S56
END

FIG. 24

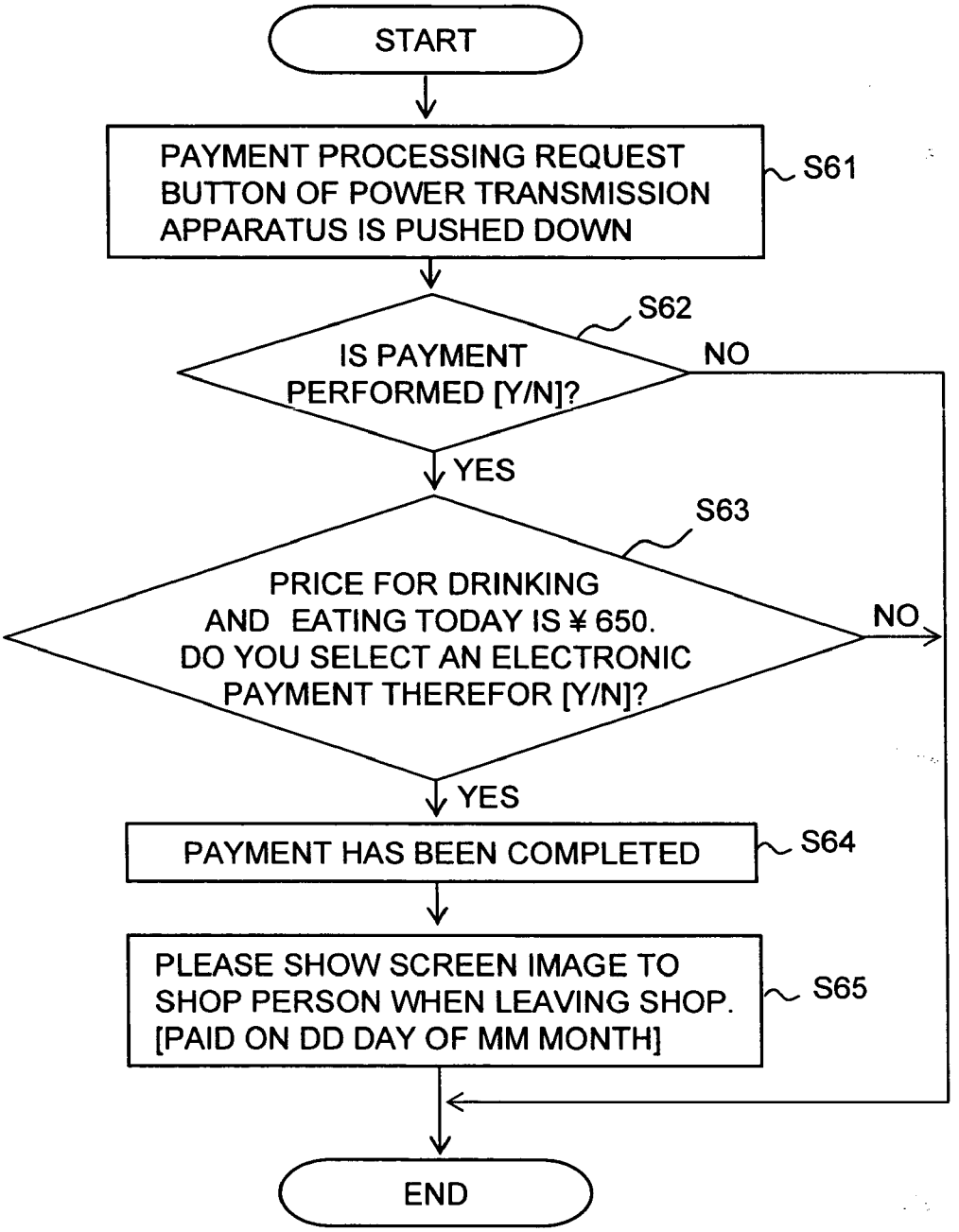
START
PAYMENT PROCESSING REQUEST BUTTON OF POWER TRANSMISSION APPARATUS IS PUSHED DOWN
S61
S62
IS PAYMENT PERFORMED [Y/N]?
NO
YES
S63
PRICE FOR DRINKING AND EATING TODAY IS ¥ 650. DO YOU SELECT AN ELECTRONIC PAYMENT THEREFOR [Y/N]?
NO
YES
PAYMENT HAS BEEN COMPLETED
S64
PLEASE SHOW SCREEN IMAGE TO SHOP PERSON WHEN LEAVING SHOP. [PAID ON DD DAY OF MM MONTH]
S65
END

FIG. 25

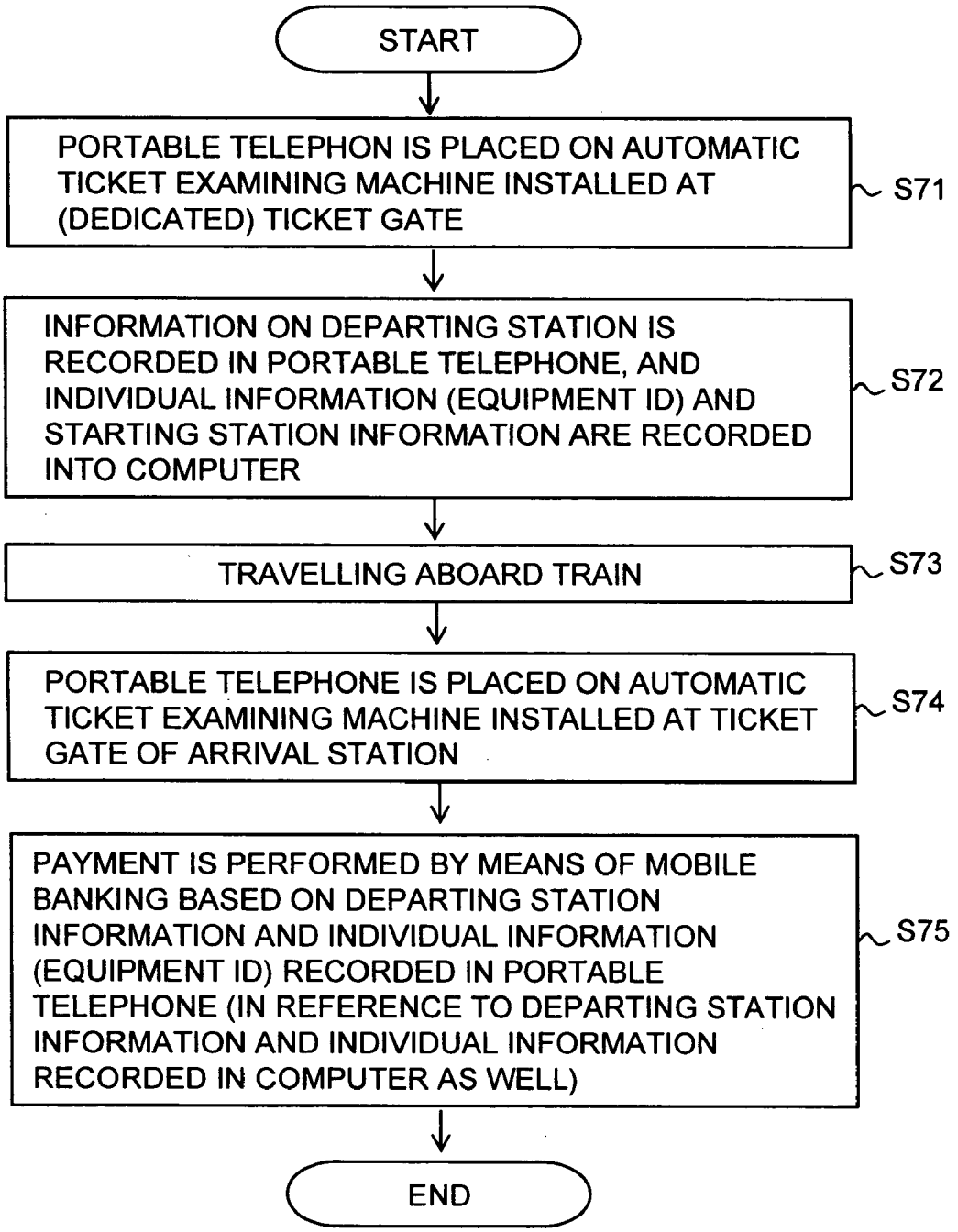
START
PORTABLE TELEPHON IS PLACED ON AUTOMATIC TICKET EXAMINING MACHINE INSTALLED AT (DEDICATED) TICKET GATE
S71
INFORMATION ON DEPARTING STATION IS RECORDED IN PORTABLE TELEPHONE, AND INDIVIDUAL INFORMATION (EQUIPMENT ID) AND STARTING STATION INFORMATION ARE RECORDED INTO COMPUTER
S72
TRAVELLING ABOARD TRAIN
S73
PORTABLE TELEPHONE IS PLACED ON AUTOMATIC TICKET EXAMINING MACHINE INSTALLED AT TICKET GATE OF ARRIVAL STATION
S74
PAYMENT IS PERFORMED BY MEANS OF MOBILE BANKING BASED ON DEPARTING STATION INFORMATION AND INDIVIDUAL INFORMATION (EQUIPMENT ID) RECORDED IN PORTABLE TELEPHONE (IN REFERENCE TO DEPARTING STATION INFORMATION AND INDIVIDUAL INFORMATION RECORDED IN COMPUTER AS WELL)
S75
END

FIG. 26

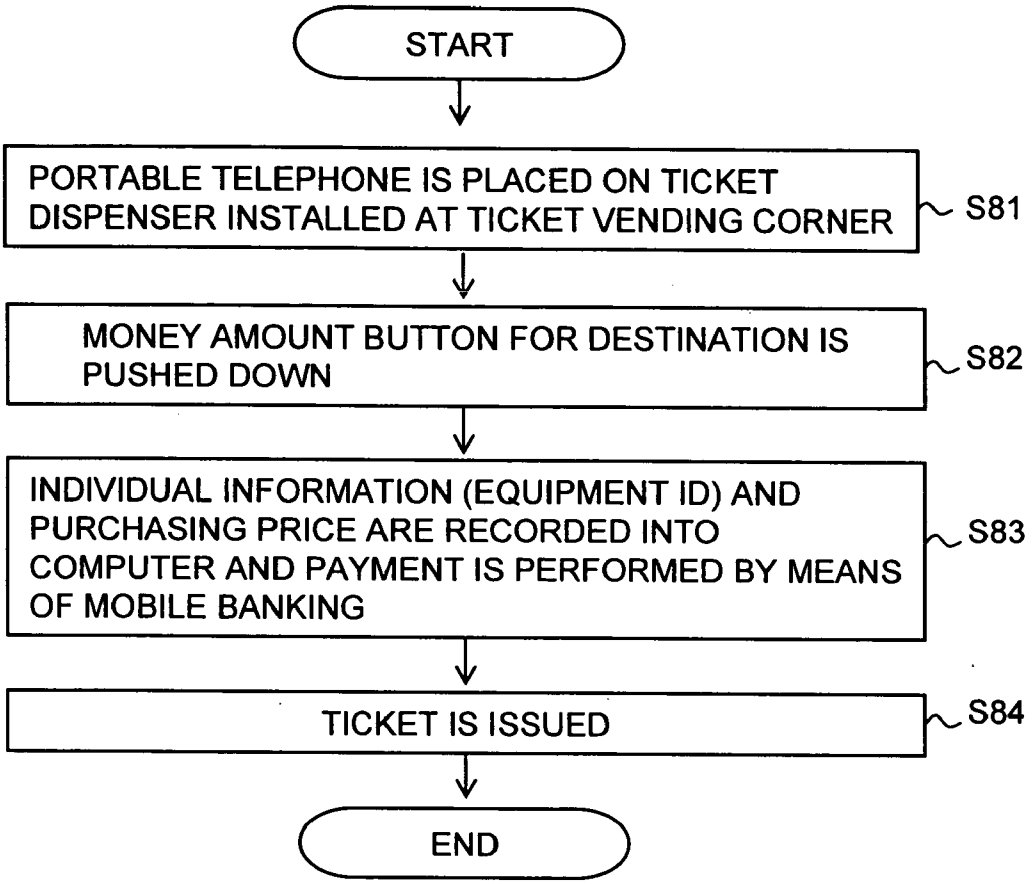
START
PORTABLE TELEPHONE IS PLACED ON TICKET DISPENSER INSTALLED AT TICKET VENDING CORNER
S81
MONEY AMOUNT BUTTON FOR DESTINATION IS PUSHED DOWN
S82
INDIVIDUAL INFORMATION (EQUIPMENT ID) AND PURCHASING PRICE ARE RECORDED INTO COMPUTER AND PAYMENT IS PERFORMED BY MEANS OF MOBILE BANKING
S83
TICKET IS ISSUED
S84
END

FIG. 27 PRIOR ART

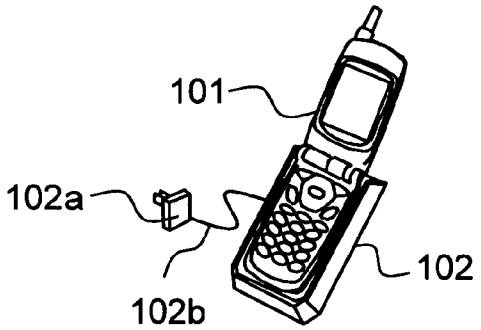

FIG. 28 PRIOR ART

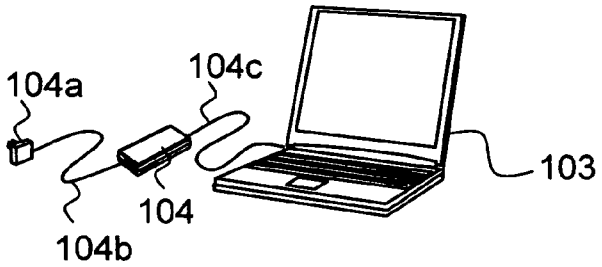

FIG. 29 PRIOR ART

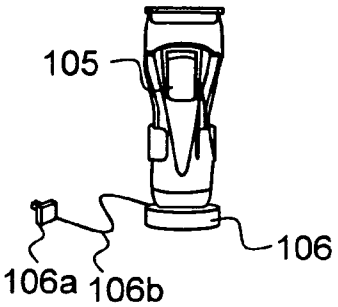

POWER SUPPLY SYSTEM

[0001] This non-provisional application claims priorities under 35 U.S.C. §119(a) on Patent Application No. 2003-340631 filed in Japan on Sep. 30, 2003, Patent Application No. 2003-340772 filed in Japan on Sep. 30, 2003, and Patent Application No. 2003-341350 filed in Japan on Sep. 30, 2003, the entire contents of which are hereby incorporated by reference.

BACKGROUND OF THE INVENTION

[0002] 1. Field of the Invention

[0003] The present invention relates to a power supply system that supplies power to electronic equipment and, more particularly, to a power supply system that supplies power to mobile electronic equipment such as portable telephones, notebook personal computers, a digital cameras, and an electronic toys.

[0004] 2. Description of the Prior Art

[0005] In FIGS. **27** to **29**, there are shown examples of a conventional power supply system that supplies power to mobile electronic equipment. **FIG. 27** is a view showing an outer appearance of a conventional power supply system performing power supply to a portable telephone. In **FIG. 27**, a numerical symbol **101** indicates a portable telephone and a numerical symbol **102** indicates a holder of a terminal contact type charger (AC adapter) dedicated for charging a battery built in the portable telephone **101**. Attached to the holder **102** of the AC adapter are an AC adapter **102***a* (integral with an AC plug) and a cord **102***b*. The AC plug is inserted into a socket provided on a wall surface or the like and thereby a commercial power supply (AC 100 V) is supplied to the AC adapter **102***a*. The AC adapter **102***a* converts the supplied AC 100 V to a DC voltage used in charging the battery of the portable telephone **101** and charges the battery of the portable telephone **101** with the DC voltage through the cord **102***b*, the AC adapter holder **102**, and power transmission electrodes that are made contact with power receiving electrodes of the portable telephone **101**. The DC voltage can also works directly as a power supply for driving the portable telephone **101**.

[0006] **FIG. 28** is a view showing an outer appearance of another conventional power supply system performing power supply to a notebook personal computer (hereinafter referred to a notebook PC). In **FIG. 28**, a numerical symbol **103** indicates a notebook PC and a numerical symbol **104** indicates a dedicated charger (AC adapter) for charging a battery built in the notebook PC **103**. Attached to the AC adapter **104** are an AC plug **104***a*, and cords **104***b* and **104***c*. The AC plug **104***a* is inserted into a socket provided on a wall surface or the like, and thereby the commercial power supply (AC 100 V) is supplied to the AC adapter **104** through the cord **104***b*. The AC adapter **104** converts the supplied AC 100 V to a DC voltage used in charging the battery of the notebook PC **103** and supplies the DC voltage to the notebook PC **103** through the cord **104***c* to thereby charge the built-in battery. The DC voltage can also works as a power supply for directly driving the notebook PC **103**.

[0007] **FIG. 29** is a view showing an outer appearance of still another conventional power supply system performing power supply to a shaver. In **FIG. 29**, a numerical symbol **105** indicates a shaver, and a numerical symbol **106** indicates a non-contact dedicated charger (AC adapter) for charging a battery built in the shaver **105**. Attached to the AC adapter **106** are an AC plug **106***a* and a cord **106***b*. The AC plug **106***a* is inserted into a socket provided on a wall surface or the like, and thereby the commercial power supply (AC 100 V) is supplied to the AC adapter **106** through the cord **106***b*. The AC adapter **106** converts the supplied AC 100 V once to a DC voltage, and, thereafter, the DC voltage is subjected to switching and supplied to the battery of the shaver **105** by means of the non-contact power supply using magnetic coupling so as to charge the battery. The DC voltage can also works as a power supply for directly driving the shaver **103**.

[0008] A non-contact charger is disclosed in Japanese Patent Application Laid-Open No. 2001-16789, in which not only is a secondary side coil installed at the bottom of the body thereof, but a primary side coil is also installed below a body placement section of the charger. When the body is placed on the body placement section of the charger, the primary side coil installed below the body placement section is coupled magnetically to the second side coil installed at the bottom of the body so that a battery located in the body is charged. A housing of the body is constituted of an assembly of plural housing parts obtained by dividing the housing in parallel to a plane to cut the secondary side coil longitudinally, wherein a bottom wall is formed in continuity with the outer peripheral wall of one of the housing parts, and the secondary side coil is provided on the inner surface of the bottom wall, while the outer surface of the bottom wall serves as a contact surface with the body placement section of the charger when charging is performed.

[0009] As shown in FIGS. **27** to **29**, the dedicated AC adapters, however, are required for charging the electronic equipment such as the portable telephone **101**, the notebook PC **103**, and the shaver **105**, and other AC adapters cannot be used instead. This means that there is no compatibility among AC adapters. Especially, in the case of the portable telephone, dedicated AC adapters are used for respective portable telephones which are different in model or make, thereby providing no compatibility among these AC adapters, only being resulted in inconvenience.

[0010] Since there is no compatibility among AC adapters, a problem has arisen that a house is flooded with many AC adapters. In a case where many adapters are present in a house, another problem has arisen that the AC adapters and cords used for connecting the AC adapters to the commercial power supply become impediments to movement of family members.

[0011] In a case where equipment is installed on a shelve, such as a personal computer rack, relocating the equipment involves both the equipment and an AC adapter thereof as a set, only resulting in cumbersomeness. A cleaning robot, a toy robot, and the like have to be charged by respective dedicated charging adapters, which requires an operation that each robot is connected to the AC adapter for charging every time.

[0012] An AC adapter specially designed for corresponding electronic equipment is necessary to be carried by a person who carries the electronic equipment in a public facility at a destination of travel or in transit, which has greatly devalued portability of the mobile electronic equipment. When an automobile is used for traveling, a charging adapter is attached to a dashboard, a console box, or the like

to thereby charge a portable telephone, whereas in such a case, the adapter and a cord thereof become obstacles during driving, and a case arose where a view field of a driver is partly blocked.

[0013] In a conventional technology described in Japanese Patent Application Laid-Open No. 2001-16789, since there is no worrisome possibility of level differences occurring among parts bonded at the bottom of the housing, and a spacing between the primary side and secondary side coils can be kept constant, stable charge current can be supplied to the main body of electronic equipment. However, only one designated type of electronic equipment can be charged by the non-contact charger with a problem that the non-contact charger cannot charge plural types of electronic equipment.

[0014] In a case where a price for drinking and eating is paid at a cashier after the drinking and eating in eating houses such as a coffee shop, a restaurant, or the like, or in a case where a hotel charge or the like is paid at a front desk when guests check out accommodations such as hotels and inns, in some cases, the cashier or the front desk is inundated with many guests who come there at a time in order to pay for their bills. In such situations, the cashier or the front desk is crowded, causing a problem of disabling a smooth payment. Moreover, the problem causes a necessity for employees in the eating house or the hotel accommodation to standby at the cashier or the front desk in order to facilitate a smooth payment.

[0015] In a case where a train ticket is purchased from an automatic ticket dispenser, it is necessary to find out a fare to a destination in a fare schedule or the like and then purchase the ticket, which has been problematically cumbersome. In addition, another annoyance accompanies when the ticket is actually purchased, small change has to be carried. On the other hand, there is a payment method already available in which a prepaid card is purchased in advance, and the prepaid card is put through an automatic ticket dispenser installed at a ticket gate in a station, and thereby a charge required for a boarding distance is subtracted from a recorded balance on the prepaid card, whereas a problem has remained unsolved that such a prepaid card is not standardized among railway companies. If passengers change trains and take routes operated by a plurality of companies, many kinds of prepaid cards are required to be at hand for selective use.

SUMMARY OF THE INVENTION

[0016] In light of the above problems, it is an object of the present invention to provide a power supply system capable of not only supplying power to different types of electronic equipment by using a single power transmission apparatus, but also saving space and performing payment for public service and charges.

[0017] The present invention is, in order to achieve the object, directed to a power supply system for supplying power, in a non-contact manner, to power reception equipment from a power transmission apparatus to which a commercial power supply is fed, wherein there is provided a power adjusting section for adjusting a level of power to be transmitted according to power required by the power reception equipment. With this configuration, a single power transmission apparatus can supply power to different types of power reception equipment.

[0018] According to another aspect of the invention, a power supply system comprises: a primary side coil; a power transmission apparatus having a primary side circuit for feeding a pulse voltage to the primary side coil, the pulse voltage resulted from switching a DC voltage which is obtained by rectifying and smoothing a commercial power supply; a secondary side coil magnetically coupled to the primary side coil; and power reception equipment having a secondary side circuit for rectifying and smoothing an induced voltage induced across the secondary side coil, wherein there is provided a power adjusting section for adjusting a level of power to be transmitted according to power required by the power reception equipment. With this configuration, a single power transmission apparatus can supply power to different types of power reception equipment.

[0019] According to still another aspect of the invention, it is preferable that the primary side coil comprise either a coil with a plurality of taps each arranged on the coil at different turns thereof or comprise a plurality of coils each having a different number of turns, and the power adjusting section have a power change-over section for selecting, according to the power required by the power reception equipment, one from among the plurality of taps to which the pulse voltage is applied or have a power change-over section for selecting, according to the power required by the power reception equipment, one from among the plurality of coils to which the pulse voltage is applied. With this configuration, the levels of power transmitted from the power transmission apparatus can be selected depending on the power required by the power reception equipment.

[0020] According to still another aspect of the invention, it is preferable that the power adjusting section comprise a carrier wave oscillation circuit, included in the primary side circuit, for regularly supplying a carrier wave to the primary side coil, and a demodulation circuit, included in the primary side circuit, for receiving an information signal through the primary side coil and demodulating the received information signal, the information signal including information on the power reception equipment, modulated, and transmitted from the power reception equipment in response to the carrier wave, wherein the power adjusting section adjusts, in accordance with the information signal demodulated by the demodulation circuit, the level of power to be transmitted through a change-over operation performed by the power change-over section. With this configuration, the level of power s s transmitted from the power transmission apparatus can be adjusted according to the information signal fed from the power reception equipment.

[0021] According to still another aspect of the invention, the power transmission apparatus is incorporated in a utensil. Therefore, it is possible use a single type of power transmission apparatus for feeding power to different types of power reception equipment, thereby making it possible to achieve a power supply system contributing to space saving.

[0022] According to still another aspect of the invention, it is preferable that a signal transmission control circuit be provided for transmitting an information signal among the power transmission apparatus, the power reception equipment, and an external apparatus connected to the power

transmission apparatus. With this configuration, a power supply system capable of performing payment by using the power reception equipment can be realized.

DESCRIPTION OF THE DRAWINGS

[0023] This and other features of the present invention will become clear from the following description, taken in conjunction with the preferred embodiments with reference to the accompanying drawings in which:

[0024] **FIG. 1A** is a view showing an outer appearance of a power supply system embodying the present invention;

[0025] **FIG. 1B** is a view showing an outer appearance of the power supply system embodying the present invention in another state;

[0026] **FIG. 2A** is a representation for describing a schematic construction of the interior of a power transmission apparatus and a portable telephone shown in **FIG. 1A**;

[0027] **FIG. 2B** is an enlarged view showing coil portions in the interior of the power transmission apparatus and the portable telephone shown in **FIG. 2A**;

[0028] **FIG. 3** is a block diagram showing an electric configuration of a power supply system of a first embodiment of the present invention;

[0029] **FIG. 4** is a flowchart showing power supply operations in a power transmission apparatus shown in **FIG. 3**;

[0030] **FIG. 5** is a block diagram showing an electric configuration of a power supply system of a second embodiment of the present invention;

[0031] **FIG. 6** is a block diagram showing an electric configuration of a power supply system of a third embodiment of the present invention;

[0032] **FIG. 7** is a block diagram showing an electric configuration of a power supply system of a fourth embodiment of the present invention;

[0033] **FIG. 8** is a view showing an outer appearance of a power supply system of a fifth embodiment of the present invention;

[0034] **FIG. 9** is a view showing an outer appearance of a power supply system of a sixth embodiment of the present invention;

[0035] **FIG. 10A** is a block diagram showing an internal construction of a power supply system of a seventh embodiment of the present invention;

[0036] **FIG. 10B** is a block diagram showing an internal construction of the power supply system of a seventh embodiment of the present invention in another state;

[0037] **FIG. 11A** is a graph showing relationships between a relative position of a portable telephone to a power transmission apparatus and the absolute values of transmission efficiencies of power and a information signal;

[0038] **FIG. 11B** is a graph showing relationships between a relative position of the portable telephone to the power transmission apparatus and relative values of transmission efficiencies of power and the information signal;

[0039] **FIG. 12** is a table showing display states of LEDs by operating states of the power transmission apparatus;

[0040] **FIG. 13A** is a view showing an outer appearance of an example power supply system of an eighth embodiment of the present invention;

[0041] **FIG. 13B** is an enlarged view showing an outer appearance of a part of the power supply system shown in **FIG. 13A**;

[0042] **FIG. 13C** is a view showing an outer appearance of another example of the power supply system of the eighth embodiment of the present invention;

[0043] **FIG. 13D** is a view showing an outer appearance of another example of the power supply system of the eighth embodiment of the present invention;

[0044] **FIG. 13E** is a view showing an outer appearance of another example of the power supply system of the eighth embodiment of the present invention;

[0045] **FIG. 14** is a view showing an outer appearance of an example of a power supply system of a ninth embodiment of the present invention;

[0046] **FIG. 15A** is a view showing an outer appearance of a power supply system of a tenth embodiment of the present invention;

[0047] **FIG. 15B** is an enlarged view showing an outer appearance of a part of the power supply system shown in **FIG. 15A**;

[0048] **FIG. 16** is a view showing an outer appearance of a power supply system of an eleventh embodiment of the present invention;

[0049] **FIG. 17** is a view showing an outer appearance of a power supply system of a twelfth embodiment of the present invention;

[0050] **FIG. 18** is a view showing an outer appearance of a power supply system of a thirteenth embodiment of the present invention;

[0051] **FIG. 19** is a view showing an outer appearance of a power supply system of a fourteenth embodiment of the present invention;

[0052] **FIG. 20** is a view showing an outer appearance of a power supply system of a fifteenth embodiment of the present invention;

[0053] **FIG. 21** is a block diagram showing an electric configuration of a power supply system of a sixteenth embodiment of the present invention;

[0054] **FIG. 22** is a block diagram showing an electric configuration of the power transmission apparatus and the power reception equipment shown in **FIG. 21**;

[0055] **FIG. 23** is a flowchart showing a payment procedure using the power supply system shown in **FIG. 21**;

[0056] **FIG. 24** is a flowchart showing a procedure of mobile banking using the power supply system shown in **FIG. 21**;

[0057] **FIG. 25** is a flowchart showing another payment procedure using the power supply system shown in **FIG. 21**;

[0058] **FIG. 26** is a flowchart showing still another payment procedure using the power supply system shown in **FIG. 21**;

[0059] **FIG. 27** is a view showing an outer appearance of a conventional power supply system;

[0060] **FIG. 28** is a view showing an outer appearance of another conventional power supply system; and

[0061] **FIG. 29** is a view showing an outer appearance of still another conventional power supply system.

DESCRIPTION OF THE PREFERRED EMBODIMENTS

[0062] Description will be given of an embodiment of the present invention below with reference to the accompanying drawings. **FIGS. 1A and 1B** are views showing outer appearances of power supply systems embodying the present invention. In **FIGS. 1A and 1B**, a numerical symbol **1** indicates a power transmission apparatus for supplying power. **FIG. 1A** shows a case where power reception equipment is a portable telephone **2**, and **FIG. 1B** shows a case where the power reception equipment is a notebook PC **3**. The power transmission apparatus **1** is equipped with an AC plug **1***a* and a cord **1***b*. The AC plug **1***a* is inserted into a socket provided on a wall surface or the like to thereby feed a commercial power supply (AC 100 V) to the power transmission apparatus **1** through the cord **1***b*. The power transmission apparatus **1** converts the supplied AC 100 V to a DC voltage, thereafter, the DC voltage is subjected to switching and supplied to a battery of the portable telephone **2** or the notebook PC **3**, which is power reception equipment, so that the battery is charged by means of the non-contact power supply using magnetic coupling. The DC voltage can be also used as a power supply for directly driving the portable telephone **2** and the notebook PC **3**.

[0063] Since the power transmission apparatus **1** has functions of recognizing power reception equipment placed on the power transmission apparatus **1** so as to transmit power necessary for the power reception equipment thereto depending on the type, a single power transmission apparatus **1** can charge even batteries of electronic equipment different in power required for charging, such as the portable telephone **2** and the notebook PC **3**. Though not shown, any type of electronic equipment equipped with a battery, such as a digital camera, a camcorder, a PDA, or the like, can be charged similarly. The power transmission apparatus **1** is equipped with light emitting diodes (display section) LED**1** and LED**2** (hereinafter referred to simply as LED**1** and LED**2**) indicating an input state of AC 100 V, a state of power supply to power reception equipment, and other information. Description will be given of functions, operations, and others of the LED**1** and LED**2** later.

[0064] Next, description will be given of a principle of a non-contact transmission system with reference to **FIGS. 2A and 2B**. **FIGS. 2A and 2B** are schematic diagrams for describing schematic constructions of the interiors of the power transmission apparatus **1** and the portable telephone **2** shown in **FIG. 1A**. **FIG. 2A** is an entire view showing the power transmission apparatus **1** and the portable telephone **2**. **FIG. 2B** shows an enlarged view of coil portions. In **FIGS. 2A and 2B**, the same constituents as in **FIG. 1** are attached with the same symbols and descriptions thereof will not be given herein. As shown in **FIG. 2A**, the power transmission apparatus **1** includes a primary side circuit **10** and a primary side coil **11**, and the portable telephone **2** includes a secondary side coil **12**, a secondary side circuit **13**, and a charge control circuit **14**.

[0065] The primary side circuit **10** full-wave rectifies and smoothes AC 100 V supplied through the AC plug **1***a* and the cord **1***b* to convert the AC 100 V once to a DC voltage, and thereafter the DC voltage is subjected to switching to obtain a pulse voltage which is then supplied to the primary side coil **11**. The primary side coil **11** and the secondary side coil **12** constitute a transformer through magnetic coupling between a primary side core (ferrite) **15** and a secondary side core (ferrite) **16**, wherein when the pulse voltage obtained by switching is applied across the primary side coil **11**, a voltage is induced across the secondary side coil **12** by magnetic coupling depending on a turns ratio between the primary side coil **11** and the secondary side coil **12**. The induced voltage is rectified to a DC voltage and smoothed in the secondary side circuit **13**; the resultant DC voltage is supplied to a charge control circuit **14**; and the charge control circuit **14** charges a battery with the supplied DC voltage. In this way, a non-contact power supply is performed from the power transmission apparatus **1** to the portable telephone **2**.

[0066] A signal including such as information on power supply or the like is transmitted between the primary side circuit **10** and the secondary side circuit **13** by the non-contact transmission method. The transmission of the signal is performed for the purposes described below. First, when power is transmitted in a state where a piece of metal or the like is placed on the power transmission apparatus **1**, a problem arises that the piece of metal produces heat due to occurrence of an eddy current therein. Therefore, the signal is transmitted to recognize whether or not equipment that can receive power is placed. Second, in order to transmit necessary power for the power reception equipment, the power transmission apparatus **1** side should perform a change-over selection from among coils and circuits. Therefore, the power transmission apparatus **1** should recognize information on power required by the power reception equipment. Third, when the power reception equipment is fully charged, it is necessary to cease power transmission (for saving energy). Therefore, the power transmission apparatus **1** should recognize whether or not the full charge is achieved.

[0067] **FIG. 3** is a block diagram showing an electric configuration of a power supply system of a first embodiment of the present invention. In **FIG. 3**, the same constituents as in **FIGS. 1A, 2A**, and **2B** are attached with the same symbols and descriptions thereof will not be given herein.

[0068] In **FIG. 3**, a commercial power supply (AC 100 V) is externally fed from the AC plug **1***a* through the cord **1***b*, and the supplied AC 100 V is full-wave rectified in a rectification circuit **21** in the primary side circuit **10** and thereafter smoothed in a smoothing circuit constituted of a coil L**1** and a capacitor C**1** so as to be converted into a DC voltage. A pulse voltage obtained by subjecting the DC voltage to switching in a switching circuit **22** is supplied to the primary side coil **11** through transistors (power change-over section) TR**11**, TR**12**, and TR**13**.

[0069] All of the transistors TR**11**, TR**12**, and T**13** are NPN-type transistors, and collectors thereof are all connected to an output terminal of the switching circuit **22**. An emitter of the transistor TR**11** is connected to one end of the

primary side coil **11** and the other end of the primary side coil **11** is grounded. The primary side coil **11** has taps a, b, and c in the descending order of a distance from the grounded coil end, i.e., in the descending order of the number of turns. An emitter of the transistor TR**12** is connected to the tap a, and an emitter of the transistor TR**13** is connected to the tap b. The tap c is connected to a demodulation circuit **36** and a carrier wave oscillation circuit **37** in a power transmission control IC (power adjusting section) **24** that performs power transmission control of the primary side circuit **10**.

[**0070**] Bases of the transistors TR**11**, TR**12**, and TR**13** are all connected to a power change-over circuit (power change-over section) **32** in the power transmission control IC **24**. The power transmission control IC **24** is an IC including a LED display circuit **31**, the power change-over circuit **32**, a power transmission enable/disable determination circuit **33**, a power amount determination circuit **34**, a full-charge determination circuit **35**, a demodulation circuit **36**, and the carrier wave oscillation circuit **37**, and takes on a shape of an IC chip for achieving a compact and lower-profile shape. Description will be given of functions and operations of the respective circuits later. Note that the transistors TR**11**, TR**12**, and TR**13** may be replaced with different switching elements such as MOSFETs, selector switches, or the like.

[**0071**] The pulse voltage obtained by switching in the switching circuit **22** is supplied to the transformer **23** as well. Then, the pulse voltage is converted to a predetermined voltage by the transformer **23**, rectified by the rectification circuit **25**, and smoothed by a smoothing circuit constituted of a coil L**2** and a capacitor C**2** so as to be converted to a DC voltage. The DC voltage is applied to control circuits and the like in the primary side circuit **10** as a power supply Vcc for controlling the primary side circuit **10**.

[**0072**] The collectors of the NPN-type transistors TR**1** and TR**2** are connected to the power supply Vcc, the emitter of the transistor TR**1** is connected to an anode of the LED**1** through a current limiting resistor R**1**, and a cathode of the LED**1** is grounded. On the other hand, the emitter of the transistor TR**2** is connected to an anode of the LED**2** through a current limiting resistor R**2**, and a cathode of the LED**2** is grounded. The bases of the transistors TR**1** and TR**2** are connected to the LED display circuit **31** in the power transmission control IC **24**.

[**0073**] By this configuration, when the LED display circuit **31** turns on the transistor TR**1**, the LED **1** emits light, and when the LED display circuit **31** turns on the transistor TR**2**, the LED**2** emits light. The LED**1**, under control of an unillustrated lighting control circuit or the like, emits light in red, yellow, green, purple, or orange according to a signal from the LED display circuit **31**. The LED**2** also has a function of emitting light in red or green in a similar manner. Note that the transistors TR**1** and TR**2** may be different switching elements such as MOSFETs or the like.

[**0074**] Next, description will be given of the portable telephone **2** side. A smoothing capacitor C**4** and a rectification circuit **41** are connected to both ends of the secondary side coil **12**, and an induced voltage across the secondary side coil **12** is full-wave rectified in the rectification circuit **41** and, thereafter, smoothed by a smoothing circuit constituted of a coil L**3** and a capacitor C**3** and converted to a DC voltage. The DC voltage is supplied to a power-on reset circuit (carrier wave detection circuit) **44**, a power clamp circuit **46**, and a regulator **47** in a power receiving side control IC (power adjusting section) **42** that performs power receiving control of the secondary side circuit **13**.

[**0075**] The power-on reset circuit **44** is a circuit that detects a DC voltage obtained by converting a carrier wave transmitted from the primary side circuit **10** described later and thereby, determines that a request for an information signal has been issued from the power transmission apparatus **1** so as to reset the power receiving control IC **42** to cause transmission of the information signal to be started. The voltage clamp circuit **46** is a circuit in which the DC voltage obtained by the conversion is clamped at a predetermined voltage to thereby prevent circuits from being subjected to voltage breakdown, and the regulator **47** converts the DC voltage obtained by the conversion to a predetermined voltage used for charging and supplies the predetermined voltage to the charge control circuit **14**. The power receiving control IC **42** is further provided with a clock extraction circuit **43** connected to the secondary side coil **12** and a modulation circuit **45**, and performs a signal processing for a signal transmitted through the primary side coil **11** and the secondary side coil **12**. Note that the power receiving control IC **42** is in the shape of an IC chip so that a compact and lower-profile shape of the portable telephone **2** is achieved.

[**0076**] Next, description will be given of power supply operations in the power transmission apparatus **1** and the portable telephone **2** having such a configuration with reference to **FIG. 4**. **FIG. 4** is a flowchart showing power supply operations in the power transmission apparatus **1**. The power transmission apparatus **1** starts its operation when AC 100 V is supplied thereto. First, when AC 100 V is inputted, the power supply Vcc for control is supplied to the power transmission control IC **24**. Then, the LED display circuit **31** turns on the LED **1** in red and turns off the LED**2** (step S**1**). The carrier wave oscillation circuit **37** outputs a predetermined carrier wave at constant intervals (step S**2**) so that whether or not the power reception equipment is placed on the power transmission apparatus **1** is determined (step S**3**). Description will be given below of a method for determining whether or not the power reception equipment is placed.

[**0077**] The carrier wave outputted from the carrier wave oscillation circuit **37** is supplied to the tap c of the primary side coil **11**, and in a case where the portable telephone **2** is placed on the power transmission apparatus **1**, the carrier wave is transmitted to the secondary side coil **12** which is magnetically coupled with the primary side coil **11**. The carrier wave transmitted onto the secondary side coil **12** is rectified and smoothed by the rectification circuit **41**, the coil **3**, and the capacitor C**3**, and thereby converted to a DC voltage. The power-on reset circuit **44** detects the DC voltage obtained by converting the carrier wave and thereby recognizes that the carrier wave has been transmitted. The clock extraction circuit **43** connected to the secondary side coil **12** extracts a clock signal required for modulation from the carrier wave, and the modulation circuit **45** modulates the carrier wave based on information regarding the portable telephone **2**, namely, "code indicating being power reception equipment", "information on consumed power", and "information on full charge" and supplies the modulated wave to the secondary side coil **12**. A modulation system adopted at

this time is a phase modulation in which a carrier wave is cyclically intensity modulated to express 0/1 information with phase change information of a signal. In such a way, since a clock signal necessary for modulation is extracted from the carrier wave transmitted from the power transmission apparatus **1**, no necessity arises for the portable telephone **2**, which is power reception equipment, to have an oscillation circuit therein. Furthermore, since power supplied from the carrier wave is used as a driving power for the clock extraction circuit **43** and the modulation circuit **45**, no necessity arises for the portable telephone **2**, which is power reception equipment, to have a power supply therein, thereby enabling simplification of a circuit to be achieved.

[**0078**] The modulated wave supplied to the secondary side coil **12** from the modulation circuit **45** is transmitted to the primary side coil **11** magnetically coupled thereto. The demodulation circuit **36** connected to the tap c of the primary side coil **11** receives and demodulates the transmitted modulated wave and supplies the "code indicating being power reception equipment", "information on consumed power", and "information on full charge", which are included in the demodulated information signal, to the power transmission enable/disable determination circuit **33**, the power amount determination circuit **34**, and the full-charge determination circuit **35**. Herein, the power transmission enable/disable determination circuit **33** determines whether or not power reception equipment is placed on the power transmission apparatus **1**, based on the "code indicating being power reception equipment" (step S**3**). If a predetermined "code indicating being power reception equipment" is received, it is determined that power reception equipment is placed on the power transmission apparatus **1** and it is determined whether or not the power reception equipment is correctly placed on the power transmission apparatus **1** (step S**4**). On the other hand, unless the predetermined "code indicating being power reception equipment" is received, it is determined that no power reception equipment is placed on the power transmission apparatus **1**, and the carrier wave is outputted again (step S**2**).

[**0079**] Next, as for determination on whether or not the power reception equipment is correctly placed on the power transmission apparatus **1**, the meaning of this phrase is whether or not the coil of the power receiving side and the coil of the power transmission side are arranged at positions where a high power transmission efficiency in a non-contact power supply system is obtained. In other words, whether or not the transmission apparatus **1** and the portable telephone **2** which is power reception equipment, shown in **FIG. 2**, are arranged at positions where a high coupling degree in magnetic coupling is established between the primary side core **15** of the power transmission apparatus **1** and the secondary side core **16** of the portable telephone **2**.

[**0080**] **FIGS. 11A and 11B** are graphs showing relationships between a relative position of the portable telephone **2** to the power transmission apparatus **1** (a positional deviation of the portable telephone **2** from the power transmission apparatus **1**) and a transmission efficiency of power and the information signal. Herein, the term "information signal" means the modulated wave transmitted back from the secondary side circuit **13** in response to a carrier wave transmitted from the primary side circuit **10**. **FIG. 11A** shows the absolute values of the transmission efficiencies of power (in solid line) and the information signal (in broken line). **FIG. 11B** shows relative values of transmission efficiencies of power (in solid line) and the information signal (in broken line). In either of **FIGS. 11A and 11B**, the abscissas are assigned to a deviation of the portable telephone **2** which is power reception equipment, from the power transmission apparatus **1**. When the power transmission apparatus **1** and the portable telephone **2** are located at positions where the highest coupling degree in magnetic coupling is established between the primary side core **15** of the power transmission apparatus **1** and the secondary side core **16** of the portable telephone **2**, the deviation is given 0, deviations in a left-to-right direction or a forward-to-rearward direction of the portable telephone **2** from the position with the deviation of 0 are measured in units of mm.

[**0081**] As shown in **FIG. 11A**, the larger the deviation of the portable telephone **2** from the power transmission apparatus **1** becomes, the lower the transmission efficiencies of both power and information signal drop. Since the transmission efficiencies of power and information signal are, as shown in **FIG. 11B**, reduced at the same rate with an increase in deviation of the portable telephone **2** from the power transmission apparatus **1**, a deviation of the portable telephone **2** from the power transmission apparatus **1** can be recognized by measuring a signal intensity of the information signal even in a state where the power transmission apparatus **1** transmits no power.

[**0082**] Since the larger the positional deviation of the portable telephone **2** from the power transmission apparatus **1** becomes, the lower the transmission efficiencies of power and information signal drop, there will be no meaning to transmit the power, because the portable telephone **2** is not capable of receiving it in a case where the power transmission efficiency is extremely low. Therefore, it is determined whether or not the positional deviation of the portable telephone **2** from the power transmission apparatus **1** exceeds a predetermined value (step S**4**). If it exceeds, no power transmission is performed from the power transmission apparatus **1**, and the LED**1** is turned on in orange and the LED **2** is turned off as a warning indication (step S**5**). In this situation, a warning sound may be emitted instead.

[**0083**] On the other hand, if the positional deviation of the portable telephone **2** from the power transmission apparatus **1** does not exceed the predetermined value, the process moves to a process for determining a level of power to be transmitted (step S**6**). The determination process is performed in the power amount determination circuit **34** based on the "information on consumed power" included in the information signal demodulated in the demodulation circuit **36**. The power of the portable telephone **2** is recognized based on the "information on consumed power". A power transmission output is adjusted at one of three levels of large, medium, and small depending on the recognized power. A result of the determination from the power amount determination circuit **34** is transmitted to the LED display circuit **31** and the power change-over circuit **32** so as to perform the process described below in response to one of the large, medium, and small levels as the result of the determination.

[**0084**] If the determination result shows the small level, the LED display circuit **31** turns on the LED**1** in yellow and turns on and off the LED**2** in red (step S**7**) so as to indicate that power transmission is performed at the small level. At the same time, the power change-over circuit **32** turns on the

transistor TRI1. When the transistor TRI1 is turned on, a pulse voltage from the switching circuit **22** is applied across the total length of the primary side coil **11** to start power transmission (step S**8**). Then, when the determination result shows the medium level, the LED display circuit **31** turns on the LED**1** in green and turns on and off the LED**2** in red (step S**9**) so as to indicate that power transmission is performed at the medium level. Moreover, the power change-over circuit **32** turns on the transistor TR**12**. When the transistor TR**12** is turned on, a pulse voltage from the switching circuit **22** is applied to the tap a of the primary side coil **11** to start power transmission (step S**10**). When the determination result shows the large level, the LED display circuit **31** turns on the LED**1** in purple and turns on and off the LED**2** in red (step S**11**) so as to indicate that power transmission is performed at the large level. Moreover, the power change-over circuit **32** turns on the transistor TR**13**. When the transistor TR**13** is turned on, a pulse voltage from the switching circuit **22** is applied to the tap b of the primary side coil **11** to start power transmission (step S**12**).

[**0085**] By selecting one from among the transistors TR**11**, TR**12**, and TR**13**, a location of the winding of the primary side coil **11** at which a pulse voltage from the switching circuit is applied changes. That is, since an actual effective number of turns of the primary side coil changes, a turns ratio of the primary side coil **11** to the secondary side coil **12** changes. In such a way, power in accordance with the power required by the power reception equipment can be transmitted. Note that, although the present embodiment shows that the power transmission output is selected from among the three levels, large, medium, and small, the number of levels may be increased.

[**0086**] Even after the power transmission is started, the carrier wave is regularly transmitted (step S**13**), and it is checked whether or not the portable telephone **2** which is power reception equipment, has been removed from on the power transmission apparatus **1** according to the information included in the modulated wave transmitted back against the carrier wave (step S**14**). In the confirmation, the power transmission enable/disable determination circuit **33** determines, in a similar manner to that in step S**3**, whether or not the power reception equipment is placed on the power transmission apparatus **1**, based on the "code indicating being power reception equipment". If a predetermined "code indicating being power reception equipment" has not been received, it is determined that the power reception equipment has been removed from on the power transmission apparatus **1**, and the power change-over circuit **32** turns off all of the transistor TR**11**, TR**12**, and TR**13** to cease power transmission (step S**15**).

[**0087**] On the other hand, if the predetermined "code indicating being power reception equipment" has been received, it is recognized that the power reception equipment has been placed on the power transmission apparatus **1**, and then, it is determined whether or not the power reception equipment has been placed correctly on the power transmission apparatus **1** (step S**16**). The determination is performed in a similar manner to that in step S**4** by determining whether or not a deviation of the portable telephone **2** from the power transmission apparatus **1** exceeds a predetermined value. If the positional deviation exceeds the predetermined value, no power transmission is performed from the power transmission apparatus **1**. Then, in a similar manner to that in step **5**, the LED**1** is turned on in orange and the LED**2** is turned off as a warning indication (step S**17**). In this situation, a warning sound may be emitted instead.

[**0088**] On the other hand, if the positional deviation of the portable telephone **2** from the power transmission apparatus **1** does not exceed the predetermined value, then the process moves to a process in which it is determined whether or not the portable telephone **2** has been fully charged (step S**18**). The determination process is performed in a way such that the full-charge determination circuit **35** determines whether or not the portable telephone **2** is in a state of full charge, based on the "information on full charge" included in the information signal demodulated in the demodulation circuit **36**. If the information shows a state of full charge, the power change-over circuit **32** turns off all of the transistors TR**11**, TR**12**, and TR**13** to cease power output (step S**19**), and the LED**1** is turned on in red and the LED**2** is turned on in green (step S**20**) so as to indicate that the power transmission ceases, because the power reception equipment is in a full charge sate. Thereafter, the carrier wave is outputted to thereby continue confirmation of a state of the power reception equipment (step S**13**). On the other hand, if the information does not show a state of full charge, the confirmation of a state of the power reception equipment continues while performing power transmission (step S**13**). In this way as described above, a non-contact power supply is performed from the power transmission **1** to the portable telephone **2**.

[**0089**] While description has been given of the case where operation states and others of the power transmission apparatus **1** (presence or absence of power transmission, transmission power level, and fully charged or not) are represented by display colors and states of lighting (turning off, turning on, and turning on and off) of the LEDs, description will be given of display behaviors of the LED**1** and LED**2** below with reference to **FIG. 12**. **FIG. 12** is a table showing display states of the LEDs corresponding to operating states of the power transmission apparatus **1**. First, when the AC plug **1***a* is not connected to the commercial power supply (AC 100 V), the LED**1** is turned off and the LED**2** is turned off. When the AC plug **1***a* is connected to AC 100 V, the LED**1** is turned on in red and the LED**2** is turned off. Depending on the level of the power being transmitted among the large, medium, and small levels, based on the information of the power reception equipment, the LED**1** is turned on in purple and the LED**2** is turned on and off in red for the large level; the LED**1** is turned on in green and the LED**2** is turned on and off in red for the medium level; and the LED**1** is turned on in yellow and the LED**2** is turned on and off in red for the small level. In a case where the power reception equipment is being charged or in a state of full charge, the LED**2** is turned on and off in red during charging; and the LED**2** is turned on in green in the state of full charge. In a case where the power reception equipment has been placed on the power transmission apparatus **1** with a positional deviation of the predetermined value or more, the LED**1** can be turned on in orange together with a warning sound emission. With such display states adopted, a user can visually judge the operating state of the power transmission apparatus. Note that locations of the LEDs and combinations of colors, turning on, turning on and off, turning off, and the like of the LEDs are exemplified above, on which no specific limitation is placed.

[0090] **FIG. 5** is a block diagram showing an electric configuration of a power supply system of a second embodiment of the present invention. In **FIG. 5**, the same constituents as in **FIG. 3** are attached with the same symbols and descriptions thereof will not be given herein. The power supply system shown in **FIG. 5** is different from the power supply system shown in **FIG. 3** in that a primary side coils **11***x*, **11***y*, and **11***z* are provided instead of the primary side coil **11** of the power transmission apparatus **1**. The three primary side coils are attached with the symbols **11***x*, **11***y*, and **11***z* in the descending order of the number of turns thereof, and one ends thereof are all grounded. Other end of the primary side coil **11***x* is connected to the emitter of the transistor TR**11**; other end of the primary side coil **11***y* is connected to the emitter of the transistor TR**12**; and other end of the primary side coil **11***z* is connected to the emitter of the transistor TR**13**. The coils are provided with a tap d (on the primary side coil **11***x*), a tap e (on the primary side coil **11***y*), and a tap f (on the primary side coil **11***z*) respectively, at points where the number of turns are the same from the grounded ends of the coils. The taps d, e, and f are all connected to the demodulation circuit **36** and the carrier wave oscillation circuit **37**. Note that, although the primary side coils **11***x*, **11***y*, and **11***z* are illustrated apart from one another in **FIG. 5**, the primary side coils are actually disposed very close to one another. Therefore, the secondary side coil **12** can be disposed in close proximity to any of the three primary side coils.

[0091] In this embodiment, the power transmission apparatus **1** has the configuration in which three coils for power transmission and respective transistors are provided. It is also possible to transmit power in the same manner as in the case of the power transmission apparatus **1** shown in **FIG. 3** where one primary side coil **11** is used. In this embodiment, to be specific, one of the transistors is selected by the power change-over circuit **32** according to the level of power to be transmitted determined from the signal containing the "information on consumed power" received from the portable telephone **2**. Accordingly, a coil for transmitting power can be selected, and power required for the power reception equipment can be transmitted. For example, in a case where the power of the power reception equipment is small, a coil with a large number of turns is used. In a case where the power of the power reception equipment is large, a coil with a small number of turns is used.

[0092] While in the embodiments shown in **FIGS. 3 and 5**, transmission of the information signal between the power transmission apparatus **1** and the portable telephone **2** is performed using the same coil as in the power supply, the power supply coil and the signal transmission coil may be separated from each other as shown in FIG. **6**.

[0093] **FIG. 6** is a block diagram showing an electric configuration of a power supply system of a third embodiment of the present invention. In **FIG. 6**, the same constituents as in **FIG. 3** are attached with the same symbols and descriptions thereof will not be given herein. The power supply system shown in **FIG. 6** is different from the power supply system shown in **FIG. 3** in that primary side coils **11***a* and **11***b* are provided instead of the primary side coil **11** of the power transmission apparatus **1**, and secondary side coils **12***a* and **12***b* are provided instead of the secondary side coil **12** of the portable telephone **2**.

[0094] In the power transmission apparatus **1** shown in **FIG. 3**, the demodulation circuit **36** and the carrier wave oscillation circuit **37** are connected to the tap c of the primary side coil **11**. However, in the power transmission apparatus **1** shown in **FIG. 6**, the demodulation circuit **36** and the carrier wave oscillation circuit **37** are connected to one end of the primary side coil **11***b*, and the other end of the primary side coil **11***b* is grounded. Therefore, the primary side coil **11***a* serves as a coil dedicated to the power transmission, and the primary side coil **11***b* serves as a coil dedicated to the signal transmission. Furthermore, the secondary side coils **12***a* and **12***b* are connected in parallel instead of a single secondary side coil **12** of the portable telephone **2** shown in **FIG. 3**. The secondary side coil **12***a* serves as a coil dedicated to the power transmission, and the secondary side coil **12***b* serves as a coil dedicated to the signal transmission. With such a configuration in which the power transmission coil and the signal transmission coil are separated from each other, it is also possible to transmit power required for the power reception equipment in a similar manner to the case where the power and the signal are transmitted through one primary side coil **11** and one secondary side coil **12** as in the power transmission apparatus **1** shown in **FIG. 3**. In a case where the signal transmission coil and the power transmission coil are electrically separated from each other as are in the case of the primary side coils **11***a* and **11***b*, it is possible to reduce a withstand voltage required of electronic components or the like used in control circuits such as the demodulation circuit **36** to which the signal is transmitted.

[0095] **FIG. 7** is a block diagram showing an electric configuration of a power supply system of a fourth embodiment of the present invention. In **FIG. 7**, the same constituents as in **FIG. 3** are attached with the same symbols and descriptions thereof will not be given herein. The power supply system shown in **FIG. 7** is different from the power supply system shown in **FIG. 3** in that the carrier wave oscillation circuit **37** in the primary side circuit **10** of the power transmission apparatus **1** is removed, a current voltage detection circuit **38** detecting a change in current flowing in and/or voltage appearing across the primary side coil **11** is provided instead of the demodulation circuit **36**. The clock extraction circuit **43**, the power-on reset circuit **44**, and the demodulation circuit **45** of the secondary side circuit **13** of the portable telephone **2** are removed.

[0096] In performing power supply from the power transmission apparatus **1** to the portable telephone **2** as described above, it is necessary to recognize the three types of information. The first one is to recognize whether or not power reception equipment is placed. The second one is to recognize power required for the power reception equipment. The third one is to recognize whether or not the power reception equipment has been fully charged. As for the first one, since the current flowing in and/or the voltage appearing across the primary side coil **11** change depending on whether or not the equipment placed on the power transmission apparatus **1** can receive power, the presence or the absence of the equipment can be recognized by a change in the current and/or the voltage.

[0097] For example, in a case where the power transmission apparatus **1** turns on one of the transistors TR**1**, TR**2**, and TR**3**, and performs power transmission, the current flowing in and/or the voltage appearing across the primary

side coil **11** detected by the current voltage detection circuit **38** change when an item that can not receive power such as a piece of metal is placed on the power transmission apparatus **1**. However, a way of the change is different from a case where equipment that can receive power is placed. A pattern of the change is measured in advance, that pattern is compared with the actually measured pattern, and thereby the power transmission enable/disable determination circuit **33** determines whether or not an item placed is a piece of metal or equipment that can receive power. In a case where the power transmission enable/disable determination circuit **33** determines that no item that can receive power is placed, the power change over circuit **22** is controlled so that the transistors TR**11**, TR**12**, and TR**13** are all turned off to thereby enable power transmission to be ceased. With such a configuration adopted, an accidentally placed piece of metal or the like does not produce heat to establish safety.

[**0098**] On the other hand, in a case where equipment that can receive power, for example the portable telephone **2**, is placed, a change is observed in the current flowing in and/or the voltage appearing across the primary side coil **11** detected by the current voltage detection circuit **38**, because the portable telephone **2** has a proper impedance. A pattern of the change is measured in advance, and that pattern is compared with the actually detected pattern, and thereby the power transmission enable/disable determination circuit **33** determines whether or not an item placed is power reception equipment. If the power transmission enable/disable circuit **33** determines that equipment that can receive power is placed, the power change-over circuit **32** is changed over, wherein one of the transistors TR**1**, TR**2**, and TR**3** is selectively turned on to thereby enable power transmission to be performed.

[**0099**] Next, as for the second recognition, since the number of turns of the coil used in the power reception equipment is different depending on a difference in power of the power reception equipment, the current flowing in and/or the voltage appearing across the primary side coil **11** change depending on a difference in power of the placed power reception equipment. Hence, it is possible to recognize the information on power required by the power reception equipment placed on the power transmission apparatus **1**. For example, in a case where power transmission gets started by turning on one of the transistors TR**1**, TR**2**, and TR**3**, and at that time, one of a large change, a medium change, and a small change occurs in the current flowing in and/or the voltage appearing across the primary side coil **11** detected by the current voltage detection circuit **38**. Then, the power amount determination circuit **34** determines whether power of the portable telephone **2** is large power, medium power, or small power. Accordingly, the power change over circuit **32** is controlled to select one of large, medium, and small levels. In such a way, power of the portable telephone **2** is recognized to thereby enable a power level to be transmitted to be adjusted.

[**0100**] Next, as for the third recognition, with progress in charging of the power reception equipment, current flowing in the power reception equipment decreases. In this situation, since current flowing in the primary side coil **11** also decreases, a change in current flowing in the primary side coil **11** is detected to thereby enable whether or not the power reception equipment reaches a fully charged condition (charging has been completed or not) to be recognized. For example, while one of the transistors TR**1**, TR**2**, and TR**3** is turned on, and thereby power transmission is performed, the full-charge determination circuit **35** determines whether or not the portable telephone **2** has been fully charged based on the change in the current flowing in the primary side coil **11** detected by the current voltage detection circuit **38**. If a fully charged condition is determined, the power change-over circuit **32** is controlled so that the transistors TR**11**, TR**12**, and TR**13** are all turned off to enable power transmission to be ceased.

[**0101**] In this way, power depending on the power requirement of the power reception equipment can be transmitted only when the power reception equipment that can receive power is placed on the power transmission apparatus **1**. When the placed power reception equipment has been fully charged, power transmission can be ceased. With this arrangement, it is not necessary to transmit an information signal between the power transmission apparatus **1** and the portable telephone **2**, thereby enabling a power supply system to be simplified.

[**0102**] **FIG. 8** is a view showing an outer appearance of a power supply system of a fifth embodiment of the present invention. In **FIG. 8**, the same constituents as in **FIG. 1A** are attached with the same symbols and descriptions thereof will not be given herein. In **FIG. 8**, there are shown a state where the power transmission apparatus **1** and the portable telephone **2** are separated away from each other and a state where the portable telephone **2** is placed on the power transmission apparatus **1**. A protrusion **151** is, as shown in **FIG. 8**, formed on the power transmission apparatus **1**, while a depression **152** is formed on the portable telephone **2**. The protrusion **151** and the depression **152** are engaged with each other to thereby enable positioning of the power transmission apparatus **1** and the portable telephone **2** to be established. Moreover, though not shown, a depression **152** in absolutely the identical shape as found on the portable telephone **2** can be formed on different types of power reception equipment such as notebook PCs, digital cameras, PDAs, or the like, thereby enabling positioning of each type of equipment with the power transmission apparatus **1** to be established. With this structure, a single power transmission apparatus **1** can be commonly used for many types of power reception equipment.

[**0103**] **FIG. 9** is a view showing an outer appearance of a power supply system of a sixth embodiment of the present invention. In **FIG. 9**, the same constituents as in **FIG. 8** are attached with the same symbols and descriptions thereof will not be given herein. In **FIG. 9**, there are shown a state where the power transmission apparatus **1** and the portable telephone **2** are separated away from each other and a state where the portable telephone **2** is placed on the power transmission apparatus **1**. A mark **153** indicating a chargeable region and an auxiliary mark (cross-shaped mark) **154** for positioning are provided on the power transmission apparatus **1**, and a mark **155** for positioning is provided on the portable telephone **2**. The portable telephone **2** is placed on the power transmission apparatus **1** so that the mark **155** of the portable telephone **2** is included in the chargeable region thereof. In other words, the mark **155** and the mark **153** are superimposed on each other to thereby enable the portable telephone **2** to be charged. Moreover, though not shown, the mark **155** in absolutely the identical shape as found on the portable telephone **2** can be formed on different

power reception equipment such as notebook PCs, digital cameras PDAs, or the like, thereby enabling positioning of each type of equipment with the power transmission apparatus **1** to be established. With this structure, a single power transmission apparatus **1** can be commonly used for many types of power reception equipment. In such a positioning with marks, it is not necessary to form the protrusion and the depression as provided in the embodiment shown in **FIG. 8**, thereby enabling the power transmission apparatus **1** and the portable telephone **2** to assume a low profile shape.

[**0104**] **FIGS. 10A and 10B** are block diagrams showing internal constructions of a power supply system of a seventh embodiment of the present invention. In **FIG. 10A**, there is shown a state where a conventional portable telephone **101** is placed on the power transmission apparatus **1**, and in **FIG. 10B**, there is shown a state where the portable telephone **2** is placed on the power transmission apparatus **1**. In **FIGS. 10A and 10B**, the same constituents as in **FIG. 2A** are attached with the same symbols and descriptions thereof will not be given herein.

[**0105**] The power transmission apparatus **1** shown in **FIGS. 10A and 10B** is different from the power transmission apparatus **1** shown in **FIG. 1** in that power transmission electrodes **117***a* and **117***b* for supplying power in a contact manner, an inter-electrode current detection circuit **118** for monitoring current flowing between the power transmission electrodes **117***a* and **117***b*, and a power route change-over circuit **119** are added so as to be used for the conventional portable telephone **101** as well so that charging can be also performed with power supplied through power receiving electrodes **101***a* and **101***b* that are kept in contact.

[**0106**] The inter-electrode current detection circuit **118** monitors current flowing between the power transmission electrodes **117***a* and **117***b*, and if the conventional portable telephone **101** of a contact charge type, as shown in **FIG. 10A**, is placed on the power transmission apparatus **1** and the power receiving electrodes **101***a* and **101***b* for charging are brought into contact with the respective power transmission electrodes **117***a* and **117***b*, current flows between the power transmission electrodes **117***a* and **117***b*, and thereby the presence of the portable telephone **10** is recognized. In a case where the contact charge type portable telephone **101** is recognized, power is supplied only to the side of the power transmission electrodes **117***a* and **117***b* by the power route change-over circuit **119**. On the other hand, in a case where a non-contact charge type portable telephone **2** is, as shown in **FIG. 10B**, placed, power is supplied only to the primary side coil **11** by the power route change-over circuit **119** to thereby perform power supply according to a method similar to that in the embodiments that have been described so far. In such a way, a single power transmission apparatus **1** can supply power to both the portable telephones of the contact and non-contact types. Though not shown, a charger for digital cameras, PDAs, or the like can be operated in a similar way by both the contact type and the non-contact type.

[**0107**] **FIGS. 13A** to **13**E are views showing outer appearances of power supply systems of an eighth embodiment of the present invention. The power supply systems shown in **FIGS. 13A** to **13**E are characterized by that the power transmission apparatus **1** shown in one of **FIGS. 1A, 1B, 2**A, **2**B, **3**, **5** to **9**, **10**A, and **10**B is embedded in a top plate of a desk (utensil), of which some examples are shown. In **FIG. 13A**, there is shown an outer appearance of a study desk **51** placed in a study room or the like and having a top plate **51***a* in which a power transmission apparatus **1** is embedded. In **FIG. 13B**, there is shown a partial enlarged view of a portion **51***b*, in which the power transmission apparatus **1** is embedded, of the top plate **51***a*. The power transmission apparatus **1** is embedded the inside of the top plate **511***a* so as not to protrude from the surface of the top plate **51***a*.

[**0108**] In **FIG. 13C**, there is shown an outer appearance of a conference desk placed in a conference room or the like and having a top plate **52***a* in which power transmission apparatuses **1** are embedded. In **FIG. 13C**, a numerical symbol **52***b* indicates portions where the power transmission apparatuses **1** are embedded. The power transmission apparatuses **1** are embedded in the same manner as in **FIG. 13B**. In **FIG. 13D**, there is shown an outer appearance of a dining table **53** placed in an eating house or the like and having a top plate **53***a* in which a power transmission apparatus **1** is embedded. In **FIG. 13D**, a numerical symbol **53***b* indicates a portion where the power transmission apparatus **1** is embedded. The power transmission apparatus **1** is embedded in the same manner as in **FIG. 13B**. In **FIG. 13E**, there is shown an outer appearance of a table **54** provided in a train and having a top plate **54***a* in which a power transmission apparatus **1** is embedded. In **FIG. 13E**, a numerical symbol **54***b* indicates a portion where the power transmission apparatus **1** is embedded. The power transmission apparatus **1** is embedded in the same manner as in **FIG. 13B**. Note that, although an AC plug and a cord for supplying the commercial power supply (AC 100 V) to the embedded power transmission apparatus or apparatuses **1** are not shown, the commercial power supply is fed to the embedded power transmission apparatus or apparatuses **1** through a power supply cord or the like embedded in the interiors of the desk or the table and the top plate thereof shown in **FIGS. 13A** to **13**E.

[**0109**] In **FIGS. 13A** to **13**E, a numerical symbol **2** indicates the portable telephone shown in one of **FIGS. 1A, 2A**, **2**B, **3**, **5** to **9** and **10**B. A numerical symbol **3** indicates the notebook PC shown in **FIG. 1B**. The power transmission apparatus **1** embedded in the top plate of each of the various kinds of desks or tables, when the portable telephone **2** or the notebook PC **3** is placed at the portion where the power transmission apparatus **1** is embedded, power required for the portable telephone **2** or the notebook PC **3** thus placed is detected as described above, and thereby, power to be transmitted is adjusted and supplied. This means that, a single power transmission apparatus **1** can supply power to any of various kinds of power reception equipment placed on a desk in which said one transmission apparatus **1** is embedded. By embedding the power transmission apparatus in the top plate of a desk, not only is a space which an AC adapter and a charger occupy unnecessary, but a power supply cord for supplying a commercial power will not be an obstacle either, leading to an advantage enabling effective use of a space on a desk.

[**0110**] In a case where the power transmission apparatus **1** is, as shown in **FIG. 13E**, embedded in a table in an automobile in traveling or, as shown in **FIGS. 13C and 13D**, embedded in a table in a facility at a destination (a shop or a conference room), no necessity arises for an AC adapter and a charger dedicated to equipment to be carried with a

user, and the equipment can be charged anywhere the user wishes, thereby enabling the equipment to be used without worrying about the remaining battery power. Since the power transmission apparatus **1** can charge various types of equipment, the power transmission apparatus **1** can charge any equipment having a battery such as PDAs, digital cameras, camcorders, or the like in a similar manner without specifically limiting the use thereof to a portable telephone and a notebook PC. Note that, in addition to the examples shown in the figures, the power transmission apparatus or apparatuses **1** can be embedded in tables of vehicles such as an airplane and a ship, a learning desk, a desk installed at a place where a wireless LAN communication is possible, and desks provided in hotel rooms in a similar manner.

[**0111**] **FIG. 14** is a view showing an outer appearance of a power supply system of a ninth embodiment of the present invention. A power supply system shown in **FIG. 14** is characterized by that the power transmission apparatuses **1** shown in one of **FIGS. 1A, 2A**, 2B, **3**, **5** to **9**, **10**A, and **10**B are embedded in shelves (utensils) and an example thereof is shown. In **FIG. 14**, a numerical symbol **61** indicates a rack. A numerical symbol **61***a* indicates a plurality of shelves arranged in the rack **61** and having the embedded power transmission apparatuses **1** (not shown). A numerical **61***b* indicates portions **61***a* at the shelves where the power transmission apparatuses **1** (not shown) are embedded. The power transmission apparatuses **1** are embedded in a similar manner to that shown in **FIG. 13B**. Note that, although an AC plug and a cord for feeding a commercial power supply (AC 100 V) to the power transmission apparatuses **1** embedded are not shown, the commercial power supply is fed to the embedded power transmission apparatuses **1** through a power supply cord or the like embedded in the interior of the rack **61** and the shelves **61***a* shown in **FIG. 14**.

[**0112**] In **FIG. 14**, a numerical symbol **2** indicates the portable telephone shown in one of **FIGS. 1A, 2A**, 2B, **3**, **5** to **9**, and **10**B, and a numerical symbol **3** indicates the notebook PC **3** shown in **FIG. 1B**. The power transmission apparatus **1** embedded in the shelf **61***a*, when the portable telephone **2** or the notebook PC **3** is placed at a portion **61***b* where the power transmission apparatus **1** is embedded, detects power necessary for the portable telephone **2** or the notebook PC **3** placed in a manner described above, and adjusts and supplies the power thereto. That is, a single power transmission apparatus **1** can supply power to any of various types of power reception equipment placed on the shelf **61***a* in which said power transmission apparatus **1** is embedded. As described, when the power transmission apparatuses **1** are embedded in shelves **61***a*, space to accommodate AC adapters and chargers become unnecessary. It is also possible to reduce the number of power supply cords because a plurality of power transmission apparatuses **1** can share a common single power supply cord which extends to the rack **61** from an AC socket provided on a wall surface of a room or the like from which a commercial power supply is provided. In a case where no power transmission apparatus **1** is used, all of the space corresponding thereto can be available for storage. Since the power transmission apparatuses **1** are installed in a plurality of shelves **61***a*, the equipment can be easily relocated. Charging can be performed on any types of portable telephones or notebook PCs regardless of their models or makes, and can also be performed on other types of equipment such as digital cameras and portable game machines.

[**0113**] **FIGS. 15A and 15B** are views showing an outer appearance of a power supply system of a tenth embodiment of the present invention. The power supply system shown in **FIGS. 15A and 15B** is characterized by that the power transmission apparatus **1** shown in one of **FIGS. 1A, 2A**, 2B, **3**, **5** to **9**, **10**A, and **10**B is embedded in a bottom plate (utensil) forming a storage compartment. In **FIGS. 15A and 15B**, there is shown an example. In **FIGS. 15A and 15B**, a numerical symbol **71** indicates a locker. A numerical symbol **72** indicates a plurality of storage compartments provided in the locker **71**. **FIG. 15A** shows an entire outer appearance of the locker **71**, and **FIG. 15B** shows one of the storage compartments **72** in an enlarged view. The storage compartment **72** is of a construction in which, as shown in **FIG. 15B**, a door **73** and a lock **74** are provided and, thereby, is lockable. The power transmission apparatus **1** (not shown) is embedded in a bottom plate **72***a* constituting the storage compartment **72**. In **FIG. 15B**, a numerical symbol **72***b* indicates a portion of the bottom plate **72***a* at which the power transmission apparatus **1** is embedded. The power transmission apparatus **1** is embedded in a similar manner to that in **FIG. 13B**. Note that, although an AC plug and a cord for feeding a commercial power supply (AC 100 V) to the embedded power transmission apparatus **1** is not shown, the commercial power supply is fed to the embedded power transmission apparatus **1** through a power supply cord or the like embedded in the interior of the locker **71** and the interior of the bottom plate **72***a*.

[**0114**] In **FIG. 15B**, a numerical symbol **2** is the portable telephone shown in one of **FIGS. 1A, 2A**, 2B, **3**, **5** to **9**, and **10**B. The power transmission apparatus **1** embedded in the bottom plate **72***a*, when the portable telephone **2** is placed at the portion **72***b* where the power transmission apparatus **1** is embedded, as described above, detects power necessary for the portable telephone **2** placed thereon to thereby adjust and supply the power. That is, a single power transmission apparatus **1** can supply power to any of various types of power reception equipment placed on the bottom plates **72***a* in which the power transmission apparatus **1** is embedded. Since the storage compartment **72** can be locked, no necessity arises for a user to wait in a public area even when the portable telephone **2** placed in the storage compartment **72** is charged there, which is convenient. Furthermore, there is also another advantage of less chance of the power transmission apparatus **1** being stolen or broken even in a public area. Charging can be performed on any type of portable telephone **2** regardless of model and make, and can also be performed on other types of equipment such as notebook PCs, digital cameras, and portable game machines.

[**0115**] **FIG. 16** is a view showing an outer appearance of a power supply system of an eleventh embodiment of the present invention. The power supply system shown in **FIG. 16** is characterized by that the power transmission apparatus **1** shown in one of **FIGS. 1A, 2A**, 2B, **3**, **5** to **9**, **10**A, and **10**B is embedded in a wall of a room or the like. In **FIG. 16**, there is shown an example. In **FIG. 16**, an alphanumeric symbol **81***a* indicates a wall, and an alphanumeric symbol **81***b* indicates a portion on the wall where a power transmission apparatus **1** (not shown) is embedded. The power transmission apparatus **1** (not shown) is embedded in a similar manner to that shown in **FIG. 13B**. A structure (not shown) for hooking the equipment is provided at a portion **81***b* where the power transmission apparatus **1** is embedded, and the portable telephone **2** shown in one of **FIGS. 1A, 2A**, 2B,

3, **5** to **9**, and **10**B is hooked there. Note that, although an AC plug and a cord for feeding a commercial power supply (AC 100V) to the embedded power transmission apparatus **1** are not shown, the commercial power supply is fed to the embedded power transmission apparatus **1** through a power supply cord or the like embedded inside the wall **81***a*.

[**0116**] Charging can be started when the portable telephone **2** is, as shown in **FIG. 16**, hooked at the portion **81***b* where the power supply apparatus **1** is embedded. At that time, the power transmission apparatus **1** embedded in the wall **81***a*, as described above, detects power necessary for the portable telephone **2** hooked at the portion **81***b* where the power transmission apparatus **1** is embedded to adjust and supply the power. That is, a single power transmission apparatus **1** can supply power to any of various types of power reception equipment hooked at the wall where the power transmission apparatus **1** is embedded. Since the power transmission apparatus **1** is embedded in the wall, neither a cord to be routed on the surface thereof nor space on the floor for placing the portable telephone **2** is required. Note that, in the embodiment, although the power transmission apparatus **1** is embedded in the wall **81***a*, the power transmission apparatus **1** can be embedded in a side surface of furniture and utensils such as a refrigerator, a cabinet, and a shelf, in which cases, a similar effect can be obtained. Charging can be performed on any types of portable telephone **2** regardless of their models and makes, and can also be performed on other types of equipment such as notebook PCs, digital cameras, and portable game machines.

[**0117**] **FIG. 17** is a view showing an outer appearance of a power supply system of a twelfth embodiment of the present invention. The power supply system shown in **FIG. 17** is characterized by that the power transmission apparatus **1** shown in one of **FIGS. 1A, 2A**, 2B, **3**, **5** to **9**, **10**A, and **10**B is embedded in a holder (utensil). In **FIG. 17**, there is shown an example. In **FIG. 17**, a numerical symbol **91** indicates a holder for holding the portable telephone **2** shown in one of **FIGS. 1A, 2A**, 2B, **3**, **5** to **9**, and **10**B, and the holder is fixed to the rear side of a seat of train. The power transmission apparatus **1** is embedded in the holder **91** in a similar manner to that shown in **FIG. 13B**. Note that, although an AC plug and a cord for feeding a commercial power supply (AC 100 V) to the embedded power supply apparatus **1** are not shown, the commercial power supply is fed to the embedded power transmission apparatus **1** through a power supply cord or the like embedded inside the holder **91**.

[**0118**] When a portable telephone **2** is, as shown in **FIG. 17**, held by the holder **91**, charging starts. The power transmission apparatus **1** embedded in the holder **91**, as described above, detects power necessary for the portable telephone **2** so as to adjust and supply the power. That is, a single power transmission apparatus **1** can supply power to any of various types of power reception equipment held by the holder **91** in which the power transmission apparatus **1** is embedded. Since the power transmission apparatus **1** is of a holder type, a positional deviation is hard to occur during traveling so as to enable stable charging. By using and charging the portable telephone **2** alternately, there arises an advantage that the portable telephone **2** can be used for longer time without paying attention to the remaining battery power even in a train in running. Since the power transmission apparatus **1** is embedded, a chance of the power transmission apparatus **1** being taken away even from a public site without permission becomes smaller. Charging can be performed on any types of portable telephone **2** regardless of their models and makes, and can also be performed on other types of equipment such as notebook PCs, digital cameras, and portable game machines.

[**0119**] **FIG. 18** is a view showing an outer appearance of a power supply system of a thirteenth embodiment of the present invention. The power supply system shown in **FIG. 18** is characterized by that the power transmission apparatus **1** shown in one of **FIGS. 1A, 2A**, 2B, **3**, **5** to **9**, **10**A, and **10**B is embedded in a dashboard (utensil) of an automobile. In **FIG. 18**, there is shown an example. Note that, the embedded power transmission apparatus **1** not only operates by obtaining power supply through a power supply cord provided in the interior of the dashboard or the like from a battery of the automobile, but power from the battery is also supplied to power reception equipment. In **FIG. 18**, an alphanumeric symbol **92***a* indicates a dashboard, and an alphanumeric symbol **92***b* indicates a portion of the dashboard **92***a* where the power transmission apparatus **1** (not shown) is embedded. The power transmission apparatus **1** is embedded in a similar manner to that shown in **FIG. 13B**.

[**0120**] In **FIG. 18**, a numerical symbol **2** indicates the portable telephone shown in one of **FIGS. 1A, 2A**, 2B, **3**, **5** to **9**, and **10**B. The power transmission apparatus **1** embedded in the dashboard **92***a*, when the portable telephone **2** is placed on the portion **92***b* where the power transmission apparatus **1** is embedded, as described above, detects power necessary for the portable telephone **2** placed thereon to adjust and supply the power. That is, a single power transmission apparatus **1** can supply power to any of various types of power reception equipment placed on the dashboard **92***a* where the power transmission apparatus **1** is embedded. Since the power transmission apparatus **1** is embedded in the dashboard **92***a*, there is nothing to block a view field of a driver in the absence of a charging adapter or a cord, which would otherwise block the view, thereby contributing to safety in driving. By using and charging the portable telephone **2** alternately, there arises an advantage that the portable telephone **2** can be used longer time without paying attention to the remaining battery power even in an automobile during running. Charging can be performed on any types of portable telephone **2** regardless of their models and makes, and can also be performed on other types of equipment such as notebook PCs, digital cameras, and portable game machines. Even in a case where the power transmission apparatus **1** is embedded in a console box **93** (utensil) of an automobile shown in **FIG. 18**, a similar effect can be attained.

[**0121**] **FIG. 19** is a view showing an outer appearance of a power supply system of a fourteenth embodiment of the present invention. The power supply system shown in **FIG. 19** is characterized by that the power transmission apparatus **1** shown in one of **FIGS. 1A, 2A**, 2B, **3**, **5** to **9**, **10**A, and **10**B is embedded in a top mat (utensil). In **FIG. 19**, there is shown an example. In **FIG. 19**, a numerical symbol **94** indicates a desk and a numerical symbol **95***a* indicates a top mat, made of resin or glass in which a power transmission apparatus **1** is embedded, placed on the desk **94**. A numerical symbol **95***b* indicates a portion of the top mat **95***a* where the power transmission apparatus **1** is embedded. The power transmission apparatus **1** is embedded in a similar manner to that shown in **FIG. 13B**. Note that, although an AC plug and

a cord for feeding a commercial power supply (AC 100 V) to the embedded power transmission apparatus **1** are not shown, the commercial power supply is fed to the embedded power transmission apparatus **1** through a power supply cord or the like embedded in the top mat **95***a*.

[**0122**] In **FIG. 19**, a numerical symbol **2** indicates the portable telephone shown in one of **FIGS. 1A, 2A**, 2B, **3**, **5** to **9**, and **10**B. The power transmission apparatus **1** embedded in the top mat **95***a*, when the portable telephone **2** is placed at the portion **95***b* where the power transmission apparatus **1** is embedded, as described above, detects power necessary for the portable telephone placed to adjust and supply the power. That is, a single power transmission apparatus **1** can supply power to any of various types of power reception equipment placed on the top mat **95***a* in which the power transmission apparatus **1** is embedded. Since the power transmission apparatus **1** is embedded in the top mat **95***a*, the entire top mat **95***a* can be used when no charging is performed. Note that, in the embodiment, although the power transmission apparatus **1** is embedded in the top mat **95***a* placed on the desk **94**, the power transmission apparatus **1** can be embedded in a top mat placed on a dining table (table top mat), a closet, a piano, or the like, or other pieces of furniture or utensils in a similar manner, in which cases a similar effect can be attained. Charging can be performed on any types of portable telephone regardless of their models and makes, and can be also performed on other types of equipment such as notebook PCs, digital cameras, and portable game machines.

[**0123**] **FIG. 20** is a view showing an outer appearance of a power supply system of a fifteenth embodiment of the present invention. The power supply system shown in **FIG. 20** is characterized that the power transmission apparatus **1** shown in one of **FIGS. 1A, 2A**, 2B, **3**, **5** to **9**, **10**A, and **10**B is embedded in a floor. In **FIG. 20**, there is shown an example. In **FIG. 20**, a numerical symbol **96** indicates a floor and a numerical symbol **97** indicates a portion of the floor **96** where the power transmission apparatus **1** (not shown) is embedded. A plurality of power transmission apparatuses **1** are embedded in a similar manner to that shown in **FIG. 13B**. Note that, although an AC plug and a cord for feeding a commercial power supply (AC 100 V) to the embedded power transmission apparatuses **1** are not shown, the commercial power supply is fed to the power transmission apparatuses **1** through a power supply cord or the like embedded in the floor **96**.

[**0124**] A numerical symbol **98** indicates a cleaning robot that cleans the floor. The cleaning robot **98** is power reception equipment having a power adjusting section corresponding to the power transmission apparatus **1** as in the case of the portable telephone **2** shown in one of **FIGS. 1A, 2A**, 2B, **3**, **5** to **9**, and **10**B. The power transmission apparatus **1**, when the cleaning robot **98** moves onto the portion **97** where the power transmission apparatus **1** is embedded, as described above, detects power necessary for the cleaning robot **98** so as to adjust and supply the power. Since, in this way, the cleaning robot **98** can be charged while it is in motion, the cleaning robot **98** can continue to run for a long time. Since the power transmission apparatuses **1** are embedded in the floor **96**, no surface irregularity occurs on the floor **96** so that the cleaning robot **98** can move smoothly. Charging can be performed on any types of cleaning robot **98** regardless of their models and makes, and can be also performed on other types of equipment such as notebook PCs, digital cameras, and portable game machines. Although, in the embodiment, the power transmission apparatuses **1** are embedded in the floor **96**, the power transmission apparatuses **1** can be embedded in floor covering fabrics, such as a rug, a carpet, or a tatami mat, in which cases a similar effect can be attained.

[**0125**] **FIG. 21** is a block diagram showing an electric configuration of a power supply system of a sixteenth embodiment of the present invention. For convenience's sake in the description, the same constituents as in the power supply system shown in **FIG. 3** are attached with the same symbols. In **FIG. 21**, a numerical symbol **1** indicates a power transmission apparatus. The power transmission apparatuses **1** are embedded in the top plates (not shown) of a plurality of tables provided in a shop such as an eating house. A numerical symbol **2** indicates a portable telephone which is power reception equipment and placed on the top plate of the table in which the power transmission apparatus **1** is embedded.

[**0126**] The power transmission apparatus **1** is fed with a commercial power supply (AC 100 V) from a socket or the like provided on a wall surface of the shop, and the AC 100 V thus supplied is fed to a primary side circuit **10**. The AC 100 V is rectified and smoothed by a power supply circuit **17** in the primary side circuit **10** and once converted to a DC voltage. The DC voltage is subjected to switching by a power supply control circuit (power adjusting section) **18** and converted into a pulse voltage. The pulse voltage is supplied to the primary side coil **11**, and thereby, power is supplied to the portable telephone **2** by the non-contact transmission method through a secondary side circuit **13** provided therein. Charging is performed on the portable telephone **2** with the help of a secondary side circuit **13** and a charge control circuit **14**.

[**0127**] Furthermore, by the non-contact transmission method, not only power but also various information signals are transmitted or received between the power transmission apparatus **1** and the portable telephone **2**. The power transmission apparatus **1** recognizes power of the portable telephone **2** based on the information signal transmitted from the portable telephone **2** placed on the power transmission apparatus **1** and has a function of supplying power necessary for the portable telephone **2**. Therefore, a single power transmission apparatus **1** can charge, without specifically limiting to the portable telephone **2**, any types of other electronic equipment having different power requirements for charging.

[**0128**] The power transmission apparatus **1** is, as shown in **FIG. 21**, connected to a server (external apparatus) **5** of a shop through a network **6** provided therein, and guest order information or the like is transmitted to the server **5** from POS terminals **4** carried by shop persons. Note that the network **6** may be formed by wireless. When a payment processing request button **20** of the power transmission apparatus **1** is pushed down, a payment information signal used in a process of paying for eating and drinking charges incurred by a guest in the shop at a table in which a power transmission apparatus **1** having the payment processing request button which is pushed by the guest is embedded, prices of goods purchased in a store by a guest, and/or for charges of service received from a shop by a guest is

transmitted or received between the server **5** and the portable telephone **2** through the power transmission apparatus **1** by means of a signal transmission control circuit **19** of the power transmission apparatus **1**. The payment can be performed by a mobile banking function of the portable telephone **2** based on the payment information signal transmitted or received between the server **5** and the portable telephone **2**.

[**0129**] **FIG. 22** is a block diagram showing an electric configuration of the power transmission apparatus and the power reception equipment shown in **FIG. 21**. For convenience's sake in the description, the same constituents as in the power supply system shown in **FIG. 3** are attached with the same symbols. In **FIG. 22**, a commercial power supply (AC 100 V) is externally fed to the power transmission apparatus **1** through a cord **1***b* from an AC plug **1***a*. The supplied AC 100 V is full-wave rectified in a rectification circuit **21** in a primary side circuit **10**, thereafter, smoothed by a smoothing circuit constituted of a coil L**1** and a capacitor C**1**, and converted to a DC voltage. The DC voltage is subjected to switching by a switching circuit **22** to obtain a pulse voltage, and the pulse voltage is supplied to a primary side coil **11** through transistors TR**11**, TR**12**, and TR**13**. Note that the rectification circuit **21**, the coil L**1**, the capacitor C**1**, and the switching circuit **22** correspond to the power supply circuit **17** shown in **FIG. 21**.

[**0130**] All of the transistors TR**11**, TRI**2**, and TR**13** are NPN-type transistors. Collectors of all of the transistors are connected to an output terminal of the switching circuit **22**. An emitter of the transistor TR**11** is connected to one end of the primary side coil **11**, and other end of the primary side coil is grounded. The primary side coil **11** has taps a, b, and c thereon in the descending order of a distance from the grounded coil end, i.e., the number of turns. An emitter of the transistor TR**12** is connected to the tap a. An emitter of the transistor TR**13** is connected to tap b. The tap c is connected to a first demodulation circuit **36***a*, a carrier wave oscillation circuit **37**, and a first modulation circuit **38***a* in a power transmission control IC **24** which adjusts the level of power to be transmitted from the power transmission apparatus **1**, and transmits and receives the information signal. Note that the first demodulation circuit **36***a*, the carrier wave oscillation circuit **37**, and the first modulation circuit **38***b* correspond to the signal transmission control circuit **19** shown in **FIG. 1**.

[**0131**] Bases of the transistors TR**11**, TR**12**, and TR**13** are connected to a power change-over circuit **32** in the power transmission control IC **24**. The power transmission control IC **24** is an IC constituted of an LED display circuit **31**, the power change-over circuit **32**, a power transmission enable/disable determination circuit **33**, a power amount determination circuit **54**, a full-charge determination circuit **35**, the first demodulation circuit **36***a*, the carrier wave oscillation circuit **37**, and the first modulation circuit **38***a*, and assumes the shape of an IC chip so that a compact and lower-profile shape is achieved. Description will be given of functions and operations of each of the circuits later. Note that the LED display circuit **31**, the power change-over circuit **32**, the power transmission enable/disable determination circuit **33**, the power amount determination circuit **34**, the full-charge determination circuit **35**, and the transistors TR**11**, TR**12**, and TR**13** correspond to the power supply control circuit **18** shown in **FIG. 21**. The transistors TR**11**, TR**12**, and TR**13** may be other switching elements such as MOSFETs, selector switches, or the like.

[**0132**] The pulse voltage obtained by switching in the switching circuit **22** is supplied to a transformer **23** as well, converted to a predetermined voltage by the transformer **23**, thereafter rectified by a rectification circuit **25**, smoothed by a smoothing circuit consisted of a coil L**2** and a capacitor C**2**, and converted to a DC voltage. The DC voltage is supplied to control circuits in the primary side circuit **10** as a control power supply Vcc in the primary side circuit **10**.

[**0133**] The collectors of NPN-type transistors TR**1**, TR**2**, and TR**3** are connected to the power supply Vcc; the emitter of the transistor TR**1** is connected to an anode of an LED**1** through a current limiting resistor R**1**; and a cathode of the LED**1** is grounded. On the other hand, the emitter of the transistor TR**2** is connected to an anode of an LED**2** through a current limiting resistor **2**, and a cathode of the LED**2** is grounded. The bases of the transistors TR**1** and TR**2** are connected to the LED display circuit **31** in the power transmission circuit IC **24**.

[**0134**] By this configuration, when the LED display circuit **31** turns on the transistor TR**1**, the LED**1** emits light; and when the LED display circuit **31** turns on the transistor TR**2**, the LED**2** emits light. The LED**1** has a function of emitting light in red, yellow, green, purple, or orange according to a signal from the LED display circuit **31**, and the LED**2** has a function of emitting light in red or green in a similar manner by the action of an unillustrated light control circuit. Note that the transistors TR**1** and TR**2** may be other switching elements such as MOSFETs.

[**0135**] Next, description will be given of the portable telephone **2** side. A smoothing capacitor C**4** and a rectification circuit **41** are connected to both ends of a secondary side coil **12**. An induced voltage across the secondary side coil **12** is rectified by the rectification circuit **41**, thereafter smoothed by a smoothing circuit constituted of a coil **3** and a capacitor **3**, and converted into a DC voltage. The DC voltage is supplied to a power-on reset circuit **44**, a voltage clamp circuit **46**, and a regulator circuit **47** in a power receiving control IC **42** that performs power receiving control in a secondary side circuit **13**.

[**0136**] The power-on reset circuit **44** detects a DC voltage obtained by converting a carrier wave transmitted from a primary side circuit **10** described later, thereby determines that a request for an information signal has been made from the power transmission apparatus **1**, resets the power receiving control IC **42**, and starts a transmission of the information signal. The voltage clamp circuit **46** clamps the DC voltage obtained by the conversion at a predetermined voltage and thereby prevents the circuits from being subjected to voltage breakdown. The regulator **47** converts the DC voltage obtained by the conversion to a predetermined voltage used for charging, and supplies the predetermined voltage to a charge control circuit **14**. The power receiving control IC **42** further including a clock extraction circuit **43**, a second demodulation circuit **45***a*, and a second demodulation circuit **48***a*, all of which are connected to the secondary side coil **12**, performs signal processing for the information signal transmitted or received through the primary side coil **11** and the secondary side coil **12**. Note that the power receiving control IC **42** assumes the shape of an IC chip so that a compact and lower-profile shape is achieved.

[0137] Since power supply operations by means of the non-contact transmission from the power transmission apparatus **1** to the portable telephone **2**, both of which are configured as described, are similar to those from the power transmission apparatus **1** to the portable telephone **2** shown in **FIG. 3** that has been described with reference to **FIG. 4**, description thereof is omitted. In the power supply operations from the power transmission apparatus **1** to the portable telephone **2** shown in **FIG. 22**, the operations performed by the demodulation circuit **36** and the modulation circuit **45** shown in **FIG. 3** are performed by the first demodulation circuit **36***a* and the second modulation circuit **45***a* shown in **FIG. 22**.

[0138] Transmitted or received between the power transmission apparatus **1** and the portable telephone **2** having such a configuration are an information signal on power ("code indicating being power reception equipment", "information on consumed power" and "information on full charge") related to power of the portable telephone **2** for the power supply operations and, in addition, a payment information signal related to payment and transmitted between the power transmission apparatus **1** and the server **5**. Description will be given of transmission/receiving operations for the payment information signal in the power supply system shown in **FIG. 22** below.

[0139] When the payment information signal is, at first, transmitted to the first modulation circuit **38***a* from the server **5** through a network **6** provided in a shop, the first modulation circuit **38***a* modulates a carrier wave fed from the carrier wave oscillation circuit **37** with the payment information signal and transmits the modulated wave through the primary side coil **11**. The modulated wave having been modulated with the payment information signal and fed from the first modulation circuit **38***a* is transmitted to the secondary side coil **12** by means of the non-contact transmission and demodulated in the second demodulation circuit **48***a*.

[0140] The payment information signal required for processing payment is also transmitted back from the portable telephone **2** in response to the payment information signal demodulated in the second demodulation circuit **48***a*, or in response to an operation on the portable telephone **2** or the like. The payment information signal to be transmitted from the portable telephone **2** is modulated in the second modulation circuit **45***a* and transmitted through the secondary side coil **12** in a similar manner to that in transmission of the information signal or power described above. The modulated wave modulated with the payment information signal and fed from the second modulation circuit **45***a* is transmitted to the primary side coil **11** by means of the non-contact transmission and demodulated in the first demodulation circuit **36**. Thereafter, the demodulated signal is transmitted to the server **5** through the network **6** established in the shop.

[0141] In this way, the payment information signal can be transmitted or received between the server **5** and the portable telephone **2** through the power transmission apparatus **1**. Therefore, the payment information signal required for processing payment for charges of eating and drinking incurred in the shop, charges of goods purchased in the store, and/or charges of service received from a shop, is transmitted or received between the server **5** and the portable telephone **2**, thereby enabling payment using a mobile banking function of the portable telephone **2** to be performed. Next, description will be given of an example of the payment performed using such a function.

[0142] **FIG. 23** is a flowchart showing the payment procedure using the power supply system shown in **FIG. 21**. The flowchart shown in **FIG. 23** shows a payment procedure in an eating house such as a coffee shop, a restaurant, a fast food shop, or the like. At first, a shop person transmits the contents of an oral order placed by a guest to the server **5** of a shop from a POS terminal **4** (step S**51**). The contents of the order of the guest transmitted from the POS terminal **4** reach the server **5** of the shop (step S**52**). Then, the server **5** transmits the order information (payment information signal) based on the contents of the reached order of the guest to the power transmission apparatus **1** embedded in the corresponding table through the network **6** established in the shop (step S**53**). Thus, the order information reaches the power transmission apparatus **1** (step S**54**). The power transmission apparatus **1** transmits the order information to the portable telephone **2** through transmission/receiving operations for the payment information signal, and the order information reaches the portable telephone **2** (step S**55**). Then, payment is performed through the mobile banking function using the portable telephone **2** (step S**56**).

[0143] Next, description will be given of the mobile banking procedure using the portable telephone **2** with the reference to **FIG. 24**. **FIG. 24** is a flowchart showing a procedure of mobile banking using the power supply system shown in **FIG. 21**. The mobile banking using the portable telephone **2** enables payment in a way such that when a payment processing request button **20** provided on the power transmission apparatus **1** shown in **FIG. 21** is pushed down, the following message is displayed on a screen of the portable telephone **2**. Inputting is done following the message to thereby enable the payment to be completed. First, the payment processing request button **20** is pushed down (step S**61**), then a message "Is payment performed [Y/N]?" is displayed in order to request confirmation on whether or not payment will be performed (step S**62**). In this situation, if [N] meaning "No" is selected, the mobile banking using the portable telephone **2** is terminated, and the payment will be transacted in cash or the like at a cashier.

[0144] On the other hand, if [Y] meaning "Yes" is selected, a message, "The price for drinking and eating today is ¥**650**. Do you select an electronic payment [Y/N]?" is displayed (step S**63**). In this situation, if [N] meaning "No" is selected, the mobile banking using the portable telephone **2** is terminated and payment will be transacted in cash or the like at a cashier. On the other hand, if [Y] meaning "Yes" is selected, payment in the mobile banking is performed and a message, "Payment has been completed" is displayed (step S**64**). In addition, in order to prove the completion of the payment with mobile banking, a message, "Please show this screen image to a shop person when leaving this shop. [Paid on DD day of MM month]" is displayed (step S**65**). The guest can leave the shop by simply showing the message to a shop person. That is, since the guest can perform payment processing at his or her own table, there will be no possibility of many guests paying at a time at a busy casher and being kept waiting. Moreover, since no necessity arises for a shop person to standby at the cashier, both the guests and the shop are benefited.

[0145] While, in the embodiment, description is given of the payment at a shop such as an eating house, the power supply system shown in **FIG. 21** can also be used in payment for a room charge of accommodations such as a hotel or an inn. For example, the power transmission apparatus **1** is embedded in utensils, such as a top plate of a table in a room of the accommodation, a top or a side of a refrigerator, or the like, and when the portable telephone **2** is placed on a predetermined portion of the utensils in which the power transmission apparatus **1** is embedded, charging of the portable telephone **2** starts. The server **5** of the accommodation and the power transmission apparatus **1** in each room are connected through the network **6**, and thereby information on the room charge and the number of guests is transmitted from the server **5** to the power transmission apparatus **1**.

[0146] The cost of food and drink supplied in a refrigerator and consumed by a guest in a room, when the refrigerator and the server **5** are connected to each other, can be transmitted to the power transmission apparatus **1** of the room through the server **5**. When the guest checks out the hotel, the guest places the portable telephone **2** on a utensil at a portion thereof where the power transmission apparatus **1** is embedded and pushes down the payment processing request button **20**, thereby enabling payment therefor to be performed in a similar manner to that in the shop. This method has the advantage that, since the guests can perform payment in their own respective rooms, the front desk will not be crowded with check-out guests and it is unnecessary for the hotel employees to stand by for facilitating smooth check-out at the front desk.

[0147] **FIG. 25** is a flowchart showing another payment procedure using the power supply system shown in **FIG. 21**. The flowchart shown in **FIG. 25** shows a payment procedure for a railway fare or the like. In this case, the power transmission apparatus **1** in **FIG. 21** is embedded in an automatic ticket examining machine installed at a (dedicated) ticket gate. The power transmission apparatus **1** is connected to a server **5** of a station through a network **6**.

[0148] First, when a portable telephone **2** is placed at a predetermined portion of the automatic ticket examining machine in which the power transmission apparatus **1** is embedded, rapid charging of the portable telephone **2** starts (step S**71**). Then, not only is departing station information recorded in the portable telephone **2**, but personal information (ID information of the portable telephone **2**) and the departing station information are recorded in a computer of a railway company connected to the server **5** of the station (step S**72**). Then, a user carrying the portable telephone **2** takes a train to travel (step S**73**).

[0149] Next, the user who has reached the arrival station at the destination places the portable telephone **2** on a power transmission apparatus **1** embedded in an automatic ticket examining machine installed at ticket gate of the arrival station (step S**74**). Then, the fare is paid by means of the mobile banking according to the departing station information and the personal information (equipment ID of the portable telephone **2**) recorded in the portable telephone **2**. Here, the departing station information and the personal information recorded in the computer of the railway company are also accessed through a server **5** of the arrival station (step S**75**). In this way, the user is relieved from troublesome work that includes finding a fare to the destination and buying a ticket. This method has the advantage that, since no cash is paid, the user does not need to have cash in hand, or the user can use the railway service even in case the user happens to have no cash in hand. Furthermore, the user does not need to carry a plurality of prepaid cards of different railway companies, which the user should otherwise carry.

[0150] **FIG. 26** is a flowchart showing still another payment procedure using the power supply system shown in **FIG. 21**. The flowchart shown in **FIG. 26** shows a payment procedure for paying for a ticket or the like. In this example, it is assumed, by referring to **FIG. 21**, that the power transmission apparatus **1** is embedded in a ticket dispenser installed at a ticket vending corner in the station. The ticket dispenser is connected to the server **5** of the station, and the power transmission apparatus **1** is connected to the server **5** of the station through the network **6** of the station.

[0151] First, when the portable telephone **2** is placed at a predetermined potion of the ticket dispenser in which the power transmission apparatus **1** is embedded, rapid charging of the portable telephone **2** starts (step S**81**). Then, when a money amount button of the ticket dispenser on which a fare to a destination is displayed is pushed down (step S**82**), personal information (equipment ID of the portable telephone **2**) and ticket purchasing price information are recorded into the computer of the railway company connected to the server **5**, and the purchasing price is paid by means of mobile banking (step S**83**). Then, a ticket is issued from the ticket dispenser (step S**84**). This method has the advantage that decrease in power of the battery of the portable telephone **2** can be prevented because a supplementary battery charge is performed when the ticket is purchased, and the user does not need to have cash in hand or can use the railway service even in case the user happens to have no cash in hand because no cash is paid. Furthermore, the user does not need to carry a plurality of prepaid cards of different railway companies, which the user should otherwise carry.

[0152] Note that while the description has been given by using a portable telephone or a notebook PC as power reception equipment equipped with a power supply system of the embodiments of the present invention as examples, the power supply system related to the present invention can be applied to other electronic equipment without specifically limiting the application thereof to the portable telephone or the notebook PC.

[0153] Although described hereto are the examples in which a power transmission apparatus or apparatuses are embedded in the top plate of a desk, the shelves of a rack, the bottom plates of a lockable locker, the holder for holding a power reception equipment, the dashboard and/or the console box of an automobile, the top mat, the floor, the floor covering fabrics, and the wall, the power transmission apparatus or apparatuses may be embedded in other utensils, other structural members, and the like.

[0154] It is to be understood that the present invention is not limited to the embodiments as described above and that within the scope of the appended claims, the invention may be practiced other than as specifically described.

[0155] Since the power transmission apparatus of the power supply system related to the present invention can select from among three levels of power to be transmitted, large, medium, and small according to power required by the power reception equipment and transmit the selected power thereto, a single power transmission apparatus can supply power to different types of electronic equipment.

[0156] Since a protrusion or a mark is provided on the power transmission apparatus and a depression or another mark is provided on the power reception equipment, even when different types of power reception equipment are used, it is possible to position the power reception equipment at the location for optimum power reception.

[0157] Since LEDs indicating operating states are provided on the power transmission apparatus, the user can easily recognize the operating states of the power transmission apparatus.

[0158] Since a pair of power transmission electrodes for supplying power to the power transmission apparatus in a contact manner, and a current detection circuit monitoring current flowing between the power transmission electrodes of the pair, and a power route change-over circuit are added to the configuration, power can be also supplied to the conventional power reception equipment that performs charging by receiving power through power receiving electrodes of contact type.

[0159] Since the power transmission apparatus is embedded in the top plate of a desk, the shelves of a rack, the bottom plates of a lockable locker, the holder for holding a power reception equipment, the dashboard and/or the console box of an automobile, the top mat, the wall, the side surface of a utensil, the floor, and the floor covering fabric, space saving can be realized.

[0160] An information signal can be transmitted or received between a portable telephone and a server connected to the power transmission apparatus. Therefore, charges can be paid for by using the mobile banking function of the portable telephone in a place where there are provided a utensil or utensils having the power transmission apparatus or apparatuses embedded therein, thereby making it unnecessary to pay at a cashier of an eating house or a front desk of a hotel.

[0161] In a railway station, paying the fare by using the mobile banking function of the portable telephone makes it possible to buy a ticket without inputting money into a ticket dispenser. Furthermore, in a case where the power transmission apparatus is embedded in an automatic ticket examining machine, paying the fare is carried out by means of the portable telephone. Consequently, the user can use transportation service provided by different railway companies without actually buying tickets and without carrying a plurality of prepaid cards.

[0162] Therefore, according to the present invention, it is possible to realize a power supply system capable of supplying power to different types of electronic equipment from a single power transmission apparatus, thereby achieving space saving, and performing payment for public service and charges.

What is claimed is:

1. A power supply system for supplying power, in a non-contact manner, to power reception equipment from a power transmission apparatus to which a commercial power supply is supplied,

wherein there is provided a power adjusting section for adjusting a level of power to be transmitted according to power required by the power reception equipment.

2. A power supply system comprising:

a primary side coil;

a power transmission apparatus having a primary side circuit for feeding a pulse voltage to the primary side coil, the pulse voltage resulted from switching a DC voltage that is obtained by rectifying and smoothing a commercial power supply;

a secondary side coil magnetically coupled to the primary side coil; and

power reception equipment having a secondary side circuit for rectifying and smoothing an induced voltage induced across the secondary side coil,

wherein there is provided a power adjusting section for adjusting a level of power to be transmitted according to power required by the power reception equipment.

3. The power supply system according to claim 2,

wherein the primary side coil comprises either a coil with a plurality of taps each arranged on the coil at different turns thereof or comprises a plurality of coils each having a different number of turns, and

the power adjusting section has a power change-over section for selecting, according to the power required by the power reception equipment, one from among the plurality of taps to which the pulse voltage is applied or has a power change-over section for selecting, according to the power required by the power reception equipment, one from among the plurality of coils to which the pulse voltage is applied.

4. The power supply system according to claim 3,

wherein the power adjusting section comprises:

a carrier wave oscillation circuit, included in the primary side circuit, for regularly supplying a carrier wave to the primary side coil; and

a demodulation circuit, included in the primary side circuit, for receiving an information signal through the primary side coil and demodulating the received information signal, the information signal including information on the power reception equipment, modulated, and transmitted from the power reception equipment in response to the carrier wave,

wherein the power adjusting section adjusts, in accordance with the information signal demodulated by the demodulation circuit, the level of power to be transmitted through a change-over operation performed by the power change-over section.

5. The power supply system according to claim 4,

wherein the power adjusting section further comprises:

a carrier wave detection circuit, included in the secondary side circuit, for detecting the carrier wave transmitted to the secondary side coil;

a clock extraction circuit, included in the secondary side circuit, for extracting a clock signal necessary for modulation from the carrier wave; and

a modulation circuit, included in the secondary side circuit, for modulating the carrier wave with the information signal based on the clock signal and transmitting the modulated signal through the secondary side coil when the carrier wave detection circuit detects the carrier wave.

6. The power supply system according to claim 4,

wherein a coil to which the pulse voltage is applied, and a coil to which the carrier wave is applied and through which the information signal is received are an identical coil forming the primary side coil.

7. The power supply system according to claim 4,

wherein a coil to which the pulse voltage is applied, and a coil to which the carrier wave is applied and through which the information signal is received are different coils forming the primary side coil.

8. The power supply system according to claim 4,

wherein the power adjusting section has a function of recognizing the information on the power reception equipment based on the information signal demodulated by the demodulation circuit.

9. The power supply system according to claim 4,

wherein the information signal transmitted from the power reception equipment includes a "code indicating being power reception equipment".

10. The power supply system according to claim 4,

wherein power is transmitted to the power reception equipment based on the "code indicating being power reception equipment" included in the information signal when equipment that can receive power is placed on the power transmission apparatus.

11. The power supply system according to claim 4, further comprising,

a power transmission enable/disable determination circuit for determining, based on the "code indicating being power reception equipment" included in the information signal, whether or not equipment that can receive power is placed on the power transmission apparatus.

12. The power supply system according to claim 11,

wherein, by determining that equipment that can receive power is placed on the power transmission apparatus, the power transmission enable/disable determination circuit controls the power change-over section so that the pulse voltage is applied to the primary side coil, if the "code indicating being power reception equipment" included in the information signal is a predetermined "code indicating being power reception equipment", and

by determining that equipment that can receive power is not placed on the power transmission apparatus, the power transmission enable/disable determination circuit controls the power change-over section so that the pulse voltage is not applied to the primary side coil, if the "code indicating being power reception equipment" included in the information signal is not the predetermined "code indicating being power reception equipment".

13. The power supply system according to claim 4, further comprising,

a power amount determination circuit,

wherein the information signal includes "information on consumed power", and the power amount determination circuit determines the level of power to be transmitted based on the "information on consumed power" included in the information signal.

14. The power supply system according to claim 13,

wherein the power amount determination circuit controls the power change-over section according to the determined level of power to be transmitted.

15. The power supply system according to claim 4,

wherein the information signal includes "information on full charge", if the power reception equipment has a battery that is charged with power transmitted from the power transmission apparatus.

16. The power supply system according to claim 4,

wherein, when the power reception equipment is fully charged, power transmission is stopped based on the "information on full charge" included in the information signal.

17. The power supply system according to claim 4, further comprising,

a full-charge determination circuit for determining, based on the "information on full charge" included in the information signal, whether or not the power reception equipment is fully charged.

18. The power supply system according to claim 17,

wherein, if the "information on full charge" included in the information signal does not indicate that the power reception equipment is not fully charged, by determining that the power reception equipment is not fully charged, the full-charge determination circuit controls the power change-over section so that the pulse voltage is applied to the primary side coil, and

if the "information on full charge" included in the information signal indicates that the power reception equipment is fully charged, by determining that the power reception equipment is fully charged, the full-charge determination circuit controls the power change-over section so that the pulse voltage is not applied to the primary side coil.

19. The power supply system according to claim 3,

wherein the power adjusting section comprises:

a carrier wave oscillation circuit, included in the primary side circuit, for regularly supplying a carrier wave to the primary side coil; and

a demodulation circuit, included in the primary side circuit, for receiving an information signal through the primary side coil and demodulating the received information signal, the information signal including infor-

mation on the power reception equipment, modulated, and transmitted from the power reception equipment in response to the carrier wave,

wherein, when a relative position between the power transmission apparatus and the power reception equipment changes, a transmission efficiency of the power to be transmitted and a transmission efficiency of the information signal change at substantially an identical rate,

wherein the power adjusting section further comprises a power transmission enable/disable determination circuit for determining, according to the transmission efficiency of the information signal received by the demodulation circuit, whether or not the relative position between the power transmission apparatus and the power reception equipment is suitable for transmitting power.

20. The power supply system according to claim 19,

wherein, when the transmission efficiency of the information signal received by the demodulation circuit is larger than a predetermined value, by determining that the relative position between the power transmission apparatus and the power reception equipment is suitable for transmitting power, the power transmission enable/disable determination circuit controls the power change-over section so that the voltage pulse is applied to the primary side coil, and

when the transmission efficiency of the information signal received by the demodulation circuit is smaller than the predetermined value, by determining that the relative position between the power transmission apparatus and the power reception equipment is not suitable for transmitting power, the power transmission enable/disable determination circuit controls the power change-over section so that the voltage pulse is not applied to the primary side coil.

21. The power supply system according to claim 2,

wherein the primary side circuit includes a current voltage detection circuit for detecting a change in current flowing through the primary side coil and/or a change in voltage appearing across the primary side coil.

22. The power supply system according to claim 21,

wherein, when equipment that can receive power is placed on the power transmission apparatus, power is transmitted to the power reception equipment according to the change in the current and/or the voltage detected by the current voltage detection circuit.

23. The power supply system according to claim 21

wherein the power adjusting section has a function of recognizing information on the power reception equipment according to the change in the current and/or the voltage detected by the current voltage detection circuit.

24. The power supply system according to claim 3,

wherein the primary side circuit includes a current voltage detection circuit for detecting a change in current flowing through the primary side coil and/or a change in voltage appearing across the primary side coil, and

the power change-over section is switched over so as to adjust the level of power to be transmitted according to the change in the current and/or the voltage detected by the current voltage detection circuit.

25. The power supply system according to claim 24, further comprising,

a power transmission enable/disable determination circuit for determining, according to the change in the current and/or the voltage detected by the current voltage detection circuit, whether or not equipment that can receive power is placed on the power transmission apparatus.

26. The power supply system according to claim 25,

wherein, when a predetermined change in the current and/or the voltage is detected by the current voltage detection circuit, by determining that equipment that can receive power is placed on the power transmission apparatus, the power transmission enable/disable determination circuit controls the power change-over section so that the voltage pulse is applied to the primary side coil, and

when the predetermined change in the current and/or the voltage is not detected by the current voltage detection circuit, by determining that equipment that can receive power is not placed on the power transmission apparatus, the power transmission enable/disable determination circuit controls the power change-over section so that the voltage pulse is not applied to the primary side coil.

27. The power supply system according to claim 24, further comprising:

a power amount determination circuit for determining the level of power to be transmitted according to the change in the current and/or the voltage detected by the current voltage detection circuit.

28. The power supply system according to claim 27,

wherein the power amount determination circuit controls the power change-over section according to the determined level of power to be transmitted.

29. The power supply system according to claim 21,

wherein, if the power reception equipment has a battery that is charged with the power transmitted from the power transmission apparatus and if it is determined, according to the change in the current and/or the voltage detected by the current voltage detection circuit, that the power reception equipment is fully charged, the power transmission is stopped.

30. The power supply system according to claim 24, further comprising,

a full-charge determination circuit for determining whether or not the power reception equipment is fully charged according to the change in the current and/or the voltage detected by the current voltage detection circuit, if the power reception equipment has a battery that is charged with power transmitted from the power transmission apparatus.

31. The power supply system according to claim 30,

wherein, when a predetermined change in the current and/or the voltage is detected by the current voltage detection circuit, by determining that the power reception equipment is not fully charged, the full-charge

determination circuit controls the power change-over section so that the voltage pulse is applied to the primary side coil, and

when the predetermined change in the current and/or the voltage is not detected by the current voltage detection circuit, by determining that the power reception equipment is fully charged, the full-charge determination circuit controls the power change-over section so that the voltage pulse is not applied to the primary side coil.

32. The power supply system according to claim 2,

wherein one of a protrusion and a depression is provided on a face of the power transmission apparatus and other of a protrusion and a depression is provided on a face, facing the face of the power transmission apparatus, of the power reception equipment, and

the power transmission apparatus and the power reception equipment are positioned relative to each other by engaging the protrusion with the depression, when power is transmitted from the power transmission apparatus to the power reception equipment.

33. The power supply system according to claim 2,

wherein marks indicating a region through which power can be transmitted are provided respectively on a face of the power transmission apparatus and a face, facing the face of the power transmission apparatus, of the power reception equipment so that the power transmission apparatus and the power reception equipment are positioned relative to each other, when power is transmitted from the power transmission apparatus to the power reception equipment.

34. The power supply system according to claim 2,

wherein a display section for indicating the level of power to be transmitted from the power transmission apparatus is provided thereon.

35. The power supply system according to claim 2,

wherein a display section is provided on the power transmission apparatus so as to indicate that the power reception equipment is fully charged, if the power reception equipment has a battery that is charged with power transmitted from the power transmission apparatus.

36. The power supply system according to claim 2,

wherein a display section is provided on the power transmission apparatus so as to indicate that the power reception equipment is removed from on the power transmission apparatus after power has been once transmitted from the power transmission apparatus to the power reception equipment.

37. The power supply system according to claim 2,

wherein a display section is provided on the power transmission apparatus so as to indicate, when a position of the power reception equipment relative to the power transmission apparatus is not suitable for transmitting power, that the position of the power reception equipment relative to the power transmission apparatus is not suitable for transmitting power.

38. The power supply system according to claim 2,

wherein, the power transmission apparatus comprises:

a pair of power transmission electrodes, brought in contact with a pair of power receiving electrodes, for supplying power thereto, when the power reception equipment is such equipment that receives power through the pair of power receiving electrodes;

an inter-electrode current detection circuit for detecting current flowing between the pair of power transmission electrodes when the pair of power transmission electrodes and the pair of power receiving electrodes of a contact type of the power reception equipment are brought in contact with each other; and

a power route change-over circuit for selecting between a route through which the power to be transmitted is supplied to the pair of power transmission electrodes and a route through which the power to be transmitted is supplied to the primary side coil according to the detecting result by the inter-electrode current detection circuit.

39. The power supply system according to claim 2,

wherein the power transmission apparatus is incorporated in a utensil.

40. The power supply system according to claim 39,

wherein the utensil is a top plate of a desk.

41. The power supply system according to claim 39,

wherein the utensil is a shelf.

42. The power supply system according to claim 39,

wherein the utensil is a bottom plate that forms a lockable storage compartment.

43. The power supply system according to claim 39,

wherein the utensil is a holder for holding the power reception equipment.

44. The power supply system according to claim 39,

wherein the utensil is a dashboard and/or a console box of an automobile.

45. The power supply system according to claim 39,

wherein the utensil is a top mat.

46. The power supply system according to claim 39,

wherein the power transmission apparatus is incorporated in a side surface of the utensil.

47. The power supply system according to claim 2,

the power transmission apparatus is incorporated in a floor, a carpet for covering a floor, or a wall.

48. The power supply system according to claim 2, further comprising,

a signal transmission control circuit for transmitting an information signal among the power transmission apparatus, the power reception equipment, and an external apparatus connected to the power transmission apparatus.

49. The power supply system according to claim 48,

wherein the primary side circuit comprises:

a carrier wave oscillation circuit for regularly supplying a carrier wave to the primary side coil;

a first demodulation circuit for receiving through the primary side coil and demodulating the information signal that is modulated by and transmitted from the power reception equipment, and feeding the demodulated information signal to the power adjusting section and the external apparatus; and

a first modulation circuit for modulating the carrier wave supplied from the carrier wave oscillation circuit with the information signal supplied from the external apparatus, and transmitting the modulated signal through the primary side coil,

wherein the secondary side circuit comprises:

a carrier wave detection circuit for detecting the carrier wave transmitted to the secondary side coil;

a clock extraction circuit for extracting a clock signal required for modulation from the carrier wave; and

a second modulation circuit for modulating the carrier wave with the information signal transmitted from the power reception equipment based on the clock signal and transmitting the modulated signal through the secondary side coil, when the carrier wave detection circuit detects the carrier wave.

50. The power supply system according to claim 48,

wherein power is supplied to the power reception equipment placed in close proximity to the power transmission apparatus,

the information signal, transmitted from the signal transmission control circuit and transmitted between the external apparatus and the power reception equipment through the power transmission apparatus, is a signal necessary for payment, and

a function of performing the payment by utilizing the power reception equipment is provided.

51. The power supply system according to claim 48,

wherein the power transmission apparatus is incorporated in a top plate of a table provided in a shop,

the power transmission apparatus supplies power to the power reception equipment placed on the top plate,

the external apparatus is a server provided in the shop,

the information signal, transmitted from the signal transmission control circuit and transmitted between the server and the power reception equipment through the power transmission apparatus, is a signal required for performing payment for wining and dining in the shop, goods purchased in the shop, and/or service provided by the shop, and

a function of performing the payment by utilizing the power reception equipment is provided.

52. The power supply system according to claim 48,

wherein the power transmission apparatus is incorporated in a utensil provided in lodging facilities,

the power transmission apparatus supplies power to the power reception equipment placed in close proximity to the utensil,

the external apparatus is a server provided in the lodging facilities,

the information signal, transmitted from the signal transmission control circuit and transmitted between the server and the power reception equipment through the power transmission apparatus, is a signal required for performing payment for wining and dining in the lodging facilities, goods purchased in the lodging facilities, and/or service provided by the lodging facilities, and

a function of performing the payment by utilizing the power reception equipment is provided.

53. The power supply system according to claim 48,

wherein the power transmission apparatus is incorporated in a ticket dispenser connected to a server provided at a station,

the power transmission apparatus supplies power to the power reception equipment placed in close proximity to the ticket dispenser,

the external apparatus is the server,

the information signal, transmitted from the signal transmission control circuit and transmitted between the server and the power reception equipment through the power transmission apparatus, is a signal including personal information of a user of the power reception equipment required for performing payment for a ticket purchased through the ticket dispenser, and

a function of performing the payment by utilizing the power reception equipment is provided.

54. The power supply system according to claim 48

wherein the power transmission apparatus is incorporated in an automatic ticket examining machine provided at a ticket gate in a station,

the power transmission apparatus supplies power to the power reception equipment placed in close proximity to the automatic ticket examining machine,

the external apparatus is a server provided at the station,

the information signal, transmitted from the signal transmission control circuit and transmitted between the server and the power reception equipment through the power transmission apparatus, is a signal including information on a departing station and personal information of a user of the power reception equipment required for performing payment of a fare, and

a function of performing the payment by utilizing the power reception equipment is provided.

* * * * *