AN710

Antenna Circuit Design for RFID Applications

Author: Youbok Lee, Ph.D.
Microchip Technology Inc.

INTRODUCTION

Passive RFID tags utilize an induced antenna coil voltage for operation. This induced AC voltage is rectified to provide a voltage source for the device. As the DC voltage reaches a certain level, the device starts operating. By providing an energizing RF signal, a reader can communicate with a remotely located device that has no external power source such as a battery. Since the energizing and communication between the reader and tag is accomplished through antenna coils, it is important that the device must be equipped with a proper antenna circuit for successful RFID applications.

An RF signal can be radiated effectively if the linear dimension of the antenna is comparable with the wavelength of the operating frequency. However, the wavelength at 13.56 MHz is 22.12 meters. Therefore, it is difficult to form a true antenna for most RFID applications. Alternatively, a small loop antenna circuit that is resonating at the frequency is used. A current flowing into the coil radiates a near-field magnetic field that falls off with r^{-3}. This type of antenna is called a *magnetic dipole antenna.*

For 13.56 MHz passive tag applications, a few microhenries of inductance and a few hundred pF of resonant capacitor are typically used. The voltage transfer between the reader and tag coils is accomplished through inductive coupling between the two coils. As in a typical transformer, where a voltage in the primary coil transfers to the secondary coil, the voltage in the reader antenna coil is transferred to the tag antenna coil and vice versa. The efficiency of the voltage transfer can be increased significantly with high Q circuits.

This section is written for RF coil designers and RFID system engineers. It reviews basic electromagnetic theories on antenna coils, a procedure for coil design, calculation and measurement of inductance, an antenna tuning method, and read range in RFID applications.

REVIEW OF A BASIC THEORY FOR RFID ANTENNA DESIGN

Current and Magnetic Fields

Ampere's law states that current flowing in a conductor produces a magnetic field around the conductor. The magnetic field produced by a current element, as shown in Figure 1, on a round conductor (wire) with a finite length is given by:

EQUATION 1:

$$B_\phi = \frac{\mu_o I}{4\pi r}(\cos\alpha_2 - \cos\alpha_1) \qquad (\text{Weber}/m^2)$$

where:

I = current

r = distance from the center of wire

μ_0 = permeability of free space and given as $4\pi \times 10^{-7}$ (Henry/meter)

In a special case with an infinitely long wire where:

α_1 = -180°

α_2 = 0°

Equation 1 can be rewritten as:

EQUATION 2:

$$B_\phi = \frac{\mu_o I}{2\pi r} \qquad (\text{Weber}/m^2)$$

FIGURE 1: CALCULATION OF MAGNETIC FIELD B AT LOCATION P DUE TO CURRENT I ON A STRAIGHT CONDUCTING WIRE

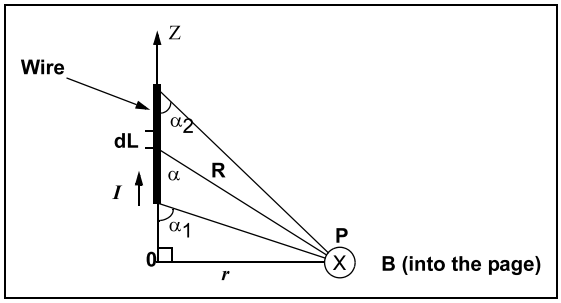

© 2003 Microchip Technology Inc.

SAMSUNG EXHIBIT 1029

The magnetic field produced by a circular loop antenna is given by:

EQUATION 3:

$$B_z = \frac{\mu_o I N a^2}{2(a^2 + r^2)^{3/2}}$$

$$= \frac{\mu_o I N a^2}{2} \left(\frac{1}{r^3}\right) \quad \text{for } r^2 >> a^2$$

where

I = current

a = radius of loop

r = distance from the center of loop

μ_0 = permeability of free space and given as $4\pi \times 10^{-7}$ (Henry/meter)

The above equation indicates that the magnetic field strength decays with $1/r^3$. A graphical demonstration is shown in Figure 3. It has maximum amplitude in the plane of the loop and directly proportional to both the current and the number of turns, N.

Equation 3 is often used to calculate the ampere-turn requirement for read range. A few examples that calculate the ampere-turns and the field intensity necessary to power the tag will be given in the following sections.

FIGURE 2: CALCULATION OF MAGNETIC FIELD B AT LOCATION P DUE TO CURRENT I ON THE LOOP

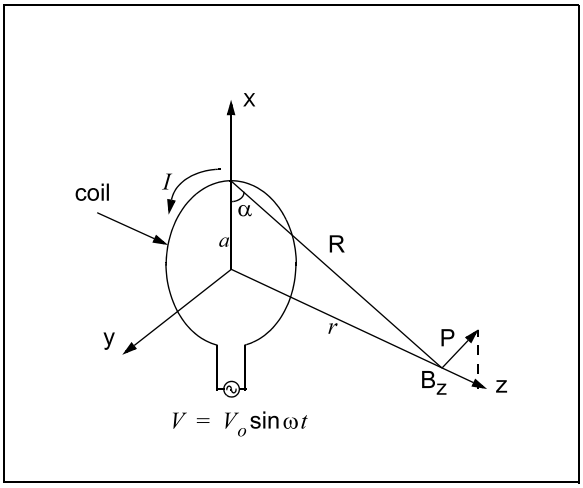

FIGURE 3: DECAYING OF THE MAGNETIC FIELD B VS. DISTANCE *r*

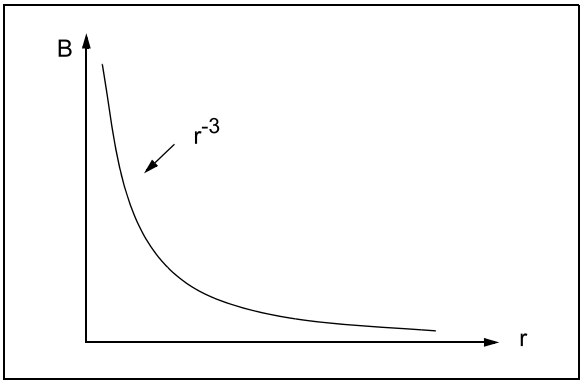

© 2003 Microchip Technology Inc.

INDUCED VOLTAGE IN AN ANTENNA COIL

Faraday's law states that a time-varying magnetic field through a surface bounded by a closed path induces a voltage around the loop.

Figure 4 shows a simple geometry of an RFID application. When the tag and reader antennas are in close proximity, the time-varying magnetic field B that is produced by a reader antenna coil induces a voltage (called electromotive force or simply EMF) in the closed tag antenna coil. The induced voltage in the coil causes a flow of current on the coil. This is called Faraday's law. The induced voltage on the tag antenna coil is equal to the time rate of change of the magnetic flux Ψ.

EQUATION 4:

$$V = -N\frac{d\psi}{dt}$$

where:

N = number of turns in the antenna coil

Ψ = magnetic flux through each turn

The negative sign shows that the induced voltage acts in such a way as to oppose the magnetic flux producing it. This is known as Lenz's law and it emphasizes the fact that the direction of current flow in the circuit is such that the induced magnetic field produced by the induced current will oppose the original magnetic field.

The magnetic flux Ψ in Equation 4 is the total magnetic field B that is passing through the entire surface of the antenna coil, and found by:

EQUATION 5:

$$\psi = \int B \cdot dS$$

where:

B = magnetic field given in Equation 2

S = surface area of the coil

• = inner product (*cosine angle between two vectors*) of vectors B and surface area S

Note: Both magnetic field B and surface S are vector quantities.

The presentation of inner product of two vectors in Equation 5 suggests that the total magnetic flux ψ that is passing through the antenna coil is affected by an orientation of the antenna coils. The inner product of two vectors becomes minimized when the cosine angle between the two are 90 degrees, or the two (B field and the surface of coil) are perpendicular to each other and maximized when the cosine angle is 0 degrees.

The maximum magnetic flux that is passing through the tag coil is obtained when the two coils (reader coil and tag coil) are placed in parallel with respect to each other. This condition results in maximum induced voltage in the tag coil and also maximum read range. The inner product expression in Equation 5 also can be expressed in terms of a mutual coupling between the reader and tag coils. The mutual coupling between the two coils is maximized in the above condition.

FIGURE 4: A BASIC CONFIGURATION OF READER AND TAG ANTENNAS IN RFID APPLICATIONS

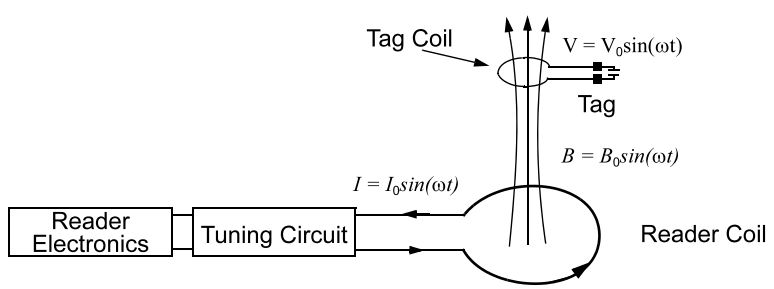

Using Equations 3 and 5, Equation 4 can be rewritten as:

EQUATION 6:

$$V = -N_2 \frac{d\Psi_{21}}{dt} = -N_2 \frac{d}{dt}\left(\int B \cdot dS\right)$$

$$= -N_2 \frac{d}{dt}\left[\int \frac{\mu_o i_1 N_1 a^2}{2(a^2+r^2)^{3/2}} \cdot dS\right]$$

$$= -\left[\frac{\mu_o N_1 N_2 a^2 (\pi b^2)}{2(a^2+r^2)^{3/2}}\right]\frac{di_1}{dt}$$

$$= -M\frac{di_1}{dt}$$

where:

V = voltage in the tag coil
i_1 = current on the reader coil
a = radius of the reader coil
b = radius of tag coil
r = distance between the two coils
M = mutual inductance between the tag and reader coils, and given by:

EQUATION 7:

$$M = \left[\frac{\mu_o \pi N_1 N_2 (ab)^2}{2(a^2+r^2)^{3/2}}\right]$$

The above equation is equivalent to a voltage transformation in typical transformer applications. The current flow in the primary coil produces a magnetic flux that causes a voltage induction at the secondary coil.

As shown in Equation 6, the tag coil voltage is largely dependent on the mutual inductance between the two coils. The mutual inductance is a function of coil geometry and the spacing between them. The induced voltage in the tag coil decreases with r^{-3}. Therefore, the read range also decreases in the same way.

From Equations 4 and 5, a generalized expression for induced voltage V_o in a tuned loop coil is given by:

EQUATION 8:

$$V_0 = 2\pi f N S Q B_o \cos\alpha$$

where:

f = frequency of the arrival signal
N = number of turns of coil in the loop
S = area of the loop in square meters (m^2)
Q = quality factor of circuit
B_o = strength of the arrival signal
α = angle of arrival of the signal

In the above equation, the quality factor Q is a measure of the selectivity of the frequency of the interest. The Q will be defined in Equations 43 through 59.

FIGURE 5: ORIENTATION DEPENDENCY OF THE TAG ANTENNA

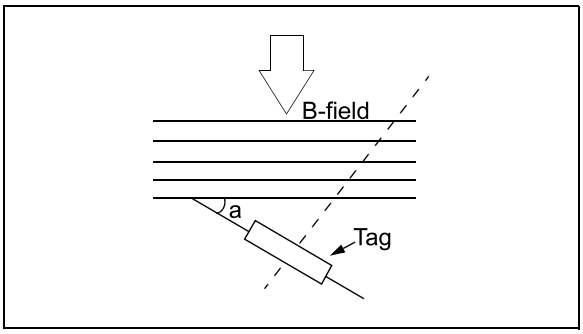

The induced voltage developed across the loop antenna coil is a function of the angle of the arrival signal. The induced voltage is maximized when the antenna coil is placed in parallel with the incoming signal where $\alpha = 0$.

© 2003 Microchip Technology Inc.

EXAMPLE 1: CALCULATION OF B-FIELD IN A TAG COIL

The MCRF355 device turns on when the antenna coil develops 4 VPP across it. This voltage is rectified and the device starts to operate when it reaches 2.4 VDC. The B-field to induce a 4 VPP coil voltage with an ISO standard 7810 card size (85.6 x 54 x 0.76 mm) is calculated from the coil voltage equation using Equation 8.

EQUATION 9:

$$V_o = 2\pi fNSQB_o \cos\alpha = 4$$

and

$$B_o = \frac{4/(\sqrt{2})}{2\pi fNSQ\cos\alpha} = 0.0449 \qquad (\mu wbm^{-2})$$

where the following parameters are used in the above calculation:

Tag coil size	=	(85.6 x 54) mm^2 (ISO card size) = 0.0046224 m^2
Frequency	=	13.56 MHz
Number of turns	=	4
Q of tag antenna coil	=	40
AC coil voltage to turn on the tag	=	4 VPP
$\cos\alpha$	=	1 (normal direction, $\alpha = 0$).

EXAMPLE 2: NUMBER OF TURNS AND CURRENT (AMPERE-TURNS)

Assuming that the reader should provide a read range of 15 inches (38.1 cm) for the tag given in the previous example, the current and number of turns of a reader antenna coil is calculated from Equation 3:

EQUATION 10:

$$(NI)_{rms} = \frac{2B_z(a^2+r^2)^{3/2}}{\mu a^2}$$

$$= \frac{2(0.0449\times10^{-6})(0.1^2+(0.38)^2)^{3/2}}{(4\pi\times10^{-7})(0.1^2)}$$

$$= 0.43(\text{ampere - turns})$$

The above result indicates that it needs a 430 mA for 1 turn coil, and 215 mA for 2-turn coil.

EXAMPLE 3: OPTIMUM COIL DIAMETER OF THE READER COIL

An optimum coil diameter that requires the minimum number of ampere-turns for a particular read range can be found from Equation 3 such as:

EQUATION 11:

$$NI = K\frac{(a^2+r^2)^{\frac{3}{2}}}{a^2}$$

here: $K = \frac{2B_z}{\mu_o}$

By taking derivative with respect to the radius a,

$$\frac{d(NI)}{da} = K\,\frac{3/2(a^2+r^2)^{1/2}(2a^3)-2a(a^2+r^2)^{3/2}}{a^4}$$

$$= K\frac{(a^2-2r^2)(a^2+r^2)^{1/2}}{a^3}$$

The above equation becomes minimized when:

The above result shows a relationship between the read range versus optimum coil diameter. The optimum coil diameter is found as:

EQUATION 12:

$$a = \sqrt{2}r$$

where:

a	=	radius of coil
r	=	read range.

The result indicates that the optimum loop radius, a, is 1.414 times the demanded read range r.

WIRE TYPES AND OHMIC LOSSES

DC Resistance of Conductor and Wire Types

The diameter of electrical wire is expressed as the American Wire Gauge (AWG) number. The gauge number is inversely proportional to diameter, and the diameter is roughly doubled every six wire gauges. The wire with a smaller diameter has a higher DC resistance. The DC resistance for a conductor with a uniform cross-sectional area is found by:

EQUATION 13: DC Resistance of Wire

$$R_{DC} = \frac{l}{\sigma S} = \frac{l}{\sigma \pi a^2} \qquad (\Omega)$$

where:

l = total length of the wire
σ = conductivity of the wire (mho/m)
S = cross-sectional area = πr^2
a = radius of wire

For a The resistance must be kept small as possible for higher Q of antenna circuit. For this reason, a larger diameter coil as possible must be chosen for the RFID circuit. Table 5 shows the diameter for bare and enamel-coated wires, and DC resistance.

AC Resistance of Conductor

At DC, charge carriers are evenly distributed through the entire cross section of a wire. As the frequency increases, the magnetic field is increased at the center of the inductor. Therefore, the reactance near the center of the wire increases. This results in higher impedance to the current density in the region. Therefore, the charge moves away from the center of the wire and towards the edge of the wire. As a result, the current density decreases in the center of the wire and increases near the edge of the wire. This is called a *skin effect*. The depth into the conductor at which the current density falls to 1/e, or 37% (= 0.3679) of its value along the surface, is known as the *skin depth* and is a function of the frequency and the permeability and conductivity of the medium. The net result of skin effect is an effective decrease in the cross sectional area of the conductor. Therefore, a net increase in the AC resistance of the wire. The skin depth is given by:

EQUATION 14:

$$\delta = \frac{1}{\sqrt{\pi f \mu \sigma}}$$

where:

f = frequency
μ = permeability (F/m) = $\mu_o \mu_r$
μ_o = Permeability of air = $4\pi \times 10^{-7}$ (h/m)
μ_r = 1 for Copper, Aluminum, Gold, etc
= 4000 for pure Iron
σ = Conductivity of the material (mho/m)
= 5.8×10^7 (mho/m) for Copper
= 3.82×10^7 (mho/m) for Aluminum
= 4.1×10^7 (mho/m) for Gold
= 6.1×10^7 (mho/m) for Silver
= 1.5×10^7 (mho/m) for Brass

EXAMPLE 4:

The skin depth for a copper wire at 13.56 MHz and 125 kHz can be calculated as:

EQUATION 15:

$$\delta = \frac{1}{\sqrt{\pi f (4\pi \times 10^{-7})(5.8 \times 10^{7})}}$$

$$= \frac{0.0661}{\sqrt{f}} \qquad (m)$$

$$= 0.018\,(mm) \qquad \text{for 13.56 MHz}$$

$$= 0.187\,(mm) \qquad \text{for 125 kHz}$$

As shown in Example 4, 63% of the RF current flowing in a copper wire will flow within a distance of 0.018 mm of the outer edge of wire for 13.56 MHz and 0.187 mm for 125 kHz.

The wire resistance increases with frequency, and the resistance due to the skin depth is called an AC resistance. An approximated formula for the AC resistance is given by:

© 2003 Microchip Technology Inc.

EQUATION 16:

$$R_{ac} = \frac{l}{\sigma A_{active}} \approx \frac{l}{2\pi a \delta \sigma} \qquad (\Omega)$$

$$= \frac{l}{2a}\sqrt{\frac{f\mu}{\pi\sigma}} \qquad (\Omega)$$

$$= (R_{dc})\ \frac{a}{2\delta} \qquad (\Omega)$$

where the skin depth area on the conductor is,

$$A_{active} \approx 2\pi a \delta$$

The AC resistance increases with the square root of the operating frequency.

For the conductor etched on dielectric, substrate is given by:

EQUATION 17:

$$R_{ac} = \frac{l}{\sigma(w+t)\delta} = \frac{l}{(w+t)}\sqrt{\frac{\pi f \mu}{\sigma}} \qquad (\Omega)$$

where w is the width and t is the thickness of the conductor.

Resistance of Conductor with Low Frequency Approximation

When the skin depth is almost comparable to the radius of conductor, the resistance can be obtained with a low frequency approximation[5]:

EQUATION 18:

$$R_{low\ freq} \approx \frac{l}{\sigma \pi a^2}\left[1 + \frac{1}{48}\left(\frac{a}{\delta}\right)^2\right] \qquad (\Omega)$$

The first term of the above equation is the DC resistance, and the second term represents the AC resistance.

TABLE 5: AWG WIRE CHART

Wire Size (AWG)	Dia. in Mils (bare)	Dia. in Mils (coated)	Ohms/ 1000 ft.
1	289.3	—	0.126
2	287.6	—	0.156
3	229.4	—	0.197
4	204.3	—	0.249
5	181.9	—	0.313
6	162.0	—	0.395
7	166.3	—	0.498
8	128.5	131.6	0.628
9	114.4	116.3	0.793
10	101.9	106.2	0.999
11	90.7	93.5	1.26
12	80.8	83.3	1.59
13	72.0	74.1	2.00
14	64.1	66.7	2.52
15	57.1	59.5	3.18
16	50.8	52.9	4.02
17	45.3	47.2	5.05
18	40.3	42.4	6.39
19	35.9	37.9	8.05
20	32.0	34.0	10.1
21	28.5	30.2	12.8
22	25.3	28.0	16.2
23	22.6	24.2	20.3
24	20.1	21.6	25.7
25	17.9	19.3	32.4
26	15.9	17.2	41.0
27	14.2	15.4	51.4
28	12.6	13.8	65.3
29	11.3	12.3	81.2
30	10.0	11.0	106.0
31	8.9	9.9	131
32	8.0	8.8	162
33	7.1	7.9	206
34	6.3	7.0	261
35	5.6	6.3	331
36	5.0	5.7	415
37	4.5	5.1	512
38	4.0	4.5	648
39	3.5	4.0	847
40	3.1	3.5	1080
41	2.8	3.1	1320
42	2.5	2.8	1660
43	2.2	2.5	2140
44	2.0	2.3	2590
45	1.76	1.9	3350
46	1.57	1.7	4210
47	1.40	1.6	5290
48	1.24	1.4	6750
49	1.11	1.3	8420
50	0.99	1.1	10600

Note: mil = 2.54×10^{-3} cm

© 2003 Microchip Technology Inc.

INDUCTANCE OF VARIOUS ANTENNA COILS

An electric current element that flows through a conductor produces a magnetic field. This time-varying magnetic field is capable of producing a flow of current through another conductor – this is called *inductance*. The inductance L depends on the physical characteristics of the conductor. A coil has more inductance than a straight wire of the same material, and a coil with more turns has more inductance than a coil with fewer turns. The inductance L of inductor is defined as the ratio of the total magnetic flux linkage to the current I through the inductor:

EQUATION 19:

$$L = \frac{N\psi}{I} \qquad \text{(Henry)}$$

where:

N = number of turns

I = current

Ψ = the magnetic flux

For a coil with multiple turns, the inductance is greater as the spacing between turns becomes smaller. Therefore, the tag antenna coil that has to be formed in a limited space often needs a multilayer winding to reduce the number of turns.

Calculation of Inductance

Inductance of the coil can be calculated in many different ways. Some are readily available from references[1-7]. It must be remembered that for RF coils the actual resulting inductance may differ from the calculated true result because of distributed capacitance. For that reason, inductance calculations are generally used only for a starting point in the final design.

INDUCTANCE OF A STRAIGHT WOUND WIRE

The inductance of a straight wound wire shown in Figure 1 is given by:

EQUATION 20:

$$L = 0.002l\left[\log_e\frac{2l}{a} - \frac{3}{4}\right] \qquad (\mu H)$$

where:

l and a = length and radius of wire in cm, respectively.

EXAMPLE 6: INDUCTANCE CALCULATION FOR A STRAIGHT WIRE:

The inductance of a wire with 10 feet (304.8cm) long and 2 mm in diameter is calculated as follows:

EQUATION 21:

$$L = 0.002(304.8)\left[\ln\left(\frac{2(304.8)}{0.1}\right) - \frac{3}{4}\right]$$

$$= 0.60967(7.965)$$

$$= 4.855(\mu H)$$

INDUCTANCE OF A SINGLE TURN CIRCULAR COIL

The inductance of a single turn circular coil shown in Figure 6 can be calculated by:

FIGURE 6: A CIRCULAR COIL WITH SINGLE TURN

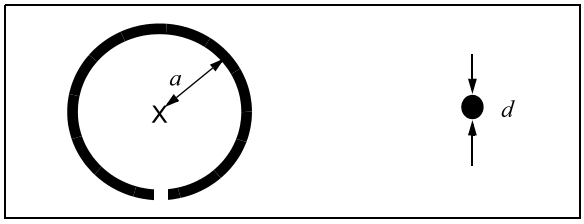

EQUATION 22:

$$L = 0.01257(a)\left[2.303\log_{10}\left(\frac{16a}{d} - 2\right)\right] \qquad (\mu H)$$

where:

a = mean radius of loop in (cm)

d = diameter of wire in (cm)

INDUCTANCE OF AN N-TURN SINGLE LAYER CIRCULAR COIL

FIGURE 7: A CIRCULAR COIL WITH SINGLE TURN

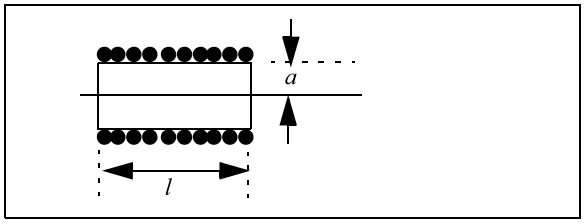

EQUATION 23:

$$L = \frac{(aN)^2}{22.9a + 25.4l} \qquad (\mu H)$$

where:

N = number of turns

l = length in cm

a = the radius of coil in cm

INDUCTANCE OF N-TURN MULTILAYER CIRCULAR COIL

FIGURE 8: N-TURN MULTILAYER CIRCULAR COIL

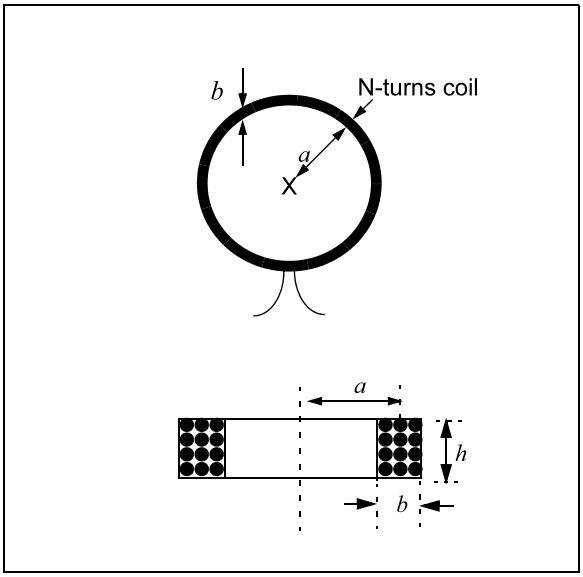

Figure 8 shows an N-turn inductor of circular coil with multilayer. Its inductance is calculated by:

EQUATION 24:

$$L = \frac{0.31(aN)^2}{6a + 9h + 10b} \qquad (\mu H)$$

where:

a = average radius of the coil in cm

N = number of turns

b = winding thickness in cm

h = winding height in cm

© 2003 Microchip Technology Inc.

INDUCTANCE OF SPIRAL WOUND COIL WITH SINGLE LAYER

The inductance of a spiral inductor is calculated by:

EQUATION 25:

$$L = \frac{(0.3937)(aN)^2}{8a + 11b} \qquad (\mu H)$$

FIGURE 9: A SPIRAL COIL

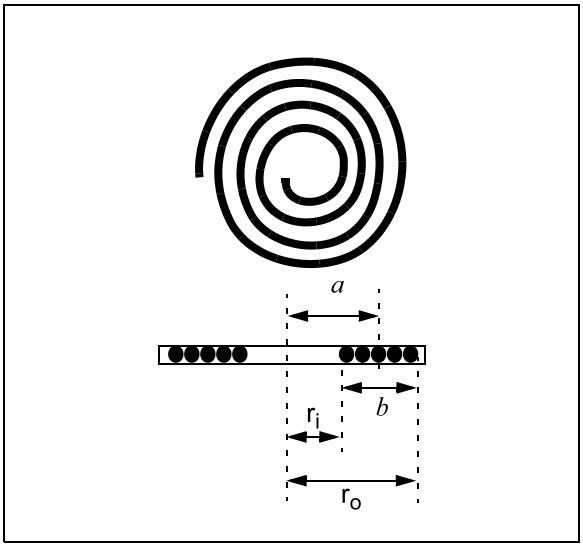

where:

a = $(r_i + r_o)/2$

b = $r_o - r_i$

r_i = Inner radius of the spiral

r_o = Outer radius of the spiral

Note: All dimensions are in cm

INDUCTANCE OF N-TURN SQUARE LOOP COIL WITH MULTILAYER

Inductance of a multilayer square loop coil is calculated by:

EQUATION 26:

$$L = 0.008aN^2\left\{2.303\log_{10}\left(\frac{a}{b+c}\right) + 0.2235\frac{b+c}{a} + 0.726\right\}(\mu H)$$

where:

N = number of turns

a = side of square measured to the center of the rectangular cross section of winding

b = winding length

c = winding depth as shown in Figure 10

Note: All dimensions are in cm

FIGURE 10: N-TURN SQUARE LOOP COIL WITH MULTILAYER

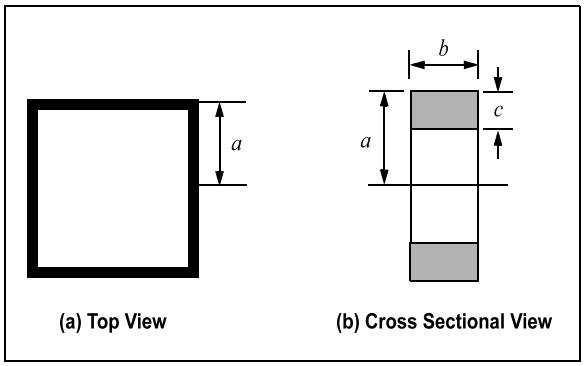

INDUCTANCE OF N-TURN RECTANGULAR COIL WITH MULTILAYER

Inductance of a multilayer rectangular loop coil is calculated by:

EQUATION 27:

$$L = \frac{0.0276\ (CN)^2}{1.908C + 9b + 10h} \quad (\mu H)$$

where:

N = number of turns
C = x + y + 2h
x = width of coil
y = length of coil
b = width of cross section
h = height (coil build up) of cross section

Note: All dimensions are in cm

FIGURE 11: N-TURN SQUARE LOOP COIL WITH MULTILAYER

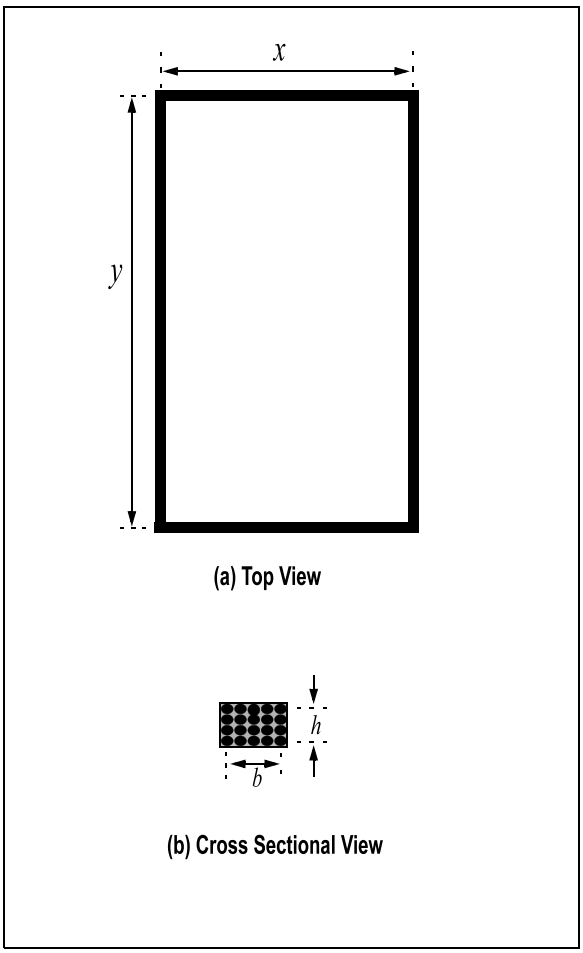

INDUCTANCE OF THIN FILM INDUCTOR WITH A RECTANGULAR CROSS SECTION

Inductance of a conductor with rectangular cross section as shown in Figure 12 is calculated as:

FIGURE 12: A STRAIGHT THIN FILM INDUCTOR

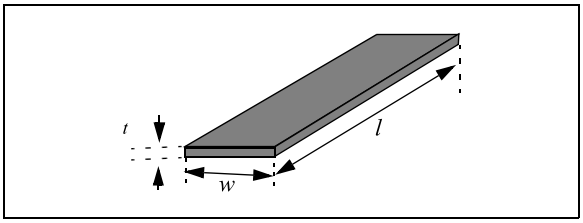

EQUATION 28:

$$L = 0.002l\left\{\ln\left(\frac{2l}{w+t}\right) + 0.50049 + \frac{w+t}{3l}\right\} \quad (\mu H)$$

where:

w = width in cm
t = thickness in cm
l = length of conductor in cm

© 2003 Microchip Technology Inc.

INDUCTANCE OF A FLAT SQUARE COIL

Inductance of a flat square coil of rectangular cross section with N turns is calculated by[2]:

EQUATION 29:

$$L = 0.0467aN^2\left\{\log_{10}\left(2\frac{a^2}{t+w}\right) - \log_{10}(2.414a)\right\} + 0.02032aN^2\left\{0.914 + \left[\frac{0.2235}{a}(t+w)\right]\right\}$$

where:

L = in μH
a = side length in inches
t = thickness in inches
w = width in inches
N = total number of turns

FIGURE 13: SQUARE LOOP INDUCTOR WITH A RECTANGULAR CROSS SECTION

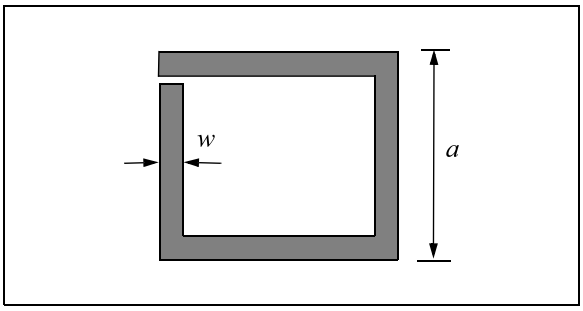

EXAMPLE ON ONE TURN READER ANTENNA

If reader antenna is made of a rectangular loop composed of a thin wire or a thin plate element, its inductance can be calculated by the following simple formula [5]:

FIGURE 14: ONE TURN READER ANTENNA

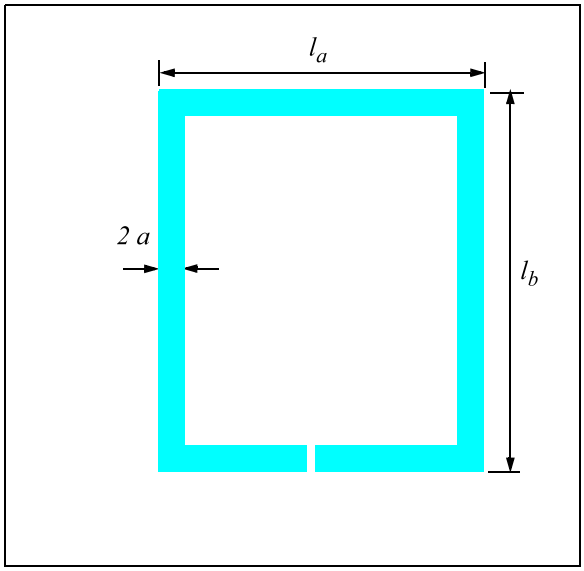

EQUATION 30:

$$L = 4\left\{ l_b \ln\left(\frac{2A}{a(l_b + l_c)}\right) + l_a \ln\left(\frac{2A}{a(l_a + l_c)}\right) + 2\left[a + l_c - (l_a + l_b)\right]\right\} \qquad (nH)$$

where

units are all in cm, and a = radius of wire in cm.

$$l_c = \sqrt{l_a^2 + l_b^2}$$
$$A = l_a \times l_b$$

Example with dimension:

One-turn rectangular shape with l_a = 18.887 cm, l_b = 25.4 cm, width a = 0.254 cm gives 653 (nH) using the above equation.

© 2003 Microchip Technology Inc.

INDUCTANCE OF N-TURN PLANAR SPIRAL COIL

Inductance of planar structure is well calculated in Reference [4]. Consider an inductor made of straight segments as shown in Figure 15. The inductance is the sum of self inductances and mutual inductances[4]:

EQUATION 31:

$$L_T = L_o - M_+ - M_- \qquad (\mu H)$$

where:

L_T = Total Inductance

L_o = Sum of self inductances of all straight segments

M_+ = Sum of positive mutual inductances

M_- = Sum of negative mutual inductances

The mutual inductance is the inductance that is resulted from the magnetic fields produced by adjacent conductors. The mutual inductance is positive when the directions of current on conductors are in the same direction, and negative when the directions of currents are opposite directions. The mutual inductance between two parallel conductors is a function of the length of the conductors and of the geometric mean distance between them. The mutual inductance of two conductors is calculated by:

EQUATION 32:

$$M = 2lF \qquad (nH)$$

where l is the length of conductor in centimeter. F is the mutual inductance parameter and calculated as:

EQUATION 33:

$$F = \ln\left\{\left(\frac{l}{d}\right) + \left[1 + \left(\frac{l}{d}\right)^2\right]^{1/2}\right\} - \left[1 + \left(\frac{l}{d}\right)^2\right]^{1/2} + \left(\frac{d}{l}\right)$$

where d is the geometric mean distance between two conductors, which is approximately equal to the distance between the track center of the conductors.

Let us consider the two conductor segments shown in Figure 15:

FIGURE 15: TWO CONDUCTOR SEGMENTS FOR MUTUAL INDUCTANCE CALCULATION

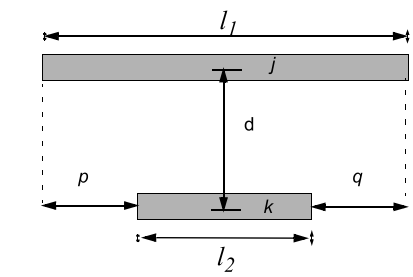

j and k in the above figure are indices of conductor, and p and q are the indices of the length for the difference in the length of the two conductors.

The above configuration (with partial segments) occurs between conductors in multiple turn spiral inductor. The mutual inductance of conductors j and k in the above configuration is:

EQUATION 34:

$$\begin{aligned}
M_{j,k} &= \frac{1}{2}\{(M_{k+p} + M_{k+q}) - (M_p + M_q)\} \\
&= \frac{1}{2}\{(M_j + M_k) - M_q\} \qquad for\ p = 0 && \text{(a)} \\
&= \frac{1}{2}\{(M_j + M_k) - M_p\} \qquad for\ q = 0 && \text{(b)} \\
&= M_{k+p} - M_p \qquad for\ p = q && \text{(c)} \\
&= M_k \qquad for\ p = q = 0 && \text{(d)}
\end{aligned}$$

If the length of l_1 and l_2 are the same ($l_1 = l_2$), then Equation 34 (d) is used. Each mutual inductance term in the above equation is calculated as follows by using Equations 33 and 34:

EQUATION 35:

$$M_{k+p} = 2l_{k+p}F_{k+p}$$

where

$$F_{k+p} = \ln\left\{\left(\frac{l_{k+p}}{d_{j,k}}\right) + \left[1 + \left(\frac{l_{k+p}}{d_{j,k}}\right)^2\right]^{1/2}\right\} - \left[1 + \left(\frac{d_{j,k}}{l_{k+p}}\right)^2\right]^{1/2} + \left(\frac{d_{j,k}}{l_{k+p}}\right)$$

The following examples shows how to use the above formulas to calculate the inductance of a 4-turn rectangular spiral inductor.

© 2003 Microchip Technology Inc.

EXAMPLE 7: INDUCTANCE OF RECTANGULAR PLANAR SPIRAL INDUCTOR

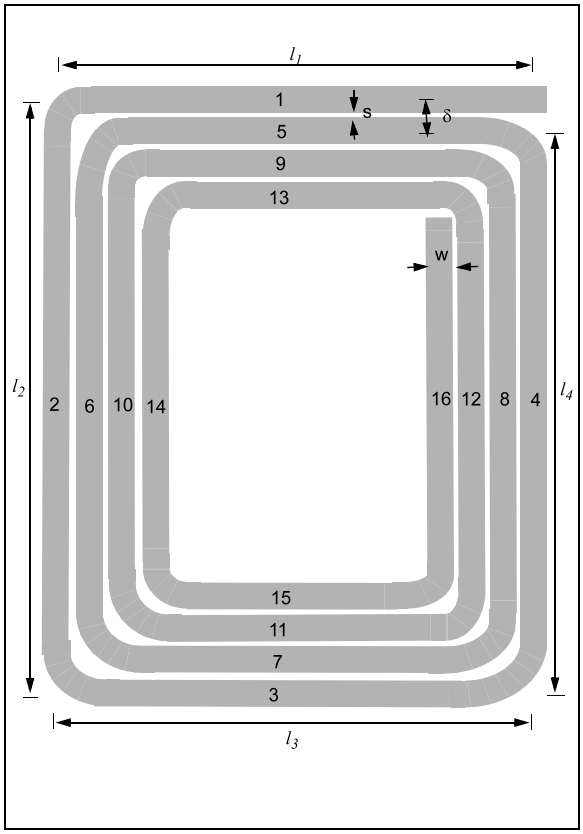

1, 2, 3, ... ,16 are indices of conductor. For four full turn inductor, there are 16 straight segments. *s* is the spacing between conductor, and δ (= s + w) is the distance of track centers between two adjacent conductors. l_1 is the length of conductor 1, l_2 is the length of conductor 2, and so on. The length of conductor segments are:

$$l_3 = l_1,\ l_4 = l_2 - \delta,\ l_5 = l_1 - \delta,\ l_6 = l_4 - \delta,$$
$$l_7 = l_5 - \delta,\ l_8 = l_6 - \delta,\ l_9 = l_7 - \delta,$$
$$l_{10} = l_8 - \delta,\ l_{11} = l_9 - \delta,\ l_{12} = l_{10} - \delta,$$
$$l_{13} = l_{11} - \delta,\ l_{14} = l_{12} - \delta,\ l_{15} = l_{13} - \delta,$$
$$l_{16} = l_{14} - \delta$$

The total inductance of the coil is equal to the sum of the self inductance of each straight segment (L_0 = L1 + L2 + L3 + L4 +.....+ L16) plus all the mutual inductances between these segments as shown in Equation 31.

The self inductance is calculated by Equation (28), and the mutual inductances are calculated by Equations (32) - (34).

For the four-turn spiral, there are both positive and negative mutual inductances. The positive mutual inductance (M_+) is the mutual inductance between conductors that have the same current direction. For example, the current on segments 1 and 5 are in the same direction. Therefore, the mutual inductance between the two conductor segments is positive. On the other hand, the currents on segments 1 and 15 are in the opposite direction. Therefore, the mutual inductance between conductors 1 and 15 is negative term.

The mutual inductance is maximized if the two segments are in parallel, and minimum if they are placed in orthogonal (in 90 degrees). Therefore the mutual inductance between segments 1 and 2, 1 and 6, 1 and 10, 1 and 14, etc, are negligible in calculation.

In Example 7, the total positive mutual inductance terms are:

EQUATION 36:

$$\begin{aligned} M_+ = {} & 2(M_{1,5} + M_{1,9} + M_{1,13}) \\ & +2(M_{5,9} + M_{5,13} + M_{9,13}) \\ & +2(M_{3,7} + M_{3,11} + M_{3,15}) \\ & +2(M_{7,11} + M_{7,15} + M_{11,15}) \\ & +2(M_{2,6} + M_{2,10} + M_{2,14}) \\ & +2(M_{6,10} + M_{6,14} + M_{10,14}) \\ & +2(M_{4,8} + M_{4,12} + M_{4,16}) \\ & +2(M_{8,12} + M_{8,16} + M_{12,16}) \end{aligned}$$

The total negative mutual inductance terms are:

EQUATION 37:

$$\begin{aligned} M_- = {} & 2(M_{1,3} + M_{1,7} + M_{1,11} + M_{1,15}) \\ & +2(M_{5,3} + M_{5,7} + M_{5,11} + M_{5,15}) \\ & +2(M_{9,3} + M_{9,7} + M_{9,11} + M_{9,15}) \\ & +2(M_{13,15} + M_{13,11} + M_{13,7} + M_{13,3}) \\ & +2(M_{2,4} + M_{2,8} + M_{2,12} + M_{2,16}) \\ & +2(M_{6,4} + M_{6,8} + M_{6,12} + M_{6,16}) \\ & +2(M_{10,4} + M_{10,8} + M_{10,12} + M_{10,16}) \\ & +2(M_{14,4} + M_{14,8} + M_{14,12} + M_{14,16}) \end{aligned}$$

See Appendix A for calculation of each individual mutual inductance term in Equations (36) - (37).

© 2003 Microchip Technology Inc.

EXAMPLE 8: INDUCTANCE CALCULATION INCLUDING MUTUAL INDUCTANCE TERMS FOR A RECTANGULAR SHAPED ONE TURN READER ANTENNA

Let us calculate the Inductance of one turn loop etched antenna on PCB board for reader antenna (for example, the MCRF450 reader antenna in the DV103006 development kit) with the following parameters:

$l_2 = l4$ = 10” = 25.4 cm

l_3 = 7.436” = 18.887 cm

$l_1 = l_{1'}$ = 3” = 7.62

gap = 1.4536” = 3.692 cm

trace width (w) = 0.508 cm

trace thickness (t) = 0.0001 cm

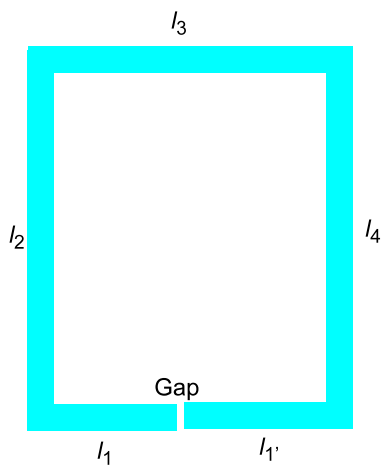

In the one turn rectangular shape inductor, there are four sides. Because of the gap, there are a total of 5 conductor segments. In one-turn inductor, the direction of current on each conductor segment is all opposite directions to each other. For example, the direction of current on segment 2 and 4, 1 and 3, 1’ and 3 are opposite. There is no conductor segments that have the same current direction. Therefore, there is no positive mutual inductance.

From Equation 31, the total inductance is:

EQUATION 38:

$$L_T = L_o + M_+ - M_- \quad (\mu H)$$
$$= L_o - M_- \quad (\mu H)$$

where

M+ = 0 since the direction of current on each segment is opposite with respect to the currents on other segments.

$$L_o = L_1 + L_{1'} + L_2 + L_3 + L_4$$

By solving the self inductance using Equation (28),

$$L_1 = L_{1'} = 59.8 \quad (nH)$$
$$L_2 = L_4 = 259.7 \quad (nH)$$
$$L_3 = 182 \quad (nH)$$
$$L_0 = 821 \quad (nH)$$

Negative mutual inductances are solved as follows:

$$M_- = 2(M_{1,3} + M_{1',3} + M_{2,4})$$
$$M_{2,4} = 2l_2F_{2,4}$$
$$M_{1,3} = \frac{1}{2}(M_3 + M_1 - M_{1'+\text{gap}})$$
$$M_{1',3} = \frac{1}{2}(M_3 + M_{1'} - M_{1+\text{gap}})$$

$$F_{2,4} = \ln\left\{\frac{l_2}{d_{2,4}} + \left[1 + \left(\frac{l_2}{d_{2,4}}\right)^2\right]^{\frac{1}{2}}\right\} - \left[1 + \left(\frac{d_{2,4}}{l_2}\right)^2\right]^{\frac{1}{2}} + \frac{l_2}{d_{2,4}}$$

$$F_3 = \ln\left\{\frac{l_3}{d_{1,3}} + \left[1 + \left(\frac{l_3}{d_{1,3}}\right)^2\right]^{\frac{1}{2}}\right\} - \left[1 + \left(\frac{d_{1,3}}{l_3}\right)^2\right]^{\frac{1}{2}} + \frac{l_3}{d_{1,3}}$$

$$F_1 = \ln\left\{\frac{l_1}{d_{1,3}} + \left[1 + \left(\frac{l_1}{d_{1,3}}\right)^2\right]^{\frac{1}{2}}\right\} - \left[1 + \left(\frac{d_{1,3}}{l_1}\right)^2\right]^{\frac{1}{2}} + \frac{l_1}{d_{1,3}}$$

$$F_{1'} = \ln\left\{\frac{l_{1'}}{d_{1',3}} + \left[1 + \left(\frac{l_{1'}}{d_{1',3}}\right)^2\right]^{\frac{1}{2}}\right\} - \left[1 + \left(\frac{d_{1',3}}{l_{1'}}\right)^2\right]^{\frac{1}{2}} + \frac{l_{1'}}{d_{1',3}}$$

$$M_1 = 2l_1F_1$$
$$M_{1'} = 2l_{1'}F_1$$
$$M_{1'+gap} = 2l_{1'+gap}F_{1'+gap}$$

$$F_{1'+gap} = \ln\left\{\frac{l_{1'+gap}}{d_{1'+gap,3}} + \left[1 + \left(\frac{l_{1'+gap}}{d_{1'+gap,3}}\right)^2\right]^{\frac{1}{2}}\right\} + \frac{l_{1'}}{d_{1',3}} - \left[1 + \left(\frac{d_{1'+gap,3}}{l_{1'+gap}}\right)^2\right]^{\frac{1}{2}}$$

By solving the above equation, the mutual inductance between each conductor are:

$M_{2,4}$ = 30.1928 (nH),

$M_{1,3}$ = 5.1818 (nH) = $M_{1',3}$

Therefore, the total inductance of the antenna is:

$L_T = L_o - M_- = L_o - 2(M_{2,4} + M_{1,3}) =$

$= 797.76 - 81.113 = 716.64$ (nH)

It has been found that the inductance calculated using Equation (38) has about 9% higher than the result using Equation (30) for the same physical dimension. The resulting difference of the two formulas is contributed mainly by the mutual inductance terms. Equation (38) is recommended if it needs very accurate calculation while Equation (30) gives quick answers within about 10 percent of error.

The computation software using Mathlab is shown in Appendix B.

The formulas for inductance are widely published and provide a reasonable approximation for the relationship between inductance and the number of turns for a given physical size[1–7]. When building prototype coils, it is wise to exceed the number of calculated turns by about 10% and then remove turns to achieve a right value. For production coils, it is best to specify an inductance and tolerance rather than a specific number of turns.

© 2003 Microchip Technology Inc.

CONFIGURATION OF ANTENNA CIRCUITS

Reader Antenna Circuits

The inductance for the reader antenna coil for 13.56 MHz is typically in the range of a few microhenries (μH). The antenna can be formed by air-core or ferrite core inductors. The antenna can also be formed by a metallic or conductive trace on PCB board or on flexible substrate.

The reader antenna can be made of either a single coil, that is typically forming a series or a parallel resonant circuit, or a double loop (transformer) antenna coil. Figure 16 shows various configurations of reader antenna circuit. The coil circuit must be tuned to the operating frequency to maximize power efficiency. The tuned LC resonant circuit is the same as the band-pass filter that passes only a selected frequency. The Q of the tuned circuit is related to both read range and bandwidth of the circuit. More on this subject will be discussed in the following section.

Choosing the size and type of antenna circuit depends on the system design topology. The series resonant circuit results in minimum impedance at the resonance frequency. Therefore, it draws a maximum current at the resonance frequency. Because of its simple circuit topology and relatively low cost, this type of antenna circuit is suitable for proximity reader antenna.

On the other hand, a parallel resonant circuit results in maximum impedance at the resonance frequency. Therefore, maximum voltage is available at the resonance frequency. Although it has a minimum resonant current, it still has a strong circulating current that is proportional to Q of the circuit. The double loop antenna coil that is formed by two parallel antenna circuits can also be used.

The frequency tolerance of the carrier frequency and output power level from the read antenna is regulated by government regulations (e.g., FCC in the USA).

FCC limits for 13.56 MHz frequency band are as follows:

1. Tolerance of the carrier frequency: 13.56 MHz +/- 0.01% = +/- 1.356 kHz.
2. Frequency bandwidth: +/- 7 kHz.
3. Power level of fundamental frequency: 10 mv/m at 30 meters from the transmitter.
4. Power level for harmonics: -50.45 dB down from the fundamental signal.

The transmission circuit including the antenna coil must be designed to meet the FCC limits.

FIGURE 16: VARIOUS READER ANTENNA CIRCUITS

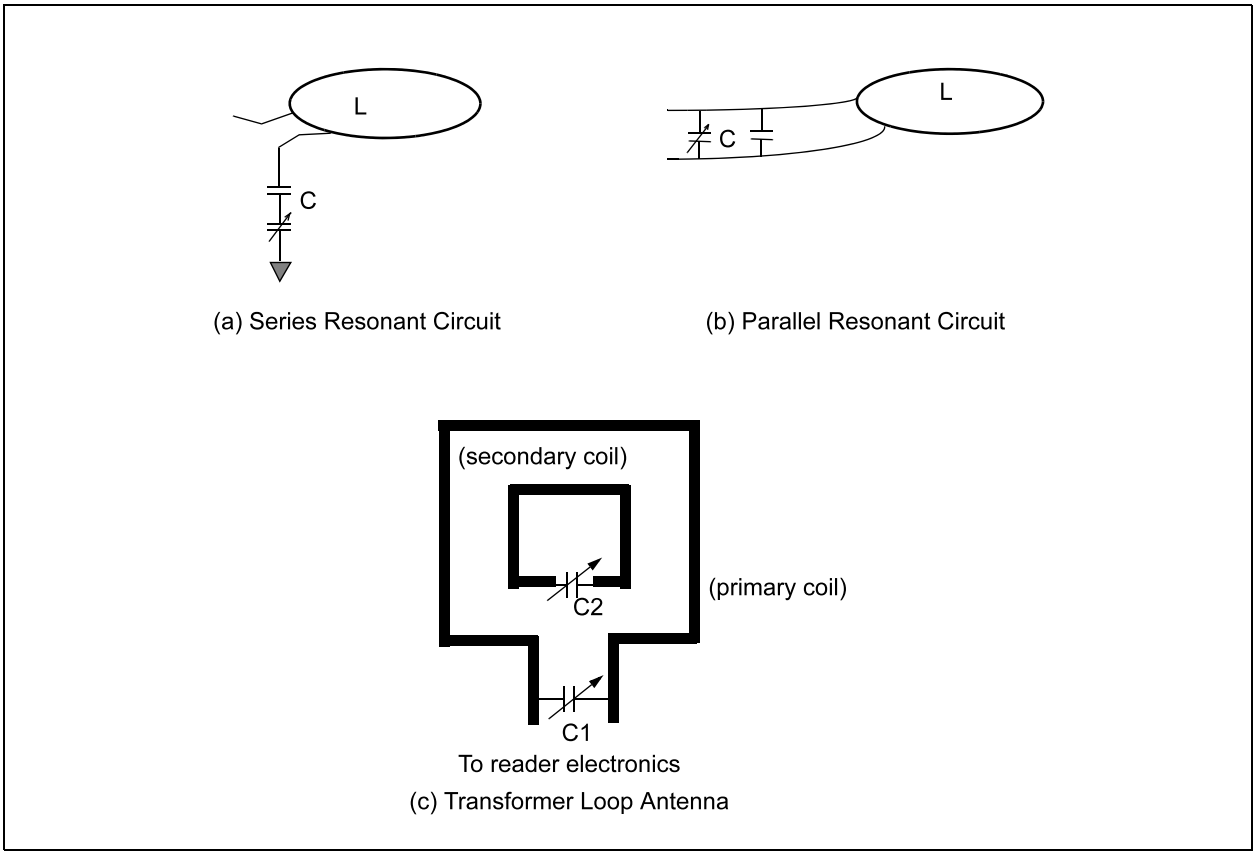

Tag Antenna Circuits

The MCRF355 device communicates data by tuning and detuning the antenna circuit (see AN707). Figure 17 shows examples of the external circuit arrangement.

The external circuit must be tuned to the resonant frequency of the reader antenna. In a detuned condition, a circuit element between the antenna B and VSS pads is shorted. The frequency difference (delta frequency) between tuned and detuned frequencies must be adjusted properly for optimum operation. It has been found that maximum modulation index and maximum read range occur when the tuned and detuned frequencies are separated by 3 to 6 MHz.

The tuned frequency is formed from the circuit elements between the antenna A and VSS pads without shorting the antenna B pad. The detuned frequency is found when the antenna B pad is shorted. This detuned frequency is calculated from the circuit between antenna A and VSS pads excluding the circuit element between antenna B and VSS pads.

In Figure 17 (a), the tuned resonant frequency is:

EQUATION 39:

$$f_o = \frac{1}{2\pi\sqrt{L_T C}}$$

where:

L_T = $L_1 + L_2 + 2L_M$ = Total inductance between antenna A and VSS pads

L_1 = inductance between antenna A and antenna B pads

L_2 = inductance between antenna B and VSS pads

M = mutual inductance between coil 1 and coil 2

= $k\sqrt{L_1 L_2}$

k = coupling coefficient between the two coils

C = tuning capacitance

and detuned frequency is:

EQUATION 40:

$$f_{detuned} = \frac{1}{2\pi\sqrt{L_1 C}}$$

In this case, $f_{detuned}$ is higher than f_{tuned}.

Figure 17(b) shows another example of the external circuit arrangement. This configuration controls C_2 for tuned and detuned frequencies. The tuned and untuned frequencies are:

EQUATION 41:

$$f_{tuned} = \frac{1}{2\pi\sqrt{\left(\frac{C_1 C_2}{C_1 + C_2}\right)L}}$$

and

EQUATION 42:

$$f_{detuned} = \frac{1}{2\pi\sqrt{L C_1}}$$

A typical inductance of the coil is about a few microhenry with a few turns. Once the inductance is determined, the resonant capacitance is calculated from the above equations. For example, if a coil has an inductance of 1.3 µH, then it needs a 106 pF of capacitance to resonate at 13.56 MHz.

© 2003 Microchip Technology Inc.

CONSIDERATION ON QUALITY FACTOR Q AND BANDWIDTH OF TUNING CIRCUIT

The voltage across the coil is a product of quality factor Q of the circuit and input voltage. Therefore, for a given input voltage signal, the coil voltage is directly proportional to the Q of the circuit. In general, a higher Q results in longer read range. However, the Q is also related to the bandwidth of the circuit as shown in the following equation.

EQUATION 43:

$$Q = \frac{f_o}{B}$$

FIGURE 17: VARIOUS EXTERNAL CIRCUIT CONFIGURATIONS

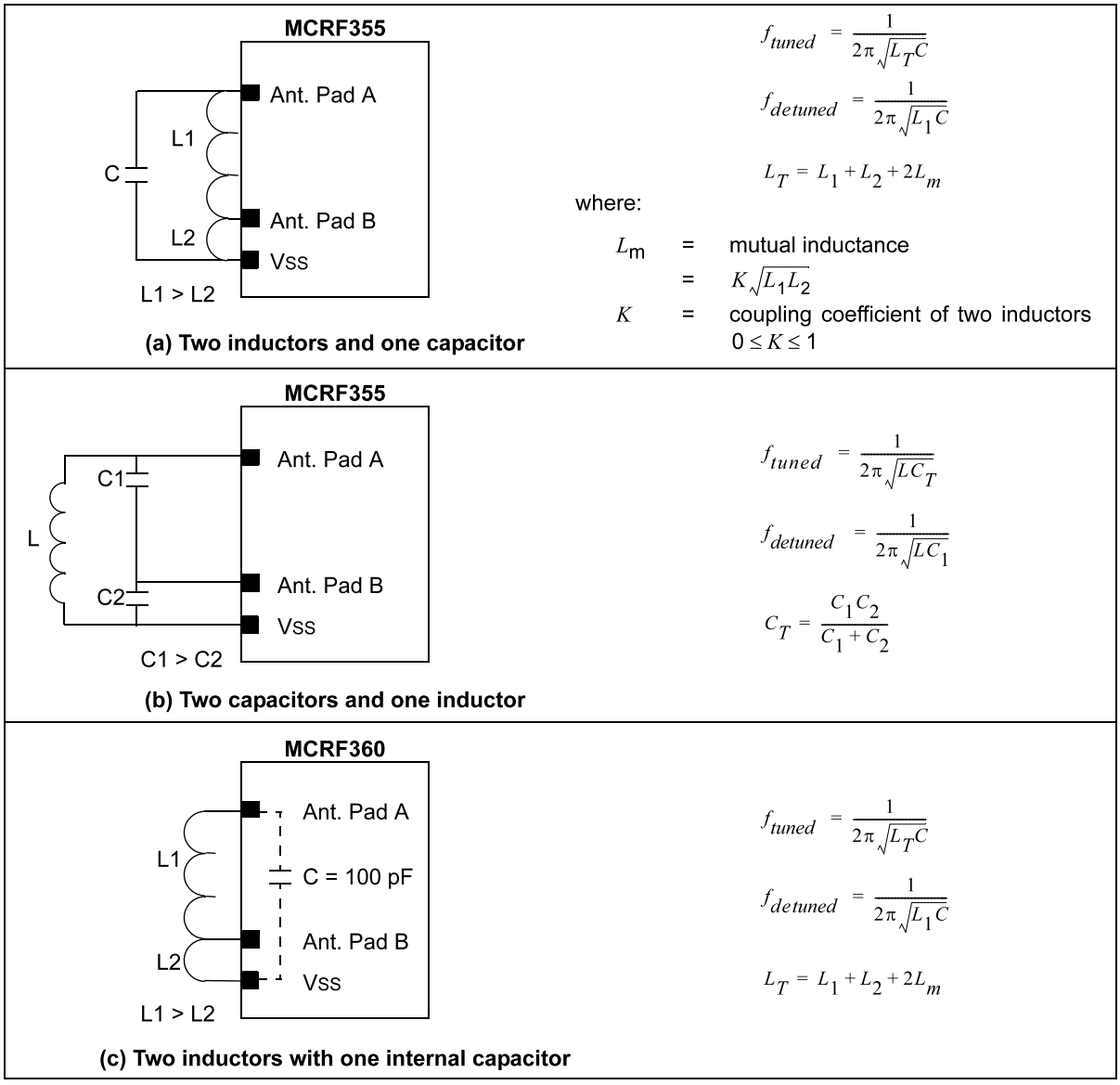

Bandwidth requirement and limit on circuit Q for MCRF355

Since the MCRF355 operates with a data rate of 70 kHz, the reader antenna circuit needs a bandwidth of at least twice of the data rate. Therefore, it needs:

EQUATION 44:

$$B_{minimum} = 140 \text{ kHz}$$

Assuming the circuit is turned at 13.56 MHz, the maximum attainable Q is obtained from Equations 43 and 44:

EQUATION 45:

$$Q_{max} = \frac{f_o}{B} = 96.8$$

In a practical LC resonant circuit, the range of Q for 13.56 MHz band is about 40. However, the Q can be significantly increased with a ferrite core inductor. The system designer must consider the above limits for optimum operation.

RESONANT CIRCUITS

Once the frequency and the inductance of the coil are determined, the resonant capacitance can be calculated from:

EQUATION 46:

$$C = \frac{1}{L(2\pi f_o)^2}$$

In practical applications, parasitic (distributed) capacitance is present between turns. The parasitic capacitance in a typical tag antenna coil is a few (pF). This parasitic capacitance increases with operating frequency of the device.

There are two different resonant circuits: parallel and series. The parallel resonant circuit has maximum impedance at the resonance frequency. It has a minimum current and maximum voltage at the resonance frequency. Although the current in the circuit is minimum at the resonant frequency, there are a circulation current that is proportional to Q of the circuit. The parallel resonant circuit is used in both the tag and the high power reader antenna circuit.

On the other hand, the series resonant circuit has a minimum impedance at the resonance frequency. As a result, maximum current is available in the circuit. Because of its simplicity and the availability of the high current into the antenna element, the series resonant circuit is often used for a simple proximity reader.

Parallel Resonant Circuit

Figure 18 shows a simple parallel resonant circuit. The total impedance of the circuit is given by:

EQUATION 47:

$$Z(j\omega) = \frac{j\omega L}{(1-\omega^2 LC) + j\frac{\omega L}{R}} \quad (\Omega)$$

where ω is an angular frequency given as $\omega = 2\pi f$.

The maximum impedance occurs when the denominator in the above equation is minimized. This condition occurs when:

EQUATION 48:

$$\omega^2 LC = 1$$

This is called a resonance condition, and the resonance frequency is given by:

EQUATION 49:

$$f_0 = \frac{1}{2\pi\sqrt{LC}}$$

By applying Equation 48 into Equation 47, the impedance at the resonance frequency becomes:

EQUATION 50:

$$Z = R$$

where R is the load resistance.

FIGURE 18: PARALLEL RESONANT CIRCUIT

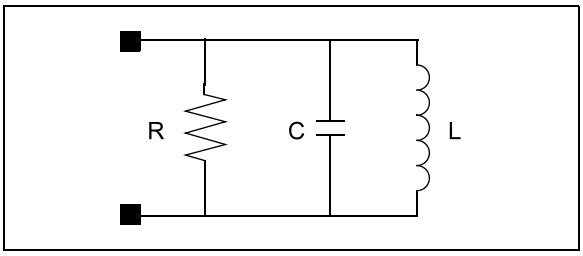

The R and C in the parallel resonant circuit determine the bandwidth, B, of the circuit.

EQUATION 51:

$$B = \frac{1}{2\pi RC} \quad (Hz)$$

The quality factor, Q, is defined by various ways such as:

© 2003 Microchip Technology Inc.

EQUATION 52:

$$Q = \frac{\text{Energy Stored in the System per One Cycle}}{\text{Energy Dissipated in the System per One Cycle}}$$

$$= \frac{\text{reactance}}{\text{resistance}}$$

$$= \frac{\omega L}{r} \qquad \text{For inductance}$$

$$= \frac{1}{\omega c r} \qquad \text{For capacitance}$$

$$= \frac{f_0}{B}$$

where:

ω = $2\pi f$ = angular frequency
f_o = resonant frequency
B = bandwidth
r = ohmic losses

By applying Equation 49 and Equation 51 into Equation 52, the Q in the parallel resonant circuit is:

EQUATION 53:

$$Q = R\sqrt{\frac{C}{L}}$$

The Q in a parallel resonant circuit is proportional to the load resistance R and also to the ratio of capacitance and inductance in the circuit.

When this parallel resonant circuit is used for the tag antenna circuit, the voltage drop across the circuit can be obtained by combining Equations 8 and 53:

EQUATION 54:

$$V_o = 2\pi f_o N Q S B_o \cos\alpha$$

$$= 2\pi f_0 N\left(R\sqrt{\frac{C}{L}}\right) S B_0 \cos\alpha$$

The above equation indicates that the induced voltage in the tag coil is inversely proportional to the square root of the coil inductance, but proportional to the number of turns and surface area of the coil.

Series Resonant Circuit

A simple series resonant circuit is shown in Figure 19. The expression for the impedance of the circuit is:

EQUATION 55:

$$Z(j\omega) = r + j(X_L - X_C) \qquad (\Omega)$$

where:

r = a DC ohmic resistance of coil and capacitor
X_L *and* X_C = the reactance of the coil and capacitor, respectively, such that:

EQUATION 56:

$$X_L = 2\pi f_o L \qquad (\Omega)$$

EQUATION 57:

$$X_c = \frac{1}{2\pi f_o C} \qquad (\Omega)$$

The impedance in Equation 55 becomes minimized when the reactance component cancelled out each other such that $X_L = X_C$. This is called a resonance condition. The resonance frequency is same as the parallel resonant frequency given in Equation 49.

FIGURE 19: SERIES RESONANCE CIRCUIT

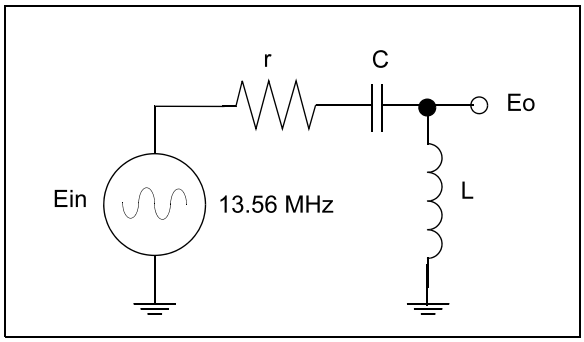

The half power frequency bandwidth is determined by r and L, and given by:

EQUATION 58:

$$B = \frac{r}{2\pi L} \qquad (Hz)$$

The quality factor, Q, in the series resonant circuit is given by:

$$Q = \frac{f_0}{B} = \frac{\omega L}{r} = \frac{1}{r\omega C}$$

The series circuit forms a voltage divider, the voltage drops in the coil is given by:

EQUATION 59:

$$V_o = \frac{jX_L}{r + jX_L - jX_c} V_{in}$$

When the circuit is tuned to a resonant frequency such as $X_L = X_C$, the voltage across the coil becomes:

EQUATION 60:

$$V_o = \frac{jX_L}{r} V_{in}$$

$$= jQV_{in}$$

The above equation indicates that the coil voltage is a product of input voltage and Q of the circuit. For example, a circuit with Q of 40 can have a coil voltage that is 40 times higher than input signal. This is because all energy in the input signal spectrum becomes squeezed into a single frequency band.

EXAMPLE 9: CIRCUIT PARAMETERS

If the DC ohmic resistance r is 5 Ω, then the L and C values for 13.56 MHz resonant circuit with Q = 40 are:

EQUATION 61:

$$X_L = Qr_s = 200\Omega$$

$$L = \frac{X_L}{2\pi f} = \frac{200}{2\pi(13.56MHz)} = 2.347 \qquad (\mu H)$$

$$C = \frac{1}{2\pi f X_L} = \frac{1}{2\pi(13.56\ \text{MHz})(200)} = 58.7 \quad (\text{pF})$$

© 2003 Microchip Technology Inc.

TUNING METHOD

The circuit must be tuned to the resonance frequency for a maximum performance (read range) of the device. Two examples of tuning the circuit are as follows:

- **Voltage Measurement Method:**
  a) Set up a voltage signal source at the resonance frequency.
  b) Connect a voltage signal source across the resonant circuit.
  c) Connect an Oscilloscope across the resonant circuit.
  d) Tune the capacitor or the coil while observing the signal amplitude on the Oscilloscope.
  e) Stop the tuning at the maximum voltage.

- **S-Parameter or Impedance Measurement Method using Network Analyzer:**
  a) Set up an S-Parameter Test Set (Network Analyzer) for S11 measurement, and do a calibration.
  b) Measure the S11 for the resonant circuit.
  c) Reflection impedance or reflection admittance can be measured instead of the S11.
  d) Tune the capacitor or the coil until a maximum null (S11) occurs at the resonance frequency, f_o. For the impedance measurement, the maximum peak will occur for the parallel resonant circuit, and minimum peak for the series resonant circuit.

FIGURE 20: VOLTAGE VS. FREQUENCY FOR RESONANT CIRCUIT

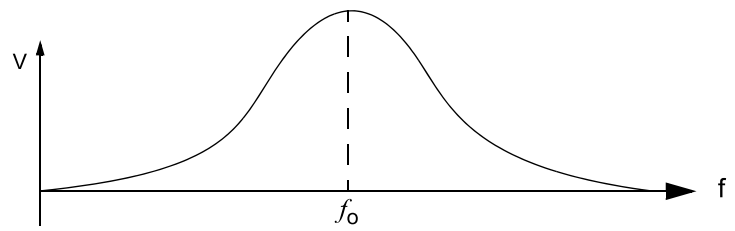

FIGURE 21: FREQUENCY RESPONSES FOR RESONANT CIRCUIT

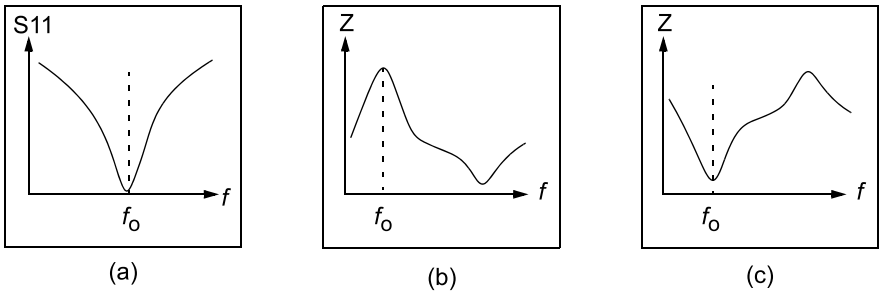

Note 1: (a) S11 Response, (b) Impedance Response for a Parallel Resonant Circuit, and (c) Impedance Response for a Series Resonant Circuit.

2: In (a), the null at the resonance frequency represents a minimum input reflection at the resonance frequency. This means the circuit absorbs the signal at the frequency while other frequencies are reflected back. In (b), the impedance curve has a peak at the resonance frequency. This is because the parallel resonant circuit has a maximum impedance at the resonance frequency. (c) shows a response for the series resonant circuit. Since the series resonant circuit has a minimum impedance at the resonance frequency, a minimum peak occurs at the resonance frequency.

© 2003 Microchip Technology Inc.

READ RANGE OF RFID DEVICES

Read range is defined as a maximum communication distance between the reader and tag. In general, the read range of passive RFID products varies, depending on system configuration and is affected by the following parameters:

a) Operating frequency and performance of antenna coils
b) Q of antenna and tuning circuit
c) Antenna orientation
d) Excitation current
e) Sensitivity of receiver
f) Coding (or modulation) and decoding (or demodulation) algorithm
g) Number of data bits and detection (interpretation) algorithm
h) Condition of operating environment (electrical noise), etc.

The read range of 13.56 MHz is relatively longer than that of 125 kHz device. This is because the antenna efficiency increases as the frequency increases. With a given operating frequency, the conditions (a – c) are related to the antenna configuration and tuning circuit. The conditions (d – e) are determined by a circuit topology of reader. The condition (f) is a communication protocol of the device, and (g) is related to a firmware software program for data detection.

Assuming the device is operating under a given condition, the read range of the device is largely affected by the performance of the antenna coil. It is always true that a longer read range is expected with the larger size of the antenna with a proper antenna design. Figures 22 and 23 show typical examples of the read range of various passive RFID devices.

FIGURE 22: READ RANGE VS. TAG SIZE FOR TYPICAL PROXIMITY APPLICATIONS*

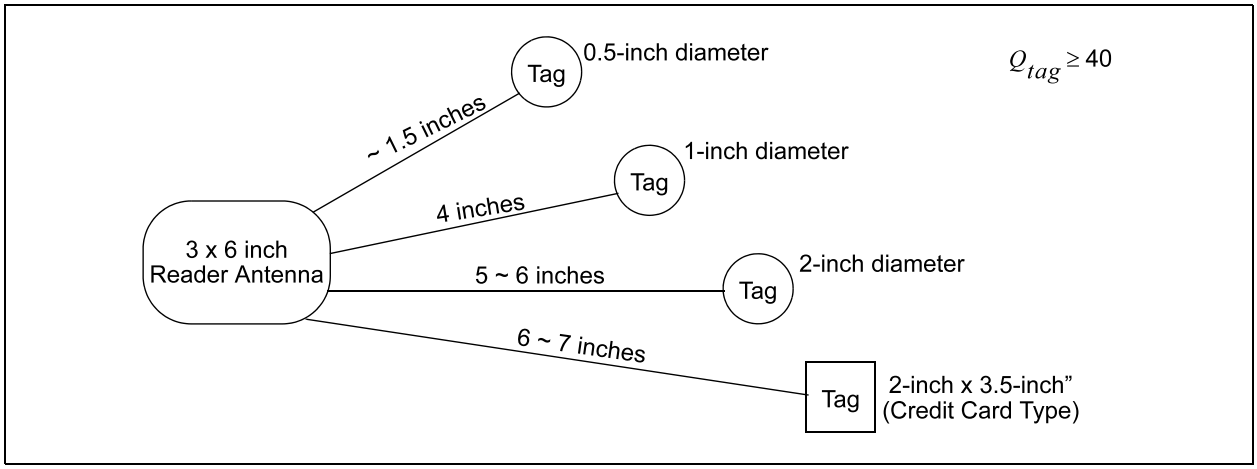

FIGURE 23: READ RANGE VS. TAG SIZE FOR TYPICAL LONG RANGE APPLICATIONS*

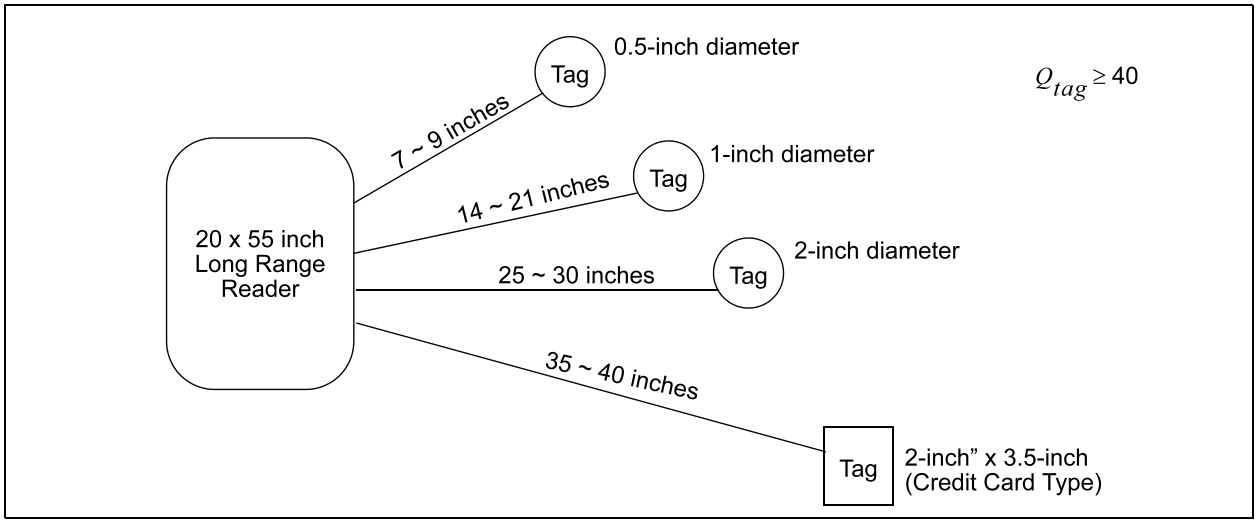

Note: Actual results may be shorter or longer than the range shown, depending upon factors discussed above.

© 2003 Microchip Technology Inc.

APPENDIX A: CALCULATION OF MUTUAL INDUCTANCE TERMS IN EQUATIONS 36 AND 37

Positive Mutual Inductance Terms:

EQUATION A.1 Mutual inductance between conductors 1 and 5

$$M_{1,5} = \frac{1}{2}\left\{\left(M_1^{1,5} + M_5^{1,5}\right) - M_\delta^{1,5}\right\}$$

where:

$$M_1^{1,5} = 2l_1F_1^{1,5}$$

$$M_5^{1,5} = 2l_5F_5^{1,5}$$

$$M_\delta^{1,5} = 2d_{1,5}F_\delta^{1,5}$$

$$F_1^{1,5} = \ln\left\{\frac{l_1}{d_{1,5}} + \left[1 + \left(\frac{l_1}{d_{1,5}}\right)^2\right]^{1/2}\right\} - \left[1 + \left(\frac{d_{1,5}}{l_1}\right)^2\right]^{1/2} + \left(\frac{d_{1,5}}{l_1}\right)$$

$$F_5^{1,5} = \ln\left\{\frac{l_5}{d_{1,5}} + \left[1 + \left(\frac{l_5}{d_{1,5}}\right)^2\right]^{1/2}\right\} - \left[1 + \left(\frac{d_{1,5}}{l_5}\right)^2\right]^{1/2} + \left(\frac{d_{1,5}}{l_5}\right)$$

$$F_\delta^{1,5} = \ln\left\{\frac{l_\delta}{d_{1,5}} + \left[1 + \left(\frac{l_\delta}{d_{1,5}}\right)^2\right]^{1/2}\right\} - \left[1 + \left(\frac{d_{1,5}}{l_\delta}\right)^2\right]^{1/2} + \left(\frac{d_{1,5}}{l_\delta}\right)$$

$$\delta = w + s$$

$$l_\delta = \delta$$

where $d_{1,5}$ is the distance between track centers of conductor l_1 and l_5. s is the interspacing between conductors l_1 and l_5, w is the width of track, δ is $s + w$.

$F_1^{1,5}$ is the mutual inductance parameter between conductor segments 1 and 5 by viewing from conductor 1.

$F_5^{1,5}$ is the mutual inductance parameter between conductor segments 1 and 5 by viewing from conductor 5.

$F_\delta^{1,5}$ is the mutual inductance parameter between conductor segments 1 and 5 by viewing from the length difference between the two conductors.

EQUATION A.2 Mutual inductance between conductors 1 and 9

$$M_{1,9} = \frac{1}{2}\left\{\left(M_{9+2\delta}^{1,9} + M_{9+\delta}^{1,9}\right) - \left(M_{2\delta}^{1,9} + M_\delta^{1,9}\right)\right\}$$

where:

$$M_{9+2\delta}^{1,9} = 2l_{9+2\delta}F_{9+2\delta}^{1,9}$$

$$M_{9+\delta}^{1,9} = 2l_{9+\delta}F_{9+\delta}^{1,9}$$

$$M_{2\delta}^{1,9} = 2d_{1,9}F_{2\delta}^{1,9}$$

$$M_\delta^{1,9} = 2d_{1,9}F_\delta^{1,9}$$

$$F_{9+2\delta}^{1,9} = \ln\left\{\frac{l_{9+2\delta}}{d_{1,9}} + \left[1 + \left(\frac{l_{9+2\delta}}{d_{1,9}}\right)^2\right]^{1/2}\right\} - \left[1 + \left(\frac{d_{1,9}}{l_{9+2\delta}}\right)^2\right]^{1/2} + \left(\frac{d_{1,9}}{l_{9+2\delta}}\right)$$

$$F_{9+\delta}^{1,9} = \ln\left\{\frac{l_{9+\delta}}{d_{1,9}} + \left[1 + \left(\frac{l_{9+\delta}}{d_{1,9}}\right)^2\right]^{1/2}\right\} - \left[1 + \left(\frac{d_{1,9}}{l_{9+\delta}}\right)^2\right]^{1/2} + \left(\frac{d_{1,9}}{l_{9+\delta}}\right)$$

$$F_{2\delta}^{1,9} = \ln\left\{\frac{l_{2\delta}}{d_{1,9}} + \left[1 + \left(\frac{l_{2\delta}}{d_{1,9}}\right)^2\right]^{1/2}\right\} - \left[1 + \left(\frac{d_{1,9}}{l_{2\delta}}\right)^2\right]^{1/2} + \left(\frac{d_{1,9}}{l_{2\delta}}\right)$$

$$F_\delta^{1,9} = \ln\left\{\frac{l_\delta}{d_{1,9}} + \left[1 + \left(\frac{l_\delta}{d_{1,9}}\right)^2\right]^{1/2}\right\} - \left[1 + \left(\frac{d_{1,9}}{l_\delta}\right)^2\right]^{1/2} + \left(\frac{d_{1,9}}{l_\delta}\right)$$

© 2003 Microchip Technology Inc.

EQUATION A.3 Mutual inductance between conductors 1 and 13

$$M_{1,13} = \frac{1}{2}\left\{\left(M^{1,13}_{13+3\delta} + M^{1,13}_{13+2\delta}\right) - \left(M^{1,13}_{3\delta} + M^{1,13}_{2\delta}\right)\right\}$$

where:

$$M^{1,13}_{13+3\delta} = 2l_{13+3\delta}F^{1,13}_{13+3\delta}$$

$$M^{1,13}_{13+2\delta} = 2l_{13+2\delta}F^{1,13}_{13+\delta}$$

$$M^{1,13}_{3\delta} = 2d_{1,13}F^{1,13}_{3\delta}$$

$$M^{1,13}_{2\delta} = 2d_{1,13}F^{1,13}_{2\delta}$$

$$F^{1,13}_{13+3\delta} = \ln\left\{\frac{l_{13+3\delta}}{d_{1,13}} + \left[1+\left(\frac{l_{13+3\delta}}{d_{1,13}}\right)^2\right]^{1/2}\right\} - \left[1+\left(\frac{d_{1,13}}{l_{13+3\delta}}\right)^2\right]^{1/2} + \left(\frac{d_{1,13}}{l_{13+3\delta}}\right)$$

$$F^{1,13}_{13+\delta} = \ln\left\{\frac{l_{13+\delta}}{d_{1,13}} + \left[1+\left(\frac{l_{13+\delta}}{d_{1,13}}\right)^2\right]^{1/2}\right\} - \left[1+\left(\frac{d_{1,13}}{l_{13+\delta}}\right)^2\right]^{1/2} + \left(\frac{d_{1,13}}{l_{13+\delta}}\right)$$

$$F^{1,13}_{3\delta} = \ln\left\{\frac{l_{3\delta}}{d_{1,13}} + \left[1+\left(\frac{l_{3\delta}}{d_{1,13}}\right)^2\right]^{1/2}\right\} - \left[1+\left(\frac{d_{1,13}}{l_{3\delta}}\right)^2\right]^{1/2} + \left(\frac{d_{1,13}}{l_{3\delta}}\right)$$

$$F^{1,13}_{2\delta} = \ln\left\{\frac{l_{2\delta}}{d_{1,13}} + \left[1+\left(\frac{l_{2\delta}}{d_{1,13}}\right)^2\right]^{1/2}\right\} - \left[1+\left(\frac{d_{1,13}}{l_{2\delta}}\right)^2\right]^{1/2} + \left(\frac{d_{1,13}}{l_{2\delta}}\right)$$

EQUATION A.4 Mutual inductance between conductors 5 and 9

$$M_{5,9} = M^{5,9}_{9+\delta} - M^{5,9}_{\delta}$$

where:

$$M^{5,9}_{9+\delta} = 2l_1F^{5,9}_{9+\delta}$$

$$M^{5,9}_{\delta} = 2l_1F^{5,9}_{\delta}$$

$$F^{5,9}_{9+\delta} = \ln\left\{\frac{l_{9+\delta}}{d_{5,9}} + \left[1+\left(\frac{l_{9+\delta}}{d_{5,9}}\right)^2\right]^{1/2}\right\} - \left[1+\left(\frac{d_{5,9}}{l_{9+\delta}}\right)^2\right]^{1/2} + \left(\frac{d_{5,9}}{l_{9+\delta}}\right)$$

$$F^{5,9}_{\delta} = \ln\left\{\frac{l_{\delta}}{d_{5,9}} + \left[1+\left(\frac{l_{\delta}}{d_{5,9}}\right)^2\right]^{1/2}\right\} - \left[1+\left(\frac{d_{5,9}}{l_{\delta}}\right)^2\right]^{1/2} + \left(\frac{d_{5,9}}{l_{\delta}}\right)$$

EQUATION A.5 Mutual inductance between conductors 5 and 13

$$M_{5,13} = M^{5,13}_{13+2\delta} - M^{5,13}_{2\delta}$$

where:

$$M^{5,13}_{13+2\delta} = 2l_{13+2\delta}F^{5,13}_{13+2\delta}$$

$$M^{5,13}_{2\delta} = 2l_{2\delta}F^{5,13}_{2\delta}$$

$$F^{5,13}_{13+2\delta} = \ln\left\{\frac{l_{13+2\delta}}{d_{5,13}} + \left[1+\left(\frac{l_{13+2\delta}}{d_{5,13}}\right)^2\right]^{1\,\S\,2}\right\} - \left[1+\left(\frac{d_{5,13}}{l_{13+2\delta}}\right)^2\right]^{1\,\S\,2} + \left(\frac{d_{5,13}}{l_{13+2\delta}}\right)$$

$$F^{5,13}_{2\delta} = \ln\left\{\frac{l_{2\delta}}{d_{5,13}} + \left[1+\left(\frac{l_{2\delta}}{d_{5,13}}\right)^2\right]^{1/2}\right\} - \left[1+\left(\frac{d_{5,13}}{l_{2\delta}}\right)^2\right]^{1/2} + \left(\frac{d_{5,13}}{l_{2\delta}}\right)$$

EQUATION A.6 Mutual inductance between conductors 9 and 13

$$M_{9,13} = M^{9,13}_{13+\delta} - M^{9,13}_{\delta}$$

where:

$$M^{9,13}_{13+\delta} = 2l_{13+\delta}F^{9,13}_{13+\delta}$$

$$M^{9,13}_{\delta} = 2l_{\delta}F^{9,13}_{\delta}$$

$$F^{9,13}_{13+\delta} = \ln\left\{\frac{l_{13+\delta}}{d_{9,13}} + \left[1+\left(\frac{l_{13+\delta}}{d_{9,13}}\right)^2\right]^{1/2}\right\} - \left[1+\left(\frac{d_{9,13}}{l_{13+\delta}}\right)^2\right]^{1/2} + \left(\frac{d_{9,13}}{l_{13+\delta}}\right)$$

$$F^{9,13}_{\delta} = \ln\left\{\frac{l_{\delta}}{d_{9,13}} + \left[1+\left(\frac{l_{\delta}}{d_{9,13}}\right)^2\right]^{1/2}\right\} - \left[1+\left(\frac{d_{9,13}}{l_{\delta}}\right)^2\right]^{1/2} + \left(\frac{d_{9,13}}{l_{\delta}}\right)$$

© 2003 Microchip Technology Inc.

EQUATION A.7 Mutual inductance between conductors 3 and 7

$$M_{3,7} = M_{7+\delta}^{3,7} - M_{\delta}^{3,7}$$

where:

$$M_{7+\delta}^{3,7} = 2l_{7+\delta}F_{7+\delta}^{3,7}$$

$$M_{\delta}^{3,7} = 2l_{\delta}F_{\delta}^{3,7}$$

$$F_{7+\delta}^{3,7} = \ln\left\{\frac{l_{7+\delta}}{d_{3,7}} + \left[1+\left(\frac{l_{7+\delta}}{d_{3,7}}\right)^2\right]^{1/2}\right\} - \left[1+\left(\frac{d_{3,7}}{l_{7+\delta}}\right)^2\right]^{1/2} + \left(\frac{d_{3,7}}{l_{7+\delta}}\right)$$

$$F_{\delta}^{3,7} = \ln\left\{\frac{l_{\delta}}{d_{3,7}} + \left[1+\left(\frac{l_{\delta}}{d_{3,7}}\right)^2\right]^{1/2}\right\} - \left[1+\left(\frac{d_{3,7}}{l_{\delta}}\right)^2\right]^{1/2} + \left(\frac{d_{9,13}}{l_{\delta}}\right)$$

EQUATION A.8 Mutual inductance between conductors 3 and 11

$$M_{3,11} = M_{11+2\delta}^{3,11} - M_{2\delta}^{3,11}$$

where:

$$M_{11+2\delta}^{3,11} = 2l_{11+2\delta}F_{11+2\delta}^{3,11}$$

$$M_{2\delta}^{3,11} = 2l_{2\delta}F_{2\delta}^{3,11}$$

$$F_{11+2\delta}^{3,11} = \ln\left\{\frac{l_{11+2\delta}}{d_{3,11}} + \left[1+\left(\frac{l_{11+2\delta}}{d_{3,11}}\right)^2\right]^{1/2}\right\} - \left[1+\left(\frac{d_{3,11}}{l_{11+2\delta}}\right)^2\right]^{1/2} + \left(\frac{d_{3,11}}{l_{11+2\delta}}\right)$$

$$F_{2\delta}^{3,11} = \ln\left\{\frac{l_{2\delta}}{d_{3,11}} + \left[1+\left(\frac{l_{2\delta}}{d_{3,11}}\right)^2\right]^{1/2}\right\} - \left[1+\left(\frac{d_{3,11}}{l_{2\delta}}\right)^2\right]^{1/2} + \left(\frac{d_{3,11}}{l_{2\delta}}\right)$$

EQUATION A.9 Mutual inductance between conductors 3 and 15

$$M_{3,15} = M_{15+3\delta}^{3,15} - M_{3\delta}^{3,15}$$

where:

$$M_{15+3\delta}^{3,15} = 2l_{15+3\delta}F_{15+3\delta}^{3,15}$$

$$M_{3\delta}^{3,15} = 2l_{3\delta}F_{3\delta}^{3,15}$$

$$F_{3+3\delta}^{3,15} = \ln\left\{\frac{l_{15+3\delta}}{d_{3,15}} + \left[1+\left(\frac{l_{15+3\delta}}{d_{3,15}}\right)^2\right]^{1/2}\right\} - \left[1+\left(\frac{d_{3,15}}{l_{15+3\delta}}\right)^2\right]^{1/2} + \left(\frac{d_{3,15}}{l_{15+3\delta}}\right)$$

$$F_{3\delta}^{3,15} = \ln\left\{\frac{l_{3\delta}}{d_{3,15}} + \left[1+\left(\frac{l_{3\delta}}{d_{3,15}}\right)^2\right]^{1/2}\right\} - \left[1+\left(\frac{d_{3,15}}{l_{3\delta}}\right)^2\right]^{1/2} + \left(\frac{d_{3,15}}{l_{3\delta}}\right)$$

$$\delta = w + s$$

EQUATION A.10 Mutual inductance between conductors 7 and 11

$$M_{7,11} = M_{11+\delta}^{7,11} - M_{\delta}^{7,11}$$

where:

$$M_{11+\delta}^{7,11} = 2l_{11+\delta}F_{11+\delta}^{7,11}$$

$$M_{\delta}^{7,11} = 2l_{\delta}F_{\delta}^{7,11}$$

$$F_{11+\delta}^{7,11} = \ln\left\{\frac{l_{11+\delta}}{d_{7,11}} + \left[1+\left(\frac{l_{11+\delta}}{d_{7,11}}\right)^2\right]^{1/2}\right\} - \left[1+\left(\frac{d_{7,11}}{l_{11+\delta}}\right)^2\right]^{1/2} + \left(\frac{d_{7,11}}{l_{11+\delta}}\right)$$

$$F_{\delta}^{7,11} = \ln\left\{\frac{l_{\delta}}{d_{7,11}} + \left[1+\left(\frac{l_{\delta}}{d_{7,11}}\right)^2\right]^{1/2}\right\} - \left[1+\left(\frac{d_{7,11}}{l_{\delta}}\right)^2\right]^{1/2} + \left(\frac{d_{7,11}}{l_{\delta}}\right)$$

© 2003 Microchip Technology Inc.

EQUATION A.11 Mutual inductance between conductors 7 and 15

$$M_{7,15} = M_{15+2\delta}^{7,15} - M_{2\delta}^{7,15}$$

where:

$$M_{15+2\delta}^{7,15} = 2l_{15+2\delta}F_{15+2\delta}^{7,15}$$

$$M_{2\delta}^{7,15} = 2l_{2\delta}F_{2\delta}^{7,15}$$

$$F_{15+2\delta}^{7,15} = \ln\left\{\frac{l_{15+2\delta}}{d_{7,15}} + \left[1+\left(\frac{l_{15+2\delta}}{d_{7,15}}\right)^2\right]^{1/2}\right\} - \left[1+\left(\frac{d_{7,15}}{l_{15+2\delta}}\right)^2\right]^{1/2} + \left(\frac{d_{7,15}}{l_{15+2\delta}}\right)$$

$$F_{2\delta}^{7,15} = \ln\left\{\frac{l_{2\delta}}{d_{7,15}} + \left[1+\left(\frac{l_{2\delta}}{d_{7,15}}\right)^2\right]^{1/2}\right\} - \left[1+\left(\frac{d_{7,15}}{l_{2\delta}}\right)^2\right]^{1/2} + \left(\frac{d_{7,15}}{l_{2\delta}}\right)$$

EQUATION A.12 Mutual inductance between conductors 11 and 15

$$M_{11,15} = M_{15+\delta}^{11,15} - M_{\delta}^{11,15}$$

where:

$$M_{15+\delta}^{11,15} = 2l_{15+\delta}F_{15+\delta}^{11,15}$$

$$M_{\delta}^{11,15} = 2l_{\delta}F_{\delta}^{11,15}$$

$$F_{15+\delta}^{11,15} = \ln\left\{\frac{l_{15+\delta}}{d_{11,15}} + \left[1+\left(\frac{l_{15+\delta}}{d_{11,15}}\right)^2\right]^{1/2}\right\} - \left[1+\left(\frac{d_{11,15}}{l_{15+\delta}}\right)^2\right]^{1/2} + \left(\frac{d_{11,15}}{l_{15+\delta}}\right)$$

$$F_{\delta}^{11,15} = \ln\left\{\frac{l_{\delta}}{d_{11,15}} + \left[1+\left(\frac{l_{\delta}}{d_{11,15}}\right)^2\right]^{1/2}\right\} - \left[1+\left(\frac{d_{11,15}}{l_{\delta}}\right)^2\right]^{1/2} + \left(\frac{d_{11,15}}{l_{\delta}}\right)$$

EQUATION A.13 Mutual inductance between conductors 2 and 6

$$M_{2,6} = M_{6+\delta}^{2,6} - M_{\delta}^{2,6}$$

where:

$$M_{6+\delta}^{2,6} = 2l_{6+\delta}F_{6+\delta}^{2,6}$$

$$M_{\delta}^{2,6} = 2l_{\delta}F_{\delta}^{2,6}$$

$$F_{6+\delta}^{2,6} = \ln\left\{\frac{l_{6+\delta}}{d_{2,6}} + \left[1+\left(\frac{l_{6+\delta}}{\delta_{2,6}}\right)^2\right]^{1/2}\right\} - \left[1+\left(\frac{\delta_{2,6}}{l_{6+\delta}}\right)^2\right]^{1/2} + \left(\frac{\delta_{2,6}}{l_{6+\delta}}\right)$$

$$F_{\delta}^{2,6} = \ln\left\{\frac{l_{\delta}}{\delta_{2,6}} + \left[1+\left(\frac{l_{\delta}}{d_{2,6}}\right)^2\right]^{1/2}\right\} - \left[1+\left(\frac{d_{2,6}}{l_{\delta}}\right)^2\right]^{1/2} + \left(\frac{d_{2,6}}{l_{\delta}}\right)$$

EQUATION A.14 Mutual inductance between conductors 2 and 10

$$M_{2,10} = M_{10+2\delta}^{2,10} - M_{2\delta}^{2,10}$$

where:

$$M_{10+2\delta}^{2,10} = 2l_{10+2\delta}F_{10+2\delta}^{2,10}$$

$$M_{2\delta}^{2,10} = 2l_{2\delta}F_{2\delta}^{2,10}$$

$$F_{10+2\delta}^{2,10} = \ln\left\{\frac{l_{10+2\delta}}{d_{2,10}} + \left[1+\left(\frac{l_{10+2\delta}}{d_{2,10}}\right)^2\right]^{1/2}\right\} - \left[1+\left(\frac{d_{2,10}}{l_{10+2\delta}}\right)^2\right]^{1/2} + \left(\frac{d_{2,10}}{l_{10+2\delta}}\right)$$

$$F_{2\delta}^{2,10} = \ln\left\{\frac{l_{2\delta}}{d_{2,10}} + \left[1+\left(\frac{l_{2\delta}}{d_{2,10}}\right)^2\right]^{1/2}\right\} - \left[1+\left(\frac{d_{2,10}}{l_{2\delta}}\right)^2\right]^{1/2} + \left(\frac{d_{2,10}}{l_{2\delta}}\right)$$

© 2003 Microchip Technology Inc.

EQUATION A.15 Mutual inductance between conductors 2 and 14

$$M_{2,\,14} = M_{14+3\delta}^{2,\,14} - M_{3\delta}^{2,\,14}$$

where:

$$M_{14+3\delta}^{2,\,14} = 2l_{14+3\delta}F_{14+3\delta}^{2,\,14}$$

$$M_{3\delta}^{2,\,14} = 2l_{3\delta}F_{3\delta}^{2,\,14}$$

$$F_{14+3\delta}^{2,\,14} = \ln\left\{\frac{l_{14+3\delta}}{d_{2,\,14}} + \left[1+\left(\frac{l_{14+3\delta}}{d_{2,\,14}}\right)^2\right]^{1/2}\right\} - \left[1+\left(\frac{d_{2,\,14}}{l_{14+3\delta}}\right)^2\right]^{1/2} + \left(\frac{d_{2,\,14}}{l_{14+3\delta}}\right)$$

$$F_{3\delta}^{2,\,14} = \ln\left\{\frac{l_{3\delta}}{d_{2,\,14}} + \left[1+\left(\frac{l_{3\delta}}{d_{2,\,14}}\right)^2\right]^{1/2}\right\} - \left[1+\left(\frac{d_{2,\,14}}{l_{3\delta}}\right)^2\right]^{1/2} + \left(\frac{d_{2,\,14}}{l_{3\delta}}\right)$$

EQUATION A.16 Mutual inductance between conductors 6 and 10

$$M_{6,\,10} = M_{10+\delta}^{6,\,10} - M_{\delta}^{6,\,10}$$

where:

$$M_{10+\delta}^{6,\,10} = 2l_{10+\delta}F_{10+\delta}^{6,\,10}$$

$$M_{\delta}^{6,\,10} = 2l_{\delta}F_{\delta}^{6,\,10}$$

$$F_{10+\delta}^{6,\,10} = \ln\left\{\frac{l_{10+\delta}}{d_{6,\,10}} + \left[1+\left(\frac{l_{10+\delta}}{d_{6,\,10}}\right)^2\right]^{1/2}\right\} - \left[1+\left(\frac{d_{6,\,10}}{l_{10+\delta}}\right)^2\right]^{1/2} + \left(\frac{d_{6,\,10}}{l_{10+\delta}}\right)$$

$$F_{\delta}^{6,\,10} = \ln\left\{\frac{l_{\delta}}{d_{6,\,10}} + \left[1+\left(\frac{l_{\delta}}{d_{6,\,10}}\right)^2\right]^{1/2}\right\} - \left[1+\left(\frac{d_{6,\,10}}{l_{\delta}}\right)^2\right]^{1/2} + \left(\frac{d_{6,\,10}}{l_{\delta}}\right)$$

EQUATION A.17 Mutual inductance between conductors 6 and 14

$$M_{6,\,14} = M_{14+2\delta}^{6,\,14} - M_{2\delta}^{6,\,14}$$

where:

$$M_{14+2\delta}^{6,\,14} = 2l_{14+2\delta}F_{14+2\delta}^{6,\,14}$$

$$M_{2\delta}^{6,\,14} = 2l_{2\delta}F_{2\delta}^{6,\,14}$$

$$F_{14+2\delta}^{6,\,14} = \ln\left\{\frac{l_{14+2\delta}}{d_{6,\,14}} + \left[1+\left(\frac{l_{14+2\delta}}{d_{6,\,14}}\right)^2\right]^{1/2}\right\} - \left[1+\left(\frac{d_{6,\,14}}{l_{14+2\delta}}\right)^2\right]^{1/2} + \left(\frac{d_{6,\,14}}{l_{14+2\delta}}\right)$$

$$F_{2\delta}^{6,\,14} = \ln\left\{\frac{l_{2\delta}}{d_{6,\,14}} + \left[1+\left(\frac{l_{2\delta}}{d_{6,\,14}}\right)^2\right]^{1/2}\right\} - \left[1+\left(\frac{d_{6,\,14}}{l_{2\delta}}\right)^2\right]^{1/2} + \left(\frac{d_{6,\,14}}{l_{2\delta}}\right)$$

EQUATION A.18 Mutual inductance between conductors 10 and 14

$$M_{10,\,14} = M_{14+\delta}^{10,\,14} - M_{\delta}^{10,\,14}$$

where:

$$M_{14+\delta}^{10,\,14} = 2l_{10+\delta}F_{10+\delta}^{10,\,14}$$

$$M_{\delta}^{10,\,14} = 2l_{\delta}F_{\delta}^{10,\,14}$$

$$F_{14+\delta}^{10,\,14} = \ln\left\{\frac{l_{14+\delta}}{d_{10,\,14}} + \left[1+\left(\frac{l_{14+\delta}}{d_{10,\,14}}\right)^2\right]^{1/2}\right\} - \left[1+\left(\frac{d_{10,\,14}}{l_{14+\delta}}\right)^2\right]^{1/2} + \left(\frac{d_{10,\,14}}{l_{14+\delta}}\right)$$

$$F_{\delta}^{10,\,14} = \ln\left\{\frac{l_{\delta}}{d_{10,\,14}} + \left[1+\left(\frac{l_{\delta}}{d_{10,\,14}}\right)^2\right]^{1/2}\right\} - \left[1+\left(\frac{d_{10,\,14}}{l_{\delta}}\right)^2\right]^{1/2} + \left(\frac{d_{10,\,14}}{l_{\delta}}\right)$$

© 2003 Microchip Technology Inc.

EQUATION A.19 Mutual inductance between conductors 4 and 8

$$M_{4,8} = M_{8+\delta}^{4,8} - M_{\delta}^{4,8}$$

where:

$$M_{8+\delta}^{4,8} = 2l_{8+\delta}F_{8+\delta}^{4,8}$$

$$M_{\delta}^{4,8} = 2l_{\delta}F_{\delta}^{4,8}$$

$$F_{8+\delta}^{4,8} = \ln\left\{\frac{l_{8+\delta}}{d_{4,8}} + \left[1 + \left(\frac{l_{8+\delta}}{d_{4,8}}\right)^2\right]^{1/2}\right\} - \left[1 + \left(\frac{d_{4,8}}{l_{8+\delta}}\right)^2\right]^{1/2} + \left(\frac{d_{4,8}}{l_{8+\delta}}\right)$$

$$F_{\delta}^{4,8} = \ln\left\{\frac{l_{\delta}}{d_{4,8}} + \left[1 + \left(\frac{l_{\delta}}{d_{4,8}}\right)^2\right]^{1/2}\right\} - \left[1 + \left(\frac{d_{4,8}}{l_{\delta}}\right)^2\right]^{1/2} + \left(\frac{d_{4,8}}{l_{\delta}}\right)$$

EQUATION A.20 Mutual inductance between conductors 4 and 12

$$M_{4,12} = M_{12+2\delta}^{4,12} - M_{2\delta}^{4,12}$$

where:

$$M_{12+2\delta}^{4,12} = 2l_{12+2\delta}F_{12+2\delta}^{4,12}$$

$$M_{2\delta}^{4,12} = 2l_{2\delta}F_{2\delta}^{4,12}$$

$$F_{12+2\delta}^{4,12} = \ln\left\{\frac{l_{12+2\delta}}{d_{4,12}} + \left[1 + \left(\frac{l_{12+2\delta}}{d_{4,12}}\right)^2\right]^{1/2}\right\} - \left[1 + \left(\frac{d_{4,12}}{l_{12+2\delta}}\right)^2\right]^{1/2} + \left(\frac{d_{4,12}}{l_{12+2\delta}}\right)$$

$$F_{2\delta}^{4,12} = \ln\left\{\frac{l_{2\delta}}{d_{4,12}} + \left[1 + \left(\frac{l_{2\delta}}{d_{4,12}}\right)^2\right]^{1/2}\right\} - \left[1 + \left(\frac{d_{4,12}}{l_{2\delta}}\right)^2\right]^{1/2} + \left(\frac{d_{4,12}}{l_{2\delta}}\right)$$

EQUATION A.21 Mutual inductance between conductors 4 and 16

$$M_{4,16} = M_{16+3\delta}^{4,16} - M_{3\delta}^{4,16}$$

where:

$$M_{16+3\delta}^{4,16} = 2l_{16+3\delta}F_{16+3\delta}^{4,16}$$

$$M_{3\delta}^{4,16} = 2l_{3\delta}F_{3\delta}^{4,16}$$

$$F_{16+3\delta}^{4,16} = \ln\left\{\frac{l_{16+3\delta}}{d_{4,16}} + \left[1 + \left(\frac{l_{16+3\delta}}{d_{4,16}}\right)^2\right]^{1/2}\right\} - \left[1 + \left(\frac{d_{4,16}}{l_{16+3\delta}}\right)^2\right]^{1/2} + \left(\frac{d_{4,16}}{l_{16+3\delta}}\right)$$

$$F_{3\delta}^{4,16} = \ln\left\{\frac{l_{3\delta}}{d_{4,16}} + \left[1 + \left(\frac{l_{3\delta}}{d_{4,16}}\right)^2\right]^{1/2}\right\} - \left[1 + \left(\frac{d_{4,16}}{l_{3\delta}}\right)^2\right]^{1/2} + \left(\frac{d_{4,16}}{l_{3\delta}}\right)$$

EQUATION A.22 Mutual inductance between conductors 8 and 12

$$M_{8,12} = M_{14+\delta}^{8,12} - M_{\delta}^{8,12}$$

where:

$$M_{12+\delta}^{8,12} = 2l_{10+\delta}F_{12+\delta}^{8,12}$$

$$M_{\delta}^{8,12} = 2l_{\delta}F_{\delta}^{8,12}$$

$$F_{12+\delta}^{8,12} = \ln\left\{\frac{l_{12+\delta}}{d_{8,12}} + \left[1 + \left(\frac{l_{12+\delta}}{d_{8,12}}\right)^2\right]^{1/2}\right\} - \left[1 + \left(\frac{d_{8,12}}{l_{12+\delta}}\right)^2\right]^{1/2} + \left(\frac{d_{8,12}}{l_{12+\delta}}\right)$$

$$F_{\delta}^{8,12} = \ln\left\{\frac{l_{\delta}}{d_{8,12}} + \left[1 + \left(\frac{l_{\delta}}{d_{8,12}}\right)^2\right]^{1/2}\right\} - \left[1 + \left(\frac{d_{8,12}}{l_{\delta}}\right)^2\right]^{1/2} + \left(\frac{d_{8,12}}{l_{\delta}}\right)$$

© 2003 Microchip Technology Inc.

EQUATION A.23 Mutual inductance between conductors 8 and 16

$$M_{8,16} = M_{14+2\delta}^{8,16} - M_{2\delta}^{8,16}$$

where:

$$M_{16+2\delta}^{8,16} = 2l_{16+2\delta}F_{16+2\delta}^{8,16}$$

$$M_{2\delta}^{8,16} = 2l_{2\delta}F_{2\delta}^{8,16}$$

$$F_{16+2\delta}^{8,16} = \ln\left\{\frac{l_{16+2\delta}}{d_{8,16}} + \left[1+\left(\frac{l_{16+2\delta}}{d_{8,16}}\right)^2\right]^{1/2}\right\} - \left[1+\left(\frac{d_{8,16}}{l_{16+2\delta}}\right)^2\right]^{1/2} + \left(\frac{d_{8,16}}{l_{16+2\delta}}\right)$$

$$F_{2\delta}^{8,16} = \ln\left\{\frac{l_{2\delta}}{d_{8,16}} + \left[1+\left(\frac{l_{2\delta}}{d_{8,16}}\right)^2\right]^{1/2}\right\} - \left[1+\left(\frac{d_{8,16}}{l_{2\delta}}\right)^2\right]^{1/2} + \left(\frac{d_{8,16}}{l_{2\delta}}\right)$$

EQUATION A.24 Mutual inductance between conductors 12 and 16

$$M_{12,16} = M_{14+\delta}^{12,16} - M_{\delta}^{12,16}$$

where:

$$M_{16+\delta}^{12,16} = 2l_{16+\delta}F_{16+\delta}^{12,16}$$

$$M_{\delta}^{12,16} = 2l_{\delta}F_{\delta}^{12,16}$$

$$F_{16+\delta}^{12,16} = \ln\left\{\frac{l_{16+\delta}}{d_{12,16}} + \left[1+\left(\frac{l_{16+\delta}}{d_{12,16}}\right)^2\right]^{1/2}\right\} - \left[1+\left(\frac{d_{12,16}}{l_{16+\delta}}\right)^2\right]^{1/2} + \left(\frac{d_{12,16}}{l_{16+\delta}}\right)$$

$$F_{\delta}^{12,16} = \ln\left\{\frac{l_{\delta}}{d_{12,16}} + \left[1+\left(\frac{l_{\delta}}{d_{12,16}}\right)^2\right]^{1/2}\right\} - \left[1+\left(\frac{d_{12,16}}{l_{\delta}}\right)^2\right]^{1/2} + \left(\frac{d_{12,16}}{l_{\delta}}\right)$$

EQUATION A.25 Mutual inductance between conductors 1 and 3

$$M_{1,3} = M_1^{1,3} = M_3^{1,3} = 2l_1F_1^{1,3}$$

where:

$$F_1^{1,3} = \ln\left\{\frac{l_1}{d_{1,3}} + \left[1+\left(\frac{l_1}{d_{1,3}}\right)^2\right]^{1/2}\right\} - \left[1+\left(\frac{d_{1,3}}{l_1}\right)^2\right]^{1/2} + \left(\frac{d_{1,3}}{l_1}\right)$$

EQUATION A.26 Mutual inductance between conductors 1 and 7

$$M_{1,7} = M_{7+\delta}^{1,7} - M_{\delta}^{1,7}$$

where:

$$M_{7+\delta}^{1,7} = 2l_{7+\delta}F_{7+\delta}^{1,7}$$

$$M_{\delta}^{1,7} = 2l_{\delta}F_{\delta}^{1,7}$$

$$F_{7+\delta}^{1,7} = \ln\left\{\frac{l_{7+\delta}}{d_{1,7}} + \left[1+\left(\frac{l_{7+\delta}}{d_{1,7}}\right)^2\right]^{1/2}\right\} - \left[1+\left(\frac{d_{1,7}}{l_{7+\delta}}\right)^2\right]^{1/2} + \left(\frac{d_{1,7}}{l_{7+\delta}}\right)$$

$$F_{\delta}^{1,7} = \ln\left\{\frac{l_{\delta}}{d_{1,7}} + \left[1+\left(\frac{l_{\delta}}{d_{1,7}}\right)^2\right]^{1/2}\right\} - \left[1+\left(\frac{d_{1,7}}{l_{\delta}}\right)^2\right]^{1/2} + \left(\frac{d_{1,7}}{l_{\delta}}\right)$$

© 2003 Microchip Technology Inc.

EQUATION A.27 Mutual inductance between conductors 1 and 11

$$M_{1,11} = M_{11+2\delta}^{1,11} - M_{2\delta}^{1,11}$$

where:

$$M_{11+2\delta}^{1,11} = 2l_{11+2\delta}F_{11+2\delta}^{1,11}$$

$$M_{2\delta}^{1,11} = 2l_{2\delta}F_{2\delta}^{1,11}$$

$$F_{11+2\delta}^{1,11} = \ln\left\{\frac{l_{11+2\delta}}{d_{1,11}} + \left[1+\left(\frac{l_{11+2\delta}}{d_{1,11}}\right)^2\right]^{1/2}\right\} - \left[1+\left(\frac{d_{1,11}}{l_{11+2\delta}}\right)^2\right]^{1/2} + \left(\frac{d_{1,11}}{l_{11+2\delta}}\right)$$

$$F_{2\delta}^{1,11} = \ln\left\{\frac{l_{2\delta}}{d_{1,11}} + \left[1+\left(\frac{l_{2\delta}}{d_{1,11}}\right)^2\right]^{1/2}\right\} - \left[1+\left(\frac{d_{1,11}}{l_{2\delta}}\right)^2\right]^{1/2} + \left(\frac{d_{1,11}}{l_{2\delta}}\right)$$

EQUATION A.28 Mutual inductance between conductors 1 and 15

$$M_{1,15} = M_{15+3\delta}^{1,15} - M_{3\delta}^{1,15}$$

where:

$$M_{15+3\delta}^{1,15} = 2l_{15+3\delta}F_{15+3\delta}^{1,15}$$

$$M_{3\delta}^{1,15} = 2l_{3\delta}F_{3\delta}^{1,15}$$

$$F_{15+3\delta}^{1,15} = \ln\left\{\frac{l_{15+3\delta}}{d_{1,15}} + \left[1+\left(\frac{l_{15+3\delta}}{d_{1,15}}\right)^2\right]^{1/2}\right\} - \left[1+\left(\frac{d_{1,15}}{l_{15+3\delta}}\right)^2\right]^{1/2} + \left(\frac{d_{1,15}}{l_{15+3\delta}}\right)$$

$$F_{3\delta}^{1,15} = \ln\left\{\frac{l_{3\delta}}{d_{1,15}} + \left[1+\left(\frac{l_{3\delta}}{d_{1,15}}\right)^2\right]^{1/2}\right\} - \left[1+\left(\frac{d_{1,15}}{l_{3\delta}}\right)^2\right]^{1/2} + \left(\frac{d_{1,15}}{l_{3\delta}}\right)$$

EQUATION A.29 Mutual inductance between conductors 5 and 3

$$M_{5,3} = \frac{1}{2}\left\{\left(M_5^{5,3} + M_3^{5,3}\right) - M_\delta^{5,3}\right\}$$

where:

$$M_5^{5,3} = 2l_5F_5^{5,3}$$

$$M_5^{5,3} = 2l_5F_5^{5,3}$$

$$M_\delta^{5,3} = 2l_\delta F_\delta^{5,3}$$

$$F_5^{5,3} = \ln\left\{\frac{l_5}{d_{5,3}} + \left[1+\left(\frac{l_5}{d_{5,3}}\right)^2\right]^{1/2}\right\} - \left[1+\left(\frac{d_{5,3}}{l_5}\right)^2\right]^{1/2} + \left(\frac{d_{5,3}}{l_5}\right)$$

$$F_3^{5,3} = \ln\left\{\frac{l_3}{d_{5,3}} + \left[1+\left(\frac{l_3}{d_{5,3}}\right)^2\right]^{1/2}\right\} - \left[1+\left(\frac{d_{5,3}}{l_3}\right)^2\right]^{1/2} + \left(\frac{d_{5,3}}{l_3}\right)$$

$$F_\delta^{5,3} = \ln\left\{\frac{l_\delta}{d_{5,3}} + \left[1+\left(\frac{l_\delta}{d_{5,3}}\right)^2\right]^{1/2}\right\} - \left[1+\left(\frac{d_{5,3}}{l_\delta}\right)^2\right]^{1/2} + \left(\frac{d_{5,3}}{l_\delta}\right)$$

EQUATION A.30 Mutual inductance between conductors 5 and 7

$$M_{5,7} = \frac{1}{2}\left\{\left(M_5^{5,7} + M_7^{5,7}\right) - M_\delta^{5,7}\right\}$$

where:

$$M_5^{5,7} = 2l_5F_5^{5,7}$$

$$M_7^{5,7} = 2l_7F_7^{5,7}$$

$$M_\delta^{5,7} = 2l_\delta F_\delta^{5,7}$$

$$F_5^{5,7} = \ln\left\{\frac{l_5}{d_{5,7}} + \left[1+\left(\frac{l_5}{d_{5,7}}\right)^2\right]^{1/2}\right\} - \left[1+\left(\frac{d_{5,7}}{l_5}\right)^2\right]^{1/2} + \left(\frac{d_{5,7}}{l_5}\right)$$

$$F_7^{5,7} = \ln\left\{\frac{l_7}{d_{5,7}} + \left[1+\left(\frac{l_7}{d_{5,7}}\right)^2\right]^{1/2}\right\} - \left[1+\left(\frac{d_{5,7}}{l_7}\right)^2\right]^{1/2} + \left(\frac{d_{5,7}}{l_7}\right)$$

$$F_\delta^{5,7} = \ln\left\{\frac{l_\delta}{d_{5,7}} + \left[1+\left(\frac{l_\delta}{d_{5,7}}\right)^2\right]^{1/2}\right\} - \left[1+\left(\frac{d_{5,7}}{l_\delta}\right)^2\right]^{1/2} + \left(\frac{d_{5,7}}{l_\delta}\right)$$

© 2003 Microchip Technology Inc.

EQUATION A.31 Mutual inductance between conductors 5 and 11

$$M_{5,11} = \frac{1}{2}\left\{\left(M_{11+2\delta}^{5,11} + M_{11+\delta}^{5,11}\right) - \left(M_{2\delta}^{5,11} + M_{\delta}^{5,11}\right)\right\}$$

where:

$$M_{11+2\delta}^{5,11} = 2l_{11+2\delta}F_{11+2\delta}^{5,11}$$

$$M_{11+\delta}^{5,11} = 2l_{11+\delta}F_{11+\delta}^{5,11}$$

$$M_{2\delta}^{5,11} = 2l_{2\delta}F_{2\delta}^{5,11}$$

$$M_{\delta}^{5,11} = 2l_{\delta}F_{\delta}^{5,11}$$

$$F_{11+2\delta}^{5,11} = \ln\left\{\frac{l_{11+2\delta}}{d_{5,11}} + \left[1 + \left(\frac{l_{11+2\delta}}{d_{5,11}}\right)^2\right]^{1/2}\right\} - \left[1 + \left(\frac{d_{5,11}}{l_{11+2\delta}}\right)^2\right]^{1/2} + \left(\frac{d_{5,11}}{l_{11+2\delta}}\right)$$

$$F_{11+\delta}^{5,11} = \ln\left\{\frac{l_{11+\delta}}{d_{5,11}} + \left[1 + \left(\frac{l_{11+\delta}}{d_{5,11}}\right)^2\right]^{1/2}\right\} - \left[1 + \left(\frac{d_{5,11}}{l_{11+\delta}}\right)^2\right]^{1/2} + \left(\frac{d_{5,11}}{l_{11+\delta}}\right)$$

$$F_{2\delta}^{5,11} = \ln\left\{\frac{2\delta}{d_{5,11}} + \left[1 + \left(\frac{2\delta}{d_{5,11}}\right)^2\right]^{1/2}\right\} - \left[1 + \left(\frac{d_{5,11}}{l_{2\delta}}\right)^2\right]^{1/2} + \left(\frac{d_{5,11}}{l_{2\delta}}\right)$$

$$F_{\delta}^{5,11} = \ln\left\{\frac{\delta}{d_{5,11}} + \left[1 + \left(\frac{\delta}{d_{5,11}}\right)^2\right]^{1/2}\right\} - \left[1 + \left(\frac{d_{5,11}}{\delta}\right)^2\right]^{1/2} + \left(\frac{d_{5,11}}{\delta}\right)$$

EQUATION A.32 Mutual inductance between conductors 2 and 4

$$M_{2,4} = \frac{1}{2}\left\{\left(M_{2}^{2,4} + M_{4}^{2,4}\right) - M_{\delta}^{2,4}\right\}$$

where:

$$M_{2}^{2,4} = 2l_{2}F_{2}^{2,4} \qquad M_{4}^{2,4} = 2l_{4}F_{4}^{2,4}$$

$$M_{\delta}^{2,4} = 2l_{\delta}F_{\delta}^{2,4}$$

$$F_{2}^{2,4} = \ln\left\{\frac{l_{2}}{d_{2,4}} + \left[1 + \left(\frac{l_{2}}{d_{2,4}}\right)^2\right]^{1/2}\right\} - \left[1 + \left(\frac{d_{2,4}}{l_{2}}\right)^2\right]^{1/2} + \left(\frac{d_{2,4}}{l_{2}}\right)$$

$$F_{4}^{2,4} = \ln\left\{\frac{l_{4}}{d_{2,4}} + \left[1 + \left(\frac{l_{4}}{d_{2,4}}\right)^2\right]^{1/2}\right\} - \left[1 + \left(\frac{d_{2,4}}{l_{4}}\right)^2\right]^{1/2} + \left(\frac{d_{2,4}}{l_{4}}\right)$$

$$F_{\delta}^{2,4} = \ln\left\{\frac{l_{\delta}}{d_{2,4}} + \left[1 + \left(\frac{l_{\delta}}{d_{2,4}}\right)^2\right]^{1/2}\right\} - \left[1 + \left(\frac{d_{2,4}}{l_{\delta}}\right)^2\right]^{1/2} + \left(\frac{d_{2,4}}{l_{\delta}}\right)$$

© 2003 Microchip Technology Inc.

EQUATION A.33 Mutual inductance between conductors 5 and 15

$$M_{5,15} = \frac{1}{2}\left\{\left(M^{5,15}_{15+3\delta} + M^{5,15}_{15+2\delta}\right) - \left(M^{5,15}_{3\delta} + M^{5,15}_{2\delta}\right)\right\}$$

where:

$$M^{5,15}_{15+3\delta} = 2l_{15+3\delta}F^{5,15}_{15+3\delta}$$

$$M^{5,15}_{15+2\delta} = 2l_{15+2\delta}F^{5,15}_{15+2\delta}$$

$$M^{5,15}_{3\delta} = 2l_{3\delta}F^{5,15}_{3\delta} \quad , \quad M^{5,15}_{2\delta} = 2l_{2\delta}F^{5,15}_{\delta}$$

$$F^{5,15}_{15+3\delta} = \ln\left\{\frac{l_{15+3\delta}}{d_{5,15}} + \left[1+\left(\frac{l_{15+3\delta}}{d_{5,15}}\right)^2\right]^{1/2}\right\} - \left[1+\left(\frac{d_{5,15}}{l_{15+3\delta}}\right)^2\right]^{1/2} + \left(\frac{d_{5,15}}{l_{15+3\delta}}\right)$$

$$F^{5,15}_{15+2\delta} = \ln\left\{\frac{l_{15+2\delta}}{d_{5,15}} + \left[1+\left(\frac{l_{15+2\delta}}{d_{5,15}}\right)^2\right]^{1/2}\right\} - \left[1+\left(\frac{d_{5,15}}{l_{15+2\delta}}\right)^2\right]^{1/2} + \left(\frac{d_{5,15}}{l_{15+2\delta}}\right)$$

$$F^{5,15}_{2\delta} = \ln\left\{\frac{2\delta}{d_{5,15}} + \left[1+\left(\frac{2\delta}{d_{5,15}}\right)^2\right]^{1/2}\right\} - \left[1+\left(\frac{d_{5,15}}{l_{2\delta}}\right)^2\right]^{1/2} + \left(\frac{d_{5,15}}{l_{2\delta}}\right)$$

$$F^{5,15}_{\delta} = \ln\left\{\frac{\delta}{d_{5,15}} + \left[1+\left(\frac{\delta}{d_{5,15}}\right)^2\right]^{1/2}\right\} - \left[1+\left(\frac{d_{5,15}}{\delta}\right)^2\right]^{1/2} + \left(\frac{d_{5,15}}{\delta}\right)$$

EQUATION A.34 Mutual inductance between conductors 9 and 7

$$M_{9,7} = \frac{1}{2}\left\{\left(M^{9,7}_{9} + M^{9,7}_{7}\right) - M^{9,7}_{\delta}\right\}$$

where:

$$M^{9,7}_{9} = 2l_9F^{9,7}_{9} \qquad M^{9,7}_{7} = 2l_7F^{9,7}_{7}$$

$$M^{9,7}_{\delta} = 2l_{\delta}F^{9,7}_{\delta}$$

$$F^{9,7}_{9} = \ln\left\{\frac{l_9}{d_{9,7}} + \left[1+\left(\frac{l_9}{d_{9,7}}\right)^2\right]^{1/2}\right\} - \left[1+\left(\frac{d_{9,7}}{l_9}\right)^2\right]^{1/2} + \left(\frac{d_{9,7}}{l_9}\right)$$

$$F^{9,7}_{7} = \ln\left\{\frac{l_7}{d_{9,7}} + \left[1+\left(\frac{l_7}{d_{9,7}}\right)^2\right]^{1/2}\right\} - \left[1+\left(\frac{d_{9,7}}{l_7}\right)^2\right]^{1/2} + \left(\frac{d_{9,7}}{l_7}\right)$$

$$F^{9,7}_{\delta} = \ln\left\{\frac{l_{\delta}}{d_{9,7}} + \left[1+\left(\frac{l_{\delta}}{d_{9,7}}\right)^2\right]^{1/2}\right\} - \left[1+\left(\frac{d_{9,7}}{l_{\delta}}\right)^2\right]^{1/2} + \left(\frac{d_{9,7}}{l_{\delta}}\right)$$

EQUATION A.35 Mutual inductance between conductors 9 and 3

$$M_{9,3} = \frac{1}{2}\left\{\left(M^{9,3}_{9+2\delta} + M^{9,3}_{9+\delta}\right) - \left(M^{9,3}_{2\delta} + M^{9,3}_{\delta}\right)\right\}$$

where:

$$M^{9,3}_{9+2\delta} = 2l_{9+2\delta}F^{9,3}_{9+2\delta} \quad , \quad M^{9,3}_{9+\delta} = 2l_{9+\delta}F^{9,3}_{9+\delta}$$

$$M^{9,3}_{2\delta} = 2l_{2\delta}F^{9,3}_{2\delta} \quad , \quad M^{9,3}_{\delta} = 2l_{\delta}F^{9,3}_{\delta}$$

$$F^{9,3}_{9+2\delta} = \ln\left\{\frac{l_{9+2\delta}}{d_{9,3}} + \left[1+\left(\frac{l_{9+2\delta}}{d_{9,3}}\right)^2\right]^{1/2}\right\} - \left[1+\left(\frac{d_{9,3}}{l_{9+2\delta}}\right)^2\right]^{1/2} + \left(\frac{d_{9,3}}{l_{9+2\delta}}\right)$$

$$F^{9,3}_{9+\delta} = \ln\left\{\frac{l_{9+\delta}}{d_{9,3}} + \left[1+\left(\frac{l_{9+\delta}}{d_{9,3}}\right)^2\right]^{1/2}\right\} - \left[1+\left(\frac{d_{9,3}}{l_{9+\delta}}\right)^2\right]^{1/2} + \left(\frac{d_{9,3}}{l_{9+\delta}}\right)$$

$$F^{9,3}_{2\delta} = \ln\left\{\frac{2\delta}{d_{9,3}} + \left[1+\left(\frac{2\delta}{d_{9,3}}\right)^2\right]^{1/2}\right\} - \left[1+\left(\frac{d_{9,3}}{l_{2\delta}}\right)^2\right]^{1/2} + \left(\frac{d_{9,3}}{l_{2\delta}}\right)$$

$$F^{9,3}_{\delta} = \ln\left\{\frac{\delta}{d_{9,3}} + \left[1+\left(\frac{\delta}{d_{9,3}}\right)^2\right]^{1/2}\right\} - \left[1+\left(\frac{d_{9,3}}{\delta}\right)^2\right]^{1/2} + \left(\frac{d_{9,3}}{\delta}\right)$$

EQUATION A.36 Mutual inductance between conductors 9 and 11

$$M_{9,11} = \frac{1}{2}\left\{\left(M^{9,11}_{9} + M^{9,11}_{11}\right) - M^{9,11}_{\delta}\right\}$$

where:

$$M^{9,11}_{9} = 2l_9F^{9,11}_{9} \qquad M^{9,11}_{7} = 2l_7F^{9,11}_{7}$$

$$M^{9,11}_{\delta} = 2l_{\delta}F^{9,11}_{\delta}$$

$$F^{9,11}_{9} = \ln\left\{\frac{l_9}{d_{9,11}} + \left[1+\left(\frac{l_9}{d_{9,11}}\right)^2\right]^{1/2}\right\} - \left[1+\left(\frac{d_{9,11}}{l_9}\right)^2\right]^{1/2} + \left(\frac{d_{9,11}}{l_9}\right)$$

$$F^{9,11}_{11} = \ln\left\{\frac{l_{11}}{d_{9,11}} + \left[1+\left(\frac{l_{11}}{d_{9,11}}\right)^2\right]^{1/2}\right\} - \left[1+\left(\frac{d_{9,11}}{l_{11}}\right)^2\right]^{1/2} + \left(\frac{d_{9,11}}{l_{11}}\right)$$

$$F^{9,11}_{\delta} = \ln\left\{\frac{l_{\delta}}{d_{9,11}} + \left[1+\left(\frac{l_{\delta}}{d_{9,11}}\right)^2\right]^{1/2}\right\} - \left[1+\left(\frac{d_{9,11}}{l_{\delta}}\right)^2\right]^{1/2} + \left(\frac{d_{9,11}}{l_{\delta}}\right)$$

© 2003 Microchip Technology Inc.

EQUATION A.37 Mutual inductance between conductors 9 and 15

$$M_{9,15} = \frac{1}{2}\left\{\left(M_{15+2\delta}^{9,15} + M_{15+\delta}^{9,15}\right) - \left(M_{2\delta}^{9,15} + M_{\delta}^{9,15}\right)\right\}$$

where:

$$M_{15+2\delta}^{9,15} = 2l_{15+2\delta}F_{15+2\delta}^{9,15} \quad , \quad M_{15+\delta}^{9,15} = 2l_{15+\delta}F_{15+\delta}^{9,15}$$

$$M_{2\delta}^{9,15} = 2l_{2\delta}F_{2\delta}^{9,15} \quad , \quad M_{\delta}^{9,15} = 2l_{\delta}F_{\delta}^{9,15}$$

$$F_{9+2\delta}^{9,15} = \ln\left\{\frac{l_{9+2\delta}}{d_{9,15}} + \left[1+\left(\frac{l_{9+2\delta}}{d_{9,15}}\right)^2\right]^{1/2}\right\} - \left[1+\left(\frac{d_{9,15}}{l_{9+2\delta}}\right)^2\right]^{1/2} + \left(\frac{d_{9,15}}{l_{9+2\delta}}\right)$$

$$F_{9+\delta}^{9,15} = \ln\left\{\frac{l_{9+\delta}}{d_{9,15}} + \left[1+\left(\frac{l_{9+\delta}}{d_{9,15}}\right)^2\right]^{1/2}\right\} - \left[1+\left(\frac{d_{9,15}}{l_{9+\delta}}\right)^2\right]^{1/2} + \left(\frac{d_{9,15}}{l_{9+\delta}}\right)$$

$$F_{2\delta}^{9,15} = \ln\left\{\frac{2\delta}{d_{9,15}} + \left[1+\left(\frac{2\delta}{d_{9,15}}\right)^2\right]^{1/2}\right\} - \left[1+\left(\frac{d_{9,15}}{l_{2\delta}}\right)^2\right]^{1/2} + \left(\frac{d_{9,15}}{l_{2\delta}}\right)$$

$$F_{\delta}^{9,15} = \ln\left\{\frac{\delta}{d_{9,15}} + \left[1+\left(\frac{\delta}{d_{9,15}}\right)^2\right]^{1/2}\right\} - \left[1+\left(\frac{d_{9,15}}{\delta}\right)^2\right]^{1/2} + \left(\frac{d_{9,15}}{\delta}\right)$$

EQUATION A.38 Mutual inductance between conductors 13 and 15

$$M_{13,15} = \frac{1}{2}\left\{\left(M_{13}^{13,15} + M_{15}^{13,15}\right) - M_{\delta}^{13,15}\right\}$$

where:

$$M_{13}^{13,15} = 2l_{13}F_{13}^{13,15} \quad M_{15}^{13,15} = 2l_{15}F_{15}^{13,15}$$

$$M_{\delta}^{13,15} = 2l_{\delta}F_{\delta}^{13,15}$$

$$F_{13}^{13,15} = \ln\left\{\frac{l_{13}}{d_{13,15}} + \left[1+\left(\frac{l_{13}}{d_{13,15}}\right)^2\right]^{1/2}\right\} - \left[1+\left(\frac{d_{13,15}}{l_{13}}\right)^2\right]^{1/2} + \left(\frac{d_{13,15}}{l_{13}}\right)$$

$$F_{13}^{13,15} = \ln\left\{\frac{l_{15}}{d_{13,15}} + \left[1+\left(\frac{l_{15}}{d_{13,15}}\right)^2\right]^{1/2}\right\} - \left[1+\left(\frac{d_{13,15}}{l_{15}}\right)^2\right]^{1/2} + \left(\frac{d_{13,15}}{l_{15}}\right)$$

$$F_{\delta}^{13,15} = \ln\left\{\frac{l_{\delta}}{d_{13,15}} + \left[1+\left(\frac{l_{\delta}}{d_{13,15}}\right)^2\right]^{1/2}\right\} - \left[1+\left(\frac{d_{13,15}}{l_{\delta}}\right)^2\right]^{1/2} + \left(\frac{d_{13,15}}{l_{\delta}}\right)$$

EQUATION A.39 Mutual inductance between conductors 13 and 11

$$M_{13,11} = \frac{1}{2}\left\{\left(M_{13}^{13,11} + M_{11}^{13,11}\right) - M_{\delta}^{13,11}\right\}$$

where:

$$M_{13}^{13,11} = 2l_{13}F_{13}^{13,11} \quad M_{11}^{13,11} = 2l_{11}F_{11}^{13,11}$$

$$M_{\delta}^{13,11} = 2l_{\delta}F_{\delta}^{13,11}$$

$$F_{13}^{13,11} = \ln\left\{\frac{l_{13}}{d_{13,11}} + \left[1+\left(\frac{l_{13}}{d_{13,11}}\right)^2\right]^{1/2}\right\} - \left[1+\left(\frac{d_{13,11}}{l_{13}}\right)^2\right]^{1/2} + \left(\frac{d_{13,11}}{l_{13}}\right)$$

$$F_{11}^{13,11} = \ln\left\{\frac{l_{11}}{d_{13,11}} + \left[1+\left(\frac{l_{11}}{d_{13,11}}\right)^2\right]^{1/2}\right\} - \left[1+\left(\frac{d_{13,11}}{l_{11}}\right)^2\right]^{1/2} + \left(\frac{d_{13,11}}{l_{11}}\right)$$

$$F_{\delta}^{13,11} = \ln\left\{\frac{l_{\delta}}{d_{13,11}} + \left[1+\left(\frac{l_{\delta}}{d_{13,11}}\right)^2\right]^{1/2}\right\} - \left[1+\left(\frac{d_{13,11}}{l_{\delta}}\right)^2\right]^{1/2} + \left(\frac{d_{13,11}}{l_{\delta}}\right)$$

EQUATION A.40 Mutual inductance between conductors 13 and 7

$$M_{13,7} = \frac{1}{2}\left\{\left(M_{13+2\delta}^{13,7} + M_{13+\delta}^{13,7}\right) - \left(M_{2\delta}^{13,7} + M_{\delta}^{13,7}\right)\right\}$$

where:

$$M_{13+2\delta}^{13,7} = 2l_{13+2\delta}F_{13+2\delta}^{13,7} \quad , \quad M_{13+\delta}^{13,7} = 2l_{13+\delta}F_{13+\delta}^{13,7}$$

$$M_{2\delta}^{13,7} = 2l_{2\delta}F_{2\delta}^{13,7} \quad , \quad M_{\delta}^{13,7} = 2l_{\delta}F_{\delta}^{13,7}$$

$$F_{13+2\delta}^{13,7} = \ln\left\{\frac{l_{13+2\delta}}{d_{13,7}} + \left[1+\left(\frac{l_{13+2\delta}}{d_{13,7}}\right)^2\right]^{1/2}\right\} - \left[1+\left(\frac{d_{13,7}}{l_{13+2\delta}}\right)^2\right]^{1/2} + \left(\frac{d_{13,7}}{l_{13+2\delta}}\right)$$

$$F_{13+\delta}^{13,7} = \ln\left\{\frac{l_{13+\delta}}{d_{13,7}} + \left[1+\left(\frac{l_{13+\delta}}{d_{13,7}}\right)^2\right]^{1/2}\right\} - \left[1+\left(\frac{d_{13,7}}{l_{13+\delta}}\right)^2\right]^{1/2} + \left(\frac{d_{13,7}}{l_{13+\delta}}\right)$$

$$F_{2\delta}^{13,7} = \ln\left\{\frac{2\delta}{d_{13,7}} + \left[1+\left(\frac{2\delta}{d_{13,7}}\right)^2\right]^{1/2}\right\} - \left[1+\left(\frac{d_{13,7}}{l_{2\delta}}\right)^2\right]^{1/2} + \left(\frac{d_{13,7}}{l_{2\delta}}\right)$$

$$F_{\delta}^{13,7} = \ln\left\{\frac{\delta}{d_{13,7}} + \left[1+\left(\frac{\delta}{d_{13,7}}\right)^2\right]^{1/2}\right\} - \left[1+\left(\frac{d_{13,7}}{\delta}\right)^2\right]^{1/2} + \left(\frac{d_{13,7}}{\delta}\right)$$

© 2003 Microchip Technology Inc.

EQUATION A.41 Mutual inductance between conductors 13 and 3

$$M_{13,3} = \frac{1}{2}\left\{\left(M_{13+3\delta}^{13,3} + M_{13+2\delta}^{13,3}\right) - \left(M_{3\delta}^{13,3} + M_{2\delta}^{13,3}\right)\right\}$$

where:

$$M_{13+3\delta}^{13,3} = 2l_{13+3\delta}F_{13+3\delta}^{13,3}$$

$$M_{13+2\delta}^{13,3} = 2l_{13+2\delta}F_{13+2\delta}^{13,3}$$

$$M_{3\delta}^{13,3} = 2l_{3\delta}F_{3\delta}^{13,3} \quad , \quad M_{2\delta}^{13,3} = 2l_{2\delta}F_{\delta}^{13,3}$$

$$F_{13+3\delta}^{13,3} = \ln\left\{\frac{l_{13+3\delta}}{d_{13,3}} + \left[1+\left(\frac{l_{13+3\delta}}{d_{13,3}}\right)^2\right]^{1/2}\right\} - \left[1+\left(\frac{d_{13,3}}{l_{13+3\delta}}\right)^2\right]^{1/2} + \left(\frac{d_{13,3}}{l_{13+3\delta}}\right)$$

$$F_{13+2\delta}^{13,3} = \ln\left\{\frac{l_{13+2\delta}}{d_{13,3}} + \left[1+\left(\frac{l_{13+2\delta}}{d_{13,3}}\right)^2\right]^{1/2}\right\} - \left[1+\left(\frac{d_{13,3}}{l_{13+2\delta}}\right)^2\right]^{1/2} + \left(\frac{d_{13,3}}{l_{13+2\delta}}\right)$$

$$F_{2\delta}^{13,3} = \ln\left\{\frac{2\delta}{d_{13,3}} + \left[1+\left(\frac{2\delta}{d_{13,3}}\right)^2\right]^{1/2}\right\} - \left[1+\left(\frac{d_{13,3}}{l_{2\delta}}\right)^2\right]^{1/2} + \left(\frac{d_{13,3}}{l_{2\delta}}\right)$$

$$F_{\delta}^{13,3} = \ln\left\{\frac{\delta}{d_{13,3}} + \left[1+\left(\frac{\delta}{d_{13,3}}\right)^2\right]^{1/2}\right\} - \left[1+\left(\frac{d_{13,3}}{\delta}\right)^2\right]^{1/2} + \left(\frac{d_{13,3}}{\delta}\right)$$

EQUATION A.42 Mutual inductance between conductors 6 and 4

$$M_{6,4} = \frac{1}{2}\left\{\left(M_{6}^{6,4} + M_{4}^{6,4}\right) - M_{\delta}^{6,4}\right\}$$

where:

$$M_{6}^{6,4} = 2l_{6}F_{6}^{6,4}$$

$$M_{4}^{6,4} = 2l_{4}F_{4}^{6,4}$$

$$M_{\delta}^{6,4} = 2l_{\delta}F_{\delta}^{6,4}$$

$$F_{6}^{6,4} = \ln\left\{\frac{l_6}{d_{6,4}} + \left[1+\left(\frac{l_6}{d_{6,4}}\right)^2\right]^{1/2}\right\} - \left[1+\left(\frac{d_{6,4}}{l_6}\right)^2\right]^{1/2} + \left(\frac{d_{6,4}}{l_6}\right)$$

$$F_{4}^{6,4} = \ln\left\{\frac{l_4}{d_{6,4}} + \left[1+\left(\frac{l_4}{d_{6,4}}\right)^2\right]^{1/2}\right\} - \left[1+\left(\frac{d_{6,4}}{l_4}\right)^2\right]^{1/2} + \left(\frac{d_{6,4}}{l_4}\right)$$

$$F_{\delta}^{6,4} = \ln\left\{\frac{l_\delta}{d_{6,4}} + \left[1+\left(\frac{l_\delta}{d_{6,4}}\right)^2\right]^{1/2}\right\} - \left[1+\left(\frac{d_{6,4}}{l_\delta}\right)^2\right]^{1/2} + \left(\frac{d_{6,4}}{l_\delta}\right)$$

EQUATION A.43 Mutual inductance between conductors 2 and 8

$$M_{2,8} = \frac{1}{2}\left\{\left(M_{8+2\delta}^{2,8} + M_{8+\delta}^{2,8}\right) - \left(M_{2\delta}^{2,8} + M_{\delta}^{2,8}\right)\right\}$$

where:

$$M_{8+2\delta}^{2,8} = 2l_{8+2\delta}F_{8+2\delta}^{2,8} \quad , \quad M_{8+\delta}^{2,8} = 2l_{8+\delta}F_{8+\delta}^{2,8}$$

$$M_{2\delta}^{2,8} = 2l_{2\delta}F_{2\delta}^{2,8} \quad , \quad M_{\delta}^{2,8} = 2l_{\delta}F_{\delta}^{2,8}$$

$$F_{8+2\delta}^{2,8} = \ln\left\{\frac{l_{8+2\delta}}{d_{2,8}} + \left[1+\left(\frac{l_{8+2\delta}}{d_{2,8}}\right)^2\right]^{1/2}\right\} - \left[1+\left(\frac{d_{2,8}}{l_{8+2\delta}}\right)^2\right]^{1/2} + \left(\frac{d_{2,8}}{l_{8+2\delta}}\right)$$

$$F_{8+\delta}^{2,8} = \ln\left\{\frac{l_{8+\delta}}{d_{2,8}} + \left[1+\left(\frac{l_{8+\delta}}{d_{2,8}}\right)^2\right]^{1/2}\right\} - \left[1+\left(\frac{d_{2,8}}{l_{8+\delta}}\right)^2\right]^{1/2} + \left(\frac{d_{2,8}}{l_{8+\delta}}\right)$$

$$F_{2\delta}^{2,8} = \ln\left\{\frac{2\delta}{d_{2,8}} + \left[1+\left(\frac{2\delta}{d_{2,8}}\right)^2\right]^{1/2}\right\} - \left[1+\left(\frac{d_{2,8}}{l_{2\delta}}\right)^2\right]^{1/2} + \left(\frac{d_{2,8}}{l_{2\delta}}\right)$$

$$F_{\delta}^{2,8} = \ln\left\{\frac{\delta}{d_{2,8}} + \left[1+\left(\frac{\delta}{d_{2,8}}\right)^2\right]^{1/2}\right\} - \left[1+\left(\frac{d_{2,8}}{\delta}\right)^2\right]^{1/2} + \left(\frac{d_{2,8}}{\delta}\right)$$

EQUATION A.44 Mutual inductance between conductors 10 and 8

$$M_{10,8} = \frac{1}{2}\left\{\left(M_{10}^{10,8} + M_{8}^{10,8}\right) - M_{\delta}^{10,8}\right\}$$

where:

$$M_{6}^{10,8} = 2l_{6}F_{6}^{10,8} \quad , \quad M_{8}^{10,8} = 2l_{8}F_{8}^{10,8}$$

$$M_{\delta}^{10,8} = 2l_{\delta}F_{\delta}^{10,8}$$

$$F_{6}^{10,8} = \ln\left\{\frac{l_6}{d_{10,8}} + \left[1+\left(\frac{l_6}{d_{10,8}}\right)^2\right]^{1/2}\right\} - \left[1+\left(\frac{d_{10,8}}{l_6}\right)^2\right]^{1/2} + \left(\frac{d_{10,8}}{l_6}\right)$$

$$F_{8}^{10,8} = \ln\left\{\frac{l_8}{d_{10,8}} + \left[1+\left(\frac{l_8}{d_{10,8}}\right)^2\right]^{1/2}\right\} - \left[1+\left(\frac{d_{10,8}}{l_8}\right)^2\right]^{1/2} + \left(\frac{d_{10,8}}{l_8}\right)$$

$$F_{\delta}^{10,8} = \ln\left\{\frac{l_\delta}{d_{10,8}} + \left[1+\left(\frac{l_\delta}{d_{10,8}}\right)^2\right]^{1/2}\right\} - \left[1+\left(\frac{d_{10,8}}{l_\delta}\right)^2\right]^{1/2} + \left(\frac{d_{10,8}}{l_\delta}\right)$$

© 2003 Microchip Technology Inc.

EQUATION A.45 Mutual inductance between conductors 2 and 12

$$M_{2,12} = \frac{1}{2}\left\{\left(M^{2,12}_{12+3\delta} + M^{2,12}_{12+2\delta}\right) - \left(M^{2,12}_{3\delta} + M^{2,12}_{2\delta}\right)\right\}$$

where:

$$M^{2,12}_{12+3\delta} = 2l_{12+3\delta}F^{2,12}_{12+3\delta}$$

$$M^{2,12}_{12+2\delta} = 2l_{15+2\delta}F^{2,12}_{12+2\delta}$$

$$M^{2,12}_{3\delta} = 2l_{3\delta}F^{2,12}_{3\delta} \quad , \quad M^{2,12}_{2\delta} = 2l_{2\delta}F^{2,12}_{2\delta}$$

$$F^{2,12}_{12+3\delta} = \ln\left\{\frac{l_{12+3\delta}}{d_{2,12}} + \left[1+\left(\frac{l_{12+3\delta}}{d_{2,12}}\right)^2\right]^{1/2}\right\} - \left[1+\left(\frac{d_{2,12}}{l_{12+3\delta}}\right)^2\right]^{1/2} + \left(\frac{d_{2,12}}{l_{12+3\delta}}\right)$$

$$F^{2,12}_{12+2\delta} = \ln\left\{\frac{l_{12+2\delta}}{d_{2,12}} + \left[1+\left(\frac{l_{12+2\delta}}{d_{2,12}}\right)^2\right]^{1/2}\right\} - \left[1+\left(\frac{d_{2,12}}{l_{12+2\delta}}\right)^2\right]^{1/2} + \left(\frac{d_{2,12}}{l_{12+2\delta}}\right)$$

$$F^{2,12}_{2\delta} = \ln\left\{\frac{2\delta}{d_{2,12}} + \left[1+\left(\frac{2\delta}{d_{2,12}}\right)^2\right]^{1/2}\right\} - \left[1+\left(\frac{d_{2,12}}{l_{2\delta}}\right)^2\right]^{1/2} + \left(\frac{d_{2,12}}{l_{2\delta}}\right)$$

$$F^{2,12}_{2\delta} = \ln\left\{\frac{\delta}{d_{2,12}} + \left[1+\left(\frac{\delta}{d_{2,12}}\right)^2\right]^{1/2}\right\} - \left[1+\left(\frac{d_{2,12}}{\delta}\right)^2\right]^{1/2} + \left(\frac{d_{2,12}}{\delta}\right)$$

EQUATION A.46 Mutual inductance between conductors 6 and 8

$$M_{6,8} = \frac{1}{2}\left\{\left(M^{6,8}_{6} + M^{6,8}_{4}\right) - M^{6,8}_{\delta}\right\}$$

where:

$$M^{6,8}_{6} = 2l_6F^{6,8}_{6}$$

$$M^{6,8}_{8} = 2l_8F^{6,8}_{8}$$

$$M^{6,8}_{\delta} = 2l_\delta F^{6,8}_{\delta}$$

$$F^{6,8}_{6} = \ln\left\{\frac{l_6}{d_{6,8}} + \left[1+\left(\frac{l_6}{d_{6,8}}\right)^2\right]^{1/2}\right\} - \left[1+\left(\frac{d_{6,8}}{l_6}\right)^2\right]^{1/2} + \left(\frac{d_{6,8}}{l_6}\right)$$

$$F^{6,8}_{8} = \ln\left\{\frac{l_8}{d_{6,8}} + \left[1+\left(\frac{l_8}{d_{6,8}}\right)^2\right]^{1/2}\right\} - \left[1+\left(\frac{d_{6,8}}{l_8}\right)^2\right]^{1/2} + \left(\frac{d_{6,8}}{l_8}\right)$$

$$F^{6,8}_{\delta} = \ln\left\{\frac{l_\delta}{d_{6,8}} + \left[1+\left(\frac{l_\delta}{d_{6,8}}\right)^2\right]^{1/2}\right\} - \left[1+\left(\frac{d_{6,8}}{l_\delta}\right)^2\right]^{1/2} + \left(\frac{d_{6,8}}{l_\delta}\right)$$

EQUATION A.47 Mutual inductance between conductors 2 and 16

$$M_{2,16} = \frac{1}{2}\left\{\left(M^{2,16}_{16+3\delta} + M^{2,16}_{16+4\delta}\right) - \left(M^{2,16}_{3\delta} + M^{2,16}_{4\delta}\right)\right\}$$

where:

$$M^{2,16}_{16+3\delta} = 2l_{16+3\delta}F^{2,16}_{16+3\delta}$$

$$M^{2,16}_{16+4\delta} = 2l_{16+4\delta}F^{2,16}_{16+4\delta}$$

$$M^{2,16}_{3\delta} = 2l_{3\delta}F^{2,16}_{3\delta} \quad , \quad M^{2,16}_{4\delta} = 2l_{4\delta}F^{2,16}_{4\delta}$$

$$F^{2,16}_{16+3\delta} = \ln\left\{\frac{l_{16+3\delta}}{d_{2,16}} + \left[1+\left(\frac{l_{16+3\delta}}{d_{2,16}}\right)^2\right]^{1/2}\right\} - \left[1+\left(\frac{d_{2,16}}{l_{16+3\delta}}\right)^2\right]^{1/2} + \left(\frac{d_{2,16}}{l_{16+3\delta}}\right)$$

$$F^{2,16}_{16+4\delta} = \ln\left\{\frac{l_{16+4\delta}}{d_{2,16}} + \left[1+\left(\frac{l_{16+4\delta}}{d_{2,16}}\right)^2\right]^{1/2}\right\} - \left[1+\left(\frac{d_{2,16}}{l_{16+4\delta}}\right)^2\right]^{1/2} + \left(\frac{d_{2,16}}{l_{16+4\delta}}\right)$$

$$F^{2,16}_{2\delta} = \ln\left\{\frac{2\delta}{d_{2,16}} + \left[1+\left(\frac{2\delta}{d_{2,16}}\right)^2\right]^{1/2}\right\} - \left[1+\left(\frac{d_{2,16}}{l_{2\delta}}\right)^2\right]^{1/2} + \left(\frac{d_{2,16}}{l_{2\delta}}\right)$$

$$F^{2,16}_{\delta} = \ln\left\{\frac{\delta}{d_{2,16}} + \left[1+\left(\frac{\delta}{d_{2,16}}\right)^2\right]^{1/2}\right\} - \left[1+\left(\frac{d_{2,16}}{\delta}\right)^2\right]^{1/2} + \left(\frac{d_{2,16}}{\delta}\right)$$

© 2003 Microchip Technology Inc.

EQUATION A.48 Mutual inductance between conductors 14 and 16

$$M_{14,\,16} = \frac{1}{2}\left\{\left(M_{14}^{14,\,16} + M_{12}^{14,\,16}\right) - M_{\delta}^{14,\,16}\right\}$$

where:

$$M_{14}^{14,\,16} = 2l_{14}F_{14}^{14,\,16} \quad , \quad M_{12}^{14,\,16} = 2l_{12}F_{12}^{14,\,16}$$

$$M_{\delta}^{14,\,16} = 2l_{\delta}F_{\delta}^{14,\,16}$$

$$F_{14}^{14,\,16} = \ln\left\{\frac{l_{14}}{d_{14,\,16}} + \left[1 + \left(\frac{l_{14}}{d_{14,\,16}}\right)^2\right]^{1/2}\right\} - \left[1 + \left(\frac{d_{14,\,16}}{l_{14}}\right)^2\right]^{1/2} + \left(\frac{d_{14,\,16}}{l_{14}}\right)$$

$$F_{16}^{14,\,16} = \ln\left\{\frac{l_{16}}{d_{14,\,16}} + \left[1 + \left(\frac{l_{16}}{d_{14,\,16}}\right)^2\right]^{1/2}\right\} - \left[1 + \left(\frac{d_{14,\,16}}{l_{16}}\right)^2\right]^{1/2} + \left(\frac{d_{14,\,16}}{l_{16}}\right)$$

$$F_{\delta}^{14,\,16} = \ln\left\{\frac{l_{\delta}}{d_{14,\,16}} + \left[1 + \left(\frac{l_{\delta}}{d_{14,\,16}}\right)^2\right]^{1/2}\right\} - \left[1 + \left(\frac{d_{14,\,16}}{l_{\delta}}\right)^2\right]^{1/2} + \left(\frac{d_{14,\,16}}{l_{\delta}}\right)$$

EQUATION A.49 Mutual inductance between conductors 6 and 12

$$M_{6,\,12} = \frac{1}{2}\left\{\left(M_{12+2\delta}^{6,\,12} + M_{12+\delta}^{6,\,12}\right) - \left(M_{2\delta}^{6,\,12} + M_{\delta}^{6,\,12}\right)\right\}$$

where:

$$M_{12+2\delta}^{6,\,12} = 2l_{12+2\delta}F_{12+2\delta}^{6,\,12} \quad , \quad M_{12+\delta}^{6,\,12} = 2l_{12+\delta}F_{12+\delta}^{6,\,12}$$

$$M_{2\delta}^{6,\,12} = 2l_{2\delta}F_{2\delta}^{6,\,12} \quad , \quad M_{\delta}^{6,\,12} = 2l_{\delta}F_{\delta}^{6,\,12}$$

$$F_{12+2\delta}^{6,\,12} = \ln\left\{\frac{l_{12+2\delta}}{d_{6,\,12}} + \left[1 + \left(\frac{l_{12+2\delta}}{d_{6,\,12}}\right)^2\right]^{1/2}\right\} - \left[1 + \left(\frac{d_{6,\,12}}{l_{12+2\delta}}\right)^2\right]^{1/2} + \left(\frac{d_{6,\,12}}{l_{12+2\delta}}\right)$$

$$F_{12+\delta}^{6,\,12} = \ln\left\{\frac{l_{12+\delta}}{d_{6,\,12}} + \left[1 + \left(\frac{l_{12+\delta}}{d_{6,\,12}}\right)^2\right]^{1/2}\right\} - \left[1 + \left(\frac{d_{6,\,12}}{l_{12+\delta}}\right)^2\right]^{1/2} + \left(\frac{d_{6,\,12}}{l_{12+\delta}}\right)$$

$$F_{2\delta}^{6,\,12} = \ln\left\{\frac{2\delta}{d_{6,\,12}} + \left[1 + \left(\frac{2\delta}{d_{6,\,12}}\right)^2\right]^{1/2}\right\} - \left[1 + \left(\frac{d_{6,\,12}}{l_{2\delta}}\right)^2\right]^{1/2} + \left(\frac{d_{6,\,12}}{l_{2\delta}}\right)$$

$$F_{\delta}^{6,\,12} = \ln\left\{\frac{\delta}{d_{6,\,12}} + \left[1 + \left(\frac{\delta}{d_{6,\,12}}\right)^2\right]^{1/2}\right\} - \left[1 + \left(\frac{d_{6,\,12}}{\delta}\right)^2\right]^{1/2} + \left(\frac{d_{6,\,12}}{\delta}\right)$$

EQUATION A.50 Mutual inductance between conductors 10 and 12

$$M_{10,\,12} = \frac{1}{2}\left\{\left(M_{10}^{10,\,12} + M_{12}^{10,\,12}\right) - M_{\delta}^{10,\,12}\right\}$$

where:

$$M_{10}^{10,\,12} = 2l_{10}F_{10}^{10,\,12} \quad , \quad M_{12}^{10,\,12} = 2l_{12}F_{12}^{10,\,12}$$

$$M_{\delta}^{10,\,8} = 2l_{\delta}F_{\delta}^{10,\,12}$$

$$F_{10}^{10,\,12} = \ln\left\{\frac{l_{10}}{d_{10,\,12}} + \left[1 + \left(\frac{l_{10}}{d_{10,\,12}}\right)^2\right]^{1/2}\right\} - \left[1 + \left(\frac{d_{10,\,12}}{l_{10}}\right)^2\right]^{1/2} + \left(\frac{d_{10,\,12}}{l_{10}}\right)$$

$$F_{12}^{10,\,12} = \ln\left\{\frac{l_{12}}{d_{10,\,12}} + \left[1 + \left(\frac{l_{12}}{d_{10,\,12}}\right)^2\right]^{1/2}\right\} - \left[1 + \left(\frac{d_{10,\,12}}{l_{12}}\right)^2\right]^{1/2} + \left(\frac{d_{10,\,12}}{l_{12}}\right)$$

$$F_{\delta}^{10,\,12} = \ln\left\{\frac{l_{\delta}}{d_{10,\,12}} + \left[1 + \left(\frac{l_{\delta}}{d_{10,\,12}}\right)^2\right]^{1/2}\right\} - \left[1 + \left(\frac{d_{10,\,12}}{l_{\delta}}\right)^2\right]^{1/2} + \left(\frac{d_{10,\,12}}{l_{\delta}}\right)$$

© 2003 Microchip Technology Inc.

EQUATION A.51 Mutual inductance between conductors 6 and 16

$$M_{6,16} = \frac{1}{2}\left\{\left(M_{16+3\delta}^{6,16} + M_{16+2\delta}^{6,16}\right) - \left(M_{3\delta}^{6,16} + M_{2\delta}^{6,16}\right)\right\}$$

where:

$$M_{16+3\delta}^{6,16} = 2l_{16+3\delta}F_{16+3\delta}^{6,16}$$

$$M_{16+2\delta}^{6,16} = 2l_{16+2\delta}F_{16+2\delta}^{6,16}$$

$$M_{3\delta}^{6,16} = 2l_{3\delta}F_{3\delta}^{6,16} \quad , \quad M_{2\delta}^{6,16} = 2l_{2\delta}F_{2\delta}^{6,16}$$

$$F_{16+3\delta}^{6,16} = \ln\left\{\frac{l_{16+3\delta}}{d_{6,16}} + \left[1 + \left(\frac{l_{16+3\delta}}{d_{6,16}}\right)^2\right]^{1/2}\right\} - \left[1 + \left(\frac{d_{6,16}}{l_{16+3\delta}}\right)^2\right]^{1/2} + \left(\frac{d_{6,16}}{l_{16+3\delta}}\right)$$

$$F_{16+2\delta}^{6,16} = \ln\left\{\frac{l_{16+2\delta}}{d_{6,16}} + \left[1 + \left(\frac{l_{16+2\delta}}{d_{6,16}}\right)^2\right]^{1/2}\right\} - \left[1 + \left(\frac{d_{6,16}}{l_{16+2\delta}}\right)^2\right]^{1/2} + \left(\frac{d_{6,16}}{l_{16+2\delta}}\right)$$

$$F_{3\delta}^{6,16} = \ln\left\{\frac{l_{3\delta}}{d_{6,16}} + \left[1 + \left(\frac{l_{3\delta}}{d_{6,16}}\right)^2\right]^{1/2}\right\} - \left[1 + \left(\frac{d_{6,16}}{l_{3\delta}}\right)^2\right]^{1/2} + \left(\frac{d_{6,16}}{l_{3\delta}}\right)$$

$$F_{2\delta}^{6,16} = \ln\left\{\frac{l_{2\delta}}{d_{6,16}} + \left[1 + \left(\frac{l_{2\delta}}{d_{6,16}}\right)^2\right]^{1/2}\right\} - \left[1 + \left(\frac{d_{6,16}}{l_{2\delta}}\right)^2\right]^{1/2} + \left(\frac{d_{6,16}}{l_{2\delta}}\right)$$

EQUATION A.52 Mutual inductance between conductors 10 and 4

$$M_{10,4} = \frac{1}{2}\left\{\left(M_{12+2\delta}^{10,4} + M_{12+\delta}^{10,4}\right) - \left(M_{2\delta}^{10,4} + M_{\delta}^{10,4}\right)\right\}$$

where:

$$M_{10+2\delta}^{10,4} = 2l_{10+2\delta}F_{10+2\delta}^{10,4} \quad , \quad M_{\delta}^{10,4} = 2l_{\delta}F_{\delta}^{10,4}$$

$$M_{2\delta}^{10,4} = 2l_{2\delta}F_{2\delta}^{10,4} \quad , \quad M_{10+\delta}^{10,4} = 2l_{10+\delta}F_{10+\delta}^{10,4}$$

$$F_{10+2\delta}^{10,4} = \ln\left\{\frac{l_{10+2\delta}}{d_{10,4}} + \left[1 + \left(\frac{l_{10+2\delta}}{d_{10,4}}\right)^2\right]^{1/2}\right\} - \left[1 + \left(\frac{d_{10,4}}{l_{10+2\delta}}\right)^2\right]^{1/2} + \left(\frac{d_{10,4}}{l_{10+2\delta}}\right)$$

$$F_{10+\delta}^{10,4} = \ln\left\{\frac{l_{10+\delta}}{d_{10,4}} + \left[1 + \left(\frac{l_{10+\delta}}{d_{10,4}}\right)^2\right]^{1/2}\right\} - \left[1 + \left(\frac{d_{10,4}}{l_{10+\delta}}\right)^2\right]^{1/2} + \left(\frac{d_{10,4}}{l_{10+\delta}}\right)$$

$$F_{2\delta}^{10,4} = \ln\left\{\frac{2\delta}{d_{10,4}} + \left[1 + \left(\frac{2\delta}{d_{10,4}}\right)^2\right]^{1/2}\right\} - \left[1 + \left(\frac{d_{10,4}}{l_{2\delta}}\right)^2\right]^{1/2} + \left(\frac{d_{10,4}}{l_{2\delta}}\right)$$

$$F_{\delta}^{10,4} = \ln\left\{\frac{\delta}{d_{10,4}} + \left[1 + \left(\frac{\delta}{d_{10,4}}\right)^2\right]^{1/2}\right\} - \left[1 + \left(\frac{d_{10,4}}{\delta}\right)^2\right]^{1/2} + \left(\frac{d_{10,4}}{\delta}\right)$$

© 2003 Microchip Technology Inc.

EQUATION A.53 Mutual inductance between conductors 10 and 8

$$M_{14,12} = \frac{1}{2}\left\{\left(M_{14}^{14,12} + M_{12}^{14,12}\right) - M_{\delta}^{14,12}\right\}$$

where:

$$M_{14}^{14,12} = 2l_{14}F_{14}^{14,12} \quad , \quad M_{12}^{14,12} = 2l_{12}F_{12}^{14,12}$$

$$M_{\delta}^{14,12} = 2l_{\delta}F_{\delta}^{14,12}$$

$$F_{14}^{14,12} = \ln\left\{\frac{l_{14}}{d_{14,12}} + \left[1 + \left(\frac{l_{14}}{d_{14,12}}\right)^2\right]^{1/2}\right\} - \left[1 + \left(\frac{d_{14,12}}{l_{14}}\right)^2\right]^{1/2} + \left(\frac{d_{14,12}}{l_{14}}\right)$$

$$F_{12}^{14,12} = \ln\left\{\frac{l_{12}}{d_{10,8}} + \left[1 + \left(\frac{l_{12}}{d_{14,12}}\right)^2\right]^{1/2}\right\} - \left[1 + \left(\frac{d_{14,12}}{l_{12}}\right)^2\right]^{1/2} + \left(\frac{d_{14,12}}{l_{12}}\right)$$

$$F_{\delta}^{14,12} = \ln\left\{\frac{l_{\delta}}{d_{14,12}} + \left[1 + \left(\frac{l_{\delta}}{d_{14,12}}\right)^2\right]^{1/2}\right\} - \left[1 + \left(\frac{d_{14,12}}{l_{\delta}}\right)^2\right]^{1/2} + \left(\frac{d_{14,12}}{l_{\delta}}\right)$$

EQUATION A.54 Mutual inductance between conductors 10 and 16

$$M_{10,16} = \frac{1}{2}\left\{\left(M_{16+2\delta}^{10,16} + M_{16+\delta}^{10,16}\right) - \left(M_{2\delta}^{10,16} + M_{\delta}^{10,16}\right)\right\}$$

where:

$$M_{16+2\delta}^{10,16} = 2l_{16+2\delta}F_{16+2\delta}^{10,16} \, , \quad M_{16+\delta}^{10,16} = 2l_{16+\delta}F_{16+\delta}^{10,16}$$

$$M_{2\delta}^{10,16} = 2l_{2\delta}F_{2\delta}^{10,16} \quad , \quad M_{\delta}^{10,16} = 2l_{\delta}F_{\delta}^{10,16}$$

$$F_{16+2\delta}^{10,16} = \ln\left\{\frac{l_{16+2\delta}}{d_{10,16}} + \left[1 + \left(\frac{l_{16+2\delta}}{d_{10,16}}\right)^2\right]^{1/2}\right\} - \left[1 + \left(\frac{d_{10,16}}{l_{16+2\delta}}\right)^2\right]^{1/2} + \left(\frac{d_{10,16}}{l_{16+2\delta}}\right)$$

$$F_{16+\delta}^{10,16} = \ln\left\{\frac{l_{16+\delta}}{d_{10,16}} + \left[1 + \left(\frac{l_{16+\delta}}{d_{10,16}}\right)^2\right]^{1/2}\right\} - \left[1 + \left(\frac{d_{10,16}}{l_{16+\delta}}\right)^2\right]^{1/2} + \left(\frac{d_{10,16}}{l_{16+\delta}}\right)$$

$$F_{2\delta}^{10,16} = \ln\left\{\frac{l_{2\delta}}{d_{10,16}} + \left[1 + \left(\frac{l_{2\delta}}{d_{10,16}}\right)^2\right]^{1/2}\right\} - \left[1 + \left(\frac{d_{10,16}}{l_{2\delta}}\right)^2\right]^{1/2} + \left(\frac{d_{10,16}}{l_{2\delta}}\right)$$

$$F_{\delta}^{10,16} = \ln\left\{\frac{\delta}{d_{10,16}} + \left[1 + \left(\frac{\delta}{d_{10,16}}\right)^2\right]^{1/2}\right\} - \left[1 + \left(\frac{d_{10,16}}{\delta}\right)^2\right]^{1/2} + \left(\frac{d_{10,16}}{\delta}\right)$$

EQUATION A.55 Mutual inductance between conductor 1 and other conductors

$$M_{1,3} = M_{1}^{1,3} = M_{3}^{1,3} = 2l_{1}F_{1}^{1,3}$$

$$M_{1,5} = \frac{1}{2}\{(M_{1}^{1,5} + M_{5}^{1,5}) - M_{d}^{1,5}\}$$

$$M_{1,7} = M_{7+d}^{1,7} - M_{d}^{1,7}$$

$$M_{1,9} = \frac{1}{2}\{(M_{9+2d}^{1,9} + M_{9+d}^{1,9}) - (M_{2d}^{1,9} + M_{d}^{1,9})\}$$

$$M_{1,11} = M_{11+2d}^{1,11} - M_{2d}^{1,11}$$

$$M_{1,13} = \frac{1}{2}\{(M_{13+3d}^{1,13} + M_{13+2d}^{1,13}) - (M_{3d}^{1,13} + M_{2d}^{1,13})\}$$

$$M_{1,15} = M_{15+3d}^{1,15} - M_{3d}^{1,15}$$

© 2003 Microchip Technology Inc.

EQUATION A.56 Mutual inductance between conductors 14 and 4

$$M_{14,4} = \frac{1}{2}\left\{\left(M^{14,4}_{14+3\delta} + M^{14,4}_{14+2\delta}\right) - \left(M^{14,4}_{3\delta} + M^{14,4}_{2\delta}\right)\right\}$$

where:

$$M^{14,4}_{16+3\delta} = 2l_{16+3\delta}F^{14,4}_{16+3\delta}$$

$$M^{14,4}_{16+2\delta} = 2l_{16+2\delta}F^{14,4}_{16+2\delta}$$

$$M^{14,4}_{3\delta} = 2l_{3\delta}F^{14,4}_{3\delta} \quad , \quad M^{14,4}_{2\delta} = 2l_{2\delta}F^{14,4}_{2\delta}$$

$$F^{14,4}_{14+3\delta} = \ln\left\{\frac{l_{14+3\delta}}{d_{14,4}} + \left[1+\left(\frac{l_{14+3\delta}}{d_{14,4}}\right)^2\right]^{1/2}\right\} - \left[1+\left(\frac{d_{14,4}}{l_{14+3\delta}}\right)^2\right]^{1/2} + \left(\frac{d_{14,4}}{l_{14+3\delta}}\right)$$

$$F^{14,4}_{14+2\delta} = \ln\left\{\frac{l_{14+2\delta}}{d_{14,4}} + \left[1+\left(\frac{l_{14+2\delta}}{d_{14,4}}\right)^2\right]^{1/2}\right\} - \left[1+\left(\frac{d_{14,4}}{l_{14+2\delta}}\right)^2\right]^{1/2} + \left(\frac{d_{14,4}}{l_{14+2\delta}}\right)$$

$$F^{14,4}_{2\delta} = \ln\left\{\frac{l_{2\delta}}{d_{14,4}} + \left[1+\left(\frac{l_{2\delta}}{d_{14,4}}\right)^2\right]^{1/2}\right\} - \left[1+\left(\frac{d_{14,4}}{l_{2\delta}}\right)^2\right]^{1/2} + \left(\frac{d_{14,4}}{l_{2\delta}}\right)$$

$$F^{14,4}_{2\delta} = \ln\left\{\frac{l_{2\delta}}{d_{14,4}} + \left[1+\left(\frac{l_{2\delta}}{d_{14,4}}\right)^2\right]^{1/2}\right\} - \left[1+\left(\frac{d_{14,4}}{l_{2\delta}}\right)^2\right]^{1/2} + \left(\frac{d_{14,4}}{l_{2\delta}}\right)$$

EQUATION A.57 Mutual inductance between conductor 2 and other conductors

$$M_{2,6} = M^{2,6}_{6+d} - M^{2,6}_{d}$$

$$M_{2,4} = \frac{1}{2}\{(M^{2,4}_{2} + M^{2,4}_{4}) - M^{2,4}_{d}\}$$

$$M_{2,10} = M^{2,10}_{10+2d} - M^{2,10}_{2d}$$

$$M_{2,12} = \frac{1}{2}\{(M^{2,12}_{12+2d} + M^{2,12}_{12+3d}) - (M^{2,12}_{2d} + M^{2,12}_{3d})\}$$

$$M_{2,14} = M^{2,14}_{14+3d} - M^{2,14}_{3d}$$

$$M_{2,16} = \frac{1}{2}\{(M^{2,16}_{16+3d} + M^{2,16}_{16+4d}) - (M^{2,16}_{3d} + M^{2,16}_{2d})\}$$

$$M_{2,8} = \frac{1}{2}\{(M^{2,8}_{8+2\delta} + M^{2,8}_{8+\delta}) - (M^{2,8}_{2\delta} + M^{2,8}_{\delta})\}$$

EQUATION A.58 Mutual inductance between conductors 14 and 8

$$M_{14,8} = \frac{1}{2}\left\{\left(M^{14,8}_{14+2\delta} + M^{14,8}_{14+\delta}\right) - \left(M^{14,8}_{2\delta} + M^{14,8}_{\delta}\right)\right\}$$

where:

$$M^{14,8}_{14+2\delta} = 2l_{14+2\delta}F^{14,8}_{14+2\delta} \quad , \quad M^{14,8}_{14+\delta} = 2l_{14+\delta}F^{14,8}_{14+\delta}$$

$$M^{14,8}_{2\delta} = 2l_{2\delta}F^{14,8}_{2\delta} \quad , \quad M^{14,8}_{\delta} = 2l_{\delta}F^{14,8}_{\delta}$$

$$F^{14,8}_{14+2\delta} = \ln\left\{\frac{l_{14+2\delta}}{d_{14,8}} + \left[1+\left(\frac{l_{14+2\delta}}{d_{14,8}}\right)^2\right]^{1/2}\right\} - \left[1+\left(\frac{d_{14,8}}{l_{14+2\delta}}\right)^2\right]^{1/2} + \left(\frac{d_{14,8}}{l_{14+2\delta}}\right)$$

$$F^{14,8}_{14+\delta} = \ln\left\{\frac{l_{14+\delta}}{d_{14,8}} + \left[1+\left(\frac{l_{14+\delta}}{d_{14,8}}\right)^2\right]^{1/2}\right\} - \left[1+\left(\frac{d_{14,8}}{l_{14+\delta}}\right)^2\right]^{1/2} + \left(\frac{d_{14,8}}{l_{14+\delta}}\right)$$

$$F^{14,8}_{2\delta} = \ln\left\{\frac{l_{2\delta}}{d_{14,8}} + \left[1+\left(\frac{l_{2\delta}}{d_{14,8}}\right)^2\right]^{1/2}\right\} - \left[1+\left(\frac{d_{14,8}}{l_{2\delta}}\right)^2\right]^{1/2} + \left(\frac{d_{14,8}}{l_{2\delta}}\right)$$

$$F^{14,8}_{\delta} = \ln\left\{\frac{l_{\delta}}{d_{14,8}} + \left[1+\left(\frac{l_{\delta}}{d_{14,8}}\right)^2\right]^{1/2}\right\} - \left[1+\left(\frac{d_{14,8}}{l_{\delta}}\right)^2\right]^{1/2} + \left(\frac{d_{14,8}}{l_{\delta}}\right)$$

EQUATION A.59 Mutual inductance between conductor 5 and other conductors

$$M_{5,9} = M^{5,9}_{9+d} - M^{5,9}_{d}$$

$$M_{5,7} = \frac{1}{2}\{(M^{5,7}_{5} + M^{5,7}_{7}) - M^{5,7}_{d}\}$$

$$M_{5,3} = \frac{1}{2}\{(M^{5,3}_{5} + M^{5,3}_{3}) - M^{5,3}_{d}\}$$

$$M_{5,11} = \frac{1}{2}\{(M^{5,11}_{11+d} + M^{5,11}_{11+2d}) - (M^{5,11}_{d} + M^{5,11}_{2d})\}$$

$$M_{5,13} = M^{5,13}_{13+2d} - M^{5,13}_{2d}$$

$$M_{5,15} = \frac{1}{2}\{(M^{5,15}_{15+2d} + M^{5,15}_{15+3d}) - (M^{5,15}_{3d} + M^{5,15}_{2d})\}$$

EQUATION A.60 Mutual inductance between conductor 9 and other conductors

$$M_{9,3} = \frac{1}{2}\{(M_{9+2d}^{9,3} + M_{9+d}^{9,3}) - (M_{2d}^{9,3} + M_{d}^{9,3})\}$$

$$M_{9,7} = \frac{1}{2}\{(M_{9}^{9,7} + M_{7}^{9,7}) - M_{d}^{9,7}\}$$

$$M_{9,11} = \frac{1}{2}\{(M_{9}^{9,11} + M_{11}^{9,11}) - M_{d}^{9,11}\}$$

$$M_{9,13} = M_{13+d}^{9,13} - M_{d}^{9,13}$$

EQUATION A.61 Mutual inductance between conductor 13 and other conductors

$$M_{13,3} = \frac{1}{2}\{(M_{13+3d}^{13,3} + M_{13+2d}^{13,3}) - (M_{3d}^{13,3} + M_{2d}^{13,3})\}$$

$$M_{13,7} = \frac{1}{2}\{(M_{13+2d}^{13,7} + M_{13+d}^{13,7}) - (M_{2d}^{13,7} + M_{d}^{13,7})\}$$

$$M_{13,11} = \frac{1}{2}\{(M_{13}^{13,11} + M_{11}^{13,11}) - M_{d}^{13,11}\}$$

$$M_{13,15} = \frac{1}{2}\{(M_{13}^{13,15} + M_{15}^{13,15}) - M_{d}^{13,15}\}$$

EQUATION A.62 Mutual inductance between conductors 15, 11, 7 and other conductors

$$M_{15,11} = M_{15+d}^{15,11} - M_{d}^{15,11}$$

$$M_{15,7} = M_{15+2d}^{15,7} - M_{2d}^{15,7}$$

$$M_{15,3} = M_{15+3d}^{15,3} - M_{3d}^{15,3}$$

$$M_{11,7} = M_{11+d}^{11,7} - M_{d}^{11,7}$$

$$M_{11,3} = M_{11+2d}^{11,3} - M_{2d}^{11,3}$$

$$M_{7,3} = M_{7+d}^{7,3} - M_{d}^{7,3}$$

EQUATION A.63 Mutual inductance between conductor 6 and other conductors

$$M_{6,10} = M_{10+d}^{6,10} - M_{d}^{6,10}$$

$$M_{6,14} = M_{14+2d}^{6,14} - M_{2d}^{6,14}$$

$$M_{6,16} = \frac{1}{2}\{(M_{16+2d}^{6,16} + M_{16+3d}^{6,16}) - (M_{2d}^{6,16} + M_{3d}^{6,16})\}$$

$$M_{6,12} = \frac{1}{2}\{(M_{12+2\delta}^{6,12} + M_{12+\delta}^{6,12}) - (M_{2\delta}^{6,12} + M_{\delta}^{6,12})\}$$

$$M_{6,8} = \frac{1}{2}\{(M_{6}^{6,8} + M_{8}^{6,8}) - M_{d}^{6,8}\}$$

$$M_{6,4} = \frac{1}{2}\{(M_{6}^{6,4} + M_{4}^{6,4}) - M_{d}^{6,4}\}$$

EQUATION A.64 Mutual inductance between conductor 10 and other conductors

$$M_{10,14} = M_{14+d}^{10,14} - M_{d}^{10,14}$$

$$M_{10,16} = \frac{1}{2}\{(M_{16+2d}^{10,16} + M_{16+d}^{10,16}) - (M_{2d}^{10,16} + M_{d}^{10,16})$$

$$M_{10,12} = \frac{1}{2}\{(M_{10}^{10,12} + M_{12}^{10,12}) - M_{d}^{10,12}\}$$

$$M_{10,8} = \frac{1}{2}\{(M_{10}^{10,8} + M_{8}^{10,8}) - M_{d}^{10,8}\}$$

$$M_{10,4} = \frac{1}{2}\{(M_{10+d}^{10,4} + M_{10+2d}^{10,4}) - (M_{d}^{10,4} + M_{2d}^{10,4})\}$$

EQUATION A.65 Mutual inductance between conductors 16, 12, 8 and other conductors

$$M_{16,12} = M_{16+d}^{16,12} - M_{d}^{16,12}$$

$$M_{16,8} = M_{16+2d}^{16,8} - M_{2d}^{16,8}$$

$$M_{16,4} = M_{16+3d}^{16,4} - M_{3d}^{16,4}$$

$$M_{12,8} = M_{12+d}^{12,8} - M_{d}^{12,8}$$

$$M_{12,4} = M_{12+2d}^{12,4} - M_{2d}^{12,4}$$

$$M_{8,4} = M_{8+d}^{8,4} - M_{d}^{8,4}$$

© 2003 Microchip Technology Inc.

APPENDIX B: MATHLAB PROGRAM EXAMPLE FOR EXAMPLE 8

```
% One_turn.m
% Inductance calculation with mutual inductance terms
% for 1 turn rectangular shape.
% Inductor type = Etched MCRF450 reader antenna
%
% Youbok Lee
%
% Microchip Technology Inc.
%-----------------------------------------
% L_T = L_o + M_+ M_-  (nH)
% unit = cm
% where
% L_o = L1 + L2 + L3+ L4 = (self inductance)
% M_- = Negative mutual inductance
% M_+ = positive mutual inductance = 0 for 1 turn coil
%
%------------- Length of each conductor -------------------
% l_1a = l_1b = 3" = 7.62 Cm
% l_2 = l_4 = 10" = 25.4 Cm
% l_4 = 7.436” = 18.887 Cm
% gap = 3.692 cm
%-------Define segment length (cm) ---------------------
w = 0.508
t = 0.0001
gap = 3.692
l_1A = 7.62 - w/2.
l_1B = 7.62 - w/2.
l_2 = 25.4  - w
l_3 = 18.887  - w
l_4 = 25.4  - w
%---------- distance between branches (cm) -------
d13 = l_2
d24 = l_3
%----------calculate self inductance ---------
L1A = 2*l_1A*(log((2*l_1A)/(w+t)) + 0.50049 + (w+t)/(3*l_1A))
L1B = 2*l_1B*(log((2*l_1B)/(w+t)) + 0.50049 + (w+t)/(3*l_1B))

L2 = 2*l_2*(log((2*l_2)/(w+t)) + 0.50049 + (w+t)/(3*l_2))
L3 = 2*l_3*(log((2*l_3)/(w+t)) + 0.50049 + (w+t)/(3*l_3))

L4 = 2*l_4*(log((2*l_4)/(w+t)) + 0.50049 + (w+t)/(3*l_4))
```

```
L_o = L1A + L1B + L2 + L3 + L4
%-------- calculate mutual inductance parameters ----
Q1A_3 =log((l_1A/d13)+(1+(l_1A/d13)^2)^0.5)-(1+(d13/l_1A)^2)^0.5 + (d13/l_1A)
Q1B_3 =log((l_1B/d13)+(1+(l_1B/d13)^2)^0.5)-(1+(d13/l_1B)^2)^0.5 + (d13/l_1B)

Q_1A_gap =log(((l_1A+gap)/d13)+(1+((l_1A+gap)/d13)^2)^0.5)-(1+(d13/(l_1A+gap))^2)^0.5 + (d13/(l_1A+gap))
Q_1B_gap =log(((l_1B+gap)/d13)+(1+((l_1B+gap)/d13)^2)^0.5)-(1+(d13/(l_1B+gap))^2)^0.5 + (d13/(l_1B+gap))


Q3 =log((l_3/d13)+(1+(l_3/d13)^2)^0.5)-(1+(d13/l_3)^2)^0.5 + (d13/l_3)

Q2_4 =log((l_2/d24)+(1+(l_2/d24)^2)^0.5)-(1+(d24/l_2)^2)^0.5 + (d24/l_2)

%--------- calculate negative mutual inductance --------
%
M1A = 2*l_1A*Q1A_3
M1B = 2*l_1B*Q1B_3
M1A_gap = 2*(l_1A+gap)*Q_1A_gap
M1B_gap = 2*(l_1B+gap)*Q_1B_gap
M3 = 2*l_3*Q3

M1A_3 = (M1A+M3 - M1B_gap)/2.
M1B_3 = (M1B+M3 - M1A_gap)/2.
M2_4 = 2* (l_2*Q2_4)

M_T = 2* (M1A_3 + M1B_3 + M2_4)
%--------- Total Inductance (nH) -----------
L_T = L_o - M_T
```


© 2003 Microchip Technology Inc.

REFERENCES

[1] V. G. Welsby, The Theory and Design of Inductance Coils, John Wiley and Sons, Inc., 1960.

[2] Frederick W. Grover, Inductance Calculations Working Formulas and Tables, Dover Publications, Inc., New York, NY., 1946.

[3] Keith Henry, Editor, Radio Engineering Handbook, McGraw-Hill Book Company, New York, NY., 1963.

[4] H.M. Greenhouse, IEEE Transaction on Parts, Hybrid, and Packaging, Vol. PHP-10, No. 2, June 1974.

[5] K. Fujimoto, A. Henderson, K. Hirasawa, and J.R. James, Small Antennas, John Wiley & Sons Inc., ISBN 0471 914134, 1987

[6] James K. Hardy, High Frequency Circuit Design, Reston Publishing Company, Inc.Reston, Virginia, 1975.

[7] Simon Ramo, Fields and Waves in Communication Electronics, John Wiley, 1984.

© 2003 Microchip Technology Inc.

NOTES:

© 2003 Microchip Technology Inc.

Note the following details of the code protection feature on Microchip devices:

- Microchip products meet the specification contained in their particular Microchip Data Sheet.
- Microchip believes that its family of products is one of the most secure families of its kind on the market today, when used in the intended manner and under normal conditions.
- There are dishonest and possibly illegal methods used to breach the code protection feature. All of these methods, to our knowledge, require using the Microchip products in a manner outside the operating specifications contained in Microchip's Data Sheets. Most likely, the person doing so is engaged in theft of intellectual property.
- Microchip is willing to work with the customer who is concerned about the integrity of their code.
- Neither Microchip nor any other semiconductor manufacturer can guarantee the security of their code. Code protection does not mean that we are guaranteeing the product as “unbreakable.”

Code protection is constantly evolving. We at Microchip are committed to continuously improving the code protection features of our products.

Information contained in this publication regarding device applications and the like is intended through suggestion only and may be superseded by updates. It is your responsibility to ensure that your application meets with your specifications. No representation or warranty is given and no liability is assumed by Microchip Technology Incorporated with respect to the accuracy or use of such information, or infringement of patents or other intellectual property rights arising from such use or otherwise. Use of Microchip’s products as critical components in life support systems is not authorized except with express written approval by Microchip. No licenses are conveyed, implicitly or otherwise, under any intellectual property rights.

Trademarks

The Microchip name and logo, the Microchip logo, KEELOQ, MPLAB, PIC, PICmicro, PICSTART, PRO MATE and PowerSmart are registered trademarks of Microchip Technology Incorporated in the U.S.A. and other countries.

FilterLab, microID, MXDEV, MXLAB, PICMASTER, SEEVAL and The Embedded Control Solutions Company are registered trademarks of Microchip Technology Incorporated in the U.S.A.

Accuron, dsPIC, dsPICDEM.net, ECONOMONITOR, FanSense, FlexROM, fuzzyLAB, In-Circuit Serial Programming, ICSP, ICEPIC, microPort, Migratable Memory, MPASM, MPLIB, MPLINK, MPSIM, PICC, PICkit, PICDEM, PICDEM.net, PowerCal, PowerInfo, PowerTool, rfPIC, Select Mode, SmartSensor, SmartShunt, SmartTel and Total Endurance are trademarks of Microchip Technology Incorporated in the U.S.A. and other countries.

Serialized Quick Turn Programming (SQTP) is a service mark of Microchip Technology Incorporated in the U.S.A.

All other trademarks mentioned herein are property of their respective companies.

© 2003, Microchip Technology Incorporated, Printed in the U.S.A., All Rights Reserved.

Printed on recycled paper.

DNV Certification, Inc. USA
ANSI·RAB QMS ACCREDITED
DNV MSC The Netherlands Accredited by the RvA
ISO 9001 / QS-9000 REGISTERED FIRM

Microchip received QS-9000 quality system certification for its worldwide headquarters, design and wafer fabrication facilities in Chandler and Tempe, Arizona in July 1999 and Mountain View, California in March 2002. The Company’s quality system processes and procedures are QS-9000 compliant for its PICmicro® 8-bit MCUs, KEELOQ® code hopping devices, Serial EEPROMs, microperipherals, non-volatile memory and analog products. In addition, Microchip’s quality system for the design and manufacture of development systems is ISO 9001 certified.

WORLDWIDE SALES AND SERVICE

AMERICAS

Corporate Office
2355 West Chandler Blvd.
Chandler, AZ 85224-6199
Tel: 480-792-7200 Fax: 480-792-7277
Technical Support: 480-792-7627
Web Address: http://www.microchip.com

Rocky Mountain
2355 West Chandler Blvd.
Chandler, AZ 85224-6199
Tel: 480-792-7966 Fax: 480-792-4338

Atlanta
3780 Mansell Road, Suite 130
Alpharetta, GA 30022
Tel: 770-640-0034 Fax: 770-640-0307

Boston
2 Lan Drive, Suite 120
Westford, MA 01886
Tel: 978-692-3848 Fax: 978-692-3821

Chicago
333 Pierce Road, Suite 180
Itasca, IL 60143
Tel: 630-285-0071 Fax: 630-285-0075

Dallas
4570 Westgrove Drive, Suite 160
Addison, TX 75001
Tel: 972-818-7423 Fax: 972-818-2924

Detroit
Tri-Atria Office Building
32255 Northwestern Highway, Suite 190
Farmington Hills, MI 48334
Tel: 248-538-2250 Fax: 248-538-2260

Kokomo
2767 S. Albright Road
Kokomo, Indiana 46902
Tel: 765-864-8360 Fax: 765-864-8387

Los Angeles
18201 Von Karman, Suite 1090
Irvine, CA 92612
Tel: 949-263-1888 Fax: 949-263-1338

San Jose
Microchip Technology Inc.
2107 North First Street, Suite 590
San Jose, CA 95131
Tel: 408-436-7950 Fax: 408-436-7955

Toronto
6285 Northam Drive, Suite 108
Mississauga, Ontario L4V 1X5, Canada
Tel: 905-673-0699 Fax: 905-673-6509

ASIA/PACIFIC

Australia
Microchip Technology Australia Pty Ltd
Suite 22, 41 Rawson Street
Epping 2121, NSW
Australia
Tel: 61-2-9868-6733 Fax: 61-2-9868-6755

China - Beijing
Microchip Technology Consulting (Shanghai) Co., Ltd., Beijing Liaison Office
Unit 915
Bei Hai Wan Tai Bldg.
No. 6 Chaoyangmen Beidajie
Beijing, 100027, No. China
Tel: 86-10-85282100 Fax: 86-10-85282104

China - Chengdu
Microchip Technology Consulting (Shanghai) Co., Ltd., Chengdu Liaison Office
Rm. 2401-2402, 24th Floor,
Ming Xing Financial Tower
No. 88 TIDU Street
Chengdu 610016, China
Tel: 86-28-86766200 Fax: 86-28-86766599

China - Fuzhou
Microchip Technology Consulting (Shanghai) Co., Ltd., Fuzhou Liaison Office
Unit 28F, World Trade Plaza
No. 71 Wusi Road
Fuzhou 350001, China
Tel: 86-591-7503506 Fax: 86-591-7503521

China - Hong Kong SAR
Microchip Technology Hongkong Ltd.
Unit 901-6, Tower 2, Metroplaza
223 Hing Fong Road
Kwai Fong, N.T., Hong Kong
Tel: 852-2401-1200 Fax: 852-2401-3431

China - Shanghai
Microchip Technology Consulting (Shanghai) Co., Ltd.
Room 701, Bldg. B
Far East International Plaza
No. 317 Xian Xia Road
Shanghai, 200051
Tel: 86-21-6275-5700 Fax: 86-21-6275-5060

China - Shenzhen
Microchip Technology Consulting (Shanghai) Co., Ltd., Shenzhen Liaison Office
Rm. 1812, 18/F, Building A, United Plaza
No. 5022 Binhe Road, Futian District
Shenzhen 518033, China
Tel: 86-755-82901380 Fax: 86-755-82966626

China - Qingdao
Rm. B503, Fullhope Plaza,
No. 12 Hong Kong Central Rd.
Qingdao 266071, China
Tel: 86-532-5027355 Fax: 86-532-5027205

India
Microchip Technology Inc.
India Liaison Office
Divyasree Chambers
1 Floor, Wing A (A3/A4)
No. 11, O'Shaugnessey Road
Bangalore, 560 025, India
Tel: 91-80-2290061 Fax: 91-80-2290062

Japan
Microchip Technology Japan K.K.
Benex S-1 6F
3-18-20, Shinyokohama
Kohoku-Ku, Yokohama-shi
Kanagawa, 222-0033, Japan
Tel: 81-45-471- 6166 Fax: 81-45-471-6122

Korea
Microchip Technology Korea
168-1, Youngbo Bldg. 3 Floor
Samsung-Dong, Kangnam-Ku
Seoul, Korea 135-882
Tel: 82-2-554-7200 Fax: 82-2-558-5934

Singapore
Microchip Technology Singapore Pte Ltd.
200 Middle Road
#07-02 Prime Centre
Singapore, 188980
Tel: 65-6334-8870 Fax: 65-6334-8850

Taiwan
Microchip Technology (Barbados) Inc.,
Taiwan Branch
11F-3, No. 207
Tung Hua North Road
Taipei, 105, Taiwan
Tel: 886-2-2717-7175 Fax: 886-2-2545-0139

EUROPE

Austria
Microchip Technology Austria GmbH
Durisolstrasse 2
A-4600 Wels
Austria
Tel: 43-7242-2244-399
Fax: 43-7242-2244-393

Denmark
Microchip Technology Nordic ApS
Regus Business Centre
Lautrup hoj 1-3
Ballerup DK-2750 Denmark
Tel: 45 4420 9895 Fax: 45 4420 9910

France
Microchip Technology SARL
Parc d'Activite du Moulin de Massy
43 Rue du Saule Trapu
Batiment A - ler Etage
91300 Massy, France
Tel: 33-1-69-53-63-20 Fax: 33-1-69-30-90-79

Germany
Microchip Technology GmbH
Steinheilstrasse 10
D-85737 Ismaning, Germany
Tel: 49-89-627-144 0 Fax: 49-89-627-144-44

Italy
Microchip Technology SRL
Centro Direzionale Colleoni
Palazzo Taurus 1 V. Le Colleoni 1
20041 Agrate Brianza
Milan, Italy
Tel: 39-039-65791-1 Fax: 39-039-6899883

United Kingdom
Microchip Ltd.
505 Eskdale Road
Winnersh Triangle
Wokingham
Berkshire, England RG41 5TU
Tel: 44 118 921 5869 Fax: 44-118 921-5820

12/05/02

© 2003 Microchip Technology Inc.