UNITED STATES PATENT AND TRADEMARK OFFICE

BEFORE THE PATENT TRIAL AND APPEAL BOARD

SAMSUNG ELECTRONICS CO., LTD.
Petitioner

v.

MOJO MOBILITY INC.
Patent Owner

Patent No. 9,577,440

PETITION FOR *INTER PARTES* REVIEW
OF U.S. PATENT NO. 9,577,440

TABLE OF CONTENTS

I. INTRODUCTION 1

II. MANDATORY NOTICES 1

III. PAYMENT OF FEES 2

IV. GROUNDS FOR STANDING.....2

V. PRECISE RELIEF REQUESTED AND GROUNDS 2

VI. LEVEL OF ORDINARY SKILL 3

VII. THE ’440 PATENT 4

VIII. CLAIM CONSTRUCTION 5

IX. DETAILED EXPLANATION OF GROUNDS.....7

A. Ground 1: Claims 1 and 27 are unpatentable under § 103(a) as being obvious over *Nakamura* in view of *Odendaal* and *Calhoon* 7

1. Claims 1 and 27.....7

X. DISCRETIONARY DENIAL IS NOT APPROPRIATE 77

XI. CONCLUSION.....81

LIST OF EXHIBITS

Ex. 1001	U.S. Patent No. 9,577,440
Ex. 1002	Declaration of R. Jacob Baker, Ph.D., P.E.
Ex. 1003	Curriculum Vitae of R. Jacob Baker, Ph.D., P.E.
Ex. 1004	Prosecution History of U.S. Patent No. 9,577,440
Ex. 1005	U.S. Patent Application Publication No. 2005/0068019 ("*Nakamura*")
Ex. 1006	U.S. Patent Application Publication No. 2005/0127868 ("*Calhoon*")
Ex. 1007	U.S. Patent Application Publication No. 2006/0202665 ("*Hsu*")
Ex. 1008	U.S. Patent No. 6,960,968 ("*Odendaal*")
Ex. 1009	U.S. Patent No. 6,489,745 ("*Koreis*")
Ex. 1010	U.S. Patent No. 6,366,817 ("*Kung*")
Ex. 1011	Physics, Henry Semat et al., Rinehart & Co., Inc., 1958, Chapters 29-32 ("*Semat*")
Ex. 1012	RESERVED
Ex. 1013	International Patent Application Publication No. WO1996040367 ("*WangII*")
Ex. 1014	RESERVED
Ex. 1015	U.S. Patent No. 4,942,352 ("*Sano*")
Ex. 1016-1018	RESERVED
Ex. 1019	U.S. Patent No. 5,733,313 ("*Barreras*")
Ex. 1020-1023	RESERVED
Ex. 1024	U.S. Patent No. 7,378,817 ("*CalhoonII*")

Ex. 1025	International Patent Application Publication No. WO2003/096361 ("*Cheng*")
Ex. 1026	International Patent Application Publication No. WO2004/038888 ("*ChengII*")
Ex. 1027	Spiral Inductor Design for Quality Factor, Sang-Gug Lee et al., Journal of Semiconductor Technology and Science, Vol. 2. No. 1, March 2002 ("*Lee*")
Ex. 1028	U.S. Patent Application Publication No. 2001/0055207 ("*Barbeau*")
Ex. 1029	AN710 Antenna Circuit Design for RFID Applications
Ex. 1030	U.S. Patent No. 6,606,247 ("*Credelle*")
Ex. 1031	U.S. Patent Application Publication No. 2009/0072784A1 ("*Erickson*")
Ex. 1032	Mojo Mobility's Infringement Contentions in *Mojo Mobility Inc. v. Samsung Elecs. Co., Ltd.*, No. 2:22-cv-00398 (E.D. Tex.) (February 28, 2023)
Ex. 1033	Mojo Mobility's Infringement Chart for U.S. Patent No. 9,577,440 (Ex. 2) accompanying Mojo Mobility's Infringement Contentions in *Mojo Mobility Inc. v. Samsung Elecs. Co., Ltd.*, No. 2:22-cv-00398 (E.D. Tex.) (February 28, 2023)
Ex. 1034	Memorandum from Director Vidal (June 21, 2022)
Ex. 1035	Federal Court Management Statistics (December 2022)
Ex. 1036	Docket Control Order of March 28, 2023, *Mojo Mobility Inc. v. Samsung Elecs. Co., Ltd.*, No. 2:22-cv-00398 (E.D. Tex.)
Ex. 1037	GB Patent Application Publication No. 2202414 ("*Logan*")
Ex. 1038	U.S. Patent No. 7,226,442 ("*Sheppard*")
Ex. 1039	Watson, J., Mastering Electronics, Third Ed., McGraw-Hill, Inc. (1990) ("*Watson*")

Ex. 1040	Sedra, A., *et al.*, Microelectronic Circuits, Fourth Ed., Oxford University Press (1998) ("*Sedra*")
Ex. 1041	U.S. Patent Application Publication No. 2006/0145660A1 ("*Black*")
Ex. 1042	U.S. Patent No. 5,780,992 ("*Beard*")
Ex. 1043	U.S. Patent No. 6,912,137 ("*Berghegger*")

I. INTRODUCTION

Samsung Electronics Co., Ltd. ("Petitioner") requests *inter partes* review of claims 1 and 27 ("challenged claims") of U.S. Patent No. 9,577,440 ("the '440 patent") (Ex. 1001) assigned to Mojo Mobility Inc. ("PO"). For the reasons below, claims 1 and 27 should be found unpatentable and canceled.

II. MANDATORY NOTICES

Real Parties-in-Interest: Petitioner identifies the following as the real parties-in-interest: Samsung Electronics Co., Ltd. and Samsung Electronics America, Inc.

Related Matters: The '440 patent is at issue in the following matter(s):

- *Mojo Mobility Inc. v. Samsung Electronics Co., Ltd.*, No. 2-22-cv-00398 (E.D. Tex.) (asserting the '440 patent and also U.S. Patent Nos. 7,948,208, 11,292,349, 11,316,371, 11,201,500, 11,342,777, and 11,462,942) ("Texas Litigation"). (Ex. 1032)
- Petitioner is filing concurrently herewith a petition for *inter partes* review challenging claims 3 and 13 of the '440 patent.

The '440 patent issued from Application No. 13/115,811, which is a continuation of Application No. 11/669,113, and claims priority to four provisional applications (U.S. Provisional Application Nos. 60/763,816 (filed Jan. 31, 2006),

60/810,262 (filed Jun. 1, 2006), 60/810,298 (filed June 1, 2006), and 60/868,674 (filed Dec. 5, 2006)). (Ex. 1001, Cover, 2.)

Counsel and Service Information: Lead counsel: Joseph E. Palys (Reg. No. 46,508), and Backup counsel are (1) Naveen Modi (Reg. No. 46,224), (2) Howard Herr (*pro hac vice* admission to be requested). Service information is Paul Hastings LLP, 2050 M St., Washington, D.C., 20036, Tel.: 202.551.1700, Fax: 202.551.1705, email: PH-Samsung-MojoMobility-IPR@paulhastings.com. Petitioner consents to electronic service.

III. PAYMENT OF FEES

The PTO is authorized to charge any fees due during this proceeding to Deposit Account No. 50-2613.

IV. GROUNDS FOR STANDING

Petitioner certifies that the '440 patent is available for review and Petitioner is not barred or estopped from requesting review on the grounds identified herein.

V. PRECISE RELIEF REQUESTED AND GROUNDS

Claims 1 and 27 should be canceled as unpatentable based on the following grounds:

Ground 1: Claims 1 and 27 are unpatentable under pre-AIA 35 U.S.C. §103(a) as being obvious over *Nakamura*, *Odendaal*, and *Calhoon*.

The ’440 patent (filed May 25, 2011) claims priority via provisional applications dating back to January 31, June 1, and December 5, 2006. PO has stated in the Texas Litigation that the priority date for claims 1 and 27 of the ’440 patent is at least June 1, 2006 (and possibly three months earlier). (Ex. 1032, 6, 8.) For purposes of this proceeding, and without conceding the ’440 patent is entitled to such a date, Petitioner assumes the effective date for the ’440 patent is between March 1, 2006 to June 1, 2006, although the asserted prior art here predates the earliest provisional January 31, 2006 filing date.

Nakamura was filed on September 23, 2004 and published March 31, 2005, *Odendaal* was filed on June 26, 2002 and issued November 1, 2005, *Calhoon* was filed December 12, 2003 and published June 16, 2005, and thus each qualifies as prior art at least under pre-AIA 35 U.S.C. §§ 102(a), 102(e). None of these references were substantively considered during prosecution. (*See generally* Ex. 1004; §X.)

VI. LEVEL OF ORDINARY SKILL

A person of ordinary skill in the art as of the claimed priority date of the ’440 patent (“POSITA”) would have had at least a master’s degree in electrical engineering, or a similar discipline, and two or more years of experience with wireless charging systems, including, for example, inductive power transfer

systems.[1] (Ex. 1002, ¶¶20-21.)[2] More education can supplement practical experience and vice versa. (*Id.*)

VII. THE '440 PATENT

The '440 patent generally relates to an inductive power source and charging system including a base unit with a primary coil and a [mobile] device with a secondary coil. (Ex. 1001, Title, Abstract, 1:35-38, 3:35-67, 4:58-5:56.) During prosecution, in response to repeated rejections demonstrating how the features were disclosed/suggested, the applicant continued to add new features in an attempt to find allowance. (*See, e.g.*, Ex. 1004, 86-112, 114-142,[3] 163-189, 264-299, 320-332,

---

[1] *See* Ex. 1004, 124 (applicant indicated a POSITA may be one with EE training from specific types of universities, *e.g.*, MIT or Columbia). Petitioner disagrees with such a limited/vague and unreasonably narrow definition.

[2] Petitioner submits the declaration of R. Jacob Baker, Ph.D., P.E. (Ex. 1002), an expert in the field of the '440 patent. (Ex. 1002, ¶¶1-13; Ex. 1003.)

[3] The examiner properly noted that "all the claimed elements…were known in the prior art" (Ex. 1004, 109-110, 123-124) and reliance on "a large number of references in a rejection, does not, without more, weigh against the obviousness of the claimed invention." (Ex. 1004, 109-110 (citing *In re Gorman*, 933 F.2d 982 (Fed. Cir. 1991)).)

604-617, 685, 692-694, 1605-1618).) The examiner finally allowed the claims without explanation after amended to recite a "universal base unit" for charging "different" devices. (*Id.*, 53, 95-96.) Nonetheless, such features (and the others) were known and obvious, including a "universal" base unit as claimed. (*Infra* §IX; Ex. 1002, ¶¶22-56, 60-236; Exs. 1005-1011, 1013, 1015, 1019, 1024-1031, 1037-1043.) *See In re Gorman*, 933 F.2d at 986.

VIII. CLAIM CONSTRUCTION

The Board only construes the claims when necessary to resolve the underlying controversy. *Toyota Motor Corp. v. Cellport Systems, Inc.*, IPR2015-00633, Paper No. 11 at 16 (Aug. 14, 2015) (citing *Vivid Techs., Inc. v. Am. Sci. & Eng'g, Inc.*, 200 F.3d 795, 803 (Fed. Cir. 1999)). For purposes of this proceeding, Petitioner believes that no special constructions of the claim terms, other than the term identified below, are necessary to assess whether the challenged claims are unpatentable over the asserted prior art.[4] (Ex. 1002, ¶¶58-59.)

[4] Petitioner reserves all rights to raise claim construction and other arguments, including challenges under 35 U.S.C. §112, in district court as relevant to those proceedings. *See Target Corp. v. Proxicom Wireless, LLC*, IPR2020-00904, Paper 11 at 11–13 (Nov. 10, 2020). A comparison of the claims to any accused products in litigation may raise controversies that are not presented here given the similarities

Claims 1 and 27 each recite a "**means for <u>avoiding overcharging one or both of the mobile device and battery inductively</u>**." (Ex. 1001, 27:25-26, 30:23-24.) The "means for" language lacks sufficient definite meaning as the name for structure, and thus, the term should be construed as a means-plus-function term. *Williamson v. Citrix Online, LLC*, 792 F.3d 1339, 1347-49 (Fed. Cir. 2015).

As such, the identified function is the <u>underlined</u> text above. The corresponding structure identified in the specification includes a battery regulator chip and/or a circuit that measures parameters of a battery (e.g., voltage, degree of charging, temperature, etc.) and uses an internal program to regulate the power drawn from a circuit to ensure overcharging does not occur (where "[t]he circuit could also include LEDs to show the receiver being in the presence of a magnetic field from the charger, complete charge LEDs and/or audible signals") and/or equivalents thereof. (Ex. 1001, 11:8-16.) (*See also* Ex. 1004, 171 (citing ¶0064 (*id.*, 1669)).) *See Default Proof Credit Card Sys., Inc. v. Home Depot U.S.A., Inc.*, 412

---

between the references and the patent. By applying the plain meaning or proposed constructions herein for this proceeding, Petitioner does not concede the claims are definite, have specification support, etc., and thus reserves the right to address any associated §112 issues in other proceedings.

F.3d 1291, 1298 (Fed. Cir. 2005). Further, in the Texas Litigation, PO contends that "[a]t least ***four forms*** of overcharge protection in the accused products satisfy this claim element, individually and combined."[5] (Ex. 1033, 56; Ex. 1032.) Without conceding such structures/forms meet the claimed "means for avoiding overcharging," Petitioner addresses the *four forms* identified by PO and their equivalents. (§IX.A.1(e).)

IX. DETAILED EXPLANATION OF GROUNDS

A. Ground 1: Claims 1 and 27 are unpatentable under § 103(a) as being obvious over *Nakamura* in view of *Odendaal* and *Calhoon*

1. Claims 1 and 27[6]

a) 1(a)/27(a): A [system / mobile device] capable of inductive powering or charging by a universal base unit for charging of different mobile devices and/or batteries of different charging characteristics associated therewith, comprising:

To the extent limiting, *Nakamura* discloses this limitation. (Ex. 1002, ¶¶61-74, 89-107; *infra* §§IX.A.1(b)-(k).) *Nakamura* discloses a "**mobile device**" /

[5] Emphasis is added herein unless indicated otherwise.

[6] Claim 27 substantively tracks claim 1. The differences are represented in yellow-highlight in the claim language for limitations 1(a)-(l)/27(a)-(l).

"**system**"[7] (*e.g.*, device 2/3) in a power charging system (which can also be the "**system**" of claim 27, *e.g.*, including device 2/3 and apparatus 1) that is "**capable of inductive powering or charging by a universal base unit** (*e.g.*, apparatus 1) **for charging of different mobile devices and/or batteries** (*e.g.*, different devices 2/3 and/or their batteries) **of different charging characteristics**." (Ex. 1005, ¶0018 (system includes an apparatus ("**base unit**") with primary side circuit and coil(s) and power reception equipment ("**mobile device**") with a secondary side coil "magnetically coupled to the primary side coil," such that "a single power transmission apparatus ("**universal base unit**") can supply power [inductively] to *different types of power reception equipment*" and batteries with different power/charging requirements ("**charging characteristics**")), FIGS. 1A-2B (below), Abstract, ¶¶0003, 0016-0017, 0044, 0062 ("***battery*** of the portable telephone 2 or the notebook PC 3…***the battery is charged by…magnetic coupling***"), 0063 ("***apparatus 1 can charge even batteries of electronic equipment different in power***…" (e.g., phone 2/PC 3)), 0064, 0065 (transformer formed through "magnetic coupling"), 0110 ("apparatus 1 can *charge various types of equipment...having a*

[7] Reference to the claimed "**mobile device**" in the analysis below thus includes the claimed "**system**," even where the word "**system**" is not repeated.

battery such as **PDAs, digital cameras, camcorders**, or the like"); §§IX.A.1(b)-1(c), §§IX.A.1(g), 1(l); Ex. 1002, ¶¶90-94.)

FIG. 1A

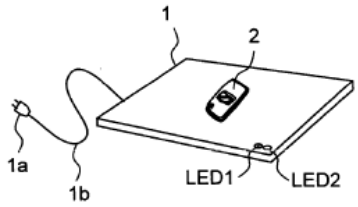

FIG. 1B

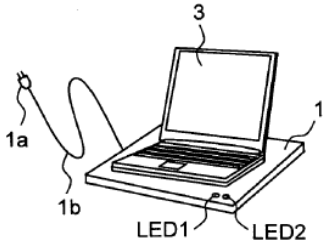

FIG. 2A

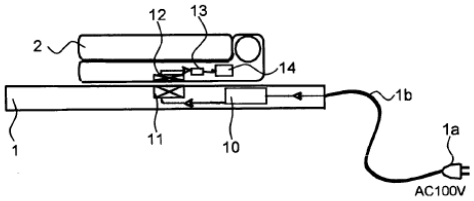

The primary side coil in apparatus 1 can have multiple taps (*e.g.*, FIG. 3) or can include a "plurality of coils each having a different number of turns" (*e.g.*, FIG. 5), which allows the apparatus ("**universal base unit**") to select and provide different levels of power from the apparatus depending on power requirements ("**charging characteristics**") of device 2/3 ("[**mobile**] **device**") via inductive power transfer. (Ex. 1005, ¶0019.)

FIG. 3

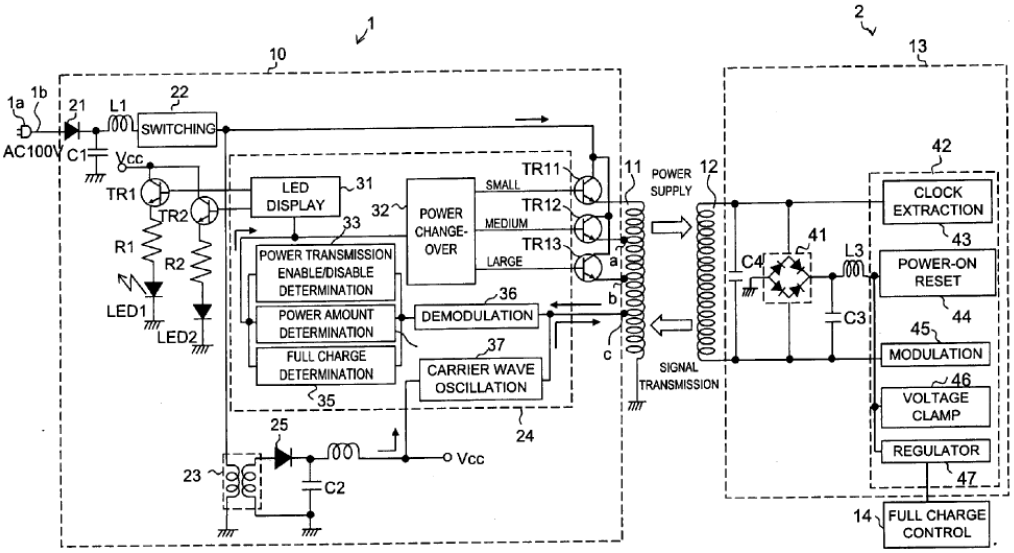

FIG. 5

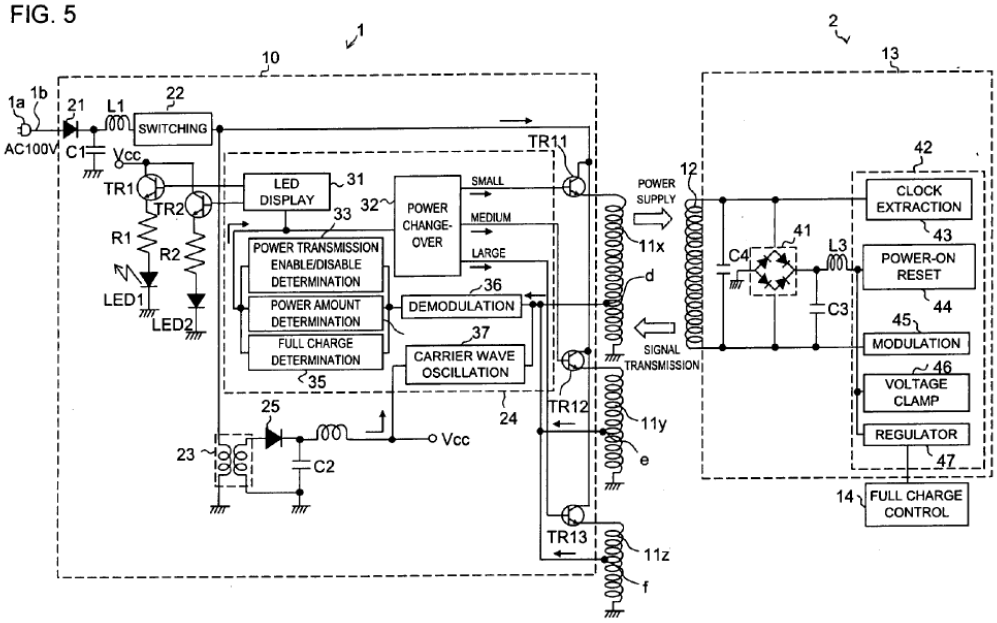

(*Id.*, FIGS. 3, 5; Ex. 1002, ¶95.)

Information signals transmitted from device 2/3 provides charging characteristic information that is used by apparatus 1 to determine the proper power level. (Ex. 1005, ¶¶0077-0078, 0083-0085, 0090, 0091 (transistor is

"selected…according to the level of power to be transmitted determined from the signal containing the '*information on consumed power*' received from the portable telephone 2," which allows "a coil for transmitting power [to] be selected, and *power required for the power reception equipment*"), FIGS. 3-5; Ex. 1002, ¶¶96-97.) Thus, *Nakamura* discloses a "**universal base unit**" (apparatus 1) capable of charging different mobile devices or their respective batteries that each have particular/different "**charging characteristics**." (Ex. 1002, ¶98; *see also* §§IX.A.1(b)-(l).)

Nakamura's discussions of similar components/features/functionalities relate and are applicable to various configurations (exemplified by the figures), which exemplify such a "system"/"device." (Ex. 1002, ¶¶99-107; Ex. 1005, FIGS. 1A-2B, 3, ¶¶0063, 0067 ("same symbols and descriptions thereof will not be given herein"),

0068-0075, 0090 (same symbols and descriptions (FIG. 3) except a "difference" in use of primary side coils 11x/11y/11z), 0091-0092, 0096-0124.)

FIG. 2A

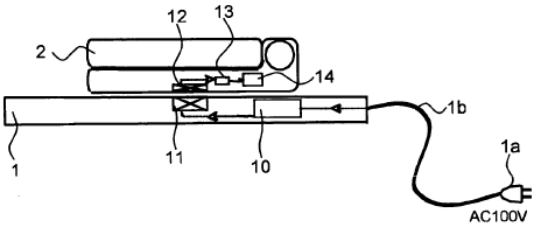

FIG. 2B

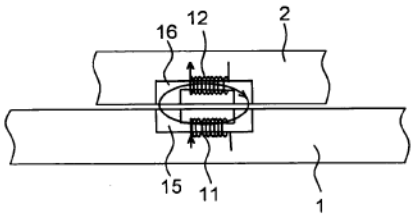

(Ex. 1005, FIGS. 2A-2B; Ex. 1002, ¶103.)

FIG. 3 relates to components/features of apparatus 1 ("**base unit**") that are similar to those for FIGS. 1A, 2A, 2B, and FIG. 5 (*e.g.*, smoothing, rectifier, and switching circuits (L1, C1, 21, 22), transistors TR11-TR13, circuits 33-37, etc.). (Ex. 1005, ¶¶0067-0073, 0090-0092.) *Nakamura* describes similar and applicable components/features associated with device 2/3 ("[**mobile**] **device**") (*e.g.*, rectifier 41, C4, L3-C3, IC 42, clock extraction 43, power-on reset 44, voltage clamp 46, regulator 47, modulation 45, full-charge control 14, etc.) (*Id.*, ¶¶0074-0075.) (Ex. 1002, ¶¶100-102.) The operations associated with FIG. 4 are also applicable to the

various configurations/features (including *e.g.*, FIGS. 3 and 5). (Ex. 1005, FIG. 4 (below), ¶¶0076-0089; Ex. 1002, ¶¶102-105.)

FIG. 4

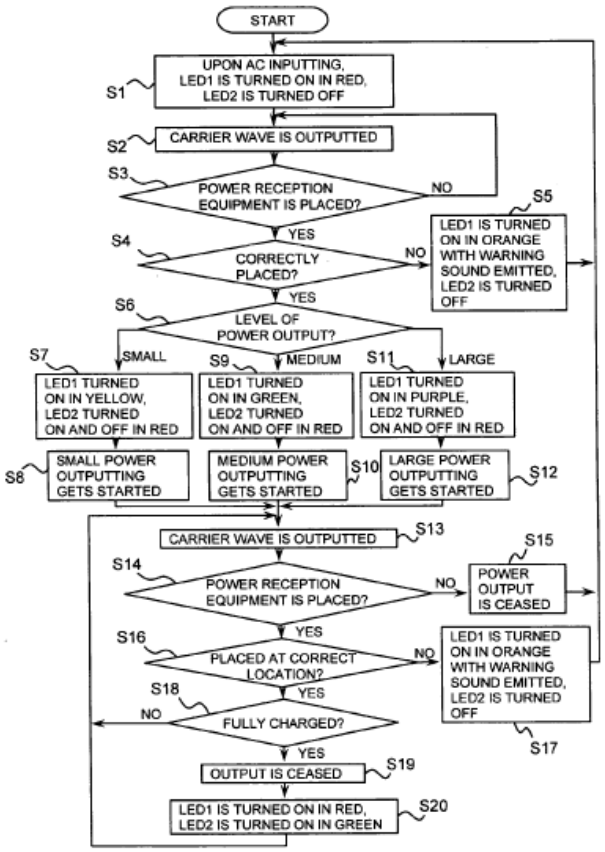

Similarly, the teachings/configurations relating to *e.g.*, FIGS. 6, 8-9, 11A-11B, 12, 13A-13E, 14, 15A-15B, 16-20, 21-25, etc., are also applicable to the various configurations/operations associated with, *e.g.*, FIGS. 3-5. (Ex. 1002, ¶¶106-107; Ex. 1005, ¶¶0080-0081, 0089, 0092-0094, 0102-0124, 0125-0155; *see also* §§IX.A.1(b)-(l).)

b) <u>1(b)/27(b)</u>: a battery, wherein one or both of a [mobile] device and the battery have particular charging characteristics associated therewith;

Nakamura discloses this limitation for the reasons above. (Ex. 1002, ¶¶108-112; §IX.A.1(a).) As explained, *Nakamura*'s "[**mobile**] **device**" contains a battery ("**battery**"), one or both of which have "**particular charging characteristics associated therewith**." (§IX.A.1(a).) While not illustrated, mobile device 2/3 includes a battery. (Ex. 1005, FIGS. 1A-5, 13A-13E, ¶¶0062-0065, 0110; Ex. 1002, ¶109.) As explained, since apparatus 1 is configured to determine/provide a different power/voltage appropriate for the type of device 2/3 to be powered/charged, a POSITA would have understood that device 2/3 and its battery have particular charging characteristics (*e.g.*, a laptop 3 (and battery) has different power/charging characteristics than mobile phone 2 (and battery). (Ex. 1002, ¶¶110-111; §IX.A.1(a); Ex. 1005, Abstract, ¶¶0017-0019, 0063 (apparatus 1 transfers "necessary" power "*depending on the type*" so "batteries of electronic equipment different in power required" can be charged), FIG. 4, 0065 ("voltage applied to primary coil induces voltage across secondary coil (power encompasses voltage), 0076-0091, 0110, Claims 15, 29-30, 35; §IX.A.1(g).)

Nakamura teachings are consistent with a POSITA's understanding that different devices (and their components, *e.g.*, receiver circuitry, battery, etc.) can have different power/charging characteristics (*supra*; Ex. 1002, ¶112; Ex. 1005,

¶¶0005-0008; Ex. 1006, ¶0045), and with disclosures in the '440 patent (*supra*; Ex. 1005, ¶¶0065, 0076-0085, 0091; Ex. 1001, 8:38-42 ("Each mobile device and its battery has particular ***characteristics*** (***voltage***, capacity, etc.)"), 8:66-9:9, 9:40-45, 10:7-12, 20:58-64), and further with PO's contentions, which point to power/voltage requirements of devices/batteries for the claimed "**charging characteristics**" (Ex. 1033, 11-21, 80-84 ("Maximum received power" (*id.*, 11-14, 80-81), "Nominal Voltage"/"Limited Charge Voltage" (*id.*, 17)).

c) <u>1(c)/27(c)</u>: a receiver and receiver coil, for one of inductively powering the device or charging the battery in the [mobile] device, wherein the receiver is one of attached to or incorporated into the battery or the [mobile] device, and wherein the receiver coil has a generally planar shape so that a magnetic field received in a direction substantially perpendicular to the plane of the receiver coil is used to inductively generate a current in the receiver coil;

Nakamura in view of *Odendaal* discloses/suggests this limitation. (Ex. 1002, ¶¶113-141; §§IX.A.1(a)-(b).)

The '440 patent discusses a "receiver" in various non-limiting ways. (*E.g.*, Ex. 1001, FIGS. 2, 6-7, 9, 3:43-67, 4:15-18, 5:4-35, 7:8-26, 8:47-59, 10:22-39 ("a receiver for a mobile phone…can be a coil…"), 10:44-11:4, 11:5-6 ("receiver can also contain rectifier(s) and capacitor(s) to produce a cleaner DC voltage"), 11:34-44, 12:20-26, 12:48-49 ("the receiver (i.e., circuitry)"), 13:1-3 ("*regulator in the receiver* can then regulate the current and the load…"), 13:44-54, 13:55-14:7

("receiver may be a component (such as a shell)…the receiver (shell)…"), 14:37-45.) *Nakamura* teachings are consistent with the plain claim language in context of the '440 patent. (Ex. 1002, ¶114.)

Nakamura discloses "**a receiver and receiver coil**" in different ways. *Nakamura*'s "[**mobile**] **device**" 2/3 contains a secondary coil 12 ("**receiver coil**") and components that are examples of the claimed "**receiver**" as discussed below. (§§IX.A.1(a)-(b); *e.g.*, Ex. 1005, FIGS. 1A-2B, 3-6, ¶¶0016-0022, 0062-0067, 0074-0075, 0076-0089, 0090-0092; Ex. 1002, ¶115.)

As exemplified in the non-limiting annotated figures below, *Nakamura*'s mobile device 2/3 includes a secondary coil 12 (purple below) and a "**receiver**" as, for example, **(1)** secondary side circuit 13 (with or without regulator 47)[8] (*e.g.*, shown left-red below without regulator 47), **(2)** circuit 13 (with or without regulator 47) collectively with charge control 14 (*e.g.*, shown middle-red below without

[8] As noted, the '440 patent describes embodiments where a "regulator" is "in the receiver" (Ex. 1001, 13:1-3), and thus the alternate *Nakamura* mappings herein that encompass a "**receiver**" with regulator 47 and those including regulator 47 for the claimed "**regulator**" (limitation 1(f)/27(f)) and others are consistent with the '440 patent descriptions.

regulator 47), or **(3)** other circuitry/components in circuit 13 (*e.g.*, one or more of capacitor C4, rectifier 41, inductor L3, and/or capacitor C3 (*e.g.*, shown right-red below)).[9] (*Id.*)

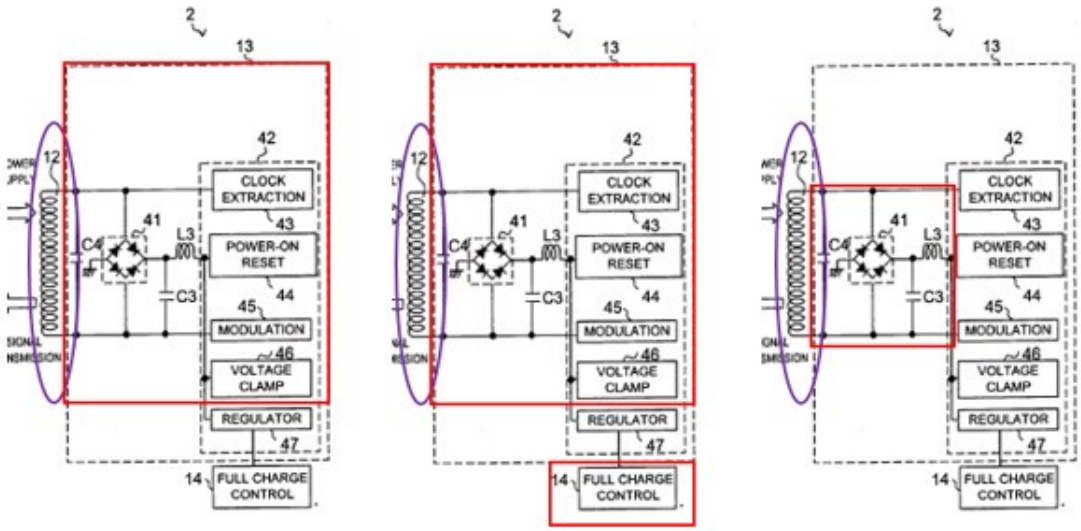

[9] The annotated figures here (and below) are exemplary visual aids and are not intended to define precise boundaries/schematics, or limit/constrain the prior art mappings/analysis (alone or as modified). Other components/circuitry, etc. not shown but included in device 2/3 as described/suggested by *Nakamura* (alone or as modified herein) would have been contemplated portions of such mappings. For example, *Nakamura*'s figures do not show a battery, but it is part of device 2/3. (§IX.A.1(a)-(b).) Other figures in *Nakamura* are equally applicable with such mappings (*e.g.*, FIGS. 1A-2B, 3, 6, 8-9, 13A-25). (§IX.A.1(a).)

(Ex. 1005, FIG. 3 (annotated).)

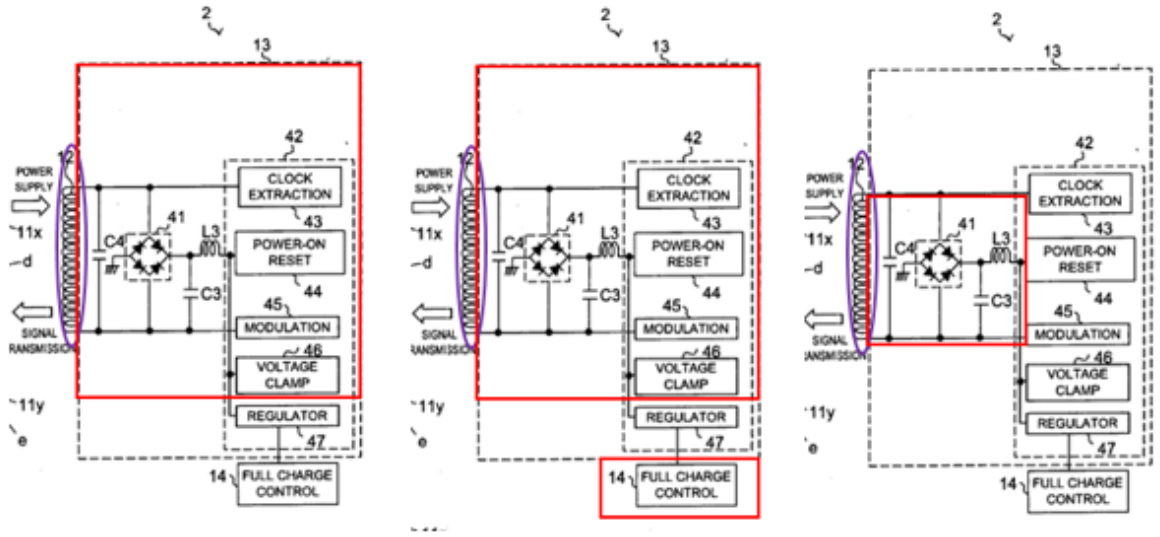

(*Id.*, FIG. 5 (annotated); Ex. 1002, ¶116.)

The above-identified "**receiver and receiver coil**" are "**attached to or incorporated into the battery or the [mobile] device**" and are used for inductively powering/charging device 2/3 or its battery via magnetic coupling ("**for one of inductively powering the [mobile] device or charging the battery in the [mobile] device**"). (§§IX.A.1(a)-(b), IX.A.1(d)-(l); Ex. 1002, ¶117.) As explained, *Nakamura* explains coils 11 and 12 "constitute a transformer through magnetic coupling…wherein when the pulse voltage…is applied across the primary side coil 11, *a voltage is induced across the secondary side coil 12 by magnetic coupling*" that "is rectified…and smoothed in the secondary side circuit 13" and then "supplied

to a charge control circuit 14" for "charg[ing] a battery," and thus performing "a non-contact power supply…from…apparatus 1 to the portable telephone 2." (*Id.*; Ex. 1005, ¶0065; *id.*, Abstract, ¶¶0018-0019, 0062-0064, 0074, 0082-0091, FIGS. 2A-5; Ex. 1002, ¶117.) Thus, both the "receiver and receiver coil" discussed above is attached to or incorporated into the battery or the device 2/3. (*Id.*)

Nakamura discloses "**a magnetic field** [is] **received in a direction substantially perpendicular to the plane of the receiver coil** [and] **is used to inductively generate a current in the receiver coil**" including as modified below. (Ex. 1002, ¶118; *supra*.) A POSITA would have understood that by receiving power/voltage via magnetic coupling (*e.g.*, between the primary and secondary coils (*supra*; Ex 1005, ¶¶0018 ("magnetically coupled" coils), 0062, 0065, 0077-0080, 0090-0091, FIGS. 3-5, Abstract, Claim 2; §IX.A.1(a))), a magnetic field is received and current is inductively generated in the secondary coil 12, consistent that known in the art. (Ex. 1005, ¶¶0065 ("voltage [and thus current] is *induced across the secondary side coil 12* by magnetic coupling…"), 0076-0087, 0090-0091; Ex. 1002, ¶119; Ex. 1006, ¶¶0022 ("Current flows through the source coil and the resulting magnetic flux induces an alternating current through the magnetic field and across the receiver coil, completing an energy transfer circuit."), 0031; Ex. 1009, 2:62-3:8, 1:54-2:18, 3:20-4:11, FIGS. 1-3; Ex. 1010, FIGS. 1-5B, 8:55-9:52 ("as is *well known by those skilled in the relevant art*, primary coil 510 *induces a current to flow in*

secondary coil 230"), FIGS. 6A-10, 7:21-8:54, 9:53-10:22, 11:27-14:67; Ex. 1029, 3-4, 27-50.)

A POSITA would have understood that the magnetic field received that is used to inductively generate a current in the receiver/secondary coil 12 is "**in a direction substantially perpendicular to the plane of the receiver coil**." (*Id.*; above citations to Ex. 1005; §§IX.A.1(a)-(b); Ex. 1002, ¶120.) *Nakamura*'s FIG. 2B (annotated below) discloses a magnetic field (blue) that is generated by the inductive/magnetic coupling between coils 11 and 12 that is perpendicular (green) to a plane (red) of secondary coil 12 ("**receiver coil**") consistent with known contactless/inductive power/data transfer configurations. (Ex. 1002, ¶120-121.)

FIG. 2B

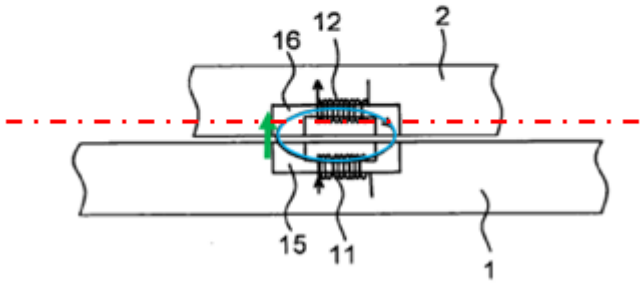

(*See, e.g.*, Ex. 1005, Abstract, ¶¶0018, 0062, 0065, 0079 (power transmission efficiencies relating to the position of device 2/3 to apparatus 1 where "a high coupling degree in magnetic coupling is established"), 0080-0082 ("highest coupling degree in magnetic coupling" occurs with 0 mm positional/alignment

deviations in left-right and forward-rearward directions), FIGS. 11A-11B, 0090-0091; Ex. 1011, 557-562, 593-594, 601; Ex. 1009, 2:62-3:8 ("when magnetic field lines are approximately 90 degrees to the first part of the transformer when the receiving coil and core are placed within the field, current is inducted into the computing device 18"), 1:54-2:18, 3:20-4:11, FIGS. 1-3; Ex. 1010, FIGS. 1-5B, 8:55-9:52 (magnetic field represented by arrows 564 and 565 is generated that is perpendicular to plane 520 of charger and secondary coil 510), FIGS. 6A-10, 7:21-8:54, 9:53-10:22, 11:27-14:67; Ex. 1029, 3-4, 27-50, Ex. 1004, 1311-1386, 1363-1365.) Such features are also disclosed/suggested in the modified *Nakamura* device discussed below. (Ex. 1002, ¶121.)

While *Nakamura* does not expressly disclose that the receiver/secondary coil 12 "**has a generally planar shape so that a *magnetic field* received in a direction *substantially perpendicular to the plane of the receiver coil***," a POSITA would have found it obvious to configure the *Nakamura* system to implement/use planar coils for the receiver/secondary-side (and also primary-side) in light of *Odendaal*'s teachings/suggestions, complemented by POSITA's knowledge in the art. A POSITA would have been motivated to consider/implement planar coils to facilitate and/or expand the versatility of applications contemplated by *Nakamura*, which utilize thin form factor, compact, and/or planar-type designs/arrangements (*e.g.*, thin/compact cellphone/laptop 2/3, apparatus 1 embedded in the surface of host

objects (*e.g.*, desk/table/locker/shelf/dashboard/mat/floor/rug), etc.). (Ex. 1002, ¶122.)

A POSITA was aware of different types of inductive coil designs/options available to achieve desired applications of inductive power/data transfer between devices, including the related circuitry, tradeoffs, benefits/advantages, etc. associated with their use. (*Id.*, ¶122.) For example, planar coils were known, as were their characteristics and design techniques implementing circuits/systems/devices that use them to achieve desired contactless/inductive power/data transfer. (*Id.*, ¶¶123-127; Ex. 1027, 1-3 (planar spiral inductor); Ex. 1015, FIGS. 1-2, 3-4, 7-12, Abstract, 1:5-2:29, 2:64-3:27, 3:39-51 (thin coil, flat disc-like core), 5:5-47, 5:48-9:5; Ex. 1007, FIGS. 1-3, 6, 8A-9, ¶¶0002, 0006-0007, 0018-0025-0034; Ex. 1025, FIGS. 1, 3, 8-9, 13, 1:10-2:3, 2:5-12 (reasons to consider thin coil designs), 2:14-3:2, 4:19-32, 7:25-9:28, 12:27-32 (very thin printed coil), 14:4-17; Ex. 1026, FIGS. 1-2, 5 (conventional primary coil array arrangement), 9A-9C, Abstract, 1:3-4:4 (conventional designs), 4:6-9:4, 11:4-15 (concentric selectively active flat coils); Ex. 1009, Abstract, FIGS. 1-3, 1:4-51, 1:54-2:26, 2:47-3:8 (flat configurations), 3:9-39 (thin flat coil), 4:18-60); Ex. 1024, FIGS. 3, 8-9, 1:12-15, 1:39-2:29, 9:41-53, 10:45-57, 11:60-13:4; Ex. 1028, Abstract, FIGS. 2-7, ¶¶0001, 0004-0007, 0025-0032, 0041; Ex. 1029, 1-4, 9-19 (planar, spiral coils);

Ex. 1030, FIGS. 3-7B, 1:5-9, 1:59-61, 3:19-56, 4:62-567, 5:25-44; Ex. 1004, 870-928, 1010-1045, 1071-1104, 1311-1386, 1387-1454.)

A POSITA would have leveraged such knowledge when considering design/implementation options for the *Nakamura* system/device (including device 2/3, apparatus 1), and appreciated how various coil designs (including planar coils) would have improved the system/device based on given applications taking into account factors, such as size/weight, cost, efficiencies/performance, application, etc. (Ex. 1002, ¶128; Ex. 1007, ¶0033.) A POSITA would have considered potential tradeoffs/benefits provided by planar coils when contemplating ways to design/implement mobile device 2/3 / apparatus 1. (Ex. 1002, ¶128.) One source of such relevant guidance is *Odendaal*.

Odendaal is in the same field of endeavor as the ’440 patent and *Nakamura* given it also describes a system for powering/charging a mobile device/battery using inductive/contactless power transfer techniques/technologies. (§§IX.A.1(a)-(b); Ex. 1002, ¶¶129-130; Ex. 1008, Title, Abstract, FIGS. 1A-4, 11-12, 1:5-3:57, 4:50-5:8, 5:24-28, 6:59-64.) *Odendaal*, like *Nakamura*, also discloses features that were reasonably pertinent to one or more particular problems the ’440 patent inventor was trying to solve. (*Id.*; *e.g.*, Ex. 1001, 3:35-3:67; Ex. 1005, FIG. 5, ¶¶0006-0007, 0020, 0062-0094, 0096, 0102-0124; Ex. 1002, ¶130.) Such teachings thus would have been consulted by the inventor and a POSITA, looking to address/solve such

issues/problems and others relating to the design/implementation of a contactless/inductive charging system, including those described by *Nakamura*. (Ex. 1002, ¶130.) Thus, a POSITA would have consulted teachings/suggestions like those in *Odendaal* and consequently would have been motivated to modify the above-discussed mobile device 2/3 (and apparatus 1) to include planar (receiver/primary) coils to provide features like those discussed herein and claimed. (*Id.*)

Odendaal discloses the known use of planar-type inductor coils in a contactless/inductive power transfer system that transfers power via magnetic coupling for, *e.g.*, charging a battery of a cellphone, computer, wearable items, etc. (Ex. 1008, FIGS. 1A-1B, 2A, 2C, 8E, 1:5-3:57.) *Odendaal* explains it would be advantageous to provide a planar resonator for wireless power transfer that exhibits characteristics of an integrated inductor-capacitor transformer. (*Id.*, 1:53-57.) The planar resonator includes a coil arrangement where spirals arranged on opposite sides of each other can be used for energy transfer "so that a battery of a cellphone could be charged without physical wires connecting the cellphone to a charger." (*Id.*, 1:60-67.) Depending on the physical arrangement and/or material used, the planar resonator "transfer[s] power across the 'interface-of-energy-transfer' (IOET) ***in either an electric or magnetic form, or both***." (*Id.*, 2:1-7.) Thus, while *Odendaal* discusses capacitive-type energy transfer, "[t]he physical arrangement and/or material can *permit transformer action with or* ***without*** [such] capacitive energy

transfer." (*Id.*, 2:7-10; *id.*, 2:65-3:5 (signal transfer between spiral coils "***by coupling of magnetic flux***"), 4:44-5:8, 6:1-18 (air coil transformer); Ex. 1002, ¶¶131-132.) *Odendaal* explains that the planar coils of the planar power resonator "may have a thin and/or relatively flat top coil surface" and may have coils arranged in upper and lower configurations "with an air gap." (Ex. 1008, 2:44-54.) "The spiral-shaped conductor may comprise ***pcb spiral-wound conductors***" and "a battery charging circuit can be coupled to one of the first and second spiral shaped conductors, and load can be coupled to the other…" where "coupling between the battery charging circuit and the battery may comprise…***and/or magnetic coupling, wherein power is transferred by the coupling of…and/or magnetic flux across the IOET***." (*Id.*, 2:55-64; Ex. 1002, ¶133.) Accordingly, *Odendaal* discloses inductive/contactless power system designs/configurations that use planar coils in a power receiving unit (*e.g.*, cellphone) and power transmitting unit for charging the receiving unit's battery (Ex. 1008, 1:60-67, 2:55-3:5), consistent with that known in the art. (Ex. 1002, ¶134; Ex. 1008, 1:23-31, 2:29-44, 3:65-67 (spirals arranged within substrate material); state-of-art evidence above.)

Upon considering *Odendaal* in context of *Nakamura* and the state-of-art knowledge, a POSITA would have been motivated, and found obvious, to modify the *Nakamura* system to use a planar "**receiver coil**" in the "[**mobile**] **device**" (as well as complemented such a design with corresponding planar primary coil(s) in

apparatus 1) to increase the versatility in the designs/arrangements compatible with the thin-form applications contemplated by *Nakamura* (some illustrated below) and expand the applications of *Nakamura*'s configurations implementing different types of power reception equipment (*e.g.*, device 2/3) and inductive power transmission apparatus arrangements. (Ex. 1002, ¶135; Ex. 1005, FIGS. 1A-2B, 8-9, 13A-15B, 18-20, ¶¶0062-0075, 0090-0094, 0096-0156; §IX.A.1(a).)

FIG. 1A

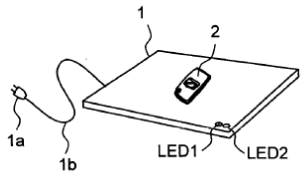

FIG. 1B

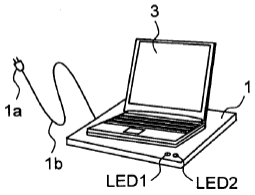

FIG. 8

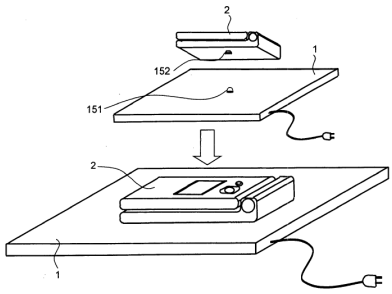

FIG. 13B

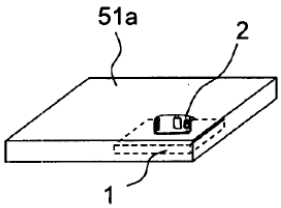

FIG. 13C

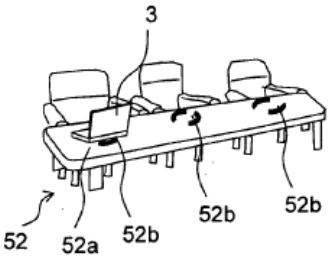

FIG. 13E

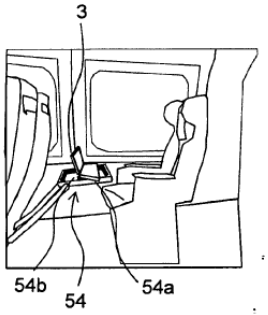

FIG. 14

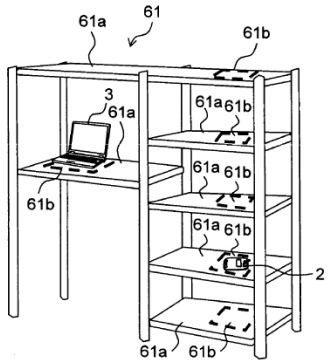

FIG. 18

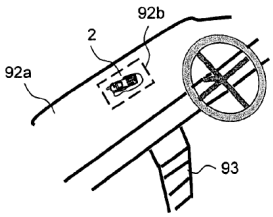

FIG. 19

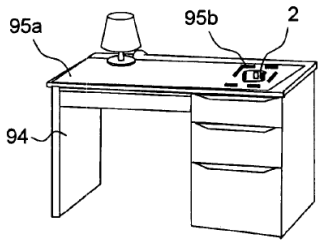

A POSITA would have been motivated by *Odendaal*'s teachings/suggestions (in context with their state-of-art knowledge) to configure the secondary coil 12 (and primary coil(s) 11) as planar coils to expand the applications and features of *Nakamura*'s contactless/inductive power/charge transfer systems/device. (Ex. 1002, ¶¶135-137; Ex. 1008, 2:16-28 ("…a planar configuration for transferring power with isolation properties…[with] two separable structures on either side of the IOET, such as, for example, a cellphone and its charger" where "no electrical contacts necessary at the IOET" and "[t]he physical structure may include a set of spiral coils on each side of the IOET, typically with each spiral being a conductor trace on a separate substrate, such as flex or printed circuit board (FR-4)."), 2:29-44 (applications with wearable electronics such as radio, cellphone, and computer), 3:65-67.)

Indeed, *Nakamura*'s FIGS. 2A and 9 depict a receiver/secondary coil in a portable phone/cellphone 2 being placed near its back panel, and thus thickness of the receiver/secondary coil affects the thickness of the phone. (Ex. 1002, ¶138.) Similarly, *Nakamura*'s exemplary applications (*e.g.*, §IX.A.1(a); Ex, 1005, FIGS.

1A-2B, 8-9, 13A-20) depict apparatus 1 embedded in thin planar-type host units, and thus reduced thickness of the primary coil(s) would have benefited the corresponding thickness/profile of apparatus 1 and its integration with such hosts. (Ex. 1002, ¶138.)

A POSITA would have thus been motivated to modify *Nakamura*'s configurations with planar coils to provide options with thin and/or more compact power reception equipment (*e.g.*, device 2/3)/power transmission apparatus (*e.g.*, apparatus 1), consistent with features contemplated by *Nakamura*. (Ex. 1005, ¶¶0070 ("IC 24" of apparatus 1 "is an IC including [circuits 31-37], and ***takes on a shape of an IC chip for achieving a compact and lower-profile shape***"), 0075 ("IC 42 is in the shape of an IC chip so that ***a compact and lower-profile shape of the portable telephone 2 is achieved***"); Ex. 1002, ¶138.) Moreover, a POSITA would have appreciated that complementing secondary-side planar coil(s) with primary-side planar coil(s) would have provided for efficient energy transmission between the charger and receiver devices, especially where the coils were aligned to allow the perpendicular magnetic field generated by the primary coil(s) to be efficiently received by the receiving coil(s). (Ex. 1002, ¶¶53, 139.)

A POSITA would have been motivated and found obvious to design the modified system/device with planar coils that would increase coupling areas between primary and secondary/receiver coils to improve efficiency/effectiveness of

inductive power transfer. (Ex. 1005, ¶¶0079-0082; Ex. 1002, ¶139.) This would have been particularly beneficial in configurations contemplated by *Nakamura* where apparatus 1 is embedded in host objects with larger surfaces (e.g., desks/tables/shelves/floors/carpets, etc.) where a user would wish to place the mobile device in different parts of such surfaces for inductive charging. (Ex. 1005, ¶0159; Ex. 1002, ¶139.)

Implementing planar coils in device 2/3 (and apparatus 1) as discussed above would have predictably resulted in the *Nakamura-Odendaal* system/device to include features and perform functionalities like those described by *Nakamura* and discussed above and consistent with known planar coil inductive power transfer configurations, including *e.g.*, where the receiver/secondary planar coil receives "**a magnetic field received in a direction substantially perpendicular to the plane of the receiver coil [that] is used to inductively generate a current in the receiver coil**," for reasons explained. (*Supra*; Ex. 1002, ¶140; *see above regarding* Exs. 1006-1007, 1009-1011, 1015, 1024-1030.) Indeed, consistent with known coil designs where primary and secondary coils face each other and with *Nakamura*'s teachings (Ex. 1005, ¶¶0079-0083), a POSITA would have been motivated to configure the modified system such that when the primary planar coil(s) is/are aligned with the (planar) secondary coil in the modified *Nakamura* system to maximize magnetic coupling (energy transfer), a substantially perpendicular

magnetic field relative to the plane of the receiver/receiver coil would be received by the planer receiver coils from the planar primary coil(s). (Ex. 1002, ¶140.) Other disclosed features would have been included in the *Nakamura-Odendaal* system (including as further modified below) for reasons explained. *(Id.*; §§IX.A.1(a)-(l).)

A POSITA would have had the skills, knowledge, and rationale in light of the teachings/suggestions of *Nakamura*, *Odendaal*, and a POSITA's state-of-art knowledge, to implement the above-modification (taking into account design tradeoffs/techniques/technologies) with a reasonable expectation of success. (*Id.*, ¶141.) A POSITA would have known how to configure the modified system/device such that it operated as intended consistent with *Nakamura*'s teachings/designs. (*Id.*) Implementing the above-modification would have involved applying known technologies (*e.g.*, planar coils and related circuitry (*e.g.*, *Odendaal* and state-of-art evidence above)) with wireless/inductive power transfer/charging systems (*Nakamura*, *Odendaal*) according to known methods (*e.g.*, using planar-type coils to transfer/receive power/data that form substantially perpendicular magnetic field lines similar to known coil designs) to yield the predictable result of providing a thin form factor/"compact and lower-profile shape" (Ex. 1005, ¶¶0070, 0075) "[mobile] device"/apparatus 1consistent with that contemplated by *Nakamura*. (Ex. 1002, ¶141.) *KSR Int'l Co. v. Teleflex Inc.*, 550 U.S. 398, 416 (2007).

d) <u>1(d)/27(d)</u>: an identification component associated

with the [mobile] device or battery, which is configured to provide wireless identification of the receiver to the universal base unit;

Nakamura in view of *Odendaal* and *Calhoon* discloses/suggests this limitation. (Ex. 1002, ¶¶142-163; §§IX.A.1(a)-(c).) *Nakamura* discloses identifying a mobile device (including its "**receiver**" (§IX.A.1(c)) as "power reception equipment" that is capable of receiving power from apparatus 1 ("**base unit**") based on information communicated from the device that is used by apparatus 1 to determine/recognize whether the device is present and properly aligned/positioned for high degree of magnetic coupling for efficient power transfer. (§§IX.A.1(a)-(c); Ex. 1005, FIGS. 3-5, ¶¶0077-0082, 0078 ("power transmission enable/disable determination circuit 33 determines whether or not power reception equipment is placed on the power transmission apparatus 1, based on the '*code indicating being power reception equipment*'"), 0090-0091.) (Ex. 1002, ¶143.) *Nakamura* also discloses applications where "equipment ID of the portable telephone 2[] recorded in the portable telephone" can be wirelessly provided (*e.g.*, to apparatus 1) and used to identify/verify/authenticate the device 2 to facilitate mobile payment processes. (Ex. 1005, ¶0149; *id.* (personal information [equipment ID] "***are also*** accessed through a server 5…"); *id.*, ¶¶0148-0150, 0151 (equipment ID of device 2 is recorded into computer of the railway company connected to server 5 after device 2 is "placed at a predetermined po[r]tion of the ticket dispenser in which…apparatus

1 is embedded" and a button is selected on the dispenser), FIGS. 21-22, 25-26, ¶¶0125-0141, 0147-0153; Ex. 1002, ¶¶144-145.) A POSITA would have understood such features to include the device providing the equipment ID information to facilitate the verification of payment processes. (*Id.*; Ex. 1002, ¶145.)

Thus, *Nakamura*'s device 2/3 contains mechanisms/component(s) that are configured to wirelessly provide identification of and/or information associated with the device (and thus its components, including its "receiver"-related circuitry and/or battery), such as ID information and/or *e.g.*, "codes" ("power reception equipment" code). (*Supra*; §§IX.A.1(a)-(c), IX.A.1(e)-(l); Ex. 1002, ¶146.) However, *Nakamura* does not expressly disclose "**an *identification component* associated with the mobile device or battery, which is configured to provide wireless *identification of the receiver to the universal base unit*.**" (*Id.*) Nonetheless, a POSITA would have found it obvious to configure the *Nakamura-Odendaal* system to implement such features in view of *Calhoon*. (Ex. 1002, ¶147.)

Calhoon discloses an inductive charging system that transfers energy by inductively coupling a source coil on a power source to a "receiver coil" for a battery charger/battery pack of a mobile device (power receiver), and other features relating to such a system (*e.g.*, detection/identification/verification/authentication of the power receiver). (Ex. 1006, Abstract, FIGS. 2-3 (below), ¶¶0002, 0008-0010, 0022-0027, 0029, 0045-0048, 0065; Ex. 1002, ¶148.)

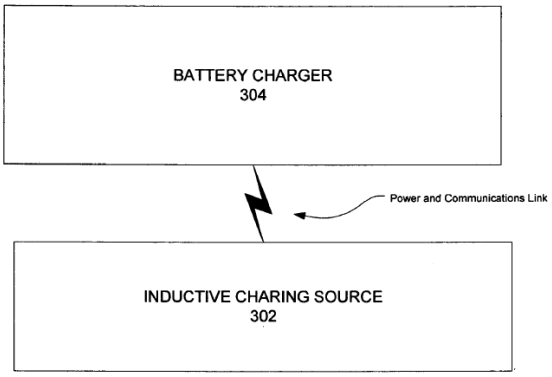

FIGURE 2

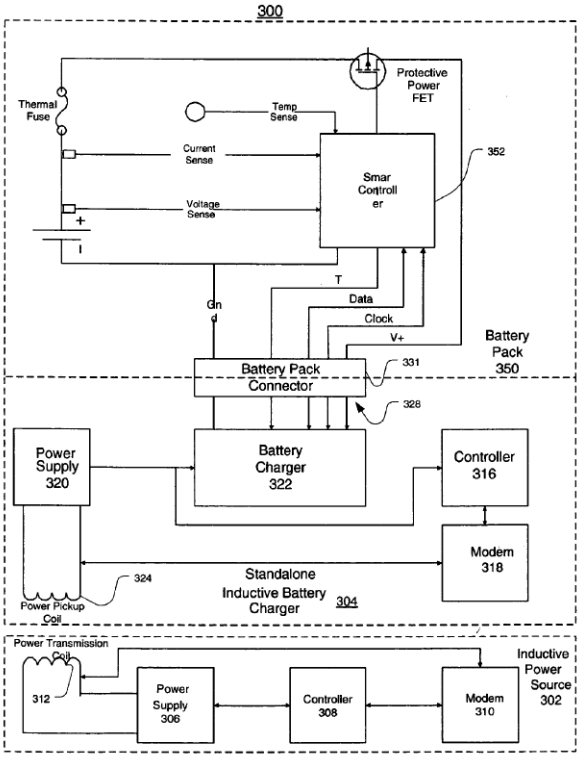

FIGURE 3

Calhoon describes obtaining an ID/serial number (and other information, *e.g.*, security certificate, digital signature) of an inductive power receiver such as a battery charger (*e.g.*, battery charger assembly 304) or a battery (*e.g.*, battery pack 350) and wirelessly communicating that information to an inductive power source (e.g.,

inductive charging source 302) ("**universal base unit**" (like *Nakamura*'s) that is capable of powering/charging different mobile devices/batteries). (Ex. 1006, Abstract, ¶¶0022, 0033-0034, 0045-0049, 0050-0052, 0056, FIGS. 3, 5A, 6; Ex. 1002, ¶149.) *Calhoon* explains controller 316 in battery charger 304 may include data, "such as a battery charger ID number, serial number, manufacturer's name and date of manufacture," which can be used "for novel power operations according to aspects of the present invention, such as shown in FIGS. 5A, 5B, and 6." (Ex. 1006, ¶0042; *id.*, FIGS. 5A-6, ¶¶0034, 0043-0044, 0045-0048, 0049 ("battery pack ID of each battery pack may be stored with the charging requirements"), 0050-0051, 0052 ("if [charger] 304 is authenticated in view of the [security] certification or [digital] signature, the source 302 supplies the requested voltage and power"), 0056.) Indeed:

> [T]he **source 302** may request information or charging parameters from the **battery charger assembly 304**, such as the required charging voltage and maximum power requirement. Nevertheless, the **inductive charging source 302** can request other information relevant to the **battery charger assembly 304**, such as a **battery charger identification (ID) number**, battery type chemistry of the battery pack, or **serial number of the battery charger** or the **serial number of the battery pack**. *This information can be used for* ***security, data integrity, or other purposes***. In process block 508, the **battery charger assembly 304 transmits the requested information**.

(*Id.*, ¶0047; Ex. 1002, ¶150.)

A POSITA would have thus understood that *Calhoon*'s inductive power receiver includes an **identification component** that is associated with the mobile device/battery "**configured to provide wireless identification of the receiver** (*e.g.*, power receiver ID/serial number, etc.) **to [a] universal base unit**." (Ex. 1002, ¶¶151-152.) Indeed, components configured to store, obtain, and transmit such information in power receiver (*e.g.*, assembly 304 component(s), such as one or more of modem 318, controller 316, nonvolatile storage, connector 328, etc.) function as an "**identification component**" given the information can be wirelessly transmitted "for security, data integrity, or other purposes." (Ex. 1006, ¶0047; *id.*, FIGS. 3-5A, ¶¶0036-0037, 0040-0043.)

A POSITA would have had reasons to review/consider the above-discussed teachings of *Calhoon* given it is in the same field of endeavor as *Nakamura* and *Odendaal* (and '440 patent), and their teachings are compatible. For example, *Nakamura*, *Odendaal*, and *Calhoon* all concern wireless/inductive powering/charging (by a base unit) of a mobile/portable device. (*See* above citations to *Nakamura*, *Odendaal*, and *Calhoon* and §§IX.A.1(a)-(c); *e.g.*, Ex. 1008, 1:5-3:5; Ex. 1006, ¶¶0022, 0029; Ex. 1002, ¶153.) Indeed, *Nakamura* and *Calhoon* both describe transmitting information used by a base unit to control/manage power transfer to a mobile device (based on *e.g.*, power requirements/charging parameters,

identification information, etc.). (*Supra*; §§IX.A.1(a)-(c); Ex. 1006, ¶¶0034, 0047-0048, 0050, FIGS. 3, 5A, 6; Ex. 1002, ¶153.) Moreover, like *Nakamura*, *Calhoon* discloses features reasonably pertinent to particular problems the '440 patent inventor was trying to solve (*e.g.*, a "need" for powering portable/mobile devices for use in different "applications" (Ex. 1001, 1:42-64; *id.*, 1:35-3:67)). *Calhoon* and *Nakamura* also contemplate commercial applications like that considered in the '440 patent. (*Id.*, 1:42-43; Ex. 1006, ¶¶0003-0010, 0050; Ex. 1005, ¶¶0110, 0147-0151.) Thus, *Calhoon* would have been consulted by the inventor and a POSITA, looking to address/solve similar issues/problems and others relating to the design/implementation of a contactless/inductive charging system. (Ex. 1002, ¶154.)

Thus, when contemplating designing/configuring/implementing a system like *Nakamura-Odendaal*, a POSITA would have consulted teachings/suggestions like that in *Calhoon* and (consequently) been motivated to modify the *Nakamura-Odendaal* system to include features like those discussed herein and recited in claims 1/27. (*Id.*, ¶155.)

A POSITA would have recognized the benefits of such identification features and thus been motivated to configure device 2/3 in the *Nakamura-Odendaal* system to include an identification component that performs similar features, such as provide wireless identification of the "**receiver**" (§IX.A.1(c)) to apparatus 1 ("**base unit**"). (Ex. 1002, ¶156.) Given the similar features provided by both *Nakamura*

and *Calhoon* (*e.g.*, inductively charging/powering different types of devices, modulation/wireless transmission of information/codes used to control power to particular identified/verified devices, etc.), a POSITA would have had reasons to configure/modify *Nakamura*'s device 2/3 with a component/circuitry/mechanism ("**identification component**") configured to wirelessly provide identifying information (*e.g.*, ID/serial number (or similar identifying information)) associated with the above-identified "**receiver**" (§IX.A.1(c)) to apparatus 1 using the inductive transfer mechanisms described by *Nakamura*. (Ex. 1002, ¶156.) For example, a POSITA would have considered designs/implementations that modify or complement components in the above-modified *Nakamura* mobile device 2/3 that are associated with obtaining/generating/transmitting information signals (*e.g.*, "code indicating being power reception equipment") to apparatus 1 and/or those associated with maintaining/providing the equipment ID of the device (*e.g.*, Ex. 1005, ¶¶0148-0151) with a component/mechanism that facilitates the provision of such device/receiver identifying information to apparatus 1 for identification/verification/authentication/security, etc. purposes, consistent with that taught by *Nakamura* and *Calhoon*. (Ex. 1002, ¶157.) A POSITA would have recognized that such a modification would have beneficially allowed apparatus 1 to identify, detect, verify, authenticate, and otherwise ensure an authorized/recognized/authenticated and properly detected and positioned/aligned

mobile device is present to receive power at an appropriate level, consistent with the teachings/suggestions of *Nakamura* and *Calhoon*. (Ex. 1005, ¶¶0077-0078, FIGS. 3-5; Ex. 1006, Abstract ("provide for authentication of devices that are allowed by the source to be powered or otherwise charged"), ¶¶0022, 0034, 0046-0048, 0050-0052, FIGS. 3, 5A, 6; Ex. 1002, ¶157.)

Indeed, a POSITA would have found rationale/motivation for the above-modification (*e.g.*, authentication/identification/verification/confirmation features with an "identification component" in *Nakamura-Odendaal* system/device) given *Nakamura* contemplates applications/configurations where inductive powering of (or communication with) a mobile device by a base unit occurs in public and/or commercial settings (*e.g.*, apparatus 1 embedded in a table/seat holder on a **train**, "a table in a **facility at a destination** (a **shop** or a **conference room**)," a surface/shelf inside a public **locker**, or "a **ticket dispenser**…**in the station**"). (Ex. 1005, ¶¶0108, 0110, 0113-0114, 0117, 150-151, FIGS. 13C-E, 15A-B, 17; Ex. 1002, ¶¶158-159.) A POSITA would have appreciated/understood that in such applications, identification/detection/authentication/verification/confirmation of mobile device 2/3 (and its receiver) would have been desirable (*e.g.*, especially from the perspective of those who provide wireless charging and/or other services available to the public (*e.g.*, through apparatus 1 embedded in host surfaces (*e.g.*, desks/tables, shelves/lockers, ticket dispensers, etc.))). (Ex. 1002, ¶160.) A POSITA would have

appreciated the benefits/advantages of the above-discussed implementation/modification, such as *e.g.*, for verifying/tracking power system use, deterring improper/misuse of power source equipment, improving security, virus protection, data integrity, and confirming authorized/verified devices is properly positioned so that a high degree of magnetic coupling can be established for power transfer, like that disclosed/suggested by *Nakamura* and *Calhoon*. (*Id.*, ¶160; *e.g.*, Ex. 1006, ¶0050; Ex. 1005, ¶¶0066, 0074-89, 0099.)

A POSITA would have also recognized that *Nakamura-Odendaal*'s mobile device and *Calhoon*'s mobile device (*e.g.*, including an inductive power receiver) have similar components and functionalities, which would have further motivated the above-modification. (Ex. 1002, ¶161; *e.g.*, Ex. 1005, ¶¶0074 (power receiving control IC 42), 0077-0078 (modulation circuit 45 to modulate information for wireless transmission to apparatus 1 for controlling power/charge operations); Ex. 1006, ¶¶0034 (modem 310, 318 adapted to modulate/demodulate signals for wirelessly receiving/transmitting data used to control powering/charging), 0042 (controller 316 for storing/transmitting/receiving information for power operations), 0047-0048, FIGS. 3, 5A, 6.) The above teachings/suggestions would have guided a POSITA to consider/implement the above-discussed modification with a reasonable expectation of success that the resulting modified device would operate as intended and consistent with *Nakamura-Odendaal*'s operations/features. (Ex. 1002, ¶162.)

A POSITA would have had the skills, knowledge, rationale, and capability to implement such a modification with a reasonable expectation of success given the above-teachings/suggestions in *Nakamura-Odendaal-Calhoon*, and the state-of-art knowledge—especially where implementing such a modification would have involved applying known technologies (*e.g.*, use of identifier information (*e.g.*, ID/serial number, (*Nakamura*, *Calhoon*)) to verify/identify/authenticate/confirm device(s) (receiver/battery, etc.) receiving power from inductive power source (*Nakamura*, *Calhoon*) according to known methods/techniques (*e.g.*, components/processes that use identifier/device information wirelessly transmitted/received to control power of a mobile device (*Nakamura*, *Calhoon*)) to yield a predictable inductive power transfer/charging system that wirelessly identifies the device (and its receiver) to a base unit to monitor/detect/facilitate and/or ensure proper use of the system by authorized/verified device. (Ex. 1002, ¶¶162-163; §§IX.A.1(a)-(c).) *KSR Int'l Co.*, 550 at 416.

e) <u>1(e)/27(e)</u>: a means for avoiding overcharging one or both of the mobile device and battery inductively; and

(1) MPF Construction

Nakamura in view of *Odendaal* and *Calhoon* discloses/suggests this limitation under its plain meaning and **as MPF construed above**. (§VIII; Ex. 1002, ¶¶164-194.)[10]

Nakamura's mobile device includes regulator 47 that converts the DC voltage obtained via circuitry (*e.g.*, part of the "**receiver**" (§IX.A.1(c)) coupled to secondary coil 12 "to a predetermined voltage used for charging" that is "supplied to a charge control circuit 14" for "charg[ing] a battery."[11] (Ex. 1005, ¶¶0065, 0074-0075, FIGS. 3-5 (Full Charge Control 14); §IX.A.1(f); Ex. 1002, ¶165.) A POSITA would have

---

[10] During prosecution, the applicant did not dispute that "claimed elements" such as a "protection device" (like that disclosed by *Erickson* (Ex. 1031)) were known and support disclosure/obviousness of the claimed "means for avoiding overcharging." (Ex. 1004, 95-96, 110, 123-124; Ex. 1031, FIG. 5, ¶¶0007, 0045.)

[11] PO's infringement contentions allege the same "regulator" referenced for limitation 1(f)/27(f) meets the claimed "means for avoiding overcharging" in limitation 1(e)/27(e). (Ex. 1033, 56 (third form), 71.) Under PO's interpretation, and without conceding PO's contentions or that such mapping is appropriate, the "**regulator**" as mapped below for limitation 1(f)/27(f) also discloses limitation 1(e)/27(e) for similar reasons. (*Id.*; §IX.A.1(f).) Petitioner reserves the right to dispute such infringement contentions/positions in the Texas Litigation.

understood *Nakamura*'s "full charge control" features encompass/suggest a circuit/component that enables the battery to achieve full charge, while not charging beyond full charge (not overcharging). (Ex. 1002, ¶¶165-167.) *Nakamura* discloses during power transfer operations, mobile device 2/3 communicates "full charge" information, which is used by the primary circuit 10 in apparatus 1 to stop charging/powering the battery/device. (Ex. 1005, ¶0066 ("necessary to cease power transmission" when device 2 is "fully charged"), 0077-0078, 0079-0087 (providing power when device 2/3 is determined to be correctly placed), 0088 (TR11-13 are turned off to "cease power output" upon determining device 2 is fully charged based on the "information on full charge" communicated from "**device**" 2/3 to "**universal base unit**" 1), 0090-0091, 0096-0097, FIG. 4 (annotated below (*e.g.*, S18-S19)); Ex. 1002, ¶166.)

FIG. 4

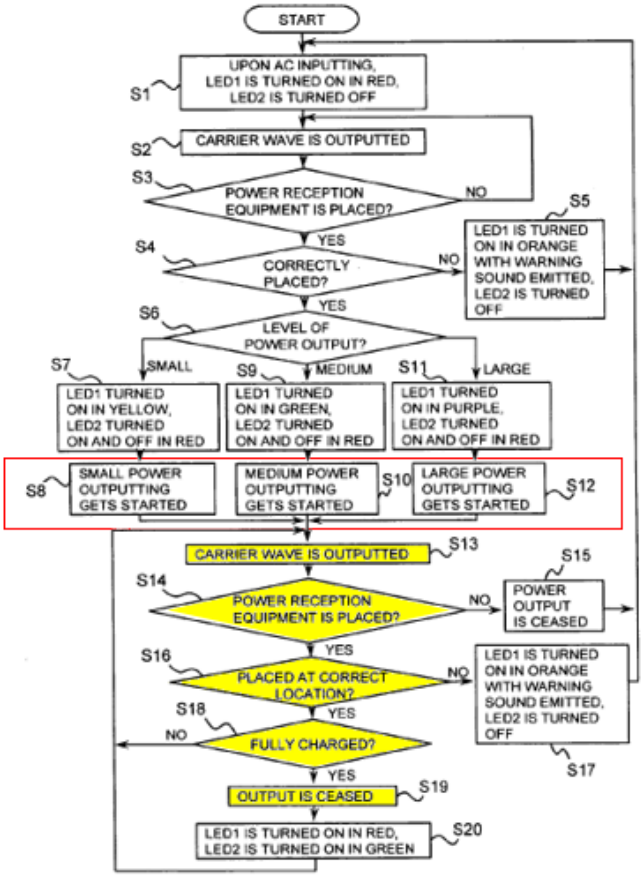

Nakamura also discloses other ways to detect when the battery is fully charged to stop power transfer (and thus prevent overcharging). (Ex. 1005, ¶¶0096, 0100-0101.) For example, full-charge determination circuit 35 may determine "whether…the portable telephone 2 has been fully charged based on the change in the current flowing in the primary side coil 11 detected by the current voltage detection circuit 38" and "[i]f a fully charged condition is determined…transistors [TR11-13] are all turned off to enable power transmission to be ceased." (*Id.*, ¶0100, ¶0101.) (Ex. 1002, ¶167.)

Although *Nakamura* includes features to avoid overcharging the mobile device/battery, such features involve apparatus 1 components that rely on information transmitted by device 2/3 during power operations. (*Supra*.) *Nakamura* does not expressly disclose that *mobile device 2/3 includes a* "**means for avoiding overcharging**" as claimed (under its plain meaning and as interpreted in §VIII). Nonetheless, it would have been obvious to a POSITA to implement such features in view of *Calhoon* and a POSITA's state-of-art knowledge at the time. (Ex. 1002, ¶168.)

A POSITA would have been aware that continuing to charge a fully charged battery may cause the battery to heat up, which can damage or detrimentally affect the battery and/or related components (*e.g.*, mobile device components). (Ex. 1002, ¶169; Ex. 1019, 8:67-9:7 (temperature rise of a battery during recharging can dramatically reduce reliability and service life of the battery), 9:11-18, 9:38-53 (preventing overcharging "***even if the 'stop' command was not received*** by the transmitter 12 due to electromagnetic interference"), 6:15-20, 7:60-67, 8:56-9:18, 14:1-6; Ex. 1031, FIG. 5, ¶¶0007, 0045; Ex. 1042, 1:59-67.) Thus, a POSITA would have known that it was advantageous to address overcharging issues with respect to portable devices/batteries and configure a system/device to have multiple ways to stop charging a battery when it is full (*e.g.*, in case one does not work properly like that demonstrated by Ex. 1019). (Ex. 1002, ¶169.) Accordingly, even though

Nakamura describes the above-discussed configurations/features that address battery overcharging, a POSITA would have been motivated to consider/implement other ways/mechanisms to supplement/complement such features (including those encompassed within device 2/3) in order to prevent/avoid overcharging in case *Nakamura*'s existing full-charge functionalities reliant on apparatus 1 do not/cannot function properly (*e.g.*, because of current detection/measurement issues, disruption in carrier wave and/or information signal (modulated wave) transmission/reception/generation/processing)). (Ex. 1002, ¶¶170-171.) *Calhoon* discloses/suggests such features. (§IX.A.1(d).)

In addition to that above (§IX.A.1(d)), *Calhoon* teaches mechanisms in the mobile device (inductive power receiver with battery pack) for avoiding battery overcharging. (Ex. 1002, ¶172.) *Calhoon* discloses:

> In an alternative arrangement [relating to FIG. 3], a thermistor or "T" line [not shown in FIG. 3] between the charger 322 of battery charger assembly 304 and the battery pack 350 can be used as a ***safety control to disrupt charging in the event the battery pack 350 experiences an overcharge*** or over-temperature condition.

(Ex. 1006, ¶0038, FIG. 3.) Also, that:

> when the battery charger assembly 304 begins to receive its requested voltage and power, the ***controller 316 may turn on the battery charger 322 in order to charge the battery pack 350***. In process block 520, ***if the battery is charged to the desired level,***

> ***the battery charger 322 can be switched off-line.***…In process block 522, if the battery 314 is not at the desired level of charge, then the charging process is continued.

(*Id*., ¶0048.) (*Id.*, ¶0044 ("controller 316…may be configured to read…other functions, alarms, and signals from the battery pack 350" such as "**battery pack voltage, relative state of charge, absolute state of charge, remaining capacity, full charge capacity, alarm warning, average time to full**…"), FIG. 5A.) (Ex. 1002, ¶172.) A POSITA would have thus understood that controller 316 and/or battery charger 322 in *Calhoon*'s power receiver/wireless device controls/regulates battery charging such that charging is disrupted/stopped when the battery is charged to a desired level (*e.g.*, full) or experiences an overcharge (*e.g.*, because it is full), thus preventing overcharging (or further overcharging). (Ex. 1002, ¶172.)

Calhoon thus discloses/suggests a mechanism that encompasses the corresponding structures or equivalents thereof (and claimed function) for the claimed "**means for avoiding overcharging**…" term. (§VIII.) For instance, the controller 316 and/or battery charger 322 (including its stored program(s) or in ASIC-based form) discloses or is equivalent to a "*battery regulator chip and/or a circuit that measures parameters of a battery (e.g., voltage, degree of charging, temperature, etc.) and uses an internal program to regulate the power drawn from a circuit to ensure overcharging does not occur*." (*Id.*; Ex. 1002, ¶173; Ex. 1006,

¶¶0038 (measures temperature), 0040, FIG. 4, 0043 ("controller 316 may have computer-readable media 415, which provides nonvolatile storage of computer-readable instructions, data structures, program modules and other data relevant for charging operations"), 0044 (voltage/charge state), 0048, 0066 ("the aspects may be implement via…(ASICs)"); Ex. 1002, ¶¶174-175.)

In light of *Calhoon*'s above-discussed teachings/suggestions in context of *Nakamura*'s disclosures and POSITA's state-of-art knowledge, a POSITA would have been motivated to further modify mobile device 2/3 in the above-discussed *Nakamura-Odendaal-Calhoon* combination (§§IX.A.1(a)-(d)) to include a battery regulator chip and/or a circuit that measures battery parameters (*e.g.*, voltage, degree of charging, temperature, etc.) and uses an internal program to regulate the power drawn from a circuit to prevent overcharging. (Ex. 1002, ¶176.)[12]

A POSITA would have been motivated, and found obvious, to implement such a modification to enhance/supplement/complement/improve *Nakamura*'s full-charge features in order to ensure battery overcharging does not occur even where the components/processes involved with such features fail to stop power from being transferred to device 2/3 and/or its battery (*e.g.*, due to disruptions,

[12] A POSITA had reasons to consider *Calhoon*'s teachings in context of *Nakamura-Odendaal* for the reasons discussed above. (§IX.A.1(d).)

circuit/component failures/issues, etc.), as known in the art. (Ex. 1002, ¶177; Ex. 1019, 9:11-18, 9:38-53.) For instance, such a modification would have been beneficial where, the signals are not/cannot be sent/received or appropriately converted/processed, which would prevent generation/transmission/processing of the "full charge" information/signals used by apparatus 1 to stop power/charge operations, as discussed above (*supra*; Ex. 1005, ¶¶0086-0088), or where there are component or other issues that preclude/hinder such full charge operations. (Ex. 1002, ¶177.) The same is true in applications based on *Nakamura*'s FIG. 6 configuration. (*Id.*, Ex. 1005, ¶¶0092-0094.)

A POSITA would have understood that *Nakamura-Odendaal*'s system and *Calhoon*'s system have similar approaches/processes regarding wireless/inductive charging and stopping charge operations when a battery/device is fully charged (*see supra*) and have similar/compatible components for providing such features (*e.g.*, *Calhoon*'s controller 316 and *Nakamura*'s power receiving control IC 42 (which contains regulator 47), full charge control circuit 14). (§IX.A.1(d); Ex. 1002, ¶178; Ex. 1005, ¶0065; Ex. 1006, ¶¶0038, 0048, FIG. 3.) Thus, a POSITA would have been guided/motivated to consider/implement configurations to include an "**means for avoiding overcharging**" in mobile device 2/3, similar to that claimed with a reasonable expectation of success that the resulting modified device would operate as intended and consistent with *Nakamura*'s operations/features. (Ex. 1002, ¶178.)

A POSITA would have had the skills, knowledge, rationale, and capability to implement such a modification with a reasonable expectation of success given the above-teachings/suggestions in *Nakamura-Odendaal-Calhoon*, and the state-of-art knowledge—especially where implementing such a modification would have involved applying known technologies (*e.g.*, overcharge protection mechanisms (*Calhoon*, *Nakamura*, Ex. 1019, 8:56-9:53, Ex. 1031, ¶¶0007, 0045)) to provide enhanced prevention of device battery overcharging (*id.*) according to known methods (*e.g.*, measuring/processing parameters, values, signals, information and/or program instructions to determine full charge status and preventing further charging (*Nakamura*, *Calhoon*)) to yield a predictable inductive power transfer/charging system that mitigates against damage caused by overcharging. (Ex. 1002, ¶¶179-180.) *KSR Int'l Co.*, 550 at 416.

(2) PO's Four Forms (Texas Litigation)

Nakamura alone and/or in combination with *Odendaal* and *Calhoon* discloses/suggests limitation 1(e)/27(e) under **PO's Texas Litigation Four Forms of interpretation for the claimed "means for avoiding overcharging**…." (§VIII; Ex. 1033, 56; Ex. 1002, ¶181.)

(a) First and Second Forms

Nakamura's above-discussed components and related processes that use codes/information signals generated/transmitted by device 2/3 and used by apparatus

1 to stop/adjust/control power transfer to device 2/3 meet PO's ***First and Second Forms***. (Ex. 1002, ¶¶182-186; §§IX.A.1(a)-(e)(1).)

Nakamura's mobile device uses modulation circuit 45 (part of power receiving control IC 42) and other relevant components/circuitry to transmit "information on full charge" that indicates "a state of full charge" to apparatus 1. (Ex. 1005, FIGS. 3-5, ¶¶0070, 0078-0078, 0086-0088, 0090-0091; *supra* §§IX.A.1(a)-(e)(1).) Full-charge determination circuit 35 in apparatus 1 uses that information to determine whether device 2/3 (or its battery) is fully charged, and if so, power-over circuit 32 turns off transistors TR11-13 to cease power output (step S19). (*Id.*) Thus, *Nakamura*'s mobile device (*e.g.*, cellphone, laptop) contains integrated chip component and/or a circuit (*e.g.*, power receiving IC 42, secondary side circuit 13), which contains modulation circuit 45 and other components/circuitry that sends the full-charge information that functions equivalent to an end of power message since it signals apparatus 1 to cease power transfer to device 2/3, thereby avoiding/preventing overcharging. (Ex. 1002, ¶¶183-184.) Such features disclose or are equivalent to PO's alleged ***First Form*** that "satisf[ies] this claim element." (Ex. 1033, 56 (First Form: "send an 'end power transfer' message to the wireless charger base station unit, signaling to the base unit to stop inductive charging and preventing overcharging following the WPC Standard Protocol").)

Nakamura similarly discloses and/or suggests the ***Second Form***. (Ex. 1002, ¶185.) As explained, the same operations include generating/sending by the mobile device 2/3 "information on consumed power" (power requirements) of the mobile device/receiver/battery to apparatus 1, which is used by power amount determination circuit 34 to determine whether power of device 2/3 is large/medium/small, and (like determination circuit 33) works with power change-over circuit 32 in a closed loop fashion to adjust power/voltage/current transmitted (inductively) to device 2/3. (§§IX.A.1(a)-(e)(1); Ex. 1005, Abstract, FIGS. 3-5, ¶¶0017-0019, 0078, 0083-0085, 0090-0091, 0099; Ex. 1002, ¶186.) Such features disclose or are equivalent to PO's alleged ***Second Form*** that "satisf[ies] this claim element" as "a further form of overcharge protection." (*Id.*; Ex. 1033, 56 (Second Form: "communicate voltage/current/power requirements to the charger for regulation by the charger, which the charger then uses for closed-loop control of the voltage/current/power delivered to the product").)

(b) Third and Fourth Forms

As to the ***Third Form***, PO points to a **regulator** as an example of the claimed "means for avoiding overcharging…" "[b]ecause the regulator limits the voltage, current, or power delivered, thereby reducing the charge delivered, and is configured to provide this regulated, limited power to the battery and can also be shut down if needed." (Ex. 1033, 56.) As explained above and below for limitation 1(f)/27(f),

Nakamura discloses regulator 47 in device 2/3 that converts the DC voltage obtained via circuitry (*e.g.*, part of the "**receiver**" (§IX.A.1(c)) coupled to secondary coil 12 "to a predetermined voltage used for charging" that is "supplied to a charge control circuit 14" for "charg[ing] a battery."[13] (Ex. 1005, ¶¶0065, 0074-0075, FIGS. 3-5; §IX.A.1(f); Ex. 1002, ¶¶187-188.) A POSITA would have understood that in accordance with *Nakamura*'s above-discussed power control features (*supra*; §§IX.A.1(a)-(e)(1); Ex. 1005, ¶¶0086-0088 (full charge), ¶¶0079-0082 (positional deviation)), regulator 47 "can also be shut down if needed" since if no power is being transferred (upon full charge or excessive positional deviation), regulator 47 would not be regulating such power and thus is effectively shut down. (Ex. 1002, ¶188.) Thus, *Nakamura* discloses structure/feature that meets or is equivalent to PO's ***Third Form*** and the claimed function.

The above-discussed *Nakamura-Odendaal-Calhoon* combination also discloses and/or suggests limitation 1(e)/27(e) under PO's ***Third and Fourth Forms***. (§IX.A.1(e).) That section explains how/why it would have been obvious to modify the *Nakamura-Odendaal-Calhoon* system/device to include a mechanism that avoids overcharging the mobile device and/or battery inductively (*e.g.*, mechanism similar to controller 316 and/or battery charger 322 in *Calhoon*'s inductive power

[13] *See supra* n.11.

receiver that act as a "regulator" to control/regulate charging of a battery such that when the battery is charged to a desired level (*e.g.*, full or near full), charging is stopped to prevent overcharging). Such a mechanism/feature in the modified *Nakamura-Odendaal-Calhoon* system/device would likewise operate like a "regulator" to "limit[] the voltage, current, or power delivered, thereby reducing the charge delivered" and would have been "configured to provide this regulated, limited power to the battery" and "can also be shut down if needed" as identified in PO's ***Third Form***. (Ex. 1002, ¶189.)

Accordingly, without conceding any of PO's forms are proper interpretations of the claimed "means for avoiding overcharging…," *Nakamura* alone and/or the *Nakamura-Odendaal-Calhoon* system/device discloses and/or suggests structure/feature that meets or is equivalent to PO's ***Third Form*** and the claimed function. (*Supra*; §IX.A.1(e)(1); Ex. 1002, ¶190.)

The *Nakamura-Odendaal-Calhoon* system/device discloses and/or suggests structure/feature that meets or is equivalent to PO's ***Fourth Form*** for reasons similar to those discussed above for the ***Third Form***. (Ex. 1002, ¶191; §§IX.A.1(e)(1); *supra*.) As explained, *Nakamura*'s mobile device includes power receiving side control IC 42 and full charge control circuit 14. IC 42 (which is "in the shape of an IC chip") performs power receiving control of circuit 13, and prevents circuits from voltage breakdown, and regulator 47 converts obtained DC voltage to supply it to

charge control circuit 14 for charging device 2/3's battery. (Ex. 1005, ¶¶0065, 0074-0075, FIGS. 3, 5; Ex. 1002, ¶192.)

A POSITA would have understood that power receiving side control IC 42 (or IC 42 and full charge control circuit 14) disclose and/or suggest (or are equivalent to) a "**Battery Charger or Power Management (PMIC) ICs that charge the battery**…" (Ex. 1033, 56 (Fourth Form)). (Ex. 1002, ¶193.) Power control IC 42 (also referred to as "**power adjusting** section") includes components such as voltage clamp circuit 46 and regulator 47 that manage power/voltage that is received (inductively) from apparatus 1, and/or manage/control/regulate power/voltage used to charge a battery. (Ex. 1002, ¶193.) The above-discussed *Nakamura-Odendaal-Calhoon* system/device would have included such features, along with a mechanism (including integrated circuitry) that would have prevented/avoided the device's battery from overcharging (*see* §IX.A.1(e)(1)). Accordingly, without conceding any of PO's forms are proper interpretations of the claimed "means for avoiding overcharging…," the *Nakamura-Odendaal-Calhoon* system/device discloses and/or suggests structure/feature that meets or is equivalent to PO's ***Fourth Form*** and the claimed function. (*Supra*; §IX.A.1(e)(1); Ex. 1002, ¶¶193-194.)

f) <u>1(f)/27(f)</u>: a regulator, coupled to the output of the receiver or to the battery, that regulates an output voltage or output current provided by the receiver, to the [mobile] device or battery, to be within a range of parameters for the [mobile] device or the battery;

Nakamura (as modified above) discloses/suggests this limitation. (Ex. 1002, ¶¶195-208; §§IX.A.1(a)-(e).) For example, regulator 47 alone, or collectively with charge control circuit 14 (in device 2/3), is an example of a "**regulator**" that is "**coupled to the output of the receiver or to the battery, that regulates an output voltage or output current provided by the receiver, to the [mobile] device or battery**" as claimed.[14] (Ex. 1002, ¶¶196-197.) As explained, *Nakamura*'s mobile device 2/3 includes a power receiving side control IC (power adjusting section) 42 with a regulator 47 "that performs power receiving control of the secondary side circuit 13." (Ex. 1005, ¶0074, FIGS. 3, 5.) "[T]he regulator 47 converts the DC voltage obtained by the conversion [*e.g.*, of a carrier wave] to a predetermined voltage used for charging and supplies the predetermined voltage to the charge control circuit 14" (*id.*, ¶0075), and "the charge control circuit 14 charges a battery with the supplied DC voltage" (*id.*, ¶0065). (Ex. 1002, ¶¶196-197.) The DC voltage is provided by circuitry that is part of the "receiver" examples identified above for limitation 1(c)/27(c). Thus, output voltage/current provided by such a "receiver" is regulated via regulator 47 or regulator 47 and charge control circuit 14—each of which is an example of the claimed "**regulator**." (Ex. 1002, ¶197.)

[14] *See supra* n.11.

Regulator 47 is "**coupled to the output of the receiver**" discussed for limitation 1(c)/27(c). (§IX.A.1(c).) As shown below,[15] such a "**regulator**" (green) is coupled to each of the exemplary identified "**receiver**(s)": (1) secondary side circuit 13 (with or without regulator 47)[16] (*e.g.*, shown left-red below without including regulator 47), (2) circuit 13 (with or without regulator 47) collectively with charge control 14 (*e.g.*, shown middle-red below without including regulator 47), or (3) other circuitry/components in circuit 13 (*e.g.*, one or more of capacitor C4, rectifier 41, inductor L3, and/or capacitor C3 (*e.g.*, right-red below)). Similarly, regulator 47 is also "**coupled to…the battery**" (§IX.A.1(b)), which while not shown in *Nakamura*'s figures, is contained within the "**mobile device**" 2/3 and receives the regulated voltage/current for charging via charge control 14. (§§IX.A.1(a)-(c), IX.A.1(e); Ex. 1005, ¶¶0062-0063, 0065, 0074-0075, 0110, Claims 15, 29-30, 35.) (Ex. 1002, ¶¶198-199.)

[15] *See supra* n.9.

[16] *See supra* n.8.

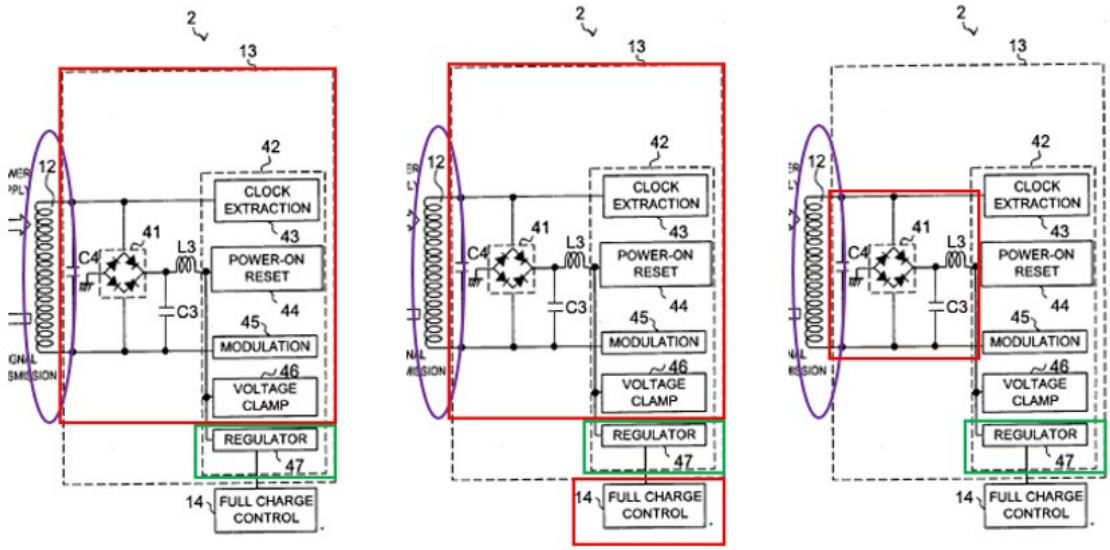

(*Id.*, FIG. 3 (annotated).)

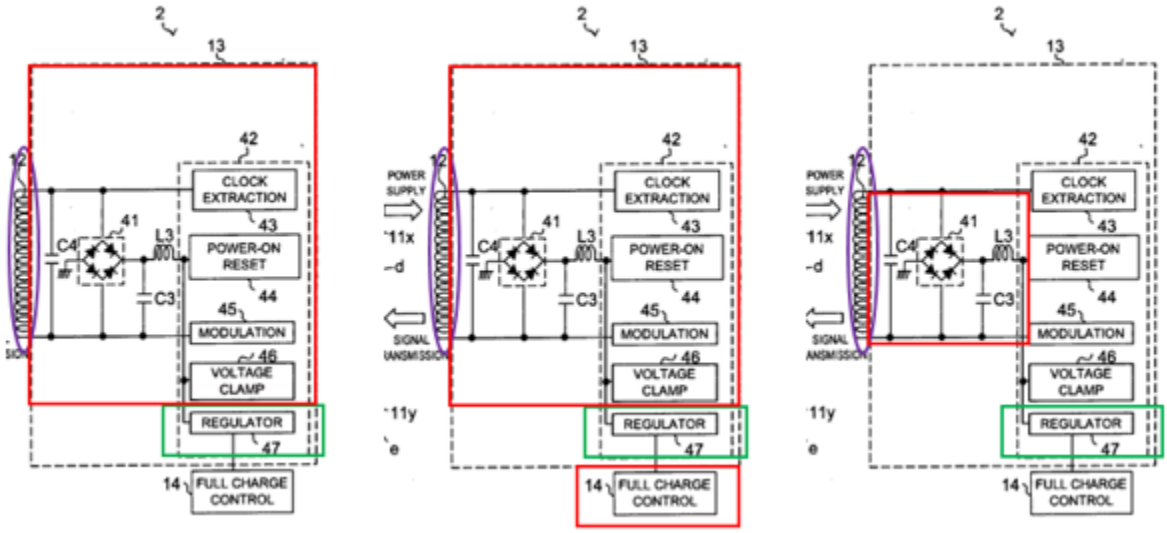

(*Id.*, FIG. 5 (annotated).)

Similarly, *Nakamura*'s regulator 47 collectively with charge control circuit 14 also discloses the claimed "**regulator**" (green below) coupled to the "**battery**" or the "**receiver**" (with or without regulator 47, *e.g.*, shown red below without including regulator 47). (Ex. 1002, ¶200.)

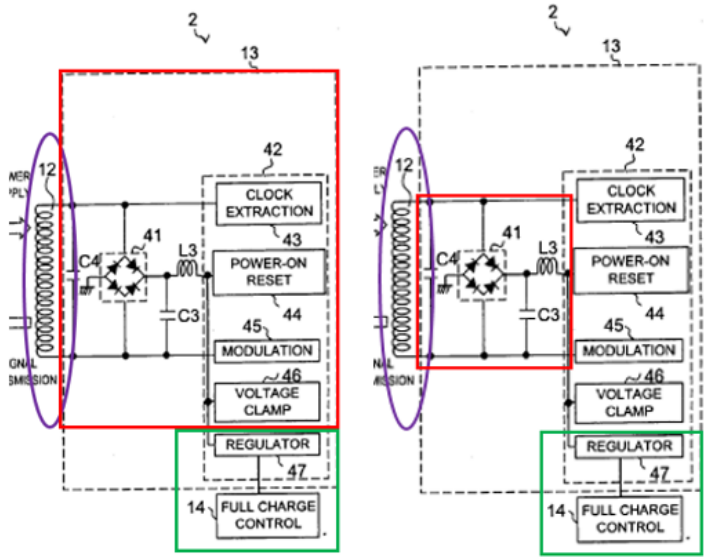

(Ex. 1005, FIG. 3 (annotated).)

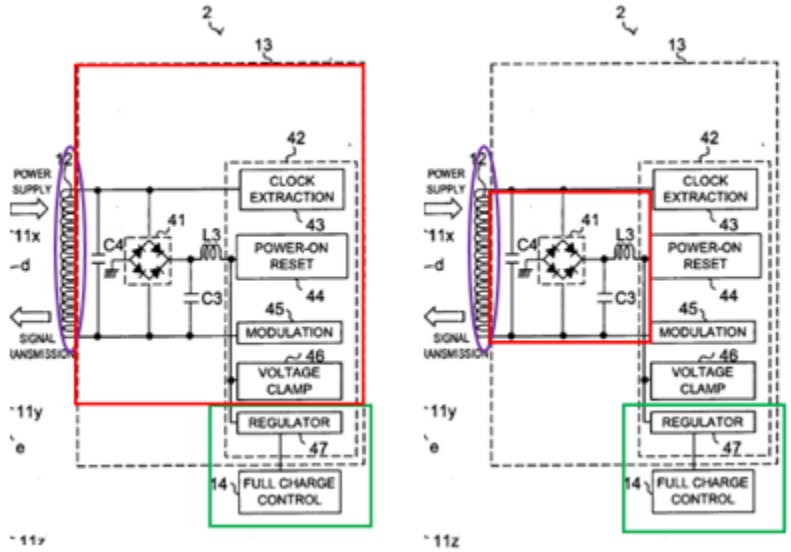

(*Id.*, FIG. 5 (annotated).)

Further, the above-identified "**regulator**" regulates the output voltage/current provided by the above-identified "**receiver**" "**to be within a range of parameters for the [mobile] device or the battery**" as claimed. (Ex. 1002, ¶200.) As explained, *Nakamura* discloses "regulator 47 convert[ing] the DC voltage obtained

by the [carrier wave] conversion to a ***predetermined voltage*** used for charging" a battery. (*Supra*; Ex. 1005, ¶¶0065, 0074-0075, FIGS. 3-5; Ex. 1002, ¶201.) A POSITA would have understood that "a predetermined voltage" is an acceptable voltage for the battery given *Nakamura* describes providing appropriate power/voltage to device 2/3 for charging the battery based on power requirements (*id.*; §§IX.A.1(a)-(e); Ex. 1005, Abstract, ¶¶0017-0019, 0063, 0066, 0085-0088, 0091, Ex. 1002, ¶201), and thus that such predetermined voltage is necessarily within a range of parameters for the device/battery since *Nakamura*'s system would not operate as intended if the regulated power (voltage and/or current) from the "receiver" was outside of proper operational range.[17] (Ex. 1002, ¶201.)

Moreover, to the extent that *Nakamura* (as modified above) does not disclose this claimed feature, a POSITA would have been motivated, and found obvious, to configure the *Nakamura-Odendaal-Calhoon* system to include such features in view of *Nakamura* and *Calhoon* and state-of-art knowledge. (Ex. 1002, ¶202.)

As explained, *Nakamura* discloses adjusting the power/voltage/current level (*e.g.*, small/medium/large) used to power/charge a particular device 2/3 and/or its

[17] The '440 patent does not provide any disclosure/details of a regulator that regulates output voltage/current "to be within a range of parameters for the [mobile] device or the battery" as claimed. (*See generally* Ex. 1001.)

battery based on power requirements of the device/battery. (*Supra*; §§IX.A.1(a)-(c), (e); Ex. 1002, ¶203.) A POSITA would have understood/appreciated that circuits/systems/components in power transfer/control/regulation, etc. applications experience fluctuations in signal levels/values during operations, and thus that components/circuits, etc. were typically designed/manufactured/implemented with tolerances that permitted operations within a range of values/parameters. (Ex. 1002, ¶203.) A POSITA would have applied/implemented the same common design concepts (or used components conforming to such concepts) in the circuits/components/configurations in *Nakamura*'s system/device (including as modified above). (*Id.*)

Thus, a POSITA would have configured the above-modified *Nakamura* system/device so the "**regulator**" regulates the power/voltage/current provided to the battery of device 2/3 according to the adjusted power level transmitted by apparatus 1 to be within a range of acceptable/appropriate values/parameters for the device/battery ("**regulates**" "**receiver**" output voltage/current to be "**within a range of parameters for the [mobile] device or the battery**"), to promote proper and flexible operations and resulting benefits/advantages (*e.g.*, not limiting such voltage/current to a narrow/single value, thus allowing for normal (known/predictable) fluctuations in the voltage/current regulated to the battery, and thus not limiting the functionality of the charging system). (*Id.*, ¶204.) Such

knowledge/motivation, coupled with the teachings/suggestions of *Calhoon*, would have motivated a POSITA to implement such a modification/configuration in the above-discussed *Nakamura-Odendaal-Calhoon* system. (*Supra*; Ex. 1002, ¶205.)

Calhoon discloses the mobile device/receiver includes battery charger assembly 304 that is "enabled to determine the power requirements or other data of a battery pack 350" based on "[r]equirements data…obtained from the smart controller 352 of battery pack 350," such as "values for the charging current and the charging voltage." (Ex. 1006, ¶0044, FIG. 5A.) "The requirements data…may be stored in the computer readable storage 415 of controller 316 for use during charging operations or for later transmission to the inductive power source 302." (*Id.*) "[V]alues can be obtained from the battery pack 350 for battery pack voltage, relative state of charge, absolute state of charge, remaining capacity, full charge capacity, alarm warning, average time to full, battery chemistry." (*Id.*) "[C]ontroller 316…may determine or otherwise access the ***battery pack 350 charging requirements and charge parameters*** as discussed with respect to block 500 shown in FIG. 5A" (*id.*, ¶0049), and can be informed "as to a wide range of information about [the battery], e.g., current, voltage, power requirements, and rated capacity" (*id.*, ¶0037). (Ex. 1002, ¶206.)

Such teachings/suggestions (with *Nakamura*'s dislcosures and state-of-art knowledge) would have guided a POSITA to consider/configure/implement the

above-discussed modification with a reasonable expectation of success that the resulting modified device would operate as intended, consistent with *Nakamura*'s operations/features. (Ex. 1002, ¶207.)

A POSITA would have had the skills, knowledge, rationale, and capability to implement such a modification, especially where it would have involved applying known technologies (*e.g.*, regulator circuitry) according to known/conventional methods/techniques/concepts (*e.g.*, regulating voltage/current within an acceptable range of values/parameters) to yield a predictable inductive charging system that provides appropriate/regulated power/voltage/current to the mobile device/battery. *KSR Int'l Co.*, 550 at 416. (Ex. 1002, ¶208; §§IX.A.1(a)-(e).)

g) <u>1(g)/27(g)</u>: wherein different [mobile] devices and batteries can have different charging characteristics associated therewith; and

Nakamura in view of *Odendaal* and *Calhoon* discloses/suggests this limitation for the reasons discussed above for limitations 1/27(a)-(c), (e)-(f). (Ex. 1002, ¶¶209-210; §§IX.A.1(a)-(f).) As explained, *Nakamura*'s configurations adjust the level of charging power to accommodate different mobile devices (*e.g.*, cellphones, laptops) with different batteries having different power requirements ("**charging characteristics**") (*id.*; Ex. 1005, FIGS. 3-5, ¶¶0016-0019, 0021, 0063, 0099; Ex. 1002, ¶210), and *Calhoon* confirms a POSITA's understanding that different devices/batteries have different charging characteristics (Ex. 1006, ¶¶0033,

0037, 0040 ("different battery packs can have different charging requirements"), 0045 ("…different power requirements"), 0049; Ex. 1002, ¶210; §IX.A.1(f)).

h) <u>1(h)/27(h)</u>: wherein the receiver communicates with the base unit to

Nakamura in view of *Odendaal* and *Calhoon* discloses/suggests this limitation for the reasons above and below. (Ex. 1002, ¶¶211-214; §§IX.A.1(a)-(g).)

As explained, the above-identified "**receiver**" (§§IX.A.1(c), IX.A.1(f)) in device 2/3 communicates information with apparatus 1 ("**base unit**"). (§§IX.A.1(a)-(e); Ex. 1005, FIGS. 3-5, Abstract, ¶¶0066, 0070, 0075 ("IC 42 includes components for performing "signal processing for a signal transmitted through the primary side coil 11 and secondary side coil 12"), 0076-0077 (oscillation circuit 37 outputs a carrier wave subsequently "transmitted to the secondary side coil 12…magnetically coupled with the primary side coil 11"); Ex. 1002, ¶212.) The carrier wave signal transmitted from primary coil(s) 11 in apparatus 1 is received by the "**receiver coil**" 12 and above-identified "**receiver**" (§IX.A.1(c)) so that information regarding device 2/3 (*e.g.*, "power reception equipment" code, "consumed power" information, "full charge" information) is modulated and transmitted back to apparatus 1.[18] (Ex. 1005, ¶¶0077-0078 ("…The modulated wave supplied to the

[18] *See* §IX.A.1(d) regarding communication of ID/serial number, etc. in *Nakamura-Odendaal-Calhoon*.

secondary side coil 12 from the modulation circuit 45 is transmitted to the primary side coil 11…The demodulation circuit 36…receives and demodulates the transmitted modulated wave…”)), which is used to control powering/charging operations (*id.*; *id.*, ¶¶0078-0090, 0091 (“transmit power in the same manner” as with FIG. 3, where “the level of power to be transmitted [is] ***determined from the signal containing the ‘information on consumed power’ received from the portable telephone 2***”)). (Ex. 1002, ¶¶213-214; §§IX.A.1(a)-(f); §§IX.A.1(i)-(k).)

i) <u>1(i)/27(i)</u>: detect, identify and authenticate the receiver with the base unit, as provided by the identification component,

Nakamura in view of *Odendaal* and *Calhoon* discloses/suggests this limitation. (Ex. 1002, ¶¶215-222; §§IX.A.1(a)-(h).) For the reasons above and below, the “**receiver**” in the *Nakamura-Odendaal-Calhoon* system/device would have been configured to communicate with apparatus 1 to “**detect, identify and authenticate the receiver with the base unit**” (apparatus 1), “**as provided by the identification component**” as discussed in limitations 1(c)-(d)/27(c)-(d). (§§IX.A.1(c)-(d); Ex. 1002, ¶216.)

As explained, the *Nakamura-Odendaal-Calhoon* system/device would have included an “**identification component**” configured to provide “**receiver**” detection/identification/authentication information (*e.g.*, “power reception equipment” code, ID/serial number, security certificate, digital signature, etc.) to

apparatus 1 ("**base unit**") so that apparatus 1 can "**detect, verify, and authenticate the receiver**" in device 2/3. (§IX.A.1(d); Ex. 1002, ¶216.) As discussed, such a modification would have allowed apparatus 1 to detect, identify, verify, authenticate, and ensure an identified/authorized/verified/authenticated and properly detected/positioned/aligned mobile device/receiver is provided appropriate power consistent with *Nakamura-Calhoon*. (§IX.A.1(d); Ex. 1005, ¶¶0077-0078, FIGS. 3-5; Ex. 1006, Abstract ("authentication of devices that are allowed by the source to be powered or otherwise charged"), ¶¶0022, 0034, 0042, 0046-0048, 0050-0052, FIGS. 3, 5A, 6; Ex. 1002, ¶217.)

Also, as discussed in §IX.A.1(d), such implemented features in the *Nakamura-Odendaal-Calhoon* system/device would have beneficially enhanced/expanded the way the system provides power/charge to mobile devices/batteries—*e.g.*, deterring improper/misuse of the equipment, improving security, virus protection, data integrity, etc. (*Id.*; Ex. 1002, ¶¶218-220; *supra* §§IX.A.1(d), IX.A.1(h); Ex. 1006, Abstract, ¶¶0022, 0034, 0046-0048, 0050-0052; Ex. 1005, ¶0066, 0074-89, 0099; *infra* §§IX.A.1(j)-(l).)

A POSITA would have had similar motivation, rationale, skills, and expectation of success in configuring/implementing the *Nakamura-Odendaal-Calhoon* system/device with such features (as recited in limitation 1(i)/27(i)) as those explained above (*supra* §§IX.A.1(d)-(h)). (Ex. 1002, ¶219.) Such a POSITA

would have been further motivated in light of *Calhoon*'s teachings/suggestions noted above—*e.g.*, transmitting identifying/authenticating information such as security certificate, digital signature, and/or information provided by a manufacturer (*e.g.*, manufacturer's code (Ex. 1001, 7:46-49 ("…mobile device, its authenticity (for example its manufacturer code)…"))) that is used by the base unit to authenticate the receiver before power is transmitted. (Ex. 1006, ¶¶0042 ("controller 316 may contain…data programmed by the manufacturer…such as a battery charger ID number, serial number, manufacturer's name and date of manufacture" that "can be used by the inductive power source 302 for novel power operations…of the present invention…"), 0052 ("inductive charging source 302 may request for a security certificate or digital signature from the battery charger assembly 304 to authenticate it" and if authenticated, "source 302 supplies the requested voltage and power"); Ex. 1002, ¶219.)

As discussed, a POSITA would have appreciated/understood that the above-modification would ensure that *Nakamura-Odendaal-Calhoon*'s device 2/3 would work properly with apparatus 1 for charging the device's battery, which would mitigate/prevent issues, *e.g.*, damage cause by virus infections or overheating. (*Id.*; Ex. 1005, ¶¶0066, 0099; Ex. 1006, ¶¶0006-0007, 0022, 0050, 0065; §IX.A.1(d); Ex. 1002, ¶220.)

Accordingly, for the reasons above and for limitation 1(d)/27(d), a POSITA would have been motivated and found obvious to implement the above-modification to the *Nakamura-Odendaal-Calhoon* system/device (*e.g.*, to improve efficiency/safety/security of the system (*e.g.*, protect valuable assets with embedded base units such as a table/seat holder on a train, table in a shop/conference room, surface/shelf inside a public locker, or "ticket dispenser…in the station")). (*Supra*; §IX.A.1(d); Ex. 1002, ¶221-222.) *KSR Int'l Co.*, 550 at 416.

j) <u>1(j)/27(j)</u>: determine and then activate one or more primary coils of the base unit which are aligned with the receiver coil,

Nakamura in view of *Odendaal* and *Calhoon* discloses/suggests this limitation. (Ex. 1002, ¶¶223-229; §§IX.A.1(a)-(i).)

As explained above, *Nakamura* discloses that the information signals communicated from mobile device 2/3 to apparatus 1 includes code/information that is used to detect/verify presence and determine and activate one or more primary coils that is properly aligned with secondary coil 12. (§§IX.A.1(a)-(i); Ex. 1002, ¶224.) *Nakamura* discloses configurations where apparatus 1 uses switching circuits associated with one of a plurality primary coils 11x-11z (orange below) to power/charge the mobile device 2/3. (§§IX.A.1(a)-(b); Ex. 1005, FIG. 5 (annotated below), FIGS. 1A-4, ¶¶0062-0065, 0069-0076, 0077-0079, 0083-0091.)

FIG. 5

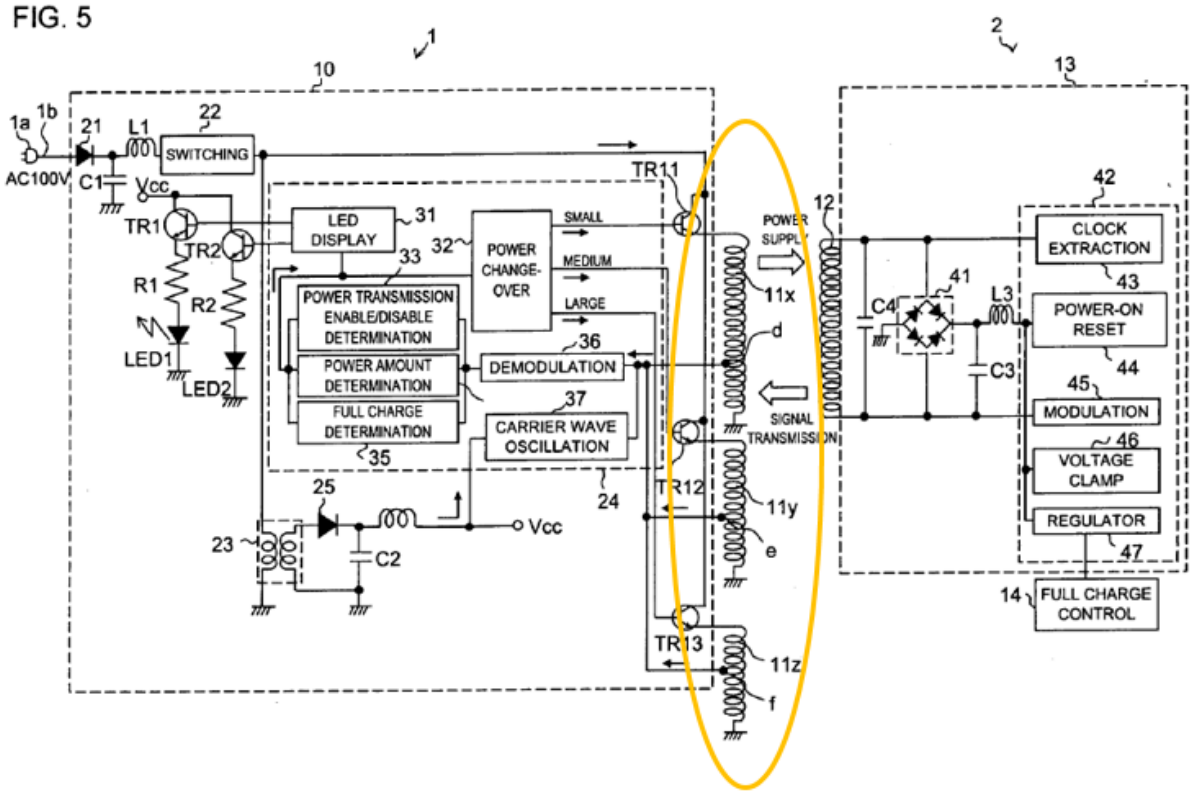

For example, determination circuit 34 (in apparatus 1) uses "information on consumed power" (included in the information/modulated signal transmitted from device 2/3) to determine whether a small/medium/large power level is to be provided by apparatus 1, and selectively switches one of the associated transistors TR11-13 to allow current to pass through the appropriate primary coil 11x-11z that generates a magnetic field to facilitate the transfer of such selected power via the magnetic coupling established between an activated primary coil 11x-11z and secondary coil 12. (§§IX.A.1(a)-1(i); Ex. 1002, ¶¶224-225; Ex. 1005, FIGS. 1-5, ¶¶0077-0078, 0083-0085, 0090-0091.)

Nakamura also discloses the information signal communicated from device 2/3 to apparatus 1 includes "code" information that is used to detect and verify presence and proper alignment of secondary coil 12 with primary coil(s) 11. Power to mobile device 2/3 is provided via the primary and secondary coils when it is determined mobile device 2/3 ("**[mobile] device**") and its secondary/receiver side coil 12 ("**receiver coil**") are present and properly positioned/aligned with apparatus 1 ("**base unit**") and its primary side coils ("**primary coils**") such that a high degree of magnetic coupling is established. (Ex. 1005, ¶¶0062-0063, 0065, 0078-0082, 0087-0088 0090-0091, 0096, 0109; §§IX.A.1(a)-(i); Ex. 1002, ¶226.)

For example, determination circuit 33 "determines whether or not power reception equipment is placed on the power transmission apparatus 1, based on the '**code indicating being power reception equipment**' (step S3)" received from device 2/3. (Ex. 1005, ¶0078; ¶0063 ("recognizing" device 2/3 "placed on…apparatus 1" so as to transmit appropriate power).) If the code is received, "it is determined that power reception equipment is placed on the power transmission apparatus 1 and it is *determined whether or not the power reception equipment is correctly placed on the power transmission apparatus 1* (step S4)." (*Id.*) If not, "the carrier wave is outputted again (Step S2)" (no power transmission). (*Id.*) (*Id.*, ¶¶0077, 0079 ("whether or not the power reception equipment is correctly placed means "*whether or not the coil of the power receiving side and the coil of the power*

transmission side are arranged at positions where a high power transmission efficiency…is obtained" or a "*high coupling degree in magnetic coupling is established*"), 0080-0081, 0082 ("[I]t is determined ***whether or not the positional deviation*** of the portable telephone 2 from the power transmission apparatus 1 ***exceeds a predetermined value (step S4). If it exceeds, no power transmission is performed***" because of low power transmission efficiency.), FIGS. 11A-11B, ¶¶0083, 0096, 0109, FIGS. 13A-13E.) (§§IX.A.1(a), IX.A.1(c), IX.A.1(h); Ex. 1002, ¶¶226-227.)

Such features would have been implemented in the *Nakamura-Odendaal-Calhoon* system/device discussed above. (§§IX.A.1(a)-(i).) Accordingly, for reasons above and below, the "receiver" in mobile device 2/3 of *Nakamura-Odendaal-Calhoon* system (whether associated with FIG. 3 or FIG. 5 arrangement) would likewise have been configured to communicate with apparatus 1 ("**base unit**") to "**determine and then activate *one or more* primary coils** (*e.g.*, coils 11x-11z) **of the base unit** (apparatus 1) **which are aligned with the receiver coil** (coil 12)" as claimed. (*Id.*; Ex. 1002, ¶¶227-229; *supra*; §§IX.A.1(a)-(i); Ex. 1005, FIGS. 3, 4 (annotated below) (S4 ("No"), S5, S1-S3), ¶¶0076-0082, 0086 (ceasing power transmission by turning off TR11/TR12/TR13 when device 2 has been removed), FIG. 5, 0090-0091; §§IX.A.1(k)-(l).)

FIG. 4

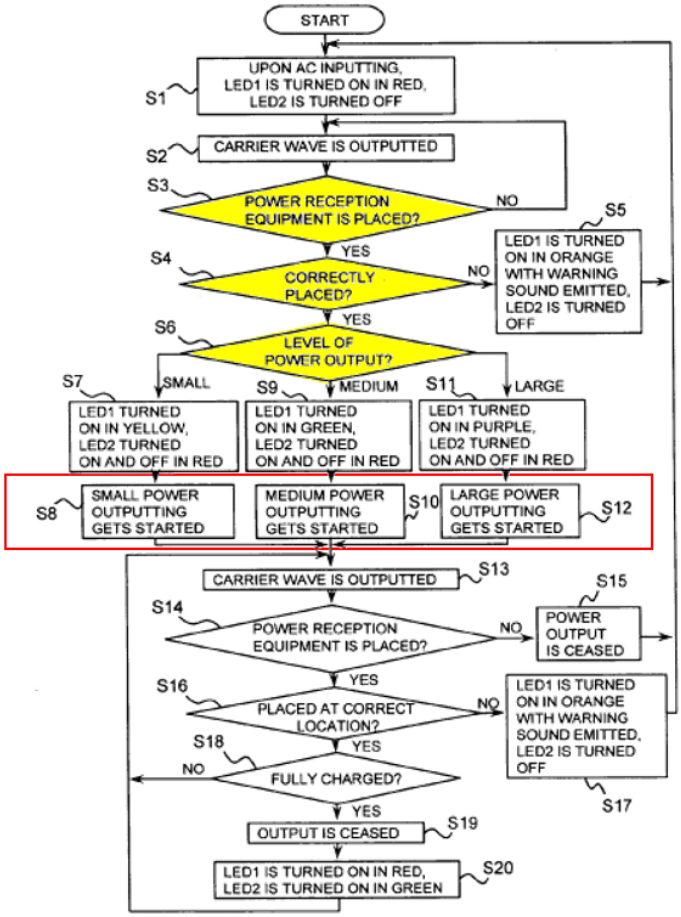

k) <u>1(k)/27(k)</u>: verify the continued presence of the receiver near the base unit, and

Nakamura in view of *Odendaal* and *Calhoon* discloses/suggests this limitation. (Ex. 1002, ¶¶230-233; §§IX.A.1(a)-(j).) As explained above, *Nakamura* discloses that the presence/alignment of mobile device 2/3 (and thus its "**receiver**" and coil) with apparatus 1 ("**base unit**") (and an activated primary coil) is continuously checked and verified during power/charge operations using the information/modulated signals communicated to apparatus 1. (*See, e.g.*, §§IX.A.1(c)-(e), IX.A.1(h)-(j); Ex. 1005, FIGS. 3-5, ¶¶0076-0083, 0086-0091,

0096, 0109; Ex. 1002, ¶231.) *Nakamura* explains "***[e]ven after the power transmission is started…it is checked whether or not [device 2/3]…has been removed*** from on…apparatus 1 according to ["*code indicating being power reception equipment*"] transmitted back against the carrier wave (step S14)." (Ex. 1005, ¶0086.) If the "code…" is not received, "it is determined that [device 2/3] has been removed from…apparatus 1" and power transmission stops. (*Id.*; *id.*, ¶¶0087-0088, ¶¶0078-0083, FIG. 4 (annotated below), 0087-0088 (verifying/checking continued presence/alignment); Ex. 1002, ¶231.) A POSITA would have understood that step S14 (*see* FIG. 4 (annotated below)), which (alone, or with step S16) relates to **verification of the presence/alignment** of device 2/3 (and its receiver) near apparatus 1, along with other steps (S13/S16/S18), forms a loop within the overall FIG. 4 process, and thus **continues continuously** (*e.g.*, until the device/receiver ceases to be present near apparatus 1, device/battery is fully charged, etc.), and thus the receiver in the modified *Nakamura* system/device would have communicated with apparatus 1 to likewise "**verify the continued presence of the receiver near the base unit**" as claimed. (Ex. 1002, ¶¶232-233.)

FIG. 4

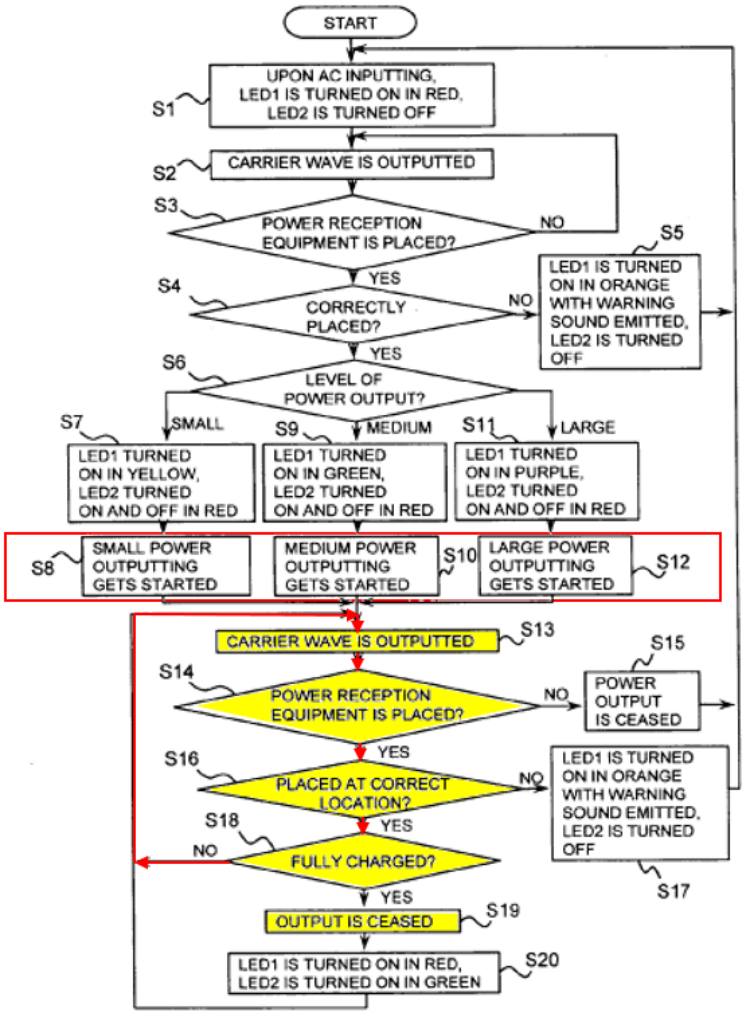
START
UPON AC INPUTTING, LED1 IS TURNED ON IN RED, LED2 IS TURNED OFF
S1
CARRIER WAVE IS OUTPUTTED
S2
S3
POWER RECEPTION EQUIPMENT IS PLACED?
NO
YES
S5
LED1 IS TURNED ON IN ORANGE WITH WARNING SOUND EMITTED, LED2 IS TURNED OFF
S4
CORRECTLY PLACED?
NO
YES
S6
LEVEL OF POWER OUTPUT?
S7
SMALL
S9
MEDIUM
S11
LARGE
LED1 TURNED ON IN YELLOW, LED2 TURNED ON AND OFF IN RED
LED1 TURNED ON IN GREEN, LED2 TURNED ON AND OFF IN RED
LED1 TURNED ON IN PURPLE, LED2 TURNED ON AND OFF IN RED
S8
SMALL POWER OUTPUTTING GETS STARTED
MEDIUM POWER OUTPUTTING GETS STARTED
S10
LARGE POWER OUTPUTTING GETS STARTED
S12
CARRIER WAVE IS OUTPUTTED
S13
S15
S14
POWER RECEPTION EQUIPMENT IS PLACED?
NO
POWER OUTPUT IS CEASED
YES
S16
PLACED AT CORRECT LOCATION?
NO
LED1 IS TURNED ON IN ORANGE WITH WARNING SOUND EMITTED, LED2 IS TURNED OFF
S17
S18
YES
NO
FULLY CHARGED?
YES
OUTPUT IS CEASED
S19
LED1 IS TURNED ON IN RED, LED2 IS TURNED ON IN GREEN
S20

l) <u>1(l)/27(l)</u>: communicate information describing the characteristics[19] of the [mobile] device or the battery, for use by the base unit to provide power transfer to the receiver and to the [mobile] device and the battery according to their particular charging characteristics.

Nakamura in view of *Odendaal* and *Calhoon* discloses/suggests this limitation for the reasons discussed above. (Ex. 1002, ¶¶234-236; §§IX.A.1(a)-(k).) As explained, *Nakamura*'s (*Nakamura-Odendaal-Calhoon*'s) configurations are configured to adjust the charging power level to accommodate different mobile devices (*e.g.*, cellphones, laptops) with different batteries having different charging characteristics. (§§IX.A.1(a)-(b), IX.A.1(e)-(g)); Ex. 1005, FIGS. 3-5, ¶¶0016-0019, 0021, 0063, 0099; Ex. 1006, ¶¶0033, 0037, 0040 ("different battery packs can have different charging requirements"), 0044 ("battery packs may have different power requirements"), 0049; Ex. 1002, ¶235.) *Nakamura* discloses that mobile device 2/3 communicates information signals (*e.g.*, "information on consumed power") describing the power/charge characteristics of the device/battery for use by apparatus 1 ("**base unit**") to adjust and provide the appropriate power to the device, its "receiver," and "battery" according to their particular charging characteristics

[19] For purposes of this proceeding, Petitioner assumes "the characteristics" to be "charging characteristics." (§VIII, n.4.)

(*e.g.*, small/medium/large). (*Id.*; Ex. 1005, ¶¶0077-0078, 0083-0085, 0090-0091, FIGS. 3-5.)

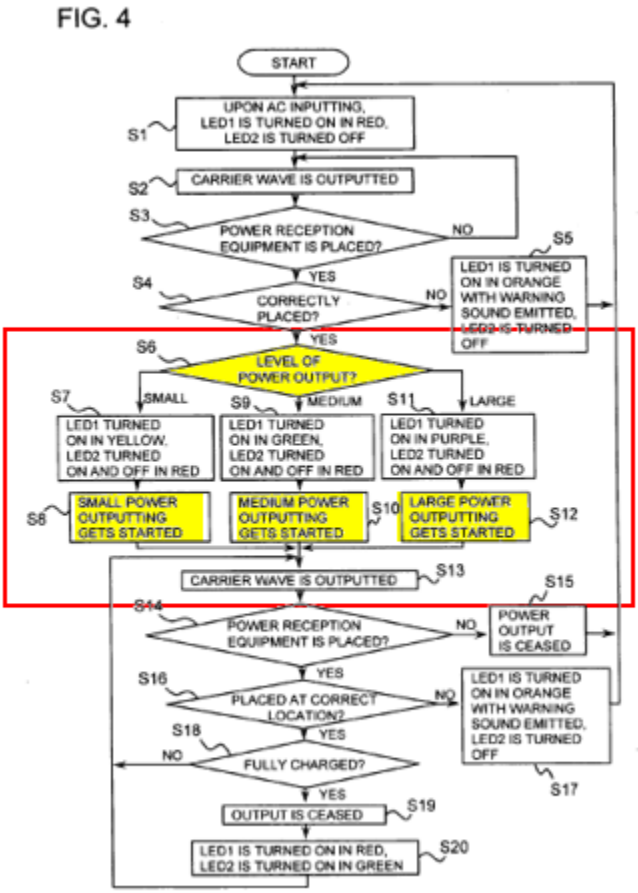

(*Id.*, FIG. 4 (annotated); Ex. 1002, ¶235; §§IX.A.1(a)-(k).) For reasons explained, the *Nakamura-Odendaal-Calhoon* device/system would have been configured to include such features to ensure the appropriate power is provided to a properly positioned/aligned/detected/verified/authenticated device 2/3 and receiver, consistent with operations/configurations contemplated by *Nakamura-Calhoon-Odendaal*. (§§IX.A.1(a)-(k); Ex. 1002, ¶236.) A POSITA would have had the same

motivation, skills, knowledge in the art, and expectation of success as those explained above for the modifications involving *Calhoon* and *Odendaal*, in configuring the above features that meet limitation 1(l)/27(l). (*Id.*)

X. DISCRETIONARY DENIAL IS NOT APPROPRIATE

Discretionary denial under §325(d) is not appropriate here given the prior art combinations and arguments raised during prosecution are not the same or substantially similar to the grounds presented herein. For instance, the Office did not consider the disclosures of *Nakamura* (which was not considered during examination) in light of the teachings of *Odendaal*, and/or *Calhoon*. (*See generally* Ex. 1004; Ex. 1001, Cover.) *Nakamura* discloses, *inter alia*, a universal base unit for charging different devices/batteries having different charging characteristics just like the limitations added to the claims prior to allowance and *Odendaal* discloses well-known use of planar coils. (Ex. 1004, 53, 86-96; §IX.A.1.) Moreover, while other references by "Calhoon" submitted during prosecution (Ex. 1001, Cover, 2-3) have similar disclosures to *Calhoon* asserted here (Ex. 1006), *Calhoon* (Ex. 1006) was not identified or applied by the examiner. Nor were any disclosures of the other Calhoon reference substantively applied/relied upon by the examiner. (*See* citations to Ex. 1004 in §VII.) Indeed, the applicant never substantively disputed the examiner's explanations/rationale concerning any of the prior art relied upon to reject features/limitations that *Calhoon* is used for in this petition. (*See, e.g.*, §IX.A.1(d); Ex. 1004, 171-173, 180-182, 265-275.) Nonetheless, the Office/examiner thus erred in ultimately allowing the now challenged claims without considering any overlapping teachings/suggestions in the Calhoon-submitted

references and those in *Calhoon* (Ex. 1006) (§IX) as they disclose/suggest features relevant to the patentability of the challenged claim(s), especially in context of *Nakamura*, which was never considered by the Office. (§§IX.A.1(c)-(l).)

Further, the *Fintiv* factors do not justify denying institution. *Apple Inc. v. Fintiv, Inc.*, IPR2020-00019, Paper 11 (P.T.A.B. Mar. 20, 2020) (precedential).

The **first factor** (stay) is neutral, because Samsung has not yet moved for a stay. *See Hulu LLC v. SITO Mobile R&D IP, LLC*, IPR2021-00298, Paper 11 at 10-11 (P.T.A.B. May 19, 2021).

The **second factor** (proximity) is neutral. "The PTAB will weigh this factor against exercising discretion to deny institution under *Fintiv* if the median time-to-trial is around the same time or after the projected statutory deadline for the PTAB's final written decision" (FWD). (Ex. 1034, 9.) The median time from filing to trial in the Eastern District of Texas is 19 months, meaning trial will be *no earlier* than May 2024 (Ex. 1035, 35), and is close to the court's scheduled jury selection for August 5, 2024 (Ex. 1036, 1). With this petition filed in June 2023, a FWD may be expected by December 2024, not long after the trial date.

That the FWD may come after the trial date is not dispositive. The Board has granted institution in cases where the FWD issued months after the scheduled trial date. The Board has relied on various justifications, such as diligence in filing the petition, a stipulation not to pursue the asserted grounds in litigation, minimal

investment in litigation, and the merits of the invalidity challenge being strong. *Verizon Business Network Services, Inc. v. Huawei Techs. Co*., IPR2020-01141, Paper 12 (Jan. 14, 2021). The same factors are present in this case. For instance, Petitioner diligently filed this petition (challenging long, convoluted claims) in advance of the one-year bar date and within four months of PO's infringement contentions in the Texas Litigation. (Exs. 1032-1033.) Fact discovery is not anticipated to close until March 18, 2024. (Ex. 1036, 3.) Expert discovery has not yet started. (*Id.*) And the *Markman* hearing has been scheduled for February 6, 2024, after the filing of this petition. (*Id.*)

The **third factor** (investment) also weighs against denial. The district court case is in the early stages. Fact discovery is in its infancy and the parties have not engaged in expert discovery. (Ex. 1036, 3.) The parties have not yet identified terms for construction. (*Id.*, 3-4.) Nor have there been any substantive orders in this case.

The **fourth factor** (overlap) also weighs against denial. Petitioner hereby stipulates that, if the IPR is instituted, Petitioner will not pursue the IPR grounds in the district court litigation. Thus, "[i]nstituting trial here serves overall system efficiency and integrity goals by not duplicating efforts and by resolving materially different patentability issues." *Apple, Inc. v. SEVEN Networks, LLC*, IPR2020-00156, Paper 10 at 19 (P.T.A.B. June 15, 2020); *see also Sand Revolution II, LLC v.*

Continental Intermodal Group-Trucking LLC, IPR2019-01393, Paper 24 at 12 (P.T.A.B. June 16, 2020).

While the **fifth factor** (parties) may weigh slightly in favor of denial, because Petitioner and PO are the same parties as in district court, based on a "holistic view," the factors favor institution. *Samsung Elecs. Co. Ltd. v. Dynamics Inc.*, IPR2020-00505, Paper 11 at 15 (P.T.A.B. Aug. 12, 2020).

Even if the Board determines that the above factors favor denial, the Board should not discretionarily deny institution, because this petition presents compelling merits. *See Commscope Tech. LLC v. Dali Wireless, Inc.*, IPR2022-01242, Paper 23 at 4-5 (P.T.A.B. Feb. 27, 2023) (precedential). As discussed above (§§VII, IX) and demonstrated in the file history (Ex. 1004), the applicant did not substantively dispute that most of the claimed elements now recited in the challenged claim(s) were disclosed/suggested in the prior art (*see supra*), and the universal base unit features added to the claims just before allowance are disclosed and/or suggested in the prior art presented here. (§§IX.A.1(a)-(l).) The remaining features were likewise known in the art, and in fact, are largely concepts used in inductive power systems. (§IX.A.) Moreover, this Petition is the ***sole*** challenge to claims 1/27 of the '440 patent before the Board—a "crucial fact" favoring institution. *Google LLC v. Uniloc 2017 LLC*, IPR2020-00115, Paper 10 at 6 (May 12, 2020).

XI. CONCLUSION

Accordingly, Petitioner requests institution of IPR for the challenged claims based on the specified grounds.

Respectfully submitted,

Dated: June 27, 2023

By: /Joseph E. Palys/
Joseph E. Palys (Reg. No. 46,508)
Counsel for Petitioner

CERTIFICATE OF COMPLIANCE

Pursuant to 37 C.F.R. § 42.24(d), the undersigned certifies that the foregoing Petition for *Inter Partes* Review of U.S. Patent No. 9,577,440 contains, as measured by the word-processing system used to prepare this paper, 13,829 words. This word count does not include the items excluded by 37 C.F.R. § 42.24 as not counting towards the word limit.

Respectfully submitted,

Dated: June 27, 2023

By: /Joseph E. Palys/
Joseph E. Palys (Reg. No. 46,508)
Counsel for Petitioner

CERTIFICATE OF SERVICE

I hereby certify that on June 27, 2023, I caused a true and correct copy of the foregoing Petition for *Inter Partes* Review of U.S. Patent No. 9,577,440 and supporting exhibits to be served via express mail on the Patent Owner at the following correspondence address of record as listed on the USPTO's Patent Center:

NK Patent Law
4101 Lake Boone Trail
Suite 218
Raleigh, NC 27607

By: /Joseph E. Palys/
Joseph E. Palys (Reg. No. 46,508)