UNITED STATES PATENT AND TRADEMARK OFFICE

BEFORE THE PATENT TRIAL AND APPEAL BOARD

SAMSUNG ELECTRONICS CO., LTD.
Petitioner

v.

MOJO MOBILITY INC.
Patent Owner

Patent No. 9,577,440

PETITION FOR *INTER PARTES* REVIEW
OF U.S. PATENT NO. 9,577,440

TABLE OF CONTENTS

I. INTRODUCTION 1

II. MANDATORY NOTICES 1

III. PAYMENT OF FEES 2

IV. GROUNDS FOR STANDING.....2

V. PRECISE RELIEF REQUESTED AND GROUNDS 2

VI. LEVEL OF ORDINARY SKILL 3

VII. THE ’440 PATENT 4

VIII. CLAIM CONSTRUCTION 5

IX. DETAILED EXPLANATION OF GROUNDS.....7

A. Ground 1: Claims 3 and 13 are obvious over *Nakamura* in view of *Odendaal* and *Calhoon* 7

1. Claim 3 7

2. Claim 13 77

X. DISCRETIONARY DENIAL IS NOT APPROPRIATE 82

XI. CONCLUSION.....86

LIST OF EXHIBITS

Ex. 1001	U.S. Patent No. 9,577,440
Ex. 1002	Declaration of R. Jacob Baker, Ph.D., P.E.
Ex. 1003	Curriculum Vitae of R. Jacob Baker, Ph.D., P.E.
Ex. 1004	Prosecution History of U.S. Patent No. 9,577,440
Ex. 1005	U.S. Patent Application Publication No. 2005/0068019 ("*Nakamura*")
Ex. 1006	U.S. Patent Application Publication No. 2005/0127868 ("*Calhoon*")
Ex. 1007	U.S. Patent Application Publication No. 2006/0202665 ("*Hsu*")
Ex. 1008	U.S. Patent No. 6,960,968 ("*Odendaal*")
Ex. 1009	U.S. Patent No. 6,489,745 ("*Koreis*")
Ex. 1010	U.S. Patent No. 6,366,817 ("*Kung*")
Ex. 1011	Physics, Henry Semat et al., Rinehart & Co., Inc., 1958, Chapters 29-32 ("*Semat*")
Ex. 1012	RESERVED
Ex. 1013	International Patent Application Publication No. WO1996040367 ("*WangII*")
Ex. 1014	RESERVED
Ex. 1015	U.S. Patent No. 4,942,352 ("*Sano*")
Ex. 1016-1018	RESERVED
Ex. 1019	U.S. Patent No. 5,733,313 ("*Barreras*")
Ex. 1020-1023	RESERVED
Ex. 1024	U.S. Patent No. 7,378,817 ("*CalhoonII*")

Ex. 1025	International Patent Application Publication No. WO2003/096361 ("*Cheng*")
Ex. 1026	International Patent Application Publication No. WO2004/038888 ("*ChengII*")
Ex. 1027	Spiral Inductor Design for Quality Factor, Sang-Gug Lee et al., Journal of Semiconductor Technology and Science, Vol. 2. No. 1, March 2002 ("*Lee*")
Ex. 1028	U.S. Patent Application Publication No. 2001/0055207 ("*Barbeau*")
Ex. 1029	AN710 Antenna Circuit Design for RFID Applications
Ex. 1030	U.S. Patent No. 6,606,247 ("*Credelle*")
Ex. 1031	U.S. Patent Application Publication No. 2009/0072784A1 ("*Erickson*")
Ex. 1032	Mojo Mobility's Infringement Contentions in *Mojo Mobility Inc. v. Samsung Elecs. Co., Ltd.*, No. 2:22-cv-00398 (E.D. Tex.) (February 28, 2023)
Ex. 1033	Mojo Mobility's Infringement Chart for U.S. Patent No. 9,577,440 (Ex. 2) accompanying Mojo Mobility's Infringement Contentions in *Mojo Mobility Inc. v. Samsung Elecs. Co., Ltd.*, No. 2:22-cv-00398 (E.D. Tex.) (February 28, 2023)
Ex. 1034	Memorandum from Director Vidal (June 21, 2022)
Ex. 1035	Federal Court Management Statistics (December 2022)
Ex. 1036	Docket Control Order of March 28, 2023, *Mojo Mobility Inc. v. Samsung Elecs. Co., Ltd.*, No. 2:22-cv-00398 (E.D. Tex.)
Ex. 1037	GB Patent Application Publication No. 2202414 ("*Logan*")
Ex. 1038	U.S. Patent No. 7,226,442 ("*Sheppard*")
Ex. 1039	Watson, J., Mastering Electronics, Third Ed., McGraw-Hill, Inc. (1990) ("*Watson*")

Ex. 1040	Sedra, A., *et al.*, Microelectronic Circuits, Fourth Ed., Oxford University Press (1998) ("*Sedra*")
Ex. 1041	U.S. Patent Application Publication No. 2006/0145660A1 ("*Black*")
Ex. 1042	U.S. Patent No. 5,780,992 ("*Beard*")
Ex. 1043	U.S. Patent No. 6,912,137 ("*Berghegger*")

I. INTRODUCTION

Samsung Electronics Co., Ltd. ("Petitioner") requests *inter partes* review of claims 3 and 13 ("challenged claims") of U.S. Patent No. 9,577,440 ("the '440 patent") (Ex. 1001) assigned to Mojo Mobility Inc. ("PO"). As explained below, the challenged claims should be found unpatentable and canceled.

II. MANDATORY NOTICES

Real Parties-in-Interest: Petitioner identifies the following as the real parties-in-interest: Samsung Electronics Co., Ltd. and Samsung Electronics America, Inc.

Related Matters: The '440 patent is at issue in the following matter(s):

- *Mojo Mobility Inc. v. Samsung Electronics Co., Ltd.*, No. 2-22-cv-00398 (E.D. Tex.) (asserting the '440 patent and also U.S. Patent Nos. 7,948,208, 11,292,349, 11,316,371, 11,201,500, 11,342,777, and 11,462,942) ("Texas Litigation"). (Ex. 1032)
- Petitioner is filing concurrently herewith a petition for *inter partes* review challenging claims 1 and 27 of the '440 patent.

The '440 patent issued from Application No. 13/115,811, which is a continuation of Application No. 11/669,113, and claims priority to four provisional applications (U.S. Provisional Application Nos. 60/763,816 (filed Jan. 31, 2006),

60/810,262 (filed Jun. 1, 2006), 60/810,298 (filed June 1, 2006), and 60/868,674 (filed Dec. 5, 2006)). (Ex. 1001, Cover, 2.)

Counsel and Service Information: Lead counsel: Joseph E. Palys (Reg. No. 46,508), and Backup counsel are (1) Naveen Modi (Reg. No. 46,224), (2) Howard Herr (*pro hac vice* admission to be requested). Service information is Paul Hastings LLP, 2050 M St., Washington, D.C., 20036, Tel.: 202.551.1700, Fax: 202.551.1705, email: PH-Samsung-MojoMobility-IPR@paulhastings.com. Petitioner consents to electronic service.

III. PAYMENT OF FEES

The PTO is authorized to charge any fees due during this proceeding to Deposit Account No. 50-2613.

IV. GROUNDS FOR STANDING

Petitioner certifies that the '440 patent is available for review and Petitioner is not barred or estopped from requesting review on the grounds identified herein.

V. PRECISE RELIEF REQUESTED AND GROUNDS

Claims 3 and 13 should be canceled as unpatentable based on the following grounds:

Ground 1: Claims 3 and 13 are unpatentable under pre-AIA 35 U.S.C. § 103(a) as being obvious over *Nakamura*, *Odendaal*, and *Calhoon*.

The ’440 patent claims priority to provisional applications dated in 2006. PO has stated in the Texas Litigation that the priority date for claims 3 and 13 is at least June 1, 2006 (and possibly three months earlier). (Ex. 1032, 6, 8.) For purposes of this proceeding, and without conceding any entitlement to such a date, Petitioner assumes the effective date for those claims is between March 1 and June 1, 2006.

Nakamura was filed on September 23, 2004 and published March 31, 2005, *Odendaal* was filed on June 26, 2002 and issued November 1, 2005, *Calhoon* was filed December 12, 2003 and published June 16, 2005, and thus each qualifies as prior art at least under pre-AIA 35 U.S.C. §§ 102(a), 102(e). None of these references were substantively considered during prosecution. (*See generally* Ex. 1004; §X.)

VI. LEVEL OF ORDINARY SKILL

A person of ordinary skill in the art as of the effective date of the ’440 patent (“POSITA”) would have had at least a master’s degree in electrical engineering, or a similar discipline, and two or more years of experience with wireless charging systems, including, for example, inductive power transfer systems. (Ex. 1002, ¶¶20-21.)[1] More education can supplement practical experience and vice versa. (*Id.*)

[1] Petitioner submits the declaration of R. Jacob Baker, Ph.D., P.E. (Ex. 1002), an expert in the field of the ’440 patent. (Ex. 1002, ¶¶1-13; Ex. 1003.)

VII. THE '440 PATENT

The '440 patent generally relates to an inductive power source and charging system including a base unit with a primary coil and a mobile device with a secondary coil. (Ex. 1001, Title, Abstract, 1:35-38, 3:35-67, 4:58-5:56.) During prosecution, in response to repeated rejections demonstrating the claimed features were disclosed, the applicant continued to add new features. (*See, e.g.*, Ex. 1004, 86-112, 114-142,[2] 163-189, 264-299, 320-332, 604-617, 685, 692-694, 1605-1618).) The examiner finally allowed the claims without explanation after amended to recite a "universal base unit" for charging "different" devices. (*Id.*, 53, 95-96.) Nonetheless, such features (as the others) in the challenged claims were known and obvious, including a "universal" base unit. (§IX; Ex. 1002, ¶¶22-56, 60-279; Exs. 1005-1011, 1013, 1015, 1019, 1024-1031, 1037-1043.)

[2] The examiner properly noted that "all the claimed elements…were known in the prior art" (Ex. 1004, 109-110, 123-124) and reliance on "a large number of references in a rejection, does not, without more, weigh against the obviousness of the claimed invention." (Ex. 1004, 109-110 (citing *In re Gorman*, 933 F.2d 982 (Fed. Cir. 1991)).)

VIII. CLAIM CONSTRUCTION

The Board only construes the claims when necessary to resolve the underlying controversy. *Toyota Motor Corp. v. Cellport Systems, Inc.*, IPR2015-00633, Paper No. 11 at 16 (Aug. 14, 2015). For purposes of this proceeding, Petitioner believes that no special constructions of the claim terms, other than the term identified below, are necessary to assess whether the challenged claims are unpatentable over the asserted prior art.[3] (Ex. 1002, ¶¶58-59.)

Claim 3 recites a "**means for <u>avoiding overcharging one or both of the mobile device and battery inductively</u>**." (Ex. 1001, 28:7-8.) The "means for" language lacks sufficient definite meaning as the name for structure, and thus, the

[3] Petitioner reserves all rights to raise claim construction and other arguments, including challenges under 35 U.S.C. §112, in district court as relevant to those proceedings. *See Target Corp. v. Proxicom Wireless, LLC*, IPR2020-00904, Paper 11 at 11–13 (Nov. 10, 2020). A comparison of the claims to any accused products in litigation may raise controversies that are not presented here given the similarities between the references and the patent. Petitioner does not concede the claims are definite, have specification support, etc., and thus reserves the right to address any associated §112 issues in other proceedings.

term should be construed as a means-plus-function term. *Williamson v. Citrix Online, LLC*, 792 F.3d 1339, 1347-49 (Fed. Cir. 2015).

The identified function is the underlined text above. The corresponding structure identified in the specification includes a battery regulator chip and/or a circuit that measures parameters of a battery (e.g., voltage, degree of charging, temperature, etc.) and uses an internal program to regulate the power drawn from a circuit to ensure overcharging does not occur (where "[t]he circuit could also include LEDs to show the receiver being in the presence of a magnetic field from the charger, complete charge LEDs and/or audible signals") and/or equivalents thereof. (Ex. 1001, 11:8-16.) (*See also* Ex. 1004, 171 (citing ¶0064 (*id.*, 1669)).) *See Default Proof Credit Card Sys., Inc. v. Home Depot U.S.A., Inc.*, 412 F.3d 1291, 1298 (Fed. Cir. 2005). Further, in the Texas Litigation, PO contends that "[a]t least ***four forms*** of overcharge protection in the accused products satisfy this claim element, individually and combined."[4] (Ex. 1033, 56, 123; Ex. 1032.) Without conceding such structures/forms meet the claimed "means for avoiding overcharging," Petitioner also addresses PO's *four forms* and their equivalents. (§IX.A.1(f).)

[4] Emphasis is added herein unless indicated otherwise.

IX. DETAILED EXPLANATION OF GROUNDS

A. Ground 1: Claims 3 and 13 are obvious over *Nakamura* in view of *Odendaal* and *Calhoon*

1. Claim 3

a) A system for use with a mobile device for charging or powering the mobile device inductively by a universal base unit for charging of different mobile devices and/or batteries of different charging characteristics associated therewith, comprising:

To the extent limiting, *Nakamura* discloses this limitation. (Ex. 1002, ¶¶61-74, 87-105; §§IX.A.1(b)-(m).) *Nakamura* discloses a "**mobile device**" (*e.g.*, device 2/3) in a power charging system ("**system**", *e.g.*, device 2/3 and apparatus 1) that is "**for charging or powering the mobile device inductively by a universal base unit** (*e.g.*, apparatus 1) **for charging of different mobile devices and/or batteries** (*e.g.*, device 2/3 and/or its battery) **of different charging characteristics**." (§IX.A.1(d); Ex. 1005, ¶0018 (system includes apparatus ("**base unit**") with primary side circuit and coil(s) and power reception equipment ("**mobile device**") with a secondary side coil "magnetically coupled to the primary side coil," such that "a single power transmission apparatus ("**universal base unit**") can supply power [inductively] to *different types of power reception equipment*" and batteries with different power/charging requirements ("**charging characteristics**")), FIGS. 1A-2B (below), Abstract, ¶¶0003, 0016-0017, 0044, ¶0062 ("***battery*** of the portable telephone 2 or the notebook PC 3…***the battery is charged by…magnetic coupling***"),

¶0063 ("***apparatus 1 can charge even batteries of electronic equipment different in power***…" (e.g., phone 2/PC 3)), 0064, 0065 (transformer formed through "magnetic coupling"), 0110; §§IX.A.1(b)-1(d), §§IX.A.1(h), 1(m); Ex. 1002, ¶¶88-92.)

FIG. 1A

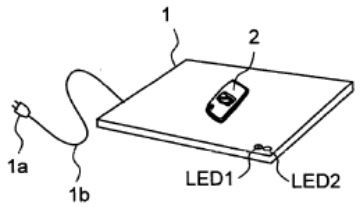

FIG. 1B

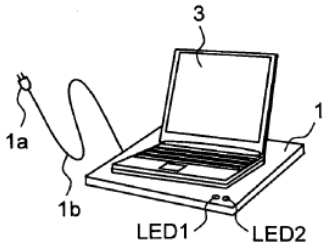

FIG. 2A

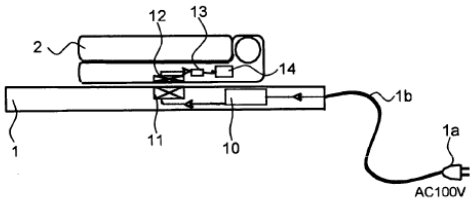

Primary coil can have multiple taps (*e.g.*, FIG. 3) or can include "plurality of coils" (*e.g.*, FIG. 5), which allows the apparatus ("**universal base unit**") to inductively select/provide different power/voltage levels depending on power requirements ("**charging characteristics**") of device 2/3 ("**mobile device**"). (Ex. 1005, ¶0019.)

FIG. 3

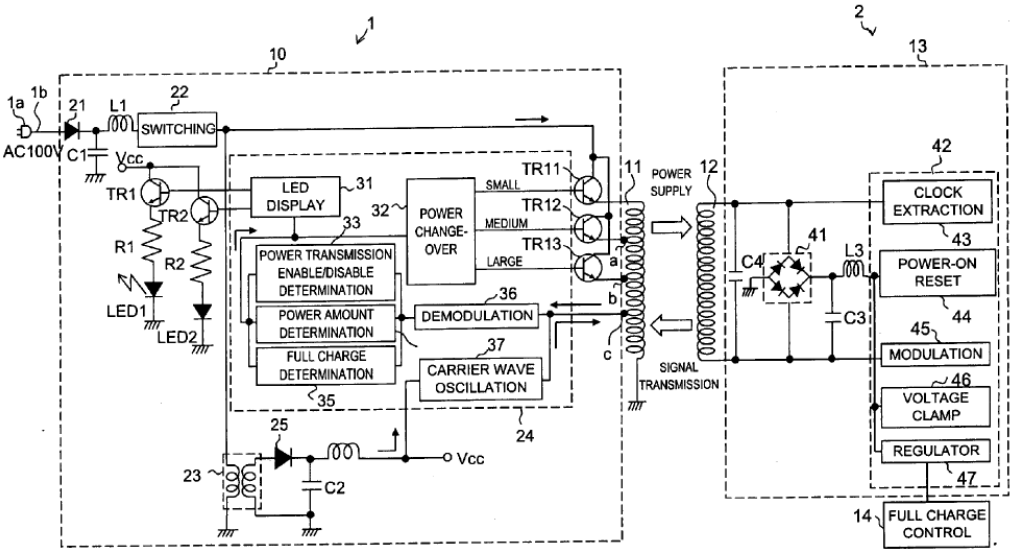

FIG. 5

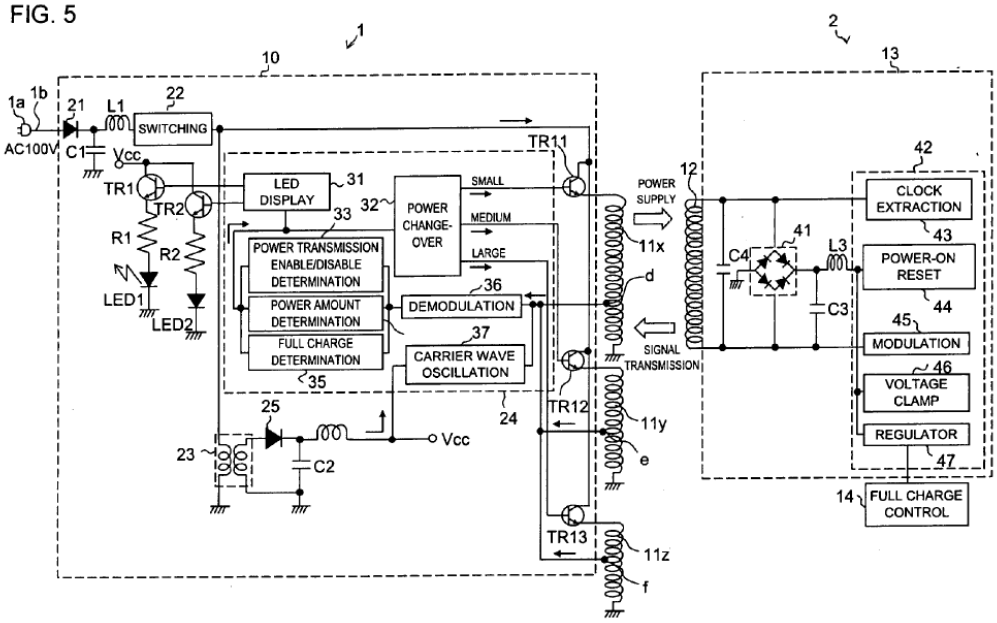

(*Id.*, FIGS. 3, 5; Ex. 1002, ¶93.)

Information signals transmitted from device 2/3 provides charging characteristic information that is used by apparatus 1 to determine the proper power/voltage level. (Ex. 1005, ¶¶0077-0078, 0083-0085, 0090, 0091 (transistor is

"selected…according to the level of power to be transmitted determined from the signal containing the '*information on consumed power*' received from the portable telephone 2," which allows "a coil for transmitting power [to] be selected, and *power required*…[to] be transmitted"), FIGS. 3-5; Ex. 1002, ¶¶94-95.) Thus, *Nakamura's* "**universal base unit**" is capable of charging different mobile devices/batteries with particular/different "**charging characteristics**," consistent with POSITA's state-of-art knowledge. (Ex. 1002, ¶96; Ex. 1005, ¶¶0005-0015; Ex. 1006, ¶¶0033, 0037, 0040, 0044-0045, 0049; §§IX.A.1(b)-(m).)

Nakamura's discussions of similar components/features/functionalities relate and are applicable to various configurations (exemplified by the figures), which exemplify such a "**system**." (Ex. 1002, ¶¶97-105; Ex. 1005, FIG. 3, ¶¶0067, 0068-0075, 0090-0092, 0096-0155).) For example, features/functionalities concerning FIGS. 1A-1B, 2A-2B (below), and 3 are applicable to each other and FIG. 5. (Ex.

1002, ¶¶97-98, 101; Ex. 1005, ¶¶0063, 0067, 0063, 0090 (same symbols and descriptions except a "difference" in use of multiple primary coils 11x/11y/11z).)

FIG. 2A

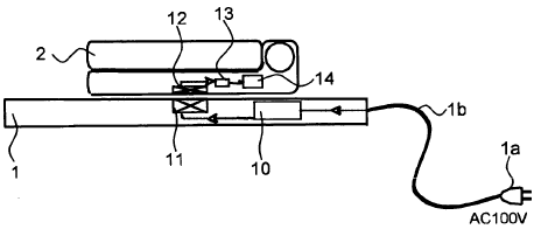

FIG. 2B

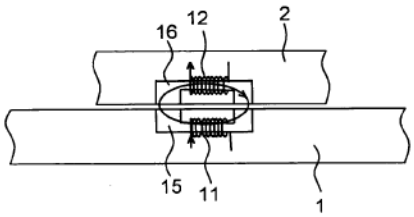

FIG. 3 relates to components/features of apparatus 1 ("**base unit**") that are similar to those for FIGS. 1A, 2A, 2B, and FIG. 5 (*e.g.*, smoothing/rectifier/switching circuits (L1/C1/21-22), transistors TR11/TR12/TR13, circuits 33-37, etc.). (Ex. 1005, ¶¶0067-0073, 0090-0092.) *Nakamura* describes similar/applicable components/features associated with device 2/3 ("**mobile device**") (*e.g.*, IC 42, components 41-46, C4, L3-C3, regulator 47, full-charge control 14, etc.) (*Id.*, ¶¶0074-0075; Ex. 1002, ¶¶99-100.) The operations associated with FIG. 4 (below) are also applicable to such various configurations/features (*e.g.*, FIGS. 3 and 5). (*Id.*; Ex. 1005, ¶¶0076-0089.)

FIG. 4

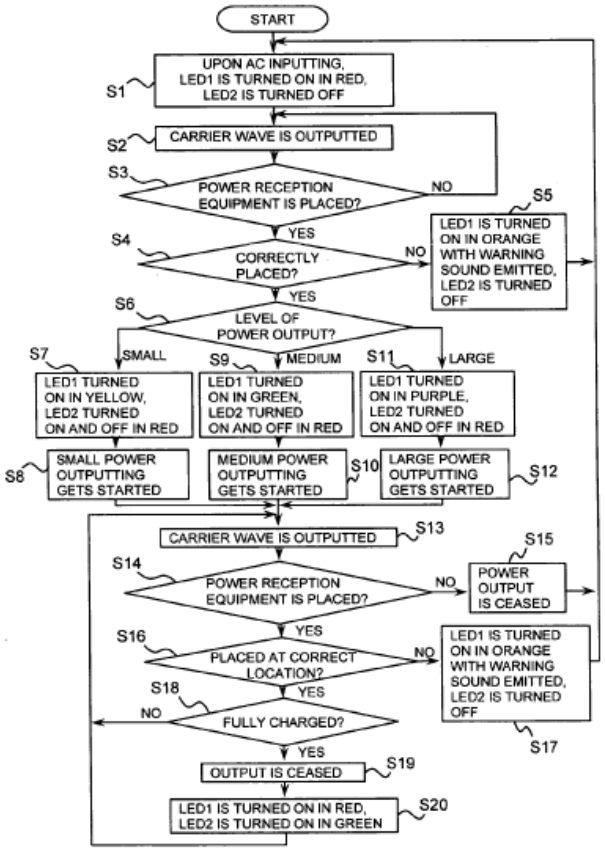

Similarly, the teachings/configurations relating to *e.g.*, FIGS. 6, 8-9, 11A-25, etc. are also applicable to the various configurations/operations associated with, *e.g.*, FIGS. 3-5. (Ex. 1002, ¶¶101-105; Ex. 1005, ¶¶0080-0081, 0089, 0092-0094, 0102-0124, 0125-0155; *see also* §§IX.A.1(b)-(m).)

b) a universal base unit including one or more primary coils therein, each primary coil having a generally planar shape so that when a current is passed through the primary coil a magnetic field is generated in a direction substantially perpendicular to the plane of the primary coil;

Nakamura in view of *Odendaal* discloses and/or suggests this limitation. (Ex. 1002, ¶¶106-138.) Regarding FIGS. 2A-2B (below), *Nakamura* discloses how primary coil 11 (FIG. 3) / primary coils 11x-11z (FIG. 5) (orange below) ("**one or more primary coils**") are/can be positioned within the above-discussed apparatus 1 ("**universal base unit**"), and arranged behind and parallel to a surface thereof (Ex. 1005, ¶0064), which (as with other configurations (*e.g.*, FIGS. 3, 5, etc.)) provides power through magnetic coupling for device 2/3 (*id.*, ¶0065). (§IX.A.1(a); Ex. 1002, ¶¶107-108; Ex. 1005, ¶¶0017-0019, 0064-0065, 0068-0088, 0090-0091.)

FIG. 2A

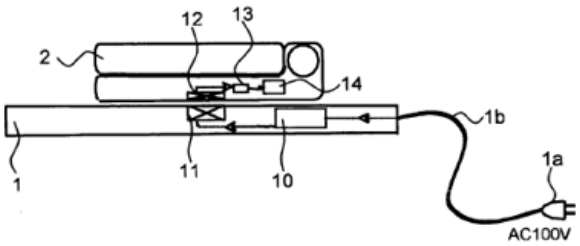

FIG. 2B

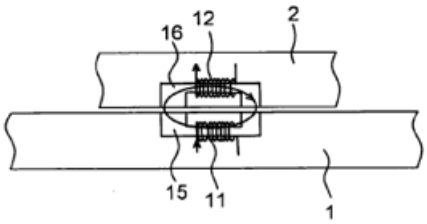

FIG. 3

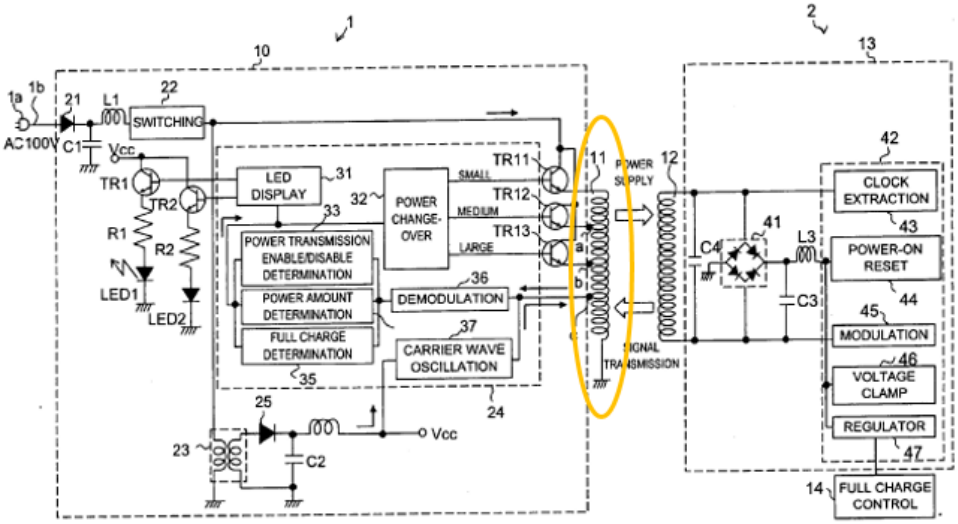

FIG. 5

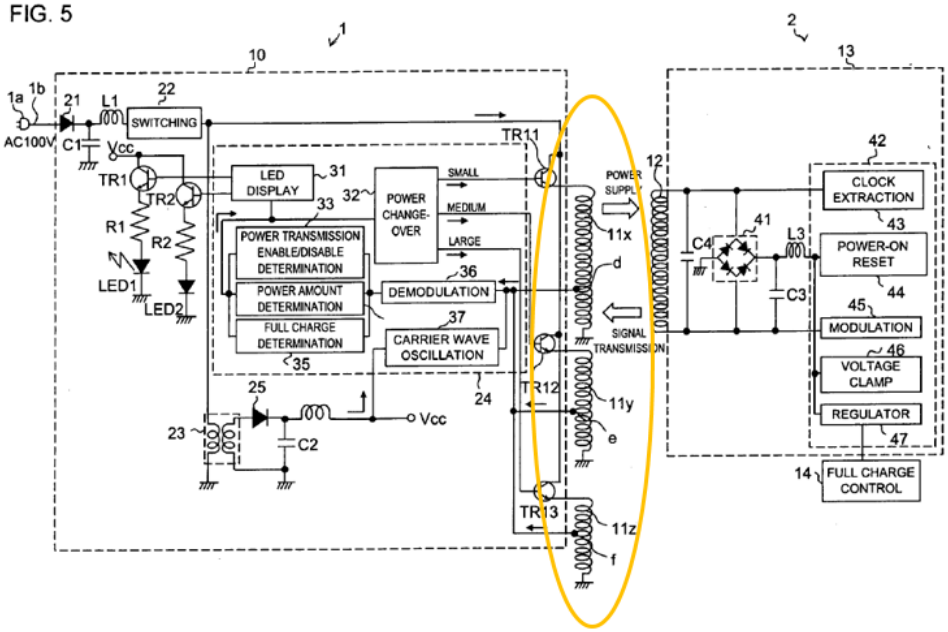

Apparatus 1 may be configured to be embedded in a surface of a desk/shelf/locker/holder/dashboard/wall/mat/floor/fabric, etc. (Ex. 1005, FIGS. 13A-20, ¶¶0107-0124, 0153, 159.) In certain such configurations, apparatus 1 and its components (coil(s)) are embedded, positioned, arranged, behind a surface of

apparatus 1 or its host component (*e.g.*, desk/shelf/mat, etc.) to allow a present and properly positioned device/battery to be inductively powered/charged, consistent with that known in the art. (*Id.*; *id.*, ¶0008 (discussing JP2001-16789 (primary coil "installed below a body placement section of the charger")); Ex. 1002, ¶109; §IX.A.1(a).)

The primary coil(s) each generates a "**magnetic field**" "**when a current is passed through the primary coil**" such that the "**magnetic field is generated in a direction substantially perpendicular to the plane of the primary coil**," including in the modified system below. (Ex. 1002, ¶110.) The power/voltage inductively transmitted between the coils involves a magnetic field. (*Supra*; Ex 1005, ¶¶0018, 0062, 0065, 0077-0080, 0090-0091, FIGS. 3-5, Abstract, Claim 2; Ex. 1002, ¶110; §IX.A.1(a).)

Apparatus 1 components (*e.g.*, transistors TR11/TR12/TR13, components 32-35, etc.) activate coil(s) (via tap(s) (FIG. 3) or coils 11x/11y/11z) to transfer appropriate voltage/power (determined from "consumed power" information of device 2/3) (Ex. 1005, ¶¶0069-0071, 0077, 0083-0085, 0090-0091, FIGS. 3-5). In operation, pulsed voltage is applied across a selected tap(s)/coil, thereby allowing power to be transmitted from a selected/activated primary tap/coil to secondary coil 12 of a detected and "correctly placed" device 2/3 via magnetic coupling. (*Id.*; *id.*, ¶¶0065, 0079-0082, 0084; Ex. 1002, ¶111.)

By applying pulsed voltage to an activated primary coil, a **current** necessarily passes through the primary coil, consistent with known inductive-based power transfer techniques/technologies. (Ex. 1002, ¶¶112-113; Ex. 1005, ¶¶0065, 0076-0087, 0090-0091.) Moreover, a POSITA would have understood that the activated primary coil, due to the current flow, generates a **magnetic field** in a direction **substantially perpendicular** to the surface of the apparatus 1 (or host of apparatus 1 (*e.g.*, desk/table/shelf/mat, etc.)) and the plane of the activated primary coil for powering/charging device 2/3 or its battery. (Ex. 1002, ¶¶114-117.) *Nakamura*'s FIG. 2B (annotated below) discloses a magnetic field (**blue**) that is generated by the inductive/magnetic coupling between coils 11 and 12 that is perpendicular (**green**) to a plane of the surface of apparatus 1 and device 2/3 and their coils, consistent with known inductive power/data transfer configurations.

FIG. 2B

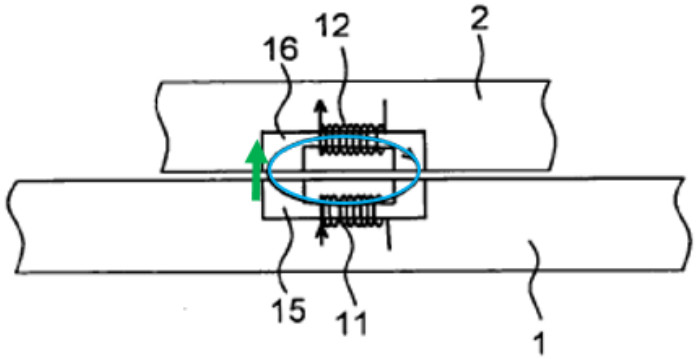

(Ex. 1002, ¶¶113-117; Ex. 1005, Abstract, ¶¶0018 ("magnetically coupled" coils"), 0062, 0065 (coils 11 and 12 "constitute a transformer through magnetic coupling" where "when the pulse voltage [and thus current]…is applied across the primary side coil 11, a voltage is induced across the secondary side coil 12 by magnetic coupling…"), 0079 (power transmission efficiencies relating to the presence/position of device 2/3 to apparatus 1 where "a high coupling degree in magnetic coupling is established"), 0080-0082 ("highest coupling degree in magnetic coupling" occurs with 0 mm positional/alignment deviations), FIGS. 11A-11B, 0090-0091; Ex. 1011, 557-562, 593-594, 601; Ex. 1009, 2:62-3:8 ("when magnetic field lines are approximately 90 degrees to the first part of the transformer when the receiving coil and core are placed within the field, current is inducted into the computing device 18"), 1:54-2:18, 3:20-4:11, FIGS. 1-3; Ex. 1010, FIGS. 1-5B, 8:55-9:52 (magnetic field (arrows 564-565) is generated that is perpendicular to plane 520 of charger), FIGS. 6A-10, 7:21-8:54, 9:53-10:22, 11:27-14:67; Ex. 1029, 3-4, 27-50, Ex. 1004, 1311-1386, 1363-1365.) Such features are also disclosed/suggested in the modified *Nakamura* device discussed below. (*Id.*; Ex. 1002, ¶117.)

While *Nakamura* does not expressly disclose that each of the primary coil(s) (11 or /11x/11y/11z) has "**a *generally planar shape* so that when a current is passed through the primary coil a *magnetic field* is generated in a direction**

substantially perpendicular to the plane of the primary coil," a POSITA would have found it obvious to configure the *Nakamura* system to implement/use planar coils for the primary-side (and also secondary/receiver-side) in light of *Odendaal*'s teachings/suggestions, complemented by POSITA's state-of-art knowledge. A POSITA would have been motivated to consider/implement planar coils to facilitate and/or expand the versatility of applications contemplated by *Nakamura*, which utilize thin, compact, and/or planar-type designs/arrangements (*e.g.*, apparatus 1 embedded in the surface of a desk/table/locker/shelf/dashboard/mat/floor/rug, etc., cellphone/laptop 2/3, etc.) (Ex. 1002, ¶118; *supra*; §IX.A.1(a).)

A POSITA was aware of different types of inductive coil designs/options for power/data transfer, including related circuitry, tradeoffs, benefits/advantages, etc. associated with their use—*e.g.*, planar coils were known, as were their characteristics and design techniques implementing circuits/systems/devices that use them to achieve desired applications of contactless/inductive power/data transfer. (Ex. 1002, ¶¶119-123; Ex. 1027, 1-3 (planar spiral inductor); Ex. 1015, FIGS. 1-2, 3-4, 7-12, Abstract, 1:5-2:29, 2:64-3:27, 3:39-51 (thin coil, flat disc-like core), 5:5-47, 5:48-9:5; Ex. 1007, FIGS. 1-3, 6, 8A-9, ¶¶0002, 0006-0007, 0018-0025-0034; Ex. 1025, FIGS. 1, 3, 8-9, 13, 1:10-2:3, 2:5-12 (reasons to consider thin coil designs), 2:14-3:2, 4:19-32, 7:25-9:28, 12:27-32 (very thin printed coil), 14:4-17; Ex. 1026, FIGS. 1-2, 5 (conventional primary coil array arrangement), 9A-9C,

Abstract, 1:3-4:4 (conventional designs), 4:6-9:4, 11:4-15 (concentric selectively active flat coils); Ex. 1009, Abstract, FIGS. 1-3, 1:4-51, 1:54-2:26, 2:47-3:8 (flat configurations), 3:9-39 (thin flat coil), 4:18-60); Ex. 1024, FIGS. 3, 8-9, 1:12-15, 1:39-2:29, 9:41-53, 10:45-57, 11:60-13:4; Ex. 1028, Abstract, FIGS. 2-7, ¶¶0001, 0004-0007, 0025-0032, 0041; Ex. 1029, 1-4, 9-19 (planar, spiral coils); Ex. 1030, FIGS. 3-7B, 1:5-9, 1:59-61, 3:19-56, 4:62-567, 5:25-44; Ex. 1004, 870-928, 1010-1045, 1071-1104, 1311-1386, 1387-1454.)

A POSITA would have leveraged such knowledge when considering design/implementation options for the *Nakamura* system, and appreciated how various coil designs (including planar coils) would have improved the system based on given applications, taking into account factors, *e.g.*, size/weight, cost, efficiencies/performance, application, etc. (Ex. 1007, ¶0033) and considered potential tradeoffs/benefits provided by planar coils when contemplating ways to design/implement apparatus 1 / device 2/3. (Ex. 1002, ¶124.) One source of such guidance is *Odendaal*.

Odendaal is in the same field of endeavor as the ’440 patent and *Nakamura*, and (like *Nakamura*) discloses features that were reasonably pertinent to particular problems the ’440 patent inventor was trying to solve, given it also describes a system/techniques for powering/charging a mobile device/battery inductively. (§IX.A.1(a); Ex. 1002, ¶¶75-77, 125-126; Ex. 1001, 3:35-3:67; Ex. 1008, Title,

Abstract, Figs. 1A-4, 11-12, 1:5-3:57, 4:50-5:8, 5:24-28, 6:59-64.) Thus, the inventor and a POSITA (looking to address/solve such issues/problems relating to the design/implementation of a contactless/inductive charging system and/or those described by *Nakamura*) would have consulted teachings/suggestions like those in *Odendaal* and (consequently) been motivated to modify apparatus 1 (and device 2/3) to include planar (primary/secondary) coils to provide features like those discussed herein and claimed. (*Id.*)

Odendaal discloses the known use of planar-type inductor coils in a contactless/inductive power transfer system that transfers power via magnetic coupling, for, *e.g.*, charging a battery of a cellphone/computer/wearable items, etc. (Ex. 1008, FIGS. 1A-1B, 2A, 2C, 8E, 1:5-3:57.) *Odendaal* describes a planar resonator for wireless power transfer that exhibits characteristics of an integrated inductor-capacitor transformer. (*Id.*, 1:53-57.) The planar resonator includes a coil arrangement where spirals arranged on opposite sides of each other can be used for energy transfer "so that a battery of a cellphone could be charged without physical wires connecting the cellphone to a charger." (*Id.*, 1:60-67.) Depending on the physical arrangement and/or material used, the planar resonator "transfer[s] power across the 'interface-of-energy-transfer' (IOET) ***in either an electric or magnetic form, or both***." (*Id.*, 2:1-7.) Thus, while *Odendaal* discusses capacitive-type energy transfer, "[t]he physical arrangement and/or material can *permit transformer action*

with or ***without*** [such] capacitive energy transfer." (*Id.*, 2:7-10; *id.*, 2:65-3:5 (signal transfer between spiral coils "***by coupling of magnetic flux***"), 4:44-5:8, 6:1-18; Ex. 1002, ¶¶127-129.)

Odendaal explains that the planar coils of the planar power resonator "may have a thin and/or relatively flat top coil surface" and may have coils arranged in upper and lower configurations "with an air gap." (Ex. 1008, 2:44-54.) "The spiral-shaped conductor may comprise ***pcb spiral-wound conductors***" and "a battery charging circuit can be coupled to one of the first and second spiral shaped conductors, and load can be coupled to the other…" where "coupling between the battery charging circuit and the battery may comprise…***and/or magnetic coupling, wherein power is transferred by the coupling of…and/or magnetic flux across the IOET***." (*Id*., 2:55-64; Ex. 1002, ¶130.) Accordingly, *Odendaal* discloses inductive/contactless power system designs/configurations that use primary planar coil(s) in a power transmitting unit and planar coils in a power receiving unit (*e.g.*, cellphone) for charging the receiving unit's battery (Ex. 1008, 1:60-67, 2:55-3:5), consistent with that known in the art. (*Id.*, 1:23-31, 2:29-44, 3:65-67; state-of-art evidence above; Ex. 1002, ¶131.)

Upon considering *Odendaal* in context of state-of-art knowledge, a POSITA would have been motivated, and found obvious, to modify the *Nakamura* system to use planar "**primary coil**(s)" (11/11x/11y/11z) in apparatus 1 ("**universal base**

unit") (as well as complemented such a design with corresponding planar secondary/receiver coil(s) in device 2/3) to increase the versatility in the designs/arrangements compatible with the thin/planar-type applications *Nakamura* contemplates (*supra*; some illustrated below) and expand the applications/features of *Nakamura*'s contactless/inductive power/charge system/device, including different types of inductive power transmission apparatus arrangements and power reception equipment (*e.g.*, device 2/3). (*Id.*; *supra*; Ex. 1002, ¶132-134; Ex. 1005, FIGS. 1A-2B, 8-9, 13A-15B, 18-20, ¶¶0062-0075, 0090-0094, 0096-0156; Ex. 1008, 2:16-28 ("…a planar configuration for transferring power with isolation properties…[with] two separable structures on either side of the IOET…for example, a cellphone and its charger" where "no electrical contacts necessary at the IOET" and "[t]he physical structure may include a set of spiral coils on each side of the IOET, typically with each spiral being a conductor trace on a separate substrate, such as flex or printed circuit board (FR-4)."), 2:29-44, 3:65-67; Ex. 1002, ¶134.)

FIG. 1A

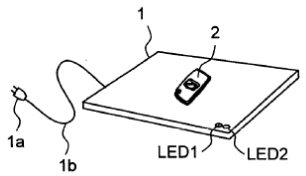

FIG. 1B

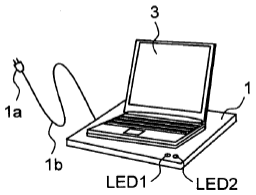

FIG. 8

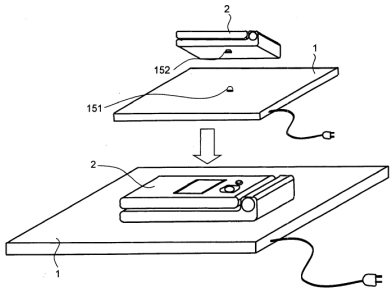

FIG. 13B

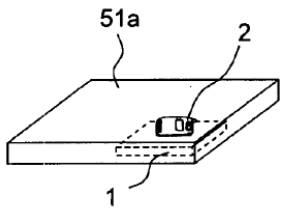

FIG. 13C

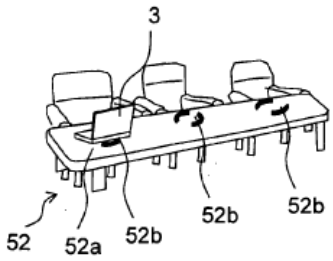

FIG. 13E

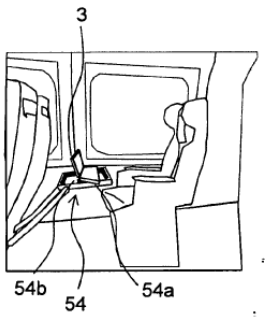

FIG. 14

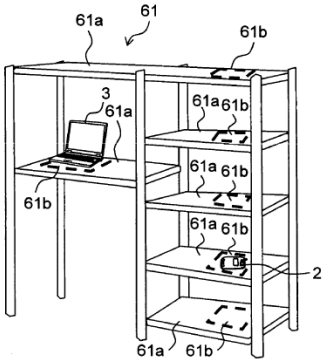

FIG. 18

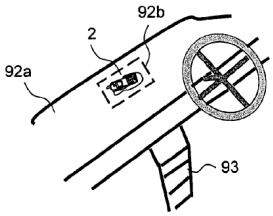

FIG. 19

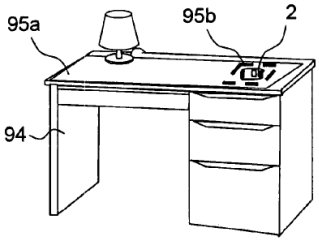

A POSITA would have been motivated by *Odendaal*'s teachings in light of *Nakamura*'s versatile configurations/applications. (§IX.A.1(a).) *Nakamura*'s exemplary applications (*e.g.*, §IX.A.1(a); Ex, 1005, FIGS. 1A-2B, 8-9, 13A-20) depict apparatus 1 embedded in thin planar-type host units, and thus reduced thickness of the primary coil(s) would have benefited the corresponding thickness/profile of apparatus 1 and its integration with such hosts. (Ex. 1002, ¶¶133-135; *see also* Ex. 1005, FIGS. 2A, 9 (thickness of the receiver coil placed near the device's back panel affecting thickness of cellphone).)

A POSITA would have thus been motivated to modify *Nakamura*'s configurations with planar coils to provide options with a thin and/or more compact power transmission apparatus (*e.g.*, apparatus 1) (and host objects) / power reception equipment (*e.g.*, device 2/3), consistent with features contemplated by *Nakamura*. (Ex. 1005, ¶¶0070 ("IC 24" of apparatus 1 "is an IC including [circuits 31-37], and ***takes on a shape of an IC chip for achieving a compact and lower-profile shape***"), 0075 ("IC 42 is in the shape of an IC chip so that ***a compact and lower-profile shape of the portable telephone 2 is achieved***"); Ex. 1002, ¶135.) Moreover, a POSITA would have appreciated that complementing primary-side planar coil(s) with secondary-side planar coil(s) would have provided for efficient energy transmission between the charger and receiver devices, especially where the coils were aligned to allow the perpendicular magnetic field generated by the primary coil(s) to be efficiently received by the receiving coil(s). (Ex. 1002, ¶¶53, 136.)

A POSITA would have been motivated and found obvious to configure the modified system/device with planar coils that would increase coupling areas between primary and secondary/receiver coils to improve efficiency/effectiveness of inductive power transfer (Ex. 1005, ¶¶0079-0082), which would have also been beneficial for configurations where apparatus 1 is embedded in desks/tables/shelves/floors/carpets, etc., by allowing device 2/3 to be charged at different parts of such surfaces (*id.*, ¶0159). (Ex. 1002, ¶¶132-133, 136.)

Implementing planar coils in apparatus 1 (and device 2/3) as discussed above would have predictably resulted in the *Nakamura-Odendaal* system/device to include features and perform functionalities like those described by *Nakamura* and discussed above, consistent with known planar-coil inductive power transfer configurations, including *e.g.*, where the primary coil(s) each would generate "**a magnetic field**" when "**a current is passed through the primary coil**" that would have been in "**a direction substantially perpendicular to the plane of the primary coil**," for reasons explained. (*Supra*; Ex. 1002, ¶137; Exs. 1006-1007, 1009-1011, 1015, 1024-1030.) Indeed, consistent with known coil designs where primary and secondary coils face each other and with *Nakamura*'s teachings (Ex. 1005, ¶¶0079-0083), a POSITA would have been motivated to configure the modified system such that when the primary planar coil(s) is/are aligned with the (planar) secondary coil in the modified *Nakamura* system to maximize magnetic coupling (energy transfer), a substantially perpendicular magnetic field relative to the plane of the primary coil(s) would be generated/received by the primary/secondary coils. (Ex. 1002, ¶137.) Other disclosed features would have been included in *Nakamura-Odendaal* (including as further modified below) for reasons explained. (*Id.*; §§IX.A.1(a)-(m).)

A POSITA would have had the skills/knowledge/rationale in light of the teachings/suggestions of *Nakamura*, *Odendaal*, and POSITA's state-of-art knowledge, to implement the above-modification while taking into account design

tradeoffs and techniques/technologies, with a reasonable expectation of success that the modified system/device operated as intended consistent with *Nakamura*'s teachings/designs. (Ex. 1002, ¶138.) The above-modification would have involved applying known technologies (*e.g.*, known planar coils and related circuitry (*e.g.*, *Odendaal*, state-of-art evidence above)) with wireless/inductive power transfer/charging systems (*Nakamura*/*Odendaal*) according to known methods (*e.g.*, using planar-type coils to transfer/receive power/data similar to known coil designs) to yield the predictable result of providing a thin form factor /"compact and lower-profile shape" (Ex. 1005, ¶¶0070, 0075) apparatus 1/host objects/device 2/3. (Ex. 1002, ¶138.) *KSR Int'l Co. v. Teleflex Inc.*, 550 U.S. 398, 416 (2007).

c) wherein the perpendicular magnetic field inductively generates a current in a matching secondary coil or coils within a mobile device placed close to and aligned with the base unit, to charge or power the mobile device;

Nakamura in view of *Odendaal* discloses/suggests this limitation. (Ex. 1002, ¶¶139-147; §§IX.A.1(a)-(b).)

As explained, *Nakamura*'s device 2/3 ("**mobile device**") contains secondary coil 12 (**purple**) ("**matching secondary coil or coils within a mobile device**"). (§§IX.A.1(a)-(b); Ex. 1005, FIGS. 1A-2B, 3, 5 (annotated below), 6, ¶¶0016-0022, 0062-0067, 0074-0092; Ex. 1002, ¶140.)

FIG. 3

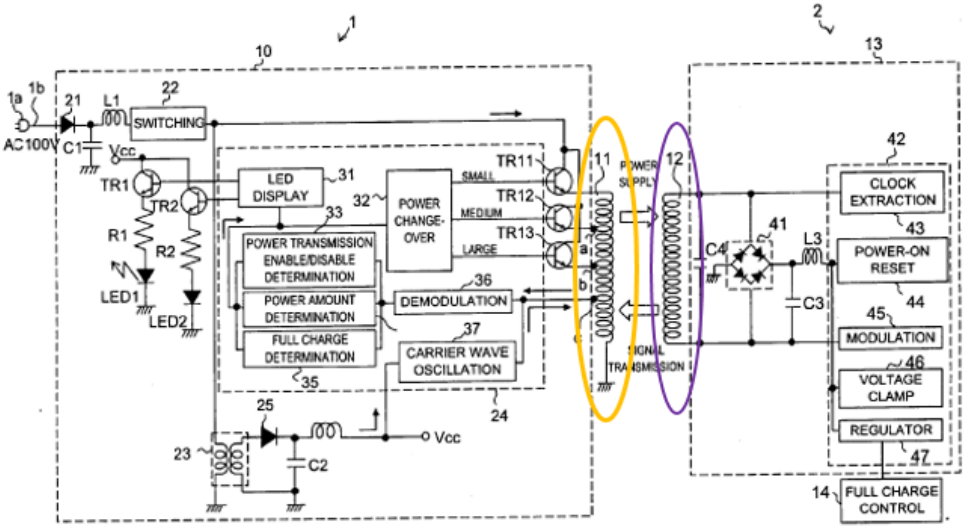

FIG. 5

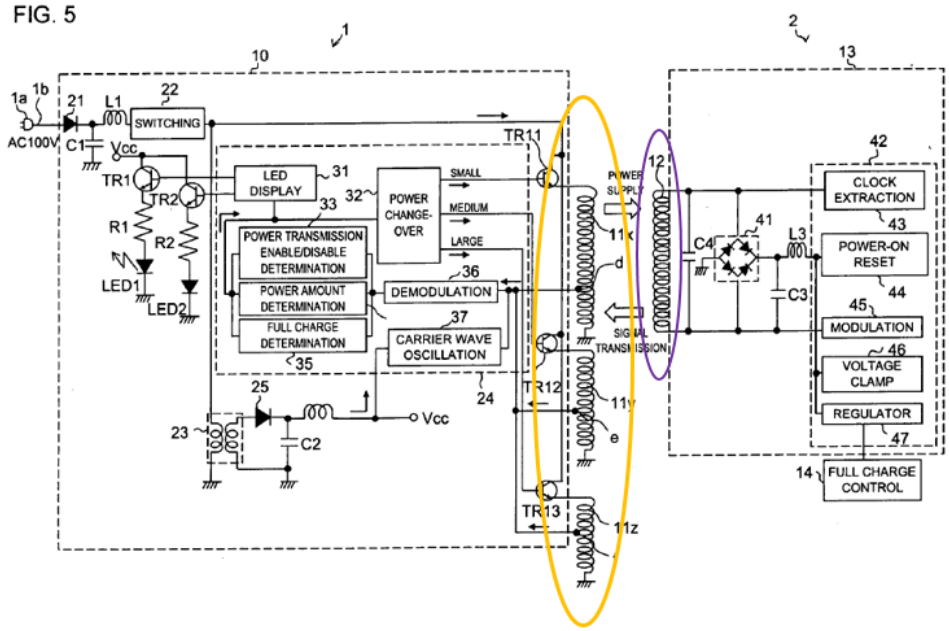

The "**perpendicular magnetic field**" generated by the primary coil(s) (11/11x/11y/11z) "**inductively generates a current**" in the secondary coil 12 when device 2/3 (and thus coil 12) is placed close to and aligned with apparatus 1 ("**base unit**"), "**to charge or power the mobile device**" 2/3. (§§IX.A.1(a)-(b);

§§IX.A.1(d)-(m); Ex. 1002, ¶141.) Coils 11 and 12 "constitute a transformer through magnetic coupling…wherein when the pulse voltage…is applied across the primary side coil 11, *a voltage is induced across the secondary side coil 12 by magnetic coupling*" that is used to charge/power device 2/3 and/or its battery. (Ex 1005, ¶0065, Abstract, ¶¶0018-0019, 0062-0064, 0074, 0082-0091, FIGS. 2A, 2B, 3-5; Ex. 1002, ¶141; §§IX.A.1(a)-(b).)

The power/voltage inductively transmitted between the primary and secondary coils involves a magnetic field (*e.g., Nakamura-Odendaal*'s above-discussed "**[substantially] perpendicular**" "**magnetic field**"). (*Supra*; §§IX.A.1(a)-(b); Ex 1005, ¶¶0018, 0062, 0065, 0077-0080, 0090-0091, FIGS. 3-5, Abstract, Claim 2; Ex. 1002, ¶142.) By receiving power/voltage via the magnetic coupling/field, a current is inductively generated in secondary coil 12 (by the perpendicular magnetic field), consistent with a POSITA's understanding. (*Id.*; Ex. 1005, ¶¶0065 (a voltage [and thus current] *induced across the secondary side coil 12* by magnetic coupling…"), 0076-0087, 0090-0091; Ex. 1002, ¶142; Ex. 1006, ¶¶0022 ("Current flows through the source coil and the resulting *magnetic flux induces an alternating current through the magnetic field and across the receiver coil*, completing an energy transfer circuit."), 0031; Ex. 1009, 2:62-3:8, 1:54-2:18, 3:20-4:11, FIGS. 1-3; Ex. 1010, FIGS. 1-5B, 8:55-9:52 ("as is *well known by those*

skilled in the relevant art, primary coil 510 *induces a current to flow in secondary coil* 230"), FIGS. 6A-10, 7:21-8:54, 9:53-10:22, 11:27-14:67; Ex. 1029, 3-4, 27-50.)

A POSITA would have also understood that the magnetic field induces such current in secondary coil 12 when device 2/3 ("**mobile device**") is "**placed close to and aligned with**" apparatus 1 ("**base unit**"), consistent with that known in the art. (Ex. 1002, ¶143; Ex. 1005, Abstract, ¶¶0018, 0062, 0065, 0079 (power transmission efficiencies where "a high coupling degree in magnetic coupling is established"), 0080-0082 ("highest coupling degree in magnetic coupling" occurs with 0 mm positional/alignment deviations), FIGS. 11A-11B, ¶¶0090-0091; *supra* citations to Exs. 1004, 1009-1011, 1029 in §IX.A.1(b); §§IX.A.1(a)-(b).)

Power is transferred only when device 2/3 (and its respective coil) is detected and placed close to and properly aligned with apparatus 1 (and its respective coils) so that sufficient "magnetic coupling is established." (Ex. 1005, ¶0079; *id.*, ¶¶0080-0083, 0086-0089, 0102-0103, 0118, 0156, Claims 19-20, 33, 37, FIGS. 4, 8-9, 11A-12, 17; §§IX.A.1(j)-(l).) Such features are also disclosed/suggested in the modified *Nakamura* system/device discussed above and below for this ground. (Ex. 1002, ¶¶144-147; §§IX.A.1(a)-(m).)

d) wherein one or both of the mobile device and a battery have a receiver and particular charging characteristics associated therewith,[5]

Nakamura in view of *Odendaal* discloses/suggests this limitation. (Ex. 1002, ¶¶148-161; §§IX.A.1(a)-(b).)

The '440 patent discusses a "receiver" in various non-limiting ways. (*E.g.*, Ex. 1001, FIGS. 2, 6-7, 9, 3:43-67, 4:15-18, 5:4-35, 7:8-26, 8:47-59, 10:22-39 ("a receiver for a mobile phone…can be a coil…"), 10:44-11:4, 11:5-6 ("receiver can also contain rectifier(s) and capacitor(s) to produce a cleaner DC voltage"), 11:34-44, 12:20-26, 12:48-49 ("the receiver (i.e., circuitry)"), 13:1-3 ("*regulator in the receiver* can then regulate the current and the load…"), 13:44-54, 13:55-14:7 ("receiver may be a component (such as a shell)…the receiver (shell)…"), 14:37-45.) *Nakamura* teachings are consistent with the plain language of the claim in context of the '440 patent. (Ex. 1002, ¶149.)

Nakamura discloses device 2/3 includes "**a receiver**" in different ways. *Nakamura*'s "**mobile device**" 2/3 contains components that are examples of the claimed "**receiver**." (§§IX.A.1(a)-(c); Ex. 1005, FIGS. 1A-2B, 3-6, ¶¶0016-0022, 0062-0067, 0074-0092; Ex. 1002, ¶150.) As exemplified in the non-limiting

[5] For purposes of this proceeding, Petitioner assumes the "charging characteristics" are associated with the "receiver," "mobile device," and/or "battery." (§VIII, n.3.)

annotated figures below, *Nakamura*'s mobile device 2/3 with its secondary coil 12 (**purple**) includes a "**receiver**" as, for example, **(1)** secondary side circuit 13 (with or without regulator 47)[6] (*e.g.*, shown left-red below without regulator 47), **(2)** circuit 13 (with or without regulator 47) collectively with charge control 14 (*e.g.*, shown middle-red below without regulator 47), or **(3)** other circuitry/components in circuit 13 (*e.g.*, one or more of capacitor C4, rectifier 41, inductor L3, and/or capacitor C3 (*e.g.*, shown right-red below)).[7] (*Id.*)

---

[6] The '440 patent describes embodiments where a "regulator" is "in the receiver" (Ex. 1001, 13:1-3), and thus the alternate *Nakamura* mappings herein that encompass a "**receiver**" with regulator 47 and those including regulator 47 for the claimed "**regulator**" (limitation 3(g)) and others are consistent with the '440 patent descriptions.

[7] The annotated figures here/below are exemplary visual aids not intended to define precise boundaries/schematics, or limit/constrain the prior art mappings/analysis (alone or as modified). Other components/circuitry, etc. not shown but included in device 2/3 as described/suggested by *Nakamura* (alone or as modified) would have been contemplated portions of such mappings. For example, *Nakamura*'s figures do not show a battery, but it is part of device 2/3. (§§IX.A.1(a)-(c).) Other figures in

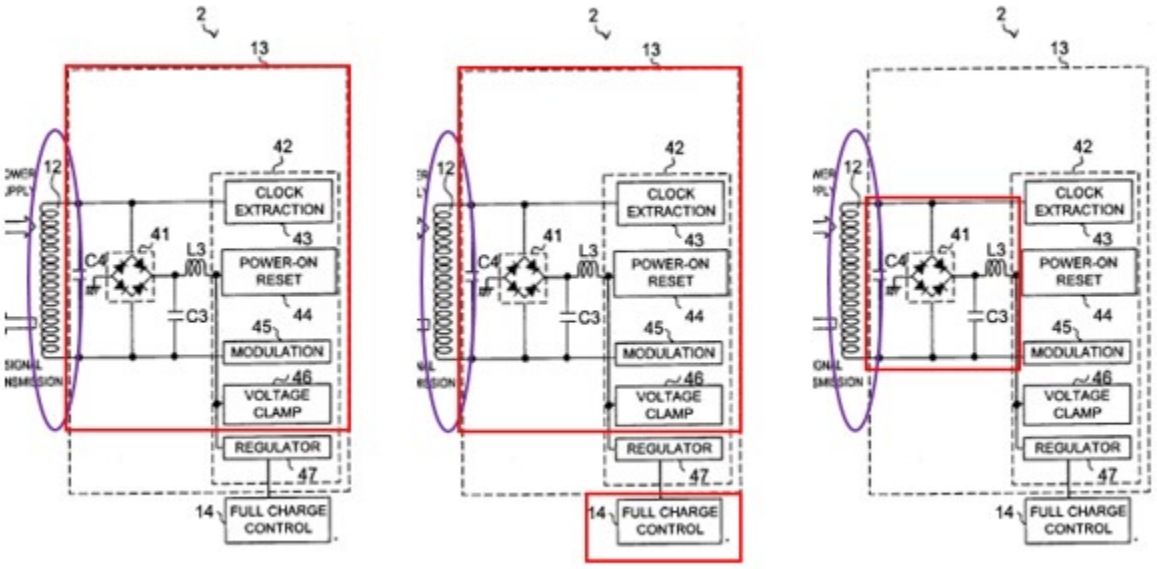

(Ex. 1005, FIG. 3 (annotated).)

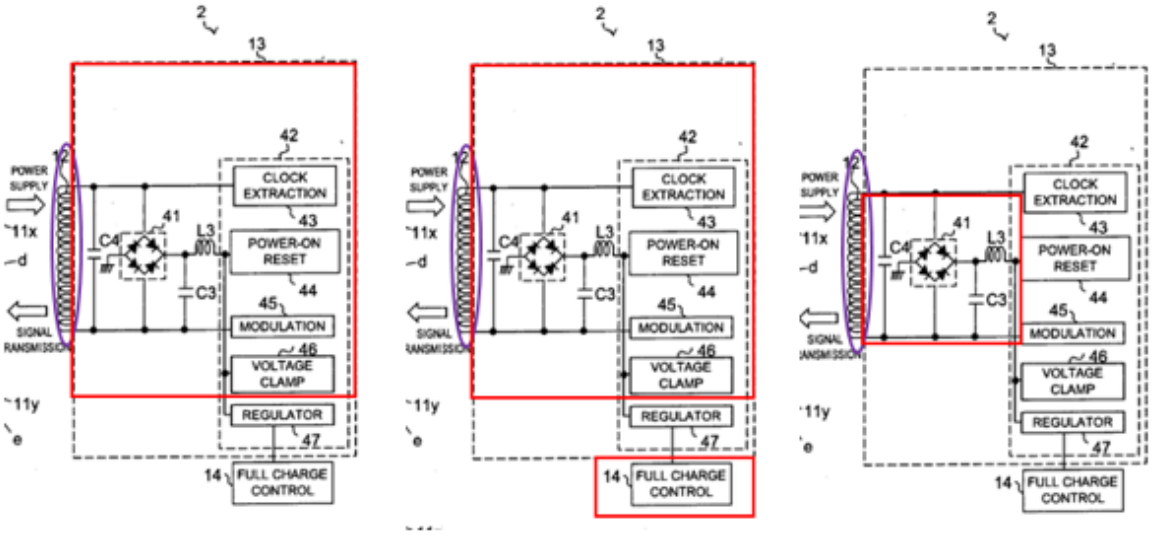

Nakamura are equally applicable with such mappings (*e.g.*, FIGS. 1A-6, 8-9, 13A-22). (§IX.A.1(a).)

(*Id.*, FIG. 5 (annotated).) (Ex. 1002, ¶151.)

Nakamura also discloses that device 2/3 and/or its battery (and thus necessarily the above-identified "**receiver**" in device 2/3, which (as discussed) is attached/coupled/connected to device 2/3's components including its battery, and is used for powering/charging device 2/3 or its battery) have "**particular charging characteristics associated therewith**." (Ex. 1002, ¶152; §§IX.A.1(a)-(c); *supra* n.5.) As explained for limitation 3(a), device 2/3 contains a battery, and since apparatus 1 is configured to determine/provide different power/voltage appropriate for the type of device 2/3 (and battery), a POSITA would have understood that device 2/3 and its battery (and thus the device's "receiver") have particular charging characteristics (*e.g.*, laptop 3 (and battery/receiver) has different power/charging characteristics than mobile phone 2 (and battery/receiver)). (*Id.*; Ex. 1005, Abstract, ¶¶0005-0008, 0016-0019, 0021, 0062-0065, 0074-0091, 0099, 0110, 0151, Claims 15, 29-30, 35, FIGS. 1A-5, 13A-13E; Ex. 1002, ¶¶153-160; §§IX.A.1(a)-(c); §IX.A.1(m).)

Nakamura's teachings are consistent with the '440 patent descriptions (Ex. 1001, 8:38-42. 8:66-9:9, 9:40-45, 10:7-12, 20:58-64) and a POSITA's knowledge that different devices (and their components, *e.g.*, receiver circuitry, battery, etc.) can have different charging characteristics (Ex. 1002, ¶¶158, 161; Ex. 1005, ¶¶0005-0015; Ex. 1006, ¶¶0033, 0037, 0040 ("different battery packs can have different

charging requirements"), 0044-0045, 0049). Also and further with PO's contentions, which point to power/voltage requirements of devices/batteries for the claimed "**charging characteristics**" (Ex. 1033, 11-21, 80-84 ("Maximum received power" (*id.*, 11-14, 80-81), "Nominal Voltage"/"Limited Charge Voltage" (*id.*, 17)).

e) an identification component associated with the mobile device or battery, which is configured to provide wireless identification of the receiver to the base unit,

Nakamura in view of *Odendaal* and *Calhoon* discloses/suggests this limitation. (Ex. 1002, ¶¶162-183; §§IX.A.1(a)-(d).) *Nakamura* discloses identifying a mobile device (including its "**receiver**" (§IX.A.1(d)) as "power reception equipment" that is capable of receiving power from apparatus 1 ("**base unit**") based on information communicated from the device that is used by apparatus 1 to determine/recognize whether the device is present and properly aligned/positioned for high degree of magnetic coupling for efficient power transfer. (§§IX.A.1(a)-(d); Ex. 1005, FIGS. 3-5, ¶¶0077-0082, 0078 ("power transmission enable/disable determination circuit 33 determines whether or not power reception equipment is placed on the power transmission apparatus 1, based on the '*code indicating being power reception equipment*'"), 0090-0091; Ex. 1002, ¶163.)

Nakamura also discloses applications where "equipment ID of the portable telephone 2" "recorded" (stored) in the portable telephone can be wirelessly provided (*e.g.*, to apparatus 1) and used to identify/verify/authenticate the

device/telephone 2 to facilitate mobile payment processes. (Ex. 1005, ¶0149, *id.* (personal information [equipment ID] "***are also*** accessed through a server 5…"), ¶¶0148-0150, 0151 (equipment ID of device 2 is recorded into computer of the railway company connected to server 5 after device 2 is "placed at a predetermined po[r]tion of the ticket dispenser in which…apparatus 1 is embedded" and a button is selected on the dispenser), FIGS. 21-22, 25-26, ¶¶0125-0141, 0147-0153; Ex. 1002, ¶164.) A POSITA would have understood such features to include the device providing the equipment ID information to facilitate the verification of payment processes. (*Id.*; Ex. 1002, ¶165.)

Thus, *Nakamura*'s device 2/3 contains mechanisms/component(s) that are configured to store and wirelessly provide identification of and/or information associated with the device (and thus its components, including its "receiver"-related circuitry and/or battery), such as ID information and/or *e.g.*, "codes" ("power reception equipment" code). (*Supra*; §§IX.A.1(a)-(d); §§IX.A.1(f)-(m); Ex. 1002, ¶166.) However, *Nakamura* does not expressly disclose "**an *identification component* associated with the mobile device or battery, which is configured to provide wireless *identification of the receiver to the base unit*.**" (*Id.*) Nonetheless, a POSITA would have found it obvious to configure the *Nakamura-Odendaal* system to implement such features in view of *Calhoon*. (Ex. 1002, ¶167.)

Calhoon discloses an inductive charging system that transfers energy by inductively coupling a source coil on a power source to a receiver/secondary coil for a battery charger/battery pack of a mobile device (power receiver), and other features relating to such a system (*e.g.*, detection/identification/verification/authentication of the power receiver). (Ex. 1006, Abstract, FIGS. 2-3 (below), ¶¶0002, 0008-0010, 0022-0027, 0029, 0045-0048, 0065; Ex. 1002, ¶¶78-86, 168.)

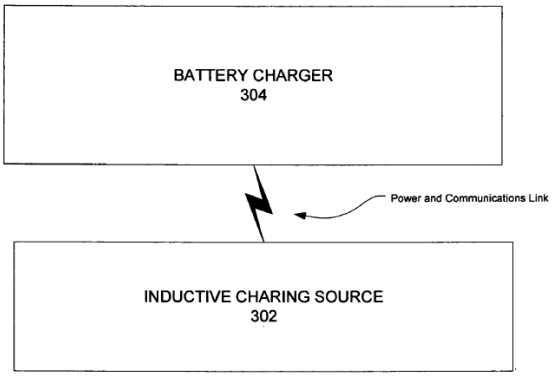

FIGURE 2

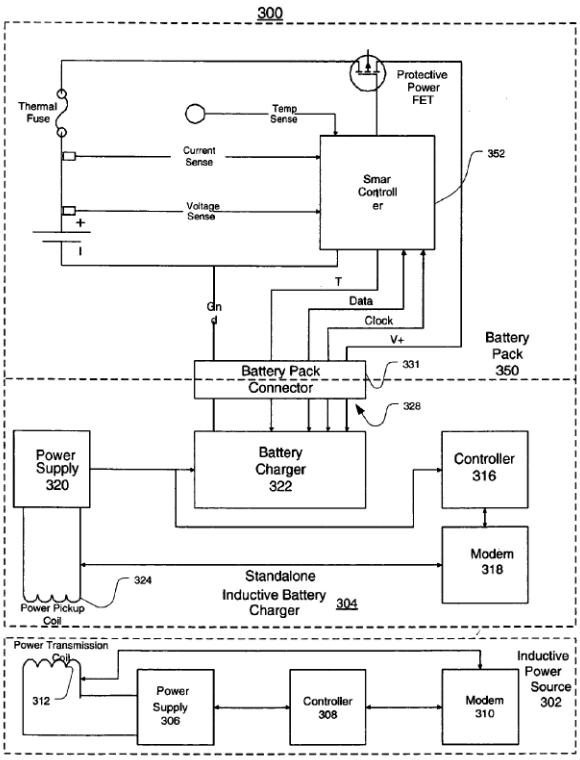

FIGURE 3

Calhoon describes obtaining and storing an ID/serial number (and other information, *e.g.*, security certificate, digital signature) of a power receiver (*e.g.*, battery charger assembly 304 or battery pack 350) and wirelessly communicating it to power/charging source 302 ("base unit" (like *Nakamura*'s) capable of powering/charging different mobile devices/batteries). (Ex. 1006, Abstract, ¶¶0022, 0033-0034, 0042-0049, 0050-0052, 0056, FIGS. 3-6; Ex. 1002, ¶169.) Controller 316 in battery charger 304 may include data, "such as a battery charger ID number, serial number, manufacturer's name and date of manufacture," which can be used "for novel power operations according to aspects of the present invention..." (Ex. 1006, ¶0042; *id.*, FIGS. 4-6, ¶¶0034, 0043-0048, 0049 ("battery pack ID of each

battery pack may be stored with the charging requirements"), 0050-0051, 0052 ("if [charger] 304 is authenticated in view of the [security] certification or [digital] signature, the source 302 supplies the requested voltage and power"), 0056.) Indeed:

> [T]he **source 302** may request information or charging parameters from the **battery charger assembly 304**, such as the required charging voltage and maximum power requirement.... **[I]nductive charging source 302** can request other information relevant to the **battery charger assembly 304**, such as a **battery charger identification (ID) number**, battery type chemistry of the battery pack, or **serial number of the battery charger** or the **serial number of the battery pack**. *This information can be used for* ***security, data integrity, or other purposes***.…**[B]attery charger assembly 304 transmits the requested information**.

(Ex. 1006, ¶0047; Ex. 1002, ¶170.)

A POSITA would have thus understood that *Calhoon*'s inductive power receiver includes an **identification component** that is associated with the mobile device/battery "**configured to provide wireless identification of the receiver** (*e.g.*, power receiver ID/serial number, etc.) **to [a] base unit**." (Ex. 1002, ¶¶171-172.) Indeed, components configured to store/obtain/transmit such information in power receiver (*e.g.*, assembly 304 component(s), such as one or more of modem 318, controller 316, nonvolatile storage, connector 328, etc.) function as an "**identification component**" given the information can be wirelessly transmitted

"for security, data integrity, or other purposes." (Ex. 1006, ¶0047; *id.*, FIGS. 3-5A, ¶¶0036-0037, 0040-0043.)

A POSITA would have had reasons to review/consider *Calhoon*'s above-discussed teachings given *Calhoon* is in the same field of endeavor as *Nakamura*/*Odendaal* (and '440 patent), and their teachings are compatible. *Nakamura*, *Odendaal*, and *Calhoon* all concern wireless/inductive powering/charging (by base unit) of a mobile/portable device. (*See* above citations to *Nakamura*/*Odendaal*/*Calhoon*; §§ IX.A.1(a)-(d); Ex. 1008, 1:5-3:5; Ex. 1006, ¶¶0022, 0029; Ex. 1002, ¶173.) *Nakamura* and *Calhoon* both describe transmitting information used by a base unit to control/manage power transfer to a mobile device (based on *e.g.*, power requirements/charging parameters, identification information, etc.). (*Supra*; §§IX.A.1(a)-(d); Ex. 1006, ¶¶0034, 0047-0048, 0050, FIGS. 3, 5A, 6; Ex. 1002, ¶173.) Moreover, like *Nakamura*, *Calhoon* discloses features reasonably pertinent to particular problems the '440 patent inventor was trying to solve (*e.g.*, a "need" for powering portable/mobile devices for use in different "applications" (Ex. 1001, 1:42-64, 1:35-3:67)). *Calhoon* and *Nakamura* contemplate commercial applications like that considered in the '440 patent. (*Id.*, 1:42-43; Ex. 1006, ¶¶0003-0010, 0050; Ex. 1005, ¶¶0110, 0147-0151.) Thus, *Calhoon* would have been consulted by the inventor and a POSITA, looking to address/solve similar

issues/problems and others relating to contactless/inductive charging systems. (Ex. 1002, ¶174.)

Thus, when contemplating designing/configuring/implementing a system like *Nakamura-Odendaal*, a POSITA would have consulted teachings/suggestions like that in *Calhoon* and (consequently) been motivated to modify the *Nakamura-Odendaal* system to include features like those discussed herein and recited in claim 3. (*Id.*)

A POSITA would have recognized the benefits of such identification features and thus been motivated to configure device 2/3 in *Nakamura-Odendaal* to include an identification component that performs similar features, such as provide wireless identification of the "**receiver**" (§IX.A.1(d)) to apparatus 1 ("**base unit**"), and store such identifier information in device 2/3 in a memory/storage device/component for such subsequent transmission. (Ex. 1002, ¶176.)

Given the similarities in *Nakamura* and *Calhoon*'s features (*e.g.*, inductively charging/powering different types of devices, modulation/wireless transmission of information/codes used to control power to identified/verified devices, etc.), a POSITA would have had reasons to configure/modify *Nakamura*'s device 2/3 with a component/circuitry/mechanism ("**identification component**") configured to wirelessly provide identifying information (*e.g.*, ID/serial number (or similar identifying information)) associated with the above-identified "**receiver**"

(§IX.A.1(d)) to apparatus 1 using the inductive transfer mechanisms described by *Nakamura*. (Ex. 1002, ¶176.) For example, a POSITA would have considered designs/implementations that modify/complement components in the above-modified *Nakamura* device 2/3 that are associated with obtaining/generating/transmitting information signals (*e.g.*, "power reception equipment" code) to apparatus 1 and/or those associated with maintaining/providing the equipment ID of the device (Ex. 1005, ¶¶0148-0151) with a component/mechanism that facilitates provision of such device/receiver identifying information to apparatus 1 for identification/verification/authentication, security, etc. purposes, consistent with *Nakamura* and *Calhoon*'s teachings. (Ex. 1002, ¶177.) A POSITA would have recognized that such a modification would have beneficially allowed apparatus 1 to identify/detect/verify/authenticate and otherwise ensure an authorized/recognized/authenticated and properly positioned/aligned mobile device is present to receive power at an appropriate level, consistent with the teachings/suggestions of *Nakamura* and *Calhoon*. (Ex. 1005, ¶¶0077-0078, FIGS. 3-5; Ex. 1006, Abstract, ¶¶0022, 0034, 0046-0048, 0050-0052, FIGS. 3, 5A, 6; Ex. 1002, ¶178.)

A POSITA would have found rationale/motivation for the above-modification (*e.g.*, authentication/identification/verification/confirmation features with an "identification component" in *Nakamura-Odendaal* system/device) given

Nakamura contemplates applications/configurations where inductive powering of (or communication with) a mobile device by a base unit occurs in public/commercial settings (*e.g.*, apparatus 1 embedded in a table/seat holder on a **train**, table in **shop**/**conference room**, public **locker**, or "**ticket dispenser**…**in the station**"). (Ex. 1005, ¶¶0108, 0110, 0113-0114, 0117, 150-151, FIGS. 13C-E, 15A-B, 17; Ex. 1002, ¶179.) A POSITA would have appreciated/understood that in such applications, identification/detection/authentication/verification/confirmation of mobile device 2/3 (and its receiver) would have been desirable. (*Id.*) A POSITA would have appreciated the benefits/advantages of the above-discussed implementation/modification, such as *e.g.*, for verifying/tracking power system use, deterring improper/misuse of power source equipment, improving security, virus protection, data integrity, and confirming authorized/verified devices is properly positioned so that a high degree of magnetic coupling can be established for power transfer, like that disclosed/suggested by *Nakamura* and *Calhoon*. (Ex. 1002, ¶180; Ex. 1006, ¶0050; Ex. 1005, ¶¶0066, 0074-89, 0099.)

A POSITA would have also recognized that *Nakamura-Odendaal*'s and *Calhoon*'s mobile devices (*e.g.*, including an inductive power receiver) have similar components/functionalities, which would have further motivated the above-modification. (Ex. 1002, ¶181; Ex. 1005, ¶¶0074 (power receiving control IC 42), 0077-0078 (modulation circuit 45 to modulate information for wireless transmission

to apparatus 1 for controlling power/charge operations); Ex. 1006, ¶¶0034 (modem 310, 318 adapted to modulate/demodulate signals for wirelessly receiving/transmitting data used to control powering/charging), 0042 (controller 316 for storing/transmitting/receiving information for power operations), 0047-0048, FIGS. 3-6.) The above teachings/suggestions would have guided a POSITA to consider/implement the above-discussed modification with a reasonable expectation of success that the resulting modified device would operate as intended and consistent with *Nakamura-Odendaal*'s operations/features. (Ex. 1002, ¶182.)

A POSITA would have had the skills/knowledge/rationale/capability to implement such a modification with a reasonable expectation of success given the above-teachings/suggestions in *Nakamura-Odendaal-Calhoon* and the state-of-art knowledge—especially where the modification would have involved applying known technologies (*e.g.*, using identifier information (*Nakamura*/*Calhoon*)) to verify/identify/authenticate/confirm device(s) (receiver/battery, etc.) receiving power inductively (*Nakamura*/*Calhoon*) according to known methods/techniques (*e.g.*, components/processes that use identifier/device information wirelessly transmitted/received to control power of a mobile device (*Nakamura*, *Calhoon*)) to yield a predictable power transfer/charging system that wirelessly identifies the device/receiver to monitor/detect/facilitate and/or ensure proper system use by

authorized/verified device. (Ex. 1002, ¶183; §§IX.A.1(a)-(d), IX.A.1(f)-(m).) *KSR Int'l Co.*, 550 at 416.

f) a means for avoiding overcharging one or both of the mobile device and battery inductively, and

(1) MPF Construction

Nakamura in view of *Odendaal* and *Calhoon* discloses/suggests this limitation under its plain meaning and **as MPF construed above**. (§VIII; Ex. 1002, ¶¶184-200.)[8]

Nakamura's mobile device includes regulator 47 that converts the DC voltage obtained via circuitry (*e.g.*, part of the "**receiver**" (§IX.A.1(d)) coupled to secondary coil 12 "to a predetermined voltage used for charging" that is "supplied to a charge control circuit 14" for "charg[ing] a battery."[9] (Ex. 1005, ¶¶0065, 0074-0075, FIGS.

[8] During prosecution, the applicant did not dispute that "claimed elements" such as "protection device" were known and support disclosure/obviousness of the claimed "means for avoiding overcharging." (Ex. 1004, 95-96, 110, 123-124; Ex. 1031, FIG. 5, ¶¶0007, 0045.)

[9] PO's infringement contentions allege the same "regulator" referenced for limitation 3(g) meets the claimed "means for avoiding overcharging" in limitation 3(f). (Ex. 1033, 56 (third form), 71, 123.) Under PO's interpretation, and without

3-5 (Full Charge Control 14); §IX.A.1(g); Ex. 1002, ¶185.) A POSITA would have understood *Nakamura*'s "full charge control" features encompass/suggest a circuit/component that enables the battery to achieve full charge, while not charging beyond full charge (not overcharging). (Ex. 1002, ¶186.) *Nakamura* discloses during power transfer operations, mobile device 2/3 communicates "full charge" information, which is used by the primary circuit 10 in apparatus 1 to stop charging/powering the battery/device. (Ex. 1005, ¶0066 ("necessary to cease power transmission" when device 2 is "fully charged"), 0077-0087, 0088 (TR11-13 are turned off to "cease power output" upon determining device 2 is fully charged based on the "information on full charge" communicated from "**device**" 2/3 to "**base unit**" 1), 0090-0091, 0096-0097, FIG. 4 (annotated below (*e.g.*, S18-S19)).)

---

conceding PO's contentions or that such mapping is appropriate, the "**regulator**" as mapped below for limitation 3(g) also discloses limitation 3(f) for similar reasons. (*Id.*; §IX.A.1(g).) Petitioner reserves the right to dispute such infringement contentions/positions in the Texas Litigation.

FIG. 4

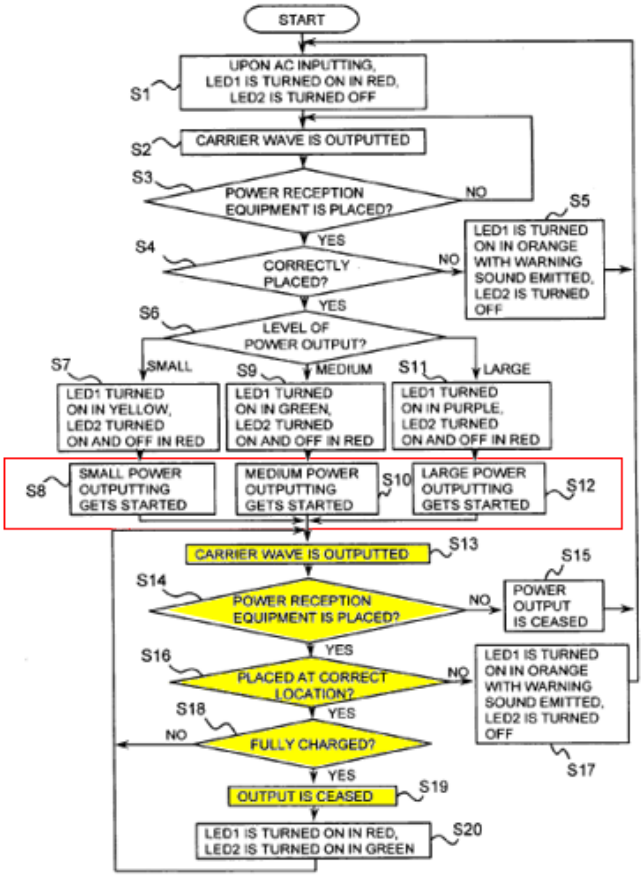

Nakamura also discloses other ways to prevent overcharging—*e.g.*, full-charge determination circuit 35 determines "whether…the [device] 2 has been fully charged based on the change in the current flowing in the primary side coil 11 detected by…circuit 38" and "[i]f [so]…transistors [TR11-13] are all turned off to enable power transmission to be ceased." (*Id.*, ¶¶0096, 0100-0101.) Such features disclose the claimed "**means for avoiding overcharging**" (under its plain meaning and as interpreted in §VIII) in the claimed "**system**" discussed above. (§§IX.A.1(a)-(e); Ex. 1002, ¶187.)

Although *Nakamura* includes features to avoid overcharging the mobile device/battery, which involve apparatus 1 components that rely on information transmitted by device 2/3, to the extent *Nakamura* is found not to disclose this feature or this limitation is interpreted such that *the mobile device must include* the claimed "**means for avoiding overcharging**" (under its plain meaning and as interpreted in §VIII)—which *Nakamura* does not expressly disclose, it would have been obvious to a POSITA to implement such features in view of *Calhoon* and POSITA's state-of-art knowledge. (Ex. 1002, ¶188.)

A POSITA would have known that continuing to charge a fully charged battery may damage or detrimentally affect the battery and/or related components. (Ex. 1002, ¶189; Ex. 1019, 8:67-9:7 (temperature rise of a battery during recharging can dramatically reduce reliability and service life of the battery), 9:11-18, 9:38-53 (preventing overcharging "***even if the 'stop' command was not received*** by the transmitter 12 due to electromagnetic interference"), 6:15-20, 7:60-67, 8:56-9:18, 14:1-6; Ex. 1031, FIG. 5, ¶¶0007, 0045; Ex. 1042, 1:59-67.) Thus, a POSITA would have known that it was advantageous to address overcharging issues with respect to portable devices/batteries and configure a system/device to have multiple ways to stop charging a battery when it is full (in case one fails). (*Id.*; Ex. 1002, ¶190.)

Thus, a POSITA would have been motivated to consider/implement other/additional ways/mechanisms to supplement/complement *Nakamura*'s above-

discussed full-charge/overcharge-prevention features (including those encompassed within device 2/3) in order to prevent/avoid overcharging in case *Nakamura*'s existing full-charge functionalities reliant on apparatus 1 do not/cannot function properly (*e.g.*, because of current detection/measurement issues, disruption in carrier wave and/or information/modulation signal transmission/generation or reception/processing)). (Ex. 1002, ¶191.) *Calhoon* (§IX.A.1(e)) discloses/suggests such features.

Calhoon teaches mechanism in mobile device (power receiver with battery) for avoiding overcharging of the battery:

> thermistor or "T" line between the charger 322 of battery charger assembly 304 and the battery pack 350 can be used as a ***safety control to disrupt charging in the event the battery pack 350 experiences an overcharge*** or over-temperature condition.

(Ex. 1006, ¶0038, FIG. 3.) *Calhoon* also discloses:

> when the battery charger assembly 304 begins to receive its requested voltage and power, the ***controller 316 may turn on the battery charger 322 in order to charge the battery pack 350***. In process block 520, ***if the battery is charged to the desired level, the battery charger 322 can be switched off-line***.…In process block 522, if the battery 314 is not at the desired level of charge, then the charging process is continued.

(*Id*., ¶0048, ¶0044 ("controller 316…may be configured to read…other functions, alarms, and signals from the battery pack 350" such as "**battery pack voltage, relative state of charge, absolute state of charge, remaining capacity, full charge capacity, alarm warning, average time to full**…"), FIG. 5A.) (Ex. 1002, ¶192.) A POSITA would have thus understood that controller 316 and/or battery charger 322 in *Calhoon*'s power receiver controls/regulates battery charging such that charging is disrupted/stopped when the battery is charged to a desired level (*e.g.*, full) or experiences an overcharge (*e.g.*, because it is full), thus preventing overcharging (or further overcharging). (Ex. 1002, ¶192.)

Calhoon thus discloses/suggests a mechanism that encompasses the corresponding structures or equivalents thereof (and claimed function) for the claimed "**means for avoiding overcharging**…" term. (§VIII.) For instance, the controller 316 and/or battery charger 322 (including its stored program(s) or in ASIC-based form) discloses or is equivalent to a "*battery regulator chip and/or a circuit that measures parameters of a battery (e.g., voltage, degree of charging, temperature, etc.) and uses an internal program to regulate the power drawn from a circuit to ensure overcharging does not occur*." (*Id.*; Ex. 1002, ¶¶193-195; Ex. 1006, ¶¶0038, 0040, FIG. 4, 0043 ("controller 316 may have computer-readable media 415, which provides nonvolatile storage of computer-readable instructions,

data structures, program modules and other data relevant for charging operations"), 0044, 0048, 0066 ("the aspects may be implement via…(ASICs)").)

In light of *Calhoon*'s above-discussed teachings/suggestions in context of *Nakamura*'s disclosures and POSITA's state-of-art knowledge, a POSITA would have been motivated to further modify mobile device 2/3 in *Nakamura-Odendaal-Calhoon* (§§IX.A.1(a)-(e)) to include a battery regulator chip and/or a circuit that measures battery parameters (*e.g.*, voltage, degree of charging, temperature, etc.) and uses an internal program to regulate the power drawn from a circuit to prevent overcharging. (Ex. 1002, ¶196.)[10]

A POSITA would have been motivated, and found obvious, to implement such a modification to enhance/supplement/complement/improve *Nakamura*'s full-charge features in order to avoid overcharging even where such features (relevant components/processes) fail to prevent overcharging. (Ex. 1002, ¶197; Ex. 1019, 9:11-18, 9:38-53.) Such a modification would have been beneficial where the signals are not/cannot be sent/received or appropriately converted/processed, which would prevent generation/transmission/processing of the "full charge" information/signals used by apparatus 1 to stop power/charge operations (*supra*; Ex.

[10] A POSITA had reasons to consider *Calhoon*'s teachings in context of *Nakamura-Odendaal* as discussed in §IX.A.1(e).

1005, ¶¶0086-0088;), or where there are component/other issues that preclude/hinder such full-charge operations. (Ex. 1002, ¶197.)

A POSITA would have understood that *Nakamura-Odendaal*'s and *Calhoon*'s systems have similar approaches/processes regarding wireless/inductive charging and overcharge prevention (*supra*) and have similar/compatible components for providing such features (*e.g.*, *Calhoon*'s controller 316 and *Nakamura*'s power receiving control IC 42 (which contains regulator 47), full charge control circuit 14) (§ IX.A.1(e); Ex. 1005, ¶0065; Ex. 1006, ¶¶0038, 0048, FIG. 3), and thus would have been guided/motivated to include an "**means for avoiding overcharging**" in mobile device 2/3, with a reasonable expectation of success that the resulting/modified device would operate properly and as intended. (Ex. 1002, ¶198.)

A POSITA would have had the skills/knowledge/rationale/capability to implement such a modification with a reasonable expectation of success given the above-teachings/suggestions in *Nakamura-Odendaal-Calhoon* and the state-of-art knowledge—especially where the modification would have involved applying known technologies (*e.g.*, overcharge protection mechanisms (*Calhoon*/*Nakamura*/state-of-art knowledge (*e.g.*, Ex. 1019, 8:56-9:53; Ex. 1031, ¶¶0007, 0045)) to provide enhanced prevention of device/battery overcharging (*id.*) according to known methods (*e.g.*, measuring/processing parameters, values,

signals, information and/or program instructions to determine full-charge status and preventing further charging (*Nakamura*/*Calhoon*)) to yield a predictable inductive power transfer/charging system that mitigates against damage caused by overcharging. (Ex. 1002, ¶¶199-200.) *KSR Int'l Co.*, 550 at 416.

(2) PO's Four Forms (Texas Litigation)

Nakamura alone and/or in combination with *Odendaal* and *Calhoon* discloses/suggests limitation 3(f) under **PO's Texas Litigation Four Forms of interpretation for the claimed "means for avoiding overcharging…."** (§VIII; Ex. 1033, 56, 123; Ex. 1002, ¶¶201-214.)

(a) First and Second Forms

Nakamura's above-discussed components and related processes that use codes/information signals generated/transmitted by device 2/3 and used by apparatus 1 to stop/adjust/control power transfer to device 2/3 meet PO's ***First and Second Forms***. (Ex. 1002, ¶¶202-206; §§IX.A.1(a)-(f)(1).)

Nakamura's mobile device uses modulation circuit 45 (part of power receiving control IC 42) and other relevant components/circuitry to transmit "information on full charge" that indicates "a state of full charge" to apparatus 1, which apparatus 1 uses to cease power output/transfer. (Ex. 1005, FIGS. 3-5, ¶¶0070, 0078-0078, 0086-0088, 0090-0091; §§IX.A.1(a)-(f)(1).) Thus, device 2/3 (*e.g.*, cellphone, laptop) contains integrated chip component and/or circuit (*e.g.*, IC

42, secondary side circuit 13), which contains modulation circuit 45 and other components/circuitry that sends the full-charge information that functions equivalent to an end of power message since it signals apparatus 1 to cease power transfer to device 2/3, thereby avoiding/preventing overcharging. (Ex. 1002, ¶¶202-204.) Such features disclose or are equivalent to PO's alleged ***First Form*** that "satisf[ies] this claim element." (Ex. 1033, 56, 123 (First Form: "send an 'end power transfer' message to the wireless charger base station unit, signaling to the base unit to stop inductive charging and preventing overcharging following the WPC Standard Protocol").)

Nakamura similarly discloses and/or suggests the ***Second Form***. (Ex. 1002, ¶205.) As explained, the same operations include generating/sending by device 2/3 "information on consumed power" (power requirements) of the mobile device/receiver/battery to apparatus 1, which is used by components of apparatus 1 to determine power of device 2/3 (*e.g.*, large/medium/small) and adjust power/voltage/current transmitted (inductively) to device 2/3, in a closed-loop fashion. (§§IX.A.1(a)-(f)(1); Ex. 1005, Abstract, FIGS. 3-5, ¶¶0017-0019, 0078, 0083-0085, 0090-0091, 0099; Ex. 1002, ¶206.) Such features disclose or are equivalent to PO's alleged ***Second Form*** that "satisf[ies] this claim element" as "a further form of overcharge protection." (Ex. 1033, 56, 123 (Second Form: "communicate voltage/current/power requirements to the charger for regulation by

the charger, which the charger then uses for closed-loop control of the voltage/current/power delivered to the product").)

(b) Third and Fourth Forms

As to the ***Third Form***, PO points to a **regulator** as an example of the claimed "means for avoiding overcharging…" "[b]ecause the regulator limits the voltage, current, or power delivered, thereby reducing the charge delivered, and is configured to provide this regulated, limited power to the battery and can also be shut down if needed." (Ex. 1033, 56, 123.) As explained above and for limitation 3(g), *Nakamura* discloses regulator 47 in device 2/3 that converts the DC voltage obtained via circuitry (*e.g.*, part of the "**receiver**" (§IX.A.1(d)) coupled to secondary coil 12 "to a predetermined voltage used for charging" that is "supplied to a charge control circuit 14" for "charg[ing] a battery."[11] (Ex. 1005, ¶¶0065, 0074-0075, FIGS. 3-5; §IX.A.1(g); Ex. 1002, ¶¶207-208.) A POSITA would have understood that in accordance with *Nakamura*'s above-discussed power control features (*supra*; §§IX.A.1(a)-(f)(1); Ex. 1005, ¶¶0086-0088 (full charge), ¶¶0079-0082 (positional deviation)), regulator 47 "can also be shut down if needed" since if no power is being transferred (upon full charge or excessive positional deviation), regulator 47 would not be regulating such power and thus is effectively shut down. (Ex. 1002, ¶208.)

[11] *See supra* n.11.

Thus, *Nakamura* discloses structure/feature that meets or is equivalent to PO's ***Third Form*** and the claimed function. (*Id.*; §VIII.)

The above-discussed *Nakamura-Odendaal-Calhoon* combination also discloses and/or suggests limitation 3(f) under PO's ***Third and Fourth Forms***. (§IX.A.1(f)(1); Ex. 1002, ¶¶209-214.) That section explains how/why it would have been obvious to modify the *Nakamura-Odendaal-Calhoon* system/device to include a mechanism that avoids overcharging the mobile device/battery inductively (*e.g.*, mechanism similar to controller 316 and/or battery charger 322 in *Calhoon*'s inductive power receiver that act as a "regulator" to control/regulate charging of a battery such that when the battery is charged to a desired level (*e.g.*, full or near full), charging is stopped to prevent overcharging). Such a mechanism/feature in the modified *Nakamura-Odendaal-Calhoon* system/device would likewise operate like a "regulator" to "limit[] the voltage, current, or power delivered, thereby reducing the charge delivered" and would have been "configured to provide this regulated, limited power to the battery" and "can also be shut down if needed" as identified in PO's Third Form. (Ex. 1002, ¶209-214)

Accordingly, *Nakamura* alone and/or the *Nakamura-Odendaal-Calhoon* system/device discloses and/or suggests structure/feature that meets or is equivalent to PO's ***Third Form*** and the claimed function. (*Supra*; §IX.A.1(e)(1); Ex. 1002, ¶210; §VIII.)

The *Nakamura-Odendaal-Calhoon* system/device discloses and/or suggests structure/feature that meets or is equivalent to PO's ***Fourth Form*** for reasons similar to those discussed above for the ***Third Form***. (Ex. 1002, ¶¶211-212; §§IX.A.1(f)(1); *supra*.) As explained, *Nakamura*'s mobile device includes power receiving side control IC 42 and full charge control circuit 14. IC 42 (which is "in the shape of an IC chip") performs power receiving control of circuit 13, and prevents circuits from voltage breakdown, and regulator 47 converts obtained DC voltage to supply it to charge control circuit 14 for charging device 2/3's battery. (Ex. 1005, ¶¶0065, 0074-0075, FIGS. 3, 5; Ex. 1002, ¶213.)

A POSITA would have understood that power receiving side control IC 42 (or IC 42 and full charge control circuit 14) disclose and/or suggest (or are equivalent to) a "**Battery Charger or Power Management (PMIC) ICs that charge the battery**…" (Ex. 1033, 56, 123 (Fourth Form)). Power control IC 42 (also referred to as "**power adjusting** section") includes components such as voltage clamp circuit 46 and regulator 47 that manage power/voltage that is received (inductively) from apparatus 1, and/or manage/control/regulate power/voltage used to charge a battery. (Ex. 1002, ¶213.) The above-discussed *Nakamura-Odendaal-Calhoon* system/device would have included such features, along with a mechanism (including integrated circuitry) that would have prevented/avoided the device's battery from overcharging (*see* §IX.A.1(f)(1)). Accordingly, the *Nakamura-*

Odendaal-Calhoon system/device discloses and/or suggests structure/feature that meets or is equivalent to PO's ***Fourth Form*** and the claimed function. (*Supra*; §IX.A.1(e)(1); Ex. 1002, ¶214; §VIII)

g) a regulator, coupled to the output of the receiver or to the battery, that regulates an output voltage or output current provided by the receiver, to the mobile device or battery, to be within a range of parameters for the mobile device or the battery;

Nakamura (as modified above) discloses/suggests this limitation. (Ex. 1002, ¶¶215-228; §§IX.A.1(a)-(f).) Regulator 47 alone, or collectively with charge control circuit 14 (in device 2/3), is an example of a "**regulator**" that is "**coupled to the output of the receiver or to the battery, that regulates an output voltage or output current provided by the receiver, to the mobile device or battery**" as claimed.[12] (Ex. 1002, ¶217.) As explained, *Nakamura*'s mobile device 2/3 includes power receiving side control IC (power adjusting section) 42 with regulator 47 "that performs power receiving control of the secondary side circuit 13." (Ex. 1005, ¶0074, FIGS. 3, 5.) "[T]he regulator 47 converts the DC voltage obtained by the conversion [*e.g.*, of a carrier wave] to a predetermined voltage used for charging and supplies the predetermined voltage to the charge control circuit 14" (*id.*, ¶0075), and

[12] *See supra* n.11.

"the charge control circuit 14 charges a battery with the supplied DC voltage" (*id.*, ¶0065). (Ex. 1002, ¶216.)

The DC voltage is provided by circuitry that is part of the above-identified "receiver" examples (§IX.A.1(d)). Thus, output voltage/current provided by such a "receiver" is regulated via regulator 47 or regulator 47 and charge control circuit 14—each of which is an example of the claimed "**regulator**." (Ex. 1002, ¶217.)

Regulator 47 is "**coupled to the output of the receiver**" discussed for limitation 3(d). (§IX.A.1(d).) As shown below,[13] such a "**regulator**" (green) is coupled to each of the exemplary identified "**receiver**(s)": (1) secondary side circuit 13 (with or without regulator 47)[14] (*e.g.*, shown left-red below without including regulator 47), (2) circuit 13 (with or without regulator 47) collectively with charge control 14 (*e.g.*, middle-red below without including regulator 47), or (3) other circuitry/components in circuit 13 (*e.g.*, one or more of capacitor C4, rectifier 41, inductor L3, and/or capacitor C3 (*e.g.*, right-red below)). Similarly, regulator 47 is also "**coupled to…the battery**" (§IX.A.1(d)), which while not shown in figures, is in "**mobile device**" 2/3 and receives the regulated voltage/current for charging via

[13] *See supra* n.9.

[14] *See supra* n.8.

charge control 14. (§§IX.A.1(a)-(f); Ex. 1005, ¶¶0062-0063, 0065, 0074-0075, 0110, Claims 15, 29-30, 35; Ex. 1002, ¶218.)

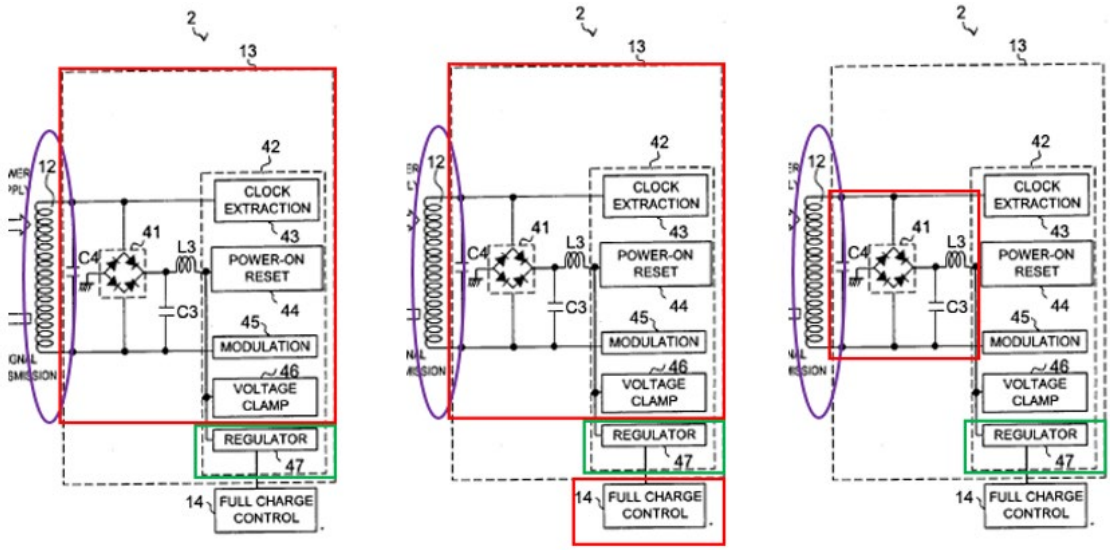

(Ex. 1005, FIG. 3 (annotated).)

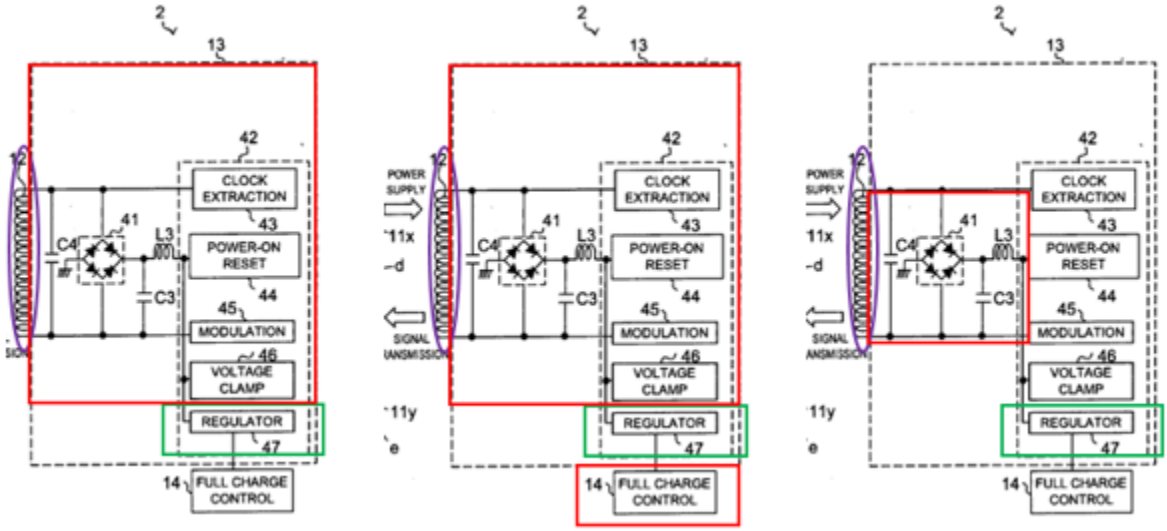

(*Id.*, FIG. 5 (annotated).)

Similarly, *Nakamura*'s regulator 47 collectively with charge control circuit 14 also discloses the claimed "**regulator**" (green) coupled to the "**battery**" or the

"**receiver**" (with or without regulator 47, *e.g.*, shown red below without including regulator 47). (Ex. 1002, ¶220.)

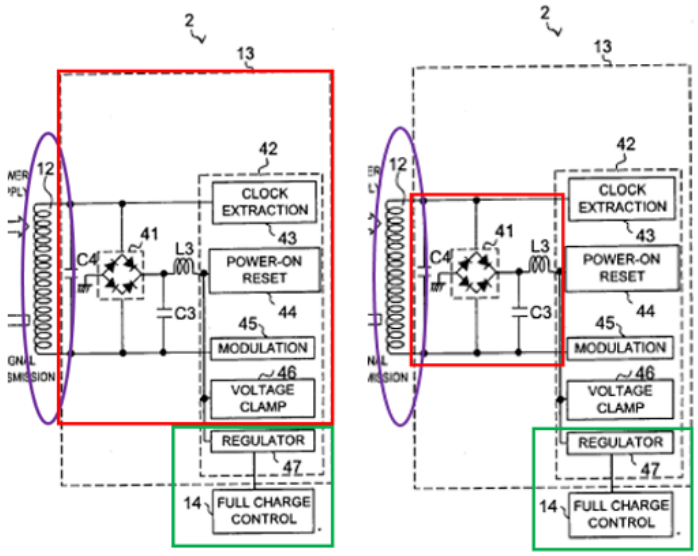

(Ex. 1005, FIG. 3 (annotated).)

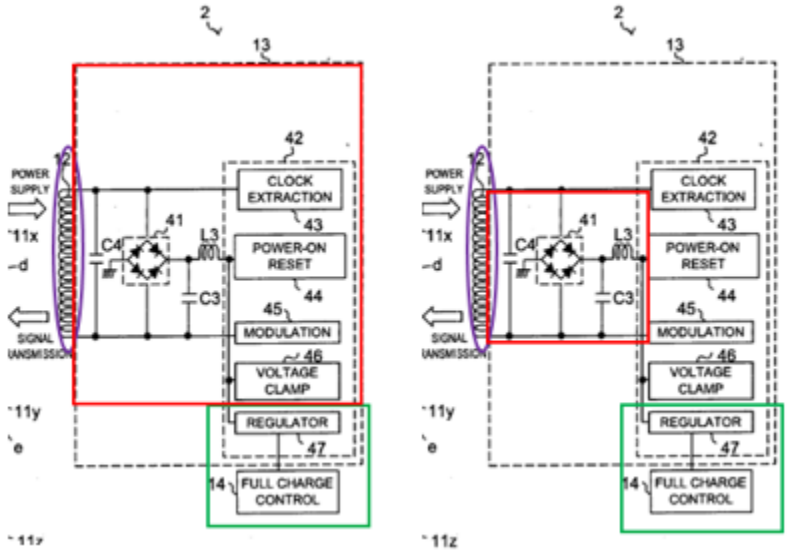

(*Id.*, FIG. 5 (annotated).)

Further, the above-identified "**regulator**" regulates the output voltage/current provided by the above-identified "**receiver**" "**to be within a range of parameters**

for the mobile device or the battery" as claimed. (Ex. 1002, ¶221.) As explained, *Nakamura* discloses "regulator 47 convert[ing] the DC voltage obtained by the [carrier wave] conversion to a ***predetermined voltage*** used for charging" a battery. (*Supra*; Ex. 1005, ¶¶0065, 0074-0075, FIGS. 3-5.) A POSITA would have understood that "a predetermined voltage" is an acceptable voltage for the battery given *Nakamura* describes providing appropriate power/voltage to device 2/3 for charging the battery based on power requirements (*id.*; §§IX.A.1(a)-(f); Ex. 1005, Abstract, ¶¶0017-0019, 0063, 0066, 0085-0088, 0091, Ex. 1002, ¶221), and thus that such predetermined voltage is necessarily within a range of parameters for the device/battery since *Nakamura*'s system would not operate as intended if the regulated power (voltage and/or current) from the "receiver" was outside of proper operational range.[15] (Ex. 1002, ¶221.)

Moreover, to the extent that *Nakamura* (as modified above) does not disclose this claimed feature, a POSITA would have been motivated, and found obvious, to configure the *Nakamura-Odendaal-Calhoon* system with such features in view of

[15] The '440 patent does not provide any disclosure/details of a regulator that regulates output voltage/current "to be within a range of parameters for the mobile device or the battery" as claimed. (*See generally* Ex. 1001.)

the teachings/suggestions of *Nakamura* and *Calhoon* and state-of-art knowledge. (Ex. 1002, ¶222.)

As explained, *Nakamura* discloses adjusting the power/voltage/current level (*e.g.*, small/medium/large) used to power/charge a particular device 2/3 and/or its battery based on power requirements of the device/battery. (*Supra*; §§IX.A.1(a)-(d), (f); Ex. 1002, ¶223.) A POSITA would have understood/appreciated that circuits/systems/components in power transfer/control/regulation, etc. applications experience fluctuations in signal levels/values during operations, and thus that components/circuits, etc. were typically designed/manufactured/implemented with tolerances that permitted operations within a range of values/parameters. (Ex. 1002, ¶223.) A POSITA would have applied/implemented the same common design concepts (or used conforming components) in the circuits/components/configurations in *Nakamura*'s system/device (including as modified above). (*Id*.)

Thus, a POSITA would have configured the above-modified *Nakamura* system/device so the "regulator" regulates the power/voltage/current provided to the battery of device 2/3 according to the adjusted power level transmitted by apparatus 1 to be within a range of acceptable/appropriate values/parameters for the device/battery, to promote proper and flexible operations and resulting benefits/advantages (*e.g.*, not limiting such voltage/current to a narrow/single value,

thus allowing for normal (known/predictable) fluctuations in the voltage/current regulated to the battery, and thus not limiting the functionality of the charging system). (*Id.*, ¶224.) Such knowledge/motivation, along with *Calhoon*'s teachings/suggestions, would have motivated a POSITA to implement such a modification/configuration in the above-discussed *Nakamura-Odendaal-Calhoon* system. (*Id.*, ¶225.)

Calhoon discloses the mobile device/receiver includes battery charger assembly 304 that is "enabled to determine the power requirements or other data of a battery pack 350" based on "[r]equirements data…obtained from the smart controller 352 of battery pack 350," such as "values for the charging current and the charging voltage." (Ex. 1006, ¶0044, FIG. 5A.) "The requirements data…may be stored in…controller 316 for use during charging operations or for later transmission to the inductive power source 302." (*Id.*) "[V]alues can be obtained from the battery pack 350 for battery pack voltage, relative state of charge, absolute state of charge, remaining capacity, full charge capacity, alarm warning, average time to full, battery chemistry." (*Id.*) "[C]ontroller 316…may determine or otherwise access the ***battery pack 350 charging requirements and charge parameters***..." (*id.*, ¶0049), and can be informed "as to a wide range of information about the [battery], e.g., current, voltage, power requirements, and rated capacity" (*id.*, ¶0037). (Ex. 1002, ¶226.)

Such teachings/suggestions (with *Nakamura*'s dislcosures and state-of-art knowledge) would have guided a POSITA to consider/configure/implement the above-discussed modification with a reasonable expectation of success that the resulting modified device would operate as intended, consistent with *Nakamura*'s operations/features. (Ex. 1002, ¶227.)

A POSITA would have had the skills/knowledge/rationale/capability to implement such a modification, especially where it would have involved applying known technologies (*e.g.*, regulator circuitry) according to known/conventional methods/techniques/concepts (*e.g.*, regulating voltage/current within an acceptable range of values/parameters) to yield a predictable inductive charging system that provides appropriate/regulated power/voltage/current to the mobile device/battery. *KSR Int'l Co.*, 550 at 416. (Ex. 1002, ¶228; §§IX.A.1(a)-(f).)

h) wherein different mobile devices and batteries can have different charging characteristics associated therewith; and

Nakamura in view of *Odendaal* and *Calhoon* discloses/suggests this limitation for reasons discussed above (*e.g.*, limitations 3(a)/3(d))—*e.g.*, different devices 2/3 (*e.g.*, cellphones/laptops) with different batteries have different charging characteristics. (Ex. 1002, ¶¶229-230; §§IX.A.1(a), (d); *see also* §§IX.A.1(a)-(m).) As explained, *Nakamura*'s configurations adjust charging power to accommodate the power requirements of different devices/batteries (*Id.*; Ex. 1005, FIGS. 3-5,

¶¶0016-0019, 0021, 0063, 0099), and *Calhoon* confirms a POSITA's understanding that different devices/batteries have different charging characteristics (Ex. 1006, ¶¶0033, 0037, 0040 ("different battery packs can have different charging requirements"), 0045 ("…different power requirements"), 0049.)

i) wherein the receiver communicates with the base unit to

Nakamura in view of *Odendaal* and *Calhoon* discloses/suggests this limitation for the reasons above/below. (Ex. 1002, ¶¶231-234; §§IX.A.1(a)-(h).)

As explained, the above-identified "**receiver**" (§§IX.A.1(d)/(g)) in device 2/3 communicates information with apparatus 1 ("**base unit**") (§§IX.A.1(a)-(f); Ex. 1005, Abstract, ¶¶0066, 0070, 0075 (IC 42 components perform "signal processing" for signals transmitted through coils 11 and 12); Ex. 1002, ¶232)—*e.g.*, the carrier wave transmitted from apparatus 1 is received by "**secondary coil**" 12 and above-identified "**receiver**" (§IX.A.1(d)) (Ex. 1005, ¶¶0076-0077) so that codes/information regarding device 2/3 (*e.g.*, "power reception equipment," "consumed power," "full charge" code/information) is modulated and transmitted back to apparatus 1[16] (*id.*, ¶¶0077-0078 ("…The modulated wave supplied to the secondary side coil 12 from the modulation circuit 45…is transmitted to the primary

[16] As discussed, the "**receiver**" in *Nakamura-Odendaal-Calhoon* also communicates identifier information with apparatus 1. (§§IX.A.1(d)-(e); Ex. 1002, ¶¶148-183.)

side coil 11…The demodulation circuit 36…receives and demodulates the transmitted modulated wave…”)), which is used to control powering/charging operations (*id.*, ¶¶0078-0090, 0091 (“…level of power to be transmitted ***determined from the signal containing the ‘information on consumed power’ received from the portable telephone 2***”), FIGS. 3-5). (Ex. 1002, ¶¶233-234; §§IX.A.1(a)-(m).)

j) detect, identify and authenticate the receiver with the base unit, as provided by the identification component,

Nakamura in view of *Odendaal* and *Calhoon* discloses/suggests this limitation. (Ex. 1002, ¶¶235-242; §§IX.A.1(a)-(i).) For the reasons above/below, the “**receiver**” in the *Nakamura-Odendaal-Calhoon* system/device would have been configured to communicate with apparatus 1 to “**detect, identify and authenticate the receiver with the base unit**,” as provided by the “**identification component**” as discussed in limitations 3(d)-(e). (§§IX.A.1(d)-(e).)

As explained, the *Nakamura-Odendaal-Calhoon* system/device would have included an “**identification component**” configured to provide “**receiver**” detection/identification/authentication information (*e.g.*, “power reception equipment” code, ID/serial number, security certificate, digital signature, etc.) to apparatus 1 so that apparatus 1 can detect/identify/verify/authenticate the mobile device/receiver/battery and ensure an identified/authorized/verified/authenticated and properly detected/positioned/aligned mobile device/receiver is provided

appropriate power ("**detect, verify, and authenticate the receiver with the base unit**"). (§IX.A.1(e); Ex. 1002, ¶¶236-237; Ex. 1005, ¶¶0077-0078, FIGS. 3-5; Ex. 1006, Abstract, ¶¶0022, 0034, 0042, 0046-0048, 0050-0052, FIGS. 3-6.)

As discussed in §IX.A.1(e), such configuration/modification/implementation would have beneficially enhanced/expanded the way the system provides power/charge to mobile devices/batteries—*e.g.*, deterring improper/misuse of the equipment, improving security, virus protection, data integrity, etc. (*Id.*, Ex. 1002, ¶238; §§IX.A.1(e), IX.A.1(i); §§IX.A.1(k)-(m); Ex. 1006, Abstract (authentication of devices that are allowed…to be powered or otherwise charged"), ¶¶0022, 0034, 0046-0048, 0050-0052; Ex. 1005, ¶0066, 0074-89, 0099.)

A POSITA would have had similar motivation/rationale/skills and expectation of success in configuring/implementing the *Nakamura-Odendaal-Calhoon* system/device with such features (of limitation 3(j)) as those explained above (§§IX.A.1(e)-(i)). (Ex. 1002, ¶239.) A POSITA would have been further motivated in light of *Calhoon*'s above-discussed teachings/suggestions—*e.g.*, transmitting identifying/authenticating information such as security certificate, digital signature, etc. that is used by the base unit to authenticate the receiver/device/battery before power is transmitted (*e.g.*, to protect devices/system). (§§IX.A.1(e); Ex. 1006, ¶¶0042, 0052 ("inductive charging source 302 may request for a security certificate or digital signature from the battery charger assembly 304

to authenticate it" and if authenticated, "source 302 supplies the requested voltage and power"); Ex. 1002, ¶239.) As discussed, a POSITA would have appreciated/understood that the above-modification/implementation would have ensured that device 2/3 would work properly with apparatus 1 for charging the device/battery, which would mitigate/prevent issues, *e.g.*, damage cause by virus or overheating (*id.*; Ex. 1005, ¶¶0066, 0099; Ex. 1006, ¶¶0006-0007, 0022, 0050, 0065), and thus would have been motivated and found obvious to implement the above-modification to *Nakamura-Odendaal-Calhoon*'s system/device/receiver (*e.g.*, to improve efficiency/safety/security of the system (*e.g.*, protect base units and host objects, *e.g.*, tables, ticker dispensers, etc.)). (*Supra*; §IX.A.1(e); Ex. 1002, ¶¶240-242.) *KSR Int'l Co.*, 550 at 416.

k) determine and then activate one or more primary coils of the base unit which are aligned with the receiver coil,[17]

Nakamura in view of *Odendaal* and *Calhoon* discloses/suggests this limitation. (Ex. 1002, ¶¶243-249; §§IX.A.1(a)-(j).)

As explained, *Nakamura* discloses that the information signals communicated from device 2/3 to apparatus 1 includes code/information that is used to detect/verify

[17] For purposes of this proceeding, Petitioner assumes "receiver coil" refers to the claimed "secondary coil." (§VIII, n.3.)

presence and determine and activate one or more primary coils that is properly aligned with secondary coil 12. (§§IX.A.1(a)-(j); Ex. 1002, ¶¶243-244.) *Nakamura* discloses configurations where apparatus 1 uses switching circuits associated with one of a plurality primary coils 11x-11z (orange) to power/charge device 2/3. (§§IX.A.1(a)-(f); Ex. 1005, FIG. 5 (annotated below), FIGS. 1A-4, ¶¶0062-0065, 0069-0076, 0077-0079, 0083-0091.)

FIG. 5

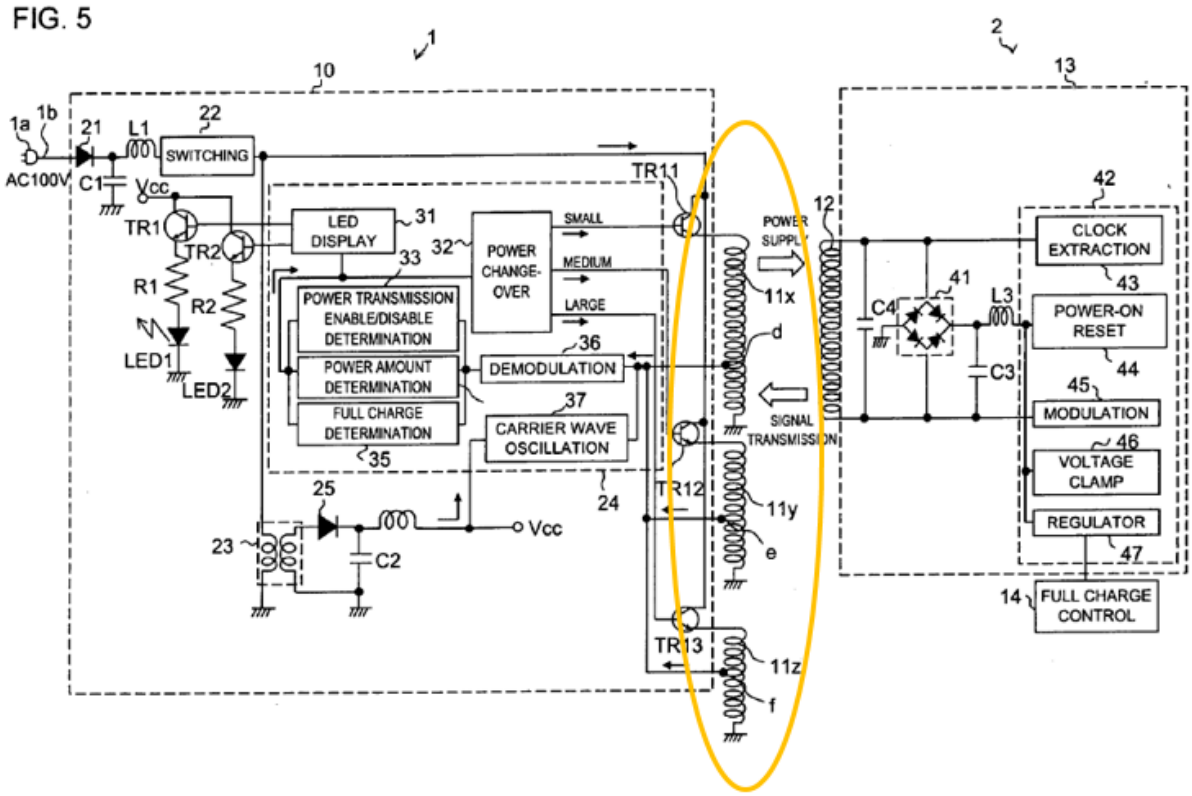

For example, determination circuit 34 (in apparatus 1) uses "information on consumed power" to determine whether small/medium/large power is to be provided by apparatus 1, and selectively switches one of the associated transistors TR11-13 to allow current to pass through the appropriate primary coil 11x-11z that generates

a magnetic field to facilitate power transfer via the magnetic coupling between an activated primary coil 11x-11z and secondary coil 12. (§§IX.A.1(a)-1(j); Ex. 1002, ¶245; Ex. 1005, FIGS. 1-5, ¶¶0077-0078, 0083-0085, 0090-0091.) As discussed, similar features are provided with FIG. 3 (multi-tap primary coil). (*Id*.)

Nakamura also discloses the information signal communicated from device 2/3 to apparatus 1 includes "code"/information that is used to detect/verify presence and proper alignment of secondary coil 12 with primary coil(s) 11. As explained for limitations 3(b)-(c), power to device 2/3 is provided via the primary and secondary coils when it is determined mobile device 2/3 ("**mobile device**") and its secondary/receiver coil 12 ("**receiver coil**"-"**secondary coil**") are present and properly positioned/aligned with apparatus 1 ("**base unit**") and its primary coils ("**primary coils**") such that a high degree of magnetic coupling is established. (Ex. 1005, ¶¶0062-0063, 0065, 0078-0082, 0087-0088, 0090-0091, 0096, 0109; §§IX.A.1(a)-(i); Ex. 1002, ¶246.)

For example, determination circuit 33 "determines whether or not power reception equipment is placed on the power transmission apparatus 1, based on the '**code indicating being power reception equipment**' (step S3)" received from device 2/3. (Ex. 1005, ¶0078; ¶0063 ("recognizing" device 2/3 "placed on…apparatus 1" so as to transmit appropriate power).) If the code is received, "it is determined that power reception equipment is placed on the power transmission

apparatus 1 and it is *determined whether or not the power reception equipment is correctly placed on the power transmission apparatus 1* (step S4)." (*Id.*) If not, "the carrier wave is outputted again (Step S2)." (*Id.*) (*Id.*, ¶¶0077, 0079 ("…whether or not the power reception equipment is correctly placed on the power transmission apparatus 1, the meaning of this phrase is *whether or not the coil of the power receiving side and the coil of the power transmission side are arranged at positions where a high power transmission efficiency in a non-contact power supply system is obtained*" or a "*high coupling degree in magnetic coupling is established*"), 0080-0081, 0082 ("[I]t is determined ***whether or not the positional deviation*** of the portable telephone 2 from the power transmission apparatus 1 ***exceeds a predetermined value (step S4). If it exceeds, no power transmission is performed.***"), 0083, 0096, 0109, FIGS. 11A-11B, 13A-13E.) (§§IX.A.1(a)-(c), §IX.A.1(i); Ex. 1002, ¶247.)

Such features would have been implemented in *Nakamura-Odendaal-Calhoon* discussed above. (§§IX.A.1(a)-(j).) Accordingly, for reasons above and below, the "receiver" in device 2/3 of *Nakamura-Odendaal-Calhoon* would likewise have been configured to communicate with apparatus 1 ("**base unit**") to "**determine and then activate one or more primary coils** (*e.g.*, coils 11x-11z) **of the base unit which are aligned with the receiver coil** (coil 12)." (*Id.*; Ex. 1002, ¶¶247-249; *supra*; §§IX.A.1(a)-(j); Ex. 1005, FIGS. 3, 4 (annotated below)(S4 ("No"), S5, S1-

S3), ¶¶0076-0082, 0086 (ceasing power transmission when device is removed), 0090-0091; §§IX.A.1(l)-(m).)

FIG. 4

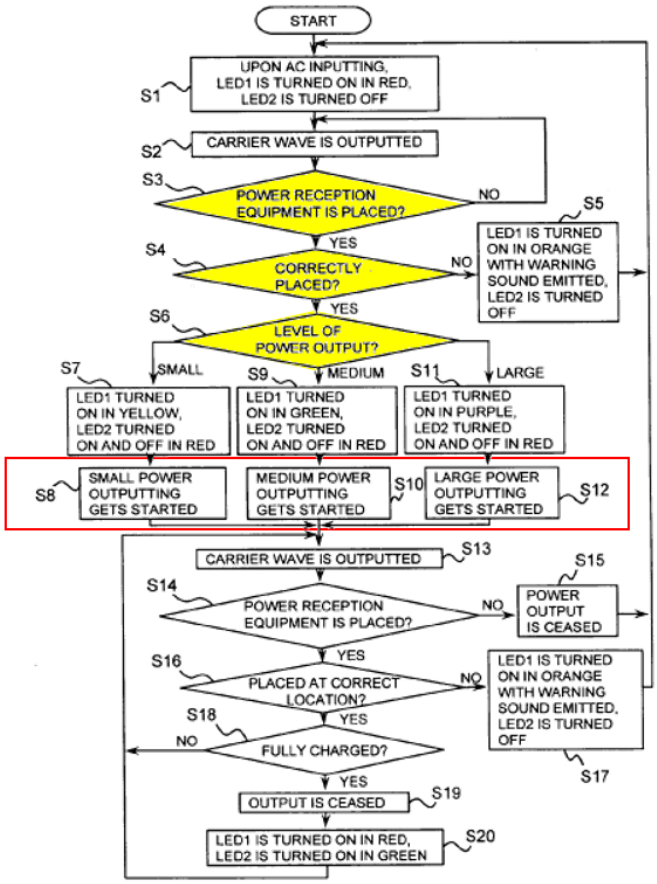

l) verify the continued presence of the receiver near the base unit, and

Nakamura in view of *Odendaal* and *Calhoon* discloses/suggests this limitation. (Ex. 1002, ¶¶250-253; §§IX.A.1(a)-(k).) As explained, *Nakamura* discloses that the presence/alignment of device 2/3 (and thus its "receiver" and coil) with apparatus 1 ("**base unit**") (and an activated primary coil) is continuously checked/verified during power/charge operations using the

code/information/modulated signals communicated to apparatus 1. (§§IX.A.1(a)-(f), IX.A.1(i)-(k); Ex. 1005, FIGS. 3-5, ¶¶0076-0083, 0086-0091, 0096, 0109; Ex. 1002, ¶251.) *Nakamura* explains, "***[e]ven after the power transmission is started**...**it is checked whether or not [device 2/3]**...**has been removed*** from on…apparatus 1 according to ["*code indicating being power reception equipment*"] transmitted back against the carrier wave (step S14)." (Ex. 1005, ¶0086.) If the "code…" is not received, "it is determined that [device 2/3] has been removed from…apparatus 1" and power transmission stops. (*Id.*; *id.*, ¶¶0087-0088, ¶¶0078-0083, FIG. 4; Ex. 1002, ¶251.)

A POSITA would have understood that step S14 (*see* FIG. 4 (annotated below)), which (alone, or with S16) relates to **verification of the presence/alignment** of device 2/3 (and its receiver) near apparatus 1, along with other steps (S13/S16/S18), forms a loop within the FIG. 4 process, and thus **continues continuously** (*e.g.*, until the device/receiver is removed, fully charged, etc.). (*Id.*; Ex. 1002, ¶¶251-253.)

FIG. 4

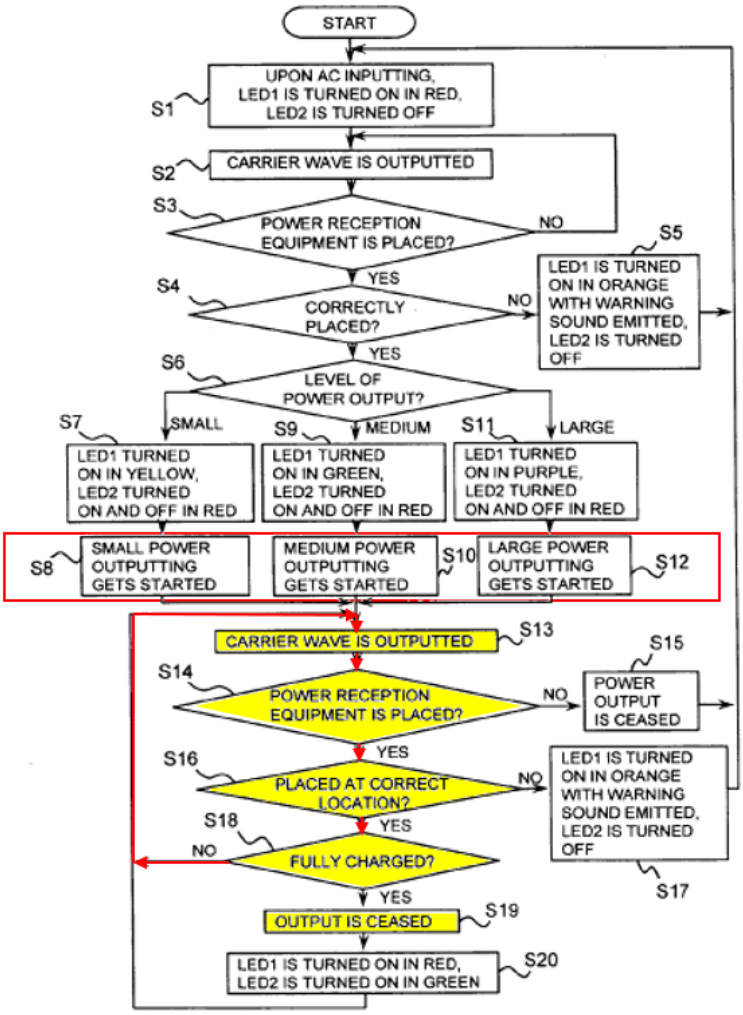
START
UPON AC INPUTTING, LED1 IS TURNED ON IN RED, LED2 IS TURNED OFF
S1
CARRIER WAVE IS OUTPUTTED
S2
S3
POWER RECEPTION EQUIPMENT IS PLACED?
NO
YES
S5
LED1 IS TURNED ON IN ORANGE WITH WARNING SOUND EMITTED, LED2 IS TURNED OFF
S4
CORRECTLY PLACED?
NO
YES
S6
LEVEL OF POWER OUTPUT?
S7
SMALL
S9
MEDIUM
S11
LARGE
LED1 TURNED ON IN YELLOW, LED2 TURNED ON AND OFF IN RED
LED1 TURNED ON IN GREEN, LED2 TURNED ON AND OFF IN RED
LED1 TURNED ON IN PURPLE, LED2 TURNED ON AND OFF IN RED
S8
SMALL POWER OUTPUTTING GETS STARTED
MEDIUM POWER OUTPUTTING GETS STARTED
S10
LARGE POWER OUTPUTTING GETS STARTED
S12
CARRIER WAVE IS OUTPUTTED
S13
S15
S14
POWER RECEPTION EQUIPMENT IS PLACED?
NO
POWER OUTPUT IS CEASED
YES
S16
PLACED AT CORRECT LOCATION?
NO
LED1 IS TURNED ON IN ORANGE WITH WARNING SOUND EMITTED, LED2 IS TURNED OFF
S17
S18
YES
NO
FULLY CHARGED?
YES
OUTPUT IS CEASED
S19
LED1 IS TURNED ON IN RED, LED2 IS TURNED ON IN GREEN
S20

m) communicate information describing the characteristics[18] of the mobile device or the battery, for use by the base unit to provide power transfer to the receiver and to the mobile device and the battery according to their particular charging characteristics.

Nakamura in view of *Odendaal* and *Calhoon* discloses/suggests this limitation for the reasons discussed above. (Ex. 1002, ¶¶254-256; §§IX.A.1(a)-(l).) As explained, *Nakamura*'s (*Nakamura-Odendaal-Calhoon*'s) configurations are configured to adjust the charging power level to accommodate different mobile devices (*e.g.*, cellphones, laptops) with different batteries having different charging characteristics. (§§IX.A.1(a)-(b), IX.A.1(d)-(i); Ex. 1005, FIGS. 3-5, ¶¶0016-0019, 0021, 0063, 0077-0078, 0083-0085, 0090-0091, 0099; Ex. 1006, ¶¶0033, 0037, 0040, 0044, 0049; Ex. 1002, ¶255; §§IX.A.1(a)-(l).)

[18] For purposes of this proceeding, Petitioner assumes "the characteristics" to be "charging characteristics." (§VIII, n.3.)

FIG. 4

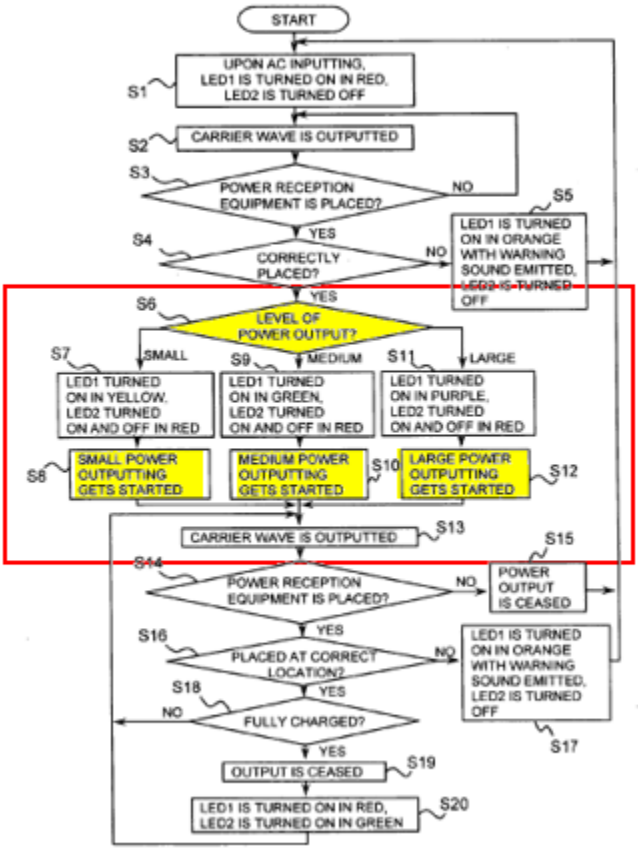

(Ex. 1005, FIG. 4 (annotated).) For reasons explained, the *Nakamura-Odendaal-Calhoon* device/system would have been configured to include such features to ensure the appropriate level of power is provided to a properly positioned/aligned/detected/verified/authenticated device 2/3 and receiver, consistent with operations/configurations contemplated by *Nakamura-Calhoon-Odendaal*. (§§IX.A.1(a)-(l); Ex. 1002, ¶256.) A POSITA would have had the same motivation, skills, knowledge in the art, and expectation of success as those

explained above for the modifications involving *Calhoon* and *Odendaal*, in configuring the above features that meet limitation 3(m). (*Id.*)

2. Claim 13

a) The system of claim 3, further comprising a data storage component for storage of data, for subsequent transmission of data to or from the mobile device.

Nakamura-Odendaal-Calhoon discloses/suggests this limitation. (Ex. 1002, ¶¶257-279; §§IX.A.1(a)-(m).) Device 2/3 (of *Nakamura-Odendaal-Calhoon*) generates/obtains and communicates/transmits codes/information to apparatus 1 (*e.g.*, "code[s]"/information used to facilitate/control *Nakamura*'s power transfer operations, *e.g.*, detecting/verifying presence/alignment of device 2/3, selectively transferring the appropriate level of power/voltage, ceasing power transfer upon full-charge, etc.). (Ex. 1002, ¶258; §§IX.A.1(a)-(m); Ex. 1005, ¶¶0076-0091, FIGS. 3-5, 21-25, ¶¶0129-0155.) Device(s) 2/3 can be cellphones/laptops/PDAs, etc. known to necessarily include data storage/memory components for data to be received/transmitted by/from the device, consistent with that known in the art. (*Id.*; Ex. 1005, ¶¶0003, 0062-0063, 0102-0103, FIGS. 1A-9, 13A-19; Ex. 1009, 1:63-2:15, 3:9-19, 3:39-49, FIGS. 1-3; Ex. 1006, ¶¶0058-0060, FIG. 1; Ex. 1019, Abstract, 7:32-46, FIG. 1; §§IX.A.1(a)-(m); Ex. 1005, ¶¶0074-0075 (device 2/3's power receiving control IC 42 "is in the shape of an IC chip," which a POSITA understood to include storage components); Ex. 1002, ¶¶259-260.)

Thus, a POSITA would have understood device 2/3 necessarily includes a data storage/memory component that stores the code/information signals ("**data**") that is "**for subsequent transmission…from the mobile device**" to facilitate/control *Nakamura*'s above-discussed power transfer operations, because such processes/operations would not have worked without storing (even temporarily) such code/information. (*Id.*; Ex. 1005, ¶¶0075, 0077-0089, FIG. 4; Ex. 1002, ¶261.)

Even if such claimed features were not necessarily disclosed/present *Nakamura-Odendaal-Calhoon* discloses/suggests such claimed features for the reasons above (*e.g.*, for limitations 3(e)/3(j)). (§§IX.A.1(e), 1(j); §§IX.A.1(a)-(m); Ex. 1002, ¶¶262-267.) *Nakamura* discloses "**equipment ID of the portable telephone 2**" ("**data**") is "***recorded***" (stored) in the telephone/device 2 (in its "**data storage component**") and subsequently used (transmitted/transferred from telephone/device 2 to apparatus 1 embedded in a ticket dispenser) to identify/verify/authenticate the device to facilitate mobile payment processes (while also performing "rapid charging of [device] 2" inductively via apparatus 1). (*Id.*; Ex. 1005, ¶¶0148-0151, FIGS. 21-22, 25-26, ¶¶0125-0141, 0147-0153; Ex. 1002, ¶¶264-265.) A POSITA would have understood such storage and transfer features (along with the above-discussed storage/transmission of "code" information) were applicable to *Nakamura*'s above-discussed power transfer operations, and thus

would have been included in the *Nakamura-Odendaal-Calhoon* system/device for the reasons discussed above and for claim 3. (*Supra*; §§IX.A.1(a)-(m); Ex. 1002, ¶¶262-267.)

Alternatively, even if not disclosed, a POSITA would have been motivated to configure the *Nakamura-Odendaal-Calhoon* system/device to include the claimed "**data storage**…" features for similar discussed reasons. (§§IX.A.1(e), 1(j); §§IX.A.1(a)-(m); Ex. 1002, ¶268.) The analysis for limitations 3(e)/3(j) explains how/why device 2/3 (in *Nakamura-Odendaal-Calhoon*) would have been configured (in view of *Calhoon*) to include an identification component and performed features that provided/transmitted wireless identification/verification/authentication of the "**receiver**" (and device 2/3 and/or battery) to apparatus 1 and stored relevant identification/verification/authentication information (*e.g.*, ID/serial numbers, security certificates, digital signatures, etc.) in device 2/3 (*e.g.*, in component(s) similar to *Calhoon*'s computer readable storage 415 of controller 316 ("**data storage component**")) for such subsequent transmission. (*Id.*; Ex. 1006, Abstract, ¶¶0022, 0034, 0036-0038, 0040-0052, 0056, 0065-0066, FIGS. 2-6; Ex. 1002, ¶269.)

Moreover, *Calhoon* teaches storing "information or charging parameters" of a mobile device (*e.g.*, battery/receiver/charger assembly) in the mobile device and subsequently transmitting them to a base unit to be used for inductively transmitting

appropriate power/voltage to the device. (*Id.*; Ex. 1006, ¶¶0036-0037, 0042-0044, 0047-0049, FIGS. 2-6; Ex. 1002, ¶¶270-272.) A POSITA would have understood that such teachings are similar to and compatible with *Nakamura*'s above-discussed disclosures regarding transmitting code/information "on consumed power" to adjust power/voltage to be transmitted. (*Id.*; *supra*; §§IX.A.1(a)-(m); Ex. 1002, ¶¶273-276.)

Thus, a POSITA would have been motivated and found obvious, in light of *Calhoon*, to configure the *Nakamura-Odendaal-Calhoon* device 2/3 to include a data storage component for storage of identification/verification/authentication information or other information for inductive power transfers, for subsequent transmission of such data/information from device 2/3, for purposes/benefits, *e.g.*, enhanced safety, "security, data integrity, or other purposes" (Ex. 1006, ¶0047), identification/verification/authentication, or ensuring proper inductive power transmission. (*Supra*; citations to *Calhoon* above; §§IX.A.1(a)-(m); Ex. 1002, ¶¶277-278.)

Thus, for similar reasons, it would have been obvious to a POSITA, in light of the teachings/suggestions of *Calhoon*, to configure the *Nakamura-Odendaal-Calhoon* system such that device 2/3 includes a data storage component for storage of ID data, for subsequent transmission of ID data from the mobile device 2/3 to apparatus 1 to ensure the information (data) was accessible for subsequent use for

e.g., security/verification/authentication purposes. (Ex. 1002, ¶¶277-278; §§IX.A.1(e), IX.A.1(i)-(m).) A POSITA would have had the same motivation/skills/knowledge and expectation of success as those explained above (claim 3) for the modifications involving *Nakamura*/*Calhoon*/*Odendaal*, in configuring the above-discussed features that meet claim 13, since implementing such features would have been a predictable/straightforward implementation involving known technologies according to known methods (*e.g.*, using storage/memory device/component to store data eventually transmitted for use). (*Id.*; Ex. 1002, ¶279.) *KSR Int'l Co.*, 550 at 416.

X. DISCRETIONARY DENIAL IS NOT APPROPRIATE

Discretionary denial under §325(d) is not appropriate here given the prior art combinations and arguments raised during prosecution are not the same or substantially similar to the grounds presented herein. For instance, the Office did not consider the disclosures of *Nakamura* (which was not considered during examination) in light of the teachings of *Odendaal*, and/or *Calhoon*. (*See generally* Ex. 1004; Ex. 1001, Cover.) *Nakamura* discloses, *inter alia*, a universal base unit for charging different devices/batteries having different charging characteristics just like the limitations added to the claims prior to allowance and *Odendaal* discloses well-known use of planar coils. (Ex. 1004, 53, 86-96; §IX.A.1.) Moreover, while other references by "Calhoon" submitted during prosecution (Ex. 1001, Cover, 2-3) have similar disclosures to *Calhoon* asserted here (Ex. 1006), *Calhoon* (Ex. 1006) was not identified or applied by the examiner. Nor were any disclosures of the other Calhoon reference substantively applied/relied upon by the examiner. (*See* citations to Ex. 1004 in §VII.) Indeed, the applicant never substantively disputed the examiner's explanations/rationale concerning any of the prior art relied upon to reject features/limitations that *Calhoon* is used for in this petition. (*See, e.g.*, §IX.A.1(e); Ex. 1004, 171-173, 180-182, 265-275.) Nonetheless, the Office/examiner thus erred in ultimately allowing the now challenged claims without considering any overlapping teachings/suggestions in the Calhoon-submitted

references and those in *Calhoon* (Ex. 1006) (§IX) as they disclose/suggest features relevant to the patentability of the challenged claim(s), especially in context of *Nakamura*, which was never considered by the Office. (§§IX.A.1(d)-(m).)

Further, the *Fintiv* factors do not justify denying institution. *Apple Inc. v. Fintiv, Inc.*, IPR2020-00019, Paper 11 (P.T.A.B. Mar. 20, 2020) (precedential).

The **first factor** (stay) is neutral, because Samsung has not yet moved for a stay. *See Hulu LLC v. SITO Mobile R&D IP, LLC*, IPR2021-00298, Paper 11 at 10-11 (P.T.A.B. May 19, 2021).

The **second factor** (proximity) is neutral. "The PTAB will weigh this factor against exercising discretion to deny institution under *Fintiv* if the median time-to-trial is around the same time or after the projected statutory deadline for the PTAB's final written decision" (FWD). (Ex. 1034, 9.) The median time from filing to trial in the Eastern District of Texas is 19 months, meaning trial will be *no earlier* than May 2024 (Ex. 1035, 35), and is close to the court's scheduled jury selection for August 5, 2024 (Ex. 1036, 1). With this petition filed in June 2023, a FWD may be expected by December 2024, not long after the trial date.

That the FWD may come after the trial date is not dispositive. The Board has granted institution in cases where the FWD issued months after the scheduled trial date. The Board has relied on various justifications, such as diligence in filing the petition, a stipulation not to pursue the asserted grounds in litigation, minimal

investment in litigation, and the merits of the invalidity challenge being strong. *Verizon Business Network Services, Inc. v. Huawei Techs. Co*., IPR2020-01141, Paper 12 (Jan. 14, 2021). The same factors are present in this case. For instance, Petitioner diligently filed this petition (challenging long, convoluted claims) in advance of the one-year bar date and within four months of PO's infringement contentions in the Texas Litigation. (Exs. 1032-1033.) Fact discovery is not anticipated to close until March 18, 2024. (Ex. 1036, 3.) Expert discovery has not yet started. (*Id.*) And the *Markman* hearing has been scheduled for February 6, 2024, after the filing of this petition. (*Id.*)

The **third factor** (investment) also weighs against denial. The district court case is in the early stages. Fact discovery is in its infancy and the parties have not engaged in expert discovery. (Ex. 1036, 3.) The parties have not yet identified terms for construction. (*Id.*, 3-4.) Nor have there been any substantive orders in this case.

The **fourth factor** (overlap) also weighs against denial. Petitioner hereby stipulates that, if the IPR is instituted, Petitioner will not pursue the IPR grounds in the district court litigation. Thus, "[i]nstituting trial here serves overall system efficiency and integrity goals by not duplicating efforts and by resolving materially different patentability issues." *Apple, Inc. v. SEVEN Networks, LLC*, IPR2020-00156, Paper 10 at 19 (P.T.A.B. June 15, 2020); *see also Sand Revolution II, LLC v.*

Continental Intermodal Group-Trucking LLC, IPR2019-01393, Paper 24 at 12 (P.T.A.B. June 16, 2020).

While the **fifth factor** (parties) may weigh slightly in favor of denial, because Petitioner and PO are the same parties as in district court, based on a "holistic view," the factors favor institution. *Samsung Elecs. Co. Ltd. v. Dynamics Inc.*, IPR2020-00505, Paper 11 at 15 (P.T.A.B. Aug. 12, 2020).

Even if the Board determines that the above factors favor denial, the Board should not discretionarily deny institution, because this petition presents compelling merits. *See Commscope Tech. LLC v. Dali Wireless, Inc.*, IPR2022-01242, Paper 23 at 4-5 (P.T.A.B. Feb. 27, 2023) (precedential). As discussed above (§§VII, IX) and demonstrated in the file history (Ex. 1004), the applicant did not substantively dispute that most of the claimed elements now recited in the challenged claim(s) were disclosed/suggested in the prior art (*see supra*), and the universal base unit features added to the claims just before allowance are disclosed and/or suggested in the prior art presented here. (§§IX.A.1(a)-(m).) The remaining features were likewise known in the art, and in fact, are largely concepts used in inductive power systems. (§IX.A) Moreover, this Petition is the ***sole*** challenge to claims 3/13 of the '440 patent before the Board—a "crucial fact" favoring institution. *Google LLC v. Uniloc 2017 LLC*, IPR2020-00115, Paper 10 at 6 (May 12, 2020).

XI. CONCLUSION

Accordingly, Petitioner requests institution of IPR for the challenged claims based on the specified grounds.

Respectfully submitted,

Dated: June 27, 2023

By: /Joseph E. Palys/
Joseph E. Palys (Reg. No. 46,508)
Counsel for Petitioner

CERTIFICATE OF COMPLIANCE

Pursuant to 37 C.F.R. § 42.24(d), the undersigned certifies that the foregoing Petition for *Inter Partes* Review of U.S. Patent No. 9,577,440 contains, as measured by the word-processing system used to prepare this paper, 13,950 words. This word count does not include the items excluded by 37 C.F.R. § 42.24 as not counting towards the word limit.

Respectfully submitted,

Dated: June 27, 2023

By: /Joseph E. Palys/
Joseph E. Palys (Reg. No. 46,508)
Counsel for Petitioner

CERTIFICATE OF SERVICE

I hereby certify that on June 27, 2023, I caused a true and correct copy of the foregoing Petition for *Inter Partes* Review of U.S. Patent No. 9,577,440 and supporting exhibits to be served via express mail on the Patent Owner at the following correspondence address of record as listed on the USPTO Patent Center:

NK Patent Law
4101 Lake Boone Trail
Suite 218
Raleigh, NC 27607

By: /Joseph E. Palys/
Joseph E. Palys (Reg. No. 46,508)