(12) INTERNATIONAL APPLICATION PUBLISHED UNDER THE PATENT COOPERATION TREATY (PCT)

(19) World Intellectual Property Organization
International Bureau

(43) International Publication Date
23 December 2009 (23.12.2009)

PCT

(10) International Publication Number
WO 2009/155000 A2

(51) International Patent Classification:
H02J 7/00 (2006.01) *H02J 17/00* (2006.01)

(21) International Application Number:
PCT/US2009/045339

(22) International Filing Date:
27 May 2009 (27.05.2009)

(25) Filing Language: English

(26) Publication Language: English

(30) Priority Data:
61/056,354 27 May 2008 (27.05.2008) US

(71) Applicant *(for all designated States except US)*: **UNIVERSITY OF FLORIDA RESEARCH FOUNDATION, INC.** [US/US]; 223 Grinter Hall, Gainesville, FL 32611 (US).

(72) Inventor; and
(75) Inventor/Applicant *(for US only)*: **LIN, Jenshan** [US/US]; 910 S.W. 105th Terrace, Gainesville, FL 32607 (US).

(74) Agent: **PARKER, James, S.**; Saliwanchik, Lloyd, Saliwanchik, P.O. Box 142950, Gainesville, FL 32614-2950 (US).

(81) Designated States *(unless otherwise indicated, for every kind of national protection available)*: AE, AG, AL, AM, AO, AT, AU, AZ, BA, BB, BG, BH, BR, BW, BY, BZ, CA, CH, CN, CO, CR, CU, CZ, DE, DK, DM, DO, DZ, EC, EE, EG, ES, FI, GB, GD, GE, GH, GM, GT, HN, HR, HU, ID, IL, IN, IS, JP, KE, KG, KM, KN, KP, KR, KZ, LA, LC, LK, LR, LS, LT, LU, LY, MA, MD, ME, MG, MK, MN, MW, MX, MY, MZ, NA, NG, NI, NO, NZ, OM, PG, PH, PL, PT, RO, RS, RU, SC, SD, SE, SG, SK, SL, SM, ST, SV, SY, TJ, TM, TN, TR, TT, TZ, UA, UG, US, UZ, VC, VN, ZA, ZM, ZW.

(84) Designated States *(unless otherwise indicated, for every kind of regional protection available)*: ARIPO (BW, GH, GM, KE, LS, MW, MZ, NA, SD, SL, SZ, TZ, UG, ZM, ZW), Eurasian (AM, AZ, BY, KG, KZ, MD, RU, TJ, TM), European (AT, BE, BG, CH, CY, CZ, DE, DK, EE, ES, FI, FR, GB, GR, HR, HU, IE, IS, IT, LT, LU, LV, MC, MK, MT, NL, NO, PL, PT, RO, SE, SI, SK, TR), OAPI (BF, BJ, CF, CG, CI, CM, GA, GN, GQ, GW, ML, MR, NE, SN, TD, TG).

[Continued on next page]

(54) Title: METHOD AND APPARATUS FOR PRODUCING SUBSTANTIALLY UNIFORM MAGNETIC FIELD

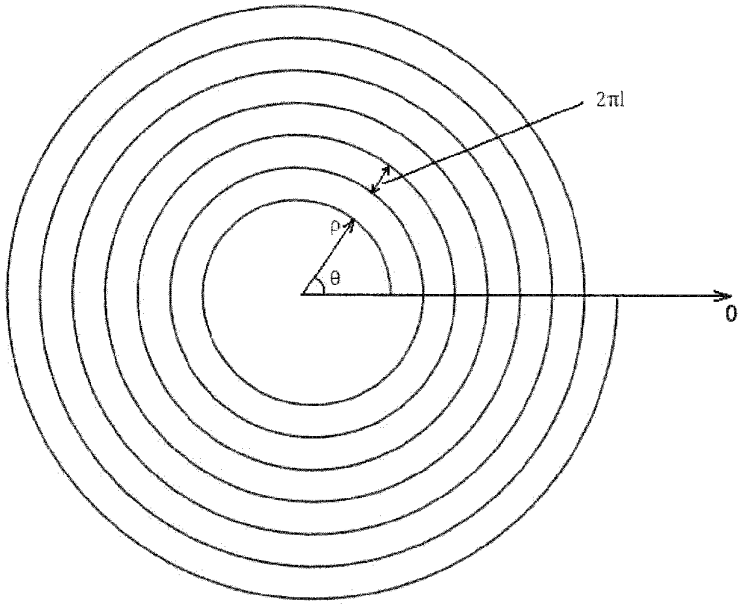

FIG. 1

(57) Abstract: A planar wireless power transmitter coil design and method are provided. A single spiral coil can be used to provide a uniform magnetic field across its surface area for location-independent planar wireless power charging. The spiral coil can be designed to have a non- constant gap between adjacent loops such that the gap between adjacent loops decreases towards the outer loops.

WO 2009/155000 A2

SAMSUNG EXHIBIT 1013

Published:

— *without international search report and to be republished upon receipt of that report (Rule 48.2(g))*

DESCRIPTION

METHOD AND APPARATUS FOR PRODUCING SUBSTANTIALLY UNIFORM MAGNETIC FIELD

CROSS-REFERENCE TO RELATED APPLICATION

The present application claims the benefit of U.S. Provisional Application Serial No. 61/056,354, filed May 27, 2008, which is hereby incorporated by reference herein in its entirety, including any figures, tables, or drawings.

BACKGROUND OF INVENTION

In recent years, consumer electronics devices such as cell phones, personal digital assistants (PDAs), and laptops are using more wireless components such as a Bluetooth headset, wireless mouse, and wireless LAN. However, the wired power line remains to impair wireless freedom. Many designs and research has been conducted to provide solutions to get rid of this wire. Inductive wireless power transmission appears to be the most promising solution to this problem.

In wireless power charging, AC current passes through a transmitter coil, inducing magnetic flux on and/or above the surface of a power platform. A receiver coil generates voltage when magnetic flux passing through the receiver coil's loop(s) changes. In many cases, the transmitter coil and the receiver coil are not of the same size.

However, when the transmitter coil and receiver coil have significantly different sizes, the voltage generated on the receiving side can be greatly affected by the receiver coil's placement on the surface of the transmitter coil.

Specifically, a typical transmitter coil has a non-uniform magnetic field across its surface area, which may cause voltage variation and impedance matching difficulty.

A normal spiral coil as shown in Figure 1 usually has constant gap between adjacent loops. For example, the circular spiral coil of Figure 1 follows the equation of

$$\rho = \rho_0 + l\theta \,. \tag{1}$$

where ρ is the radius, θ is the angle, ρ_0 is the initial radius and l is a constant. In Figure 1, the distance between adjacent wires is a constant $2p\ell$.

The magnetic field near the surface for the coil shown in Figure 1 is shown in Figure 2, which illustrates a high magnetic field strength at the center of the coil. Each loop of the coil contributes magnetic field in the area it encloses, and the magnetic field in the center is the superposition of magnetic field contributions from all the loops.

For a regular coil, the density of magnetic flux generated in the coil has a maximum value at a position closest to the coil, and has a minimum value at a position at the center of the coil. Thus, the charging efficiency may be abruptly deteriorated leading to significant variation in charging efficiency.

One approach to solve this problem is discussed in WO2007/013725A1 (Gwon *et al.*), which discloses a wireless charger having decreased variation of charging efficiency. According to Gwon *et al.*, a smaller coil is placed in the center of an outer coil, which reinforces the magnetic flux density in the center of the outer and inner coils. Thus the entire magnetic flux density is flattened as a whole in comparison to the magnetic flux density formed by only the outer coil. Though the design disclosed in Gwon *et al.* reduces the effect of variation of the magnetic flux density of the outer coil, the variation can still be significant. In addition, when the receiver coil is much smaller than the transmitter coil, the location of the receiver coil can often affect its performance.

In a similar approach, WO2007/019806A1 (Hui *et al.*) provides a design of an auxiliary winding for improved performance of a planar inductive charging platform. According to Hui *et al.* an auxiliary winding is introduced to compensate the magnetic field generated by a principle winding. The design taught by Hui *et al.* uses a similar mechanism as that taught by Gwon *et al.* in that separate coils are used to improve charging efficiency.

Thus, there exists in the art a need for improved inductive wireless power transmission.

BRIEF SUMMARY

Embodiments of the subject invention relate to a method and apparatus for providing a planar spiral transmitter coil that produces a substantially uniform magnetic field over a region of interest near the surface of the coil. Embodiments of the invention provide a planar inductive wireless power transmission system incorporating a planar spiral transmitter coil and a receiver coil.

According to embodiments of the invention, a single coil design can provide improved charging efficiency to a wireless power transmission apparatus.

Coils in accordance with embodiments of the invention can provide for a system that uses near-field coupling to transfer power. Advantageously, embodiments of the invention do not require the alignment of the two axes of two coils. Certain embodiments of the invention provide improved robustness for wireless power transfer.

According to an embodiment of the invention, a single spiral coil can be used to provide a uniform magnetic field across the coil's surface area for location-independent planar wireless power charging. Embodiments of the invention generate a uniform magnetic field across an area that enables uniform wireless power transfer insensitive to the location of the device being charged.

In one embodiment, a circular spiral coil can be used. In another embodiment, a rectangular spiral coil can be used. Other shapes can also be utilized for the coil, such as elliptical, rectangular, hexagonal, and other polygonal shapes. The spiral coil can be designed to have a non-constant gap between adjacent loops such that the gap between adjacent loops decreases towards the outer loops.

BRIEF DESCRIPTION OF DRAWINGS

Figure 1 shows a normal spiral coil having a constant gap between adjacent loops.

Figure 2 shows a plot of the magnetic field of the normal spiral coil shown in Figure 1.

Figure 3 shows a spiral coil according to an embodiment of the invention.

Figure 4 shows a plot of the magnetic field of the spiral coil shown in Figure 3.

Figure 5 shows a rectangular spiral coil according to an embodiment of the invention.

Figure 6 shows a plot of the magnetic field of the rectangular spiral coil shown in Figure 5.

DETAILED DISCLOSURE

Embodiments of the subject invention relate to a spiral coil that can generate a substantially uniform magnetic field near the surface of the coil, across at least a portion of the surface area of the coil. Embodiments provide a location-independent planar wireless power charging system. Embodiments of the spiral coil can generate a substantially uniform magnetic field near the surface of the coil, across a portion of the surface area of the coil. A wireless power transmission system in accordance with an embodiment of the invention can have performance insensitive to the placement of the receiver coil within the substantially

uniform magnetic field. The transmitter coil can be driven by a driver. In specific embodiments, the driver is a current source or a voltage source.

Specific embodiments can provide magnetic fields where the magnitude of the magnetic field in a direction perpendicular to the plane of the coil is substantially uniform over the region of interest such that $\frac{MAX - MIN}{AVERAGE}$ is less than or equal to 0.2 over the region of interest, where MAX and MIN are the maximum magnitude, and minimum magnitude, of the magnet field over the region of interest, respectively, and AVERAGE is $\frac{MAX + MIN}{2}$. Further specific embodiments can have the $\frac{MAX - MIN}{AVERAGE}$ of less than or equal to 0.1 over the region of interest and the $\frac{MAX - MIN}{AVERAGE}$ is less than or equal to 0.05 over the region of interest.

In an embodiment of a wireless power charging system, AC current passes through a transmitter coil, inducing magnetic flux on the surface of a power platform. In a specific embodiment, the frequency of the transmitter is between 1kHz and 10MHz. In a preferred embodiment, the frequency of the transmitter is in the range 100 kHz to 400 kHz, and in another embodiment, less than 1MHz. In specific embodiments, the region of interest can be a plane parallel to the plane of the coil offset from the plane of the coil by less than R, less than 30 cm, and/or less than 10 cm. The region of interest can cover a portion of, or all of the area of the coil. A receiver coil generates voltage when magnetic flux passing through the loop of the receiver coil changes. In specific embodiments, the transmitter coil and the receiver coil are not of the same size. A normal coil in accordance with an embodiment of the subject charging system can have a uniform magnetic field across its surface area, which reduces voltage variation and improves impedance matching. In a specific embodiment, the uniformity of the magnetic field can be less than 10% across the surface area of the coil, where the surface of the coil is the area enclosed by the outermost turn of the coil.

According to embodiments of the invention, to generate a more uniform field near the surface of the spiral coil, the distance between two adjacent loops can be adjusted. To reduce the magnetic field density at the center, the density of the inner loops should be less than the outer loops. In a specific embodiment, the gap between two adjacent coils decreases continuously toward the outer loops of the coil. A formula that describes the curve of a

circular spiral inductor according to an embodiment of the invention is

$$\rho(\theta) = \rho_0 + l(\theta)\theta \tag{2}$$

where $l(\theta)$ is a function of θ. θ can vary from 0 to $2\pi N$, where N is the number of turns of the coil. In an embodiment, the derivative of $l(\theta)$ is positive and decreases as θ increases. Specific functions allow $l(\theta)$, the distance between adjacent loops, to be adjusted, and can allow the field across the surface of the coil to be substantially uniform. In another embodiment, the derivative of $l(\theta)$ is such that the spacing between adjacent loops can decrease or remain the same as θ increases such that as the coil moves from the innermost radius to the outermost radius the spacing decreases.

According to an embodiment of the invention, a circular spiral coil, which can be used to obtain the formula for $l(\theta)$, is

$$\rho(\theta) = r + (1 - (1 - \frac{\theta}{2\pi N})^4)(R - r) \tag{3}$$

where R is the outermost radius, r is the innermost radius, and N is the total turns of the coil. $l(\theta)$ can be obtained by setting the right side of equation (2) equal to the right side of equation (3) and solving $l(\theta)$, where r has the same meaning as ρ_0. According to one embodiment, r is 1/4 to 1/3 of R. In another embodiment, the coil can be elliptical with appropriate modifications to equations (2) and (3).

Figure 3 shows a coil with non-constant gap between adjacent loops, in accordance with an embodiment of the subject invention. The curvature of the spiral coil of Figure 3 follows equation 3, in which R = 200 mm, r = 50 mm, and N = 8. Figure 4 shows the magnetic field strength in a perpendicular direction across the surface area of the coil of Figure 3. As shown in Figure 4, the uniformity of the magnetic field for the coil of Figure 3 is significantly improved over the uniformity of the magnetic field for the coil of Figure 1.

For a rectangular spiral inductor, narrower gaps can be used between adjacent loops as the loops become farther from the center. According to an embodiment of the present invention, the gap between adjacent loops can be derived from

$$\rho(2n\pi) - \rho[2(n-1)\pi], \text{ n=1, 2,..., N.} \tag{4}$$

where ρ is the same function as Equation 3. Figure 5 shows a rectangular spiral coil according to an embodiment of the invention. The design of the coil of Figure 5 follows equation 4, in which $R = 200$ mm, $r = 50$ mm, and $N = 8$mm. The magnetic field strength in a perpendicular direction for the coil of Figure 5 is shown in Figure 6.

The results, as shown in Figures 4 and 6, demonstrate that a substantially uniform magnetic field of spiral coil can be generated in accordance with embodiments of the invention.

Additional embodiments utilize polygonal coils, such as rectangles, squares, hexagons, and other multisided shapes, to produce the magnetic fields. The spacing between adjacent coils can decrease or stay the same at each corner of the polygon such that the spacing decreases as the coil goes from the innermost radius to the outermost radius. In specific embodiments, the spacing can continuously decrease, the spacing can be the same between two corners (along one side of the polygonal) and decrease from before each corner to after each corner, the spacing can remain the same for a portion or all of a loop (as shown in Figure 5) and have decreases as the coil moves outward, and/or combinations of these changes.

In specific embodiments, a receiver coil can be inductively coupled to the transmitter coil so as to transfer power to the receiver coil. Embodiments can use receiver coils that have areas such that the transmitter coil area is 2 to 12 times as large, 2 to 8 times as large, or 2 to 4 times as large as the receiver coil area.

All patents, patent applications, provisional applications, and publications referred to or cited herein are incorporated by reference in their entirety, including all figures and tables, to the extent they are not inconsistent with the explicit teachings of this specification.

It should be understood that the examples and embodiments described herein are for illustrative purposes only and that various modifications or changes in light thereof will be suggested to persons skilled in the art and are to be included within the spirit and purview of this application.

CLAIMS

What is claimed is:

1. An apparatus for producing a magnetic field, comprising:

a coil, wherein the coil is a planar spiral coil, where the coil has at least two loops, wherein a spacing between adjacent loops decreases continuously from an inner loop toward an outer loop of the coil, and

a driver, wherein the driver drives the coil to produce a magnetic field, wherein a magnitude of the magnetic field in a direction perpendicular to a plane of the coil is substantially uniform over a region of interest.

2. The apparatus according to claim 1, wherein the magnitude of the magnetic field in a direction perpendicular to the plane of the coil is substantially uniform over the region of interest such that $\frac{MAX - MIN}{AVERAGE}$ is less than or equal to 0.2 over the region of interest, where MAX and MIN are the maximum magnitude, and minimum magnitude, of the magnet field over the region of interest, respectively, and AVERAGE is $\frac{MAX + MIN}{2}$.

3. The apparatus according to claim 2, wherein the $\frac{MAX - MIN}{AVERAGE}$ is less than or equal to 0.1 over the region of interest.

4. The apparatus according to claim 2, wherein the $\frac{MAX - MIN}{AVERAGE}$ is less than or equal to 0.05 over the region of interest.

5. The apparatus according to claim 1, wherein the magnetic field is time-varying.

6. The apparatus according to claim 5, wherein the time-varying magnetic field has a frequency in the range 1 kHz to 10 MHz.

7. The apparatus according to claim 5, wherein the time-varying magnetic field has a frequency in the range 100 kHz to 400 kHz.

8. The apparatus according to claim 5, wherein the time varying magnetic field has a frequency less than or equal to 1 MHz.

9. An apparatus according to claim 1, wherein the coil is a planar elliptical spiral coil.

10. The apparatus according to claim 1, wherein the coil is a planar circular spiral coil, wherein the coil follows the equation:

$$\rho(\theta) = \rho_0 + l(\theta)\theta$$

where $\rho(\theta)$ is the radius of the coil, ρ_0 is the initial radius of the coil, θ is the angle with respect to the initial radius of the coil, and $l(\theta)$ is a function of θ.

11. The apparatus according to claim 10, wherein a derivative of $l(\theta)$ is positive.

12. The apparatus according to claim 11, wherein the derivative of $l(\theta)$ decreases as θ increases over at least a portion of the coil.

13. The apparatus according to claim 12, wherein the derivative of $l(\theta)$ decreases as θ increases over the coil.

14. The apparatus according to claim 1, wherein the spiral coil further follows the equation:

$$\rho(\theta) = r + (1 - (1 - \frac{\theta}{2\pi N})^4)(R - r)$$

where R is an outermost radius of the coil, r is the initial radius of the coil, and N is a number of loops of the coil.

15. The apparatus according to claim 1, wherein the region of interest is a second plane parallel to a plane of the coil.

16. The apparatus according to claim 15, wherein the second plane is offset from the plane of the coil by a distance d.

17. The apparatus according to claim 16, wherein d is less than 30 cm.

18. The apparatus according to claim 16, wherein d is less than 10 cm.

19. The apparatus according to claim 16, wherein d is less than R, where R is an outermost radius of the coil.

20. The apparatus according to claim 15, wherein the region of interest is a region covering at least a portion of an area of the coil.

21. The apparatus according to claim 15, wherein the region of interest is a region covering an area of the coil.

22. The apparatus according to claim 1, wherein the coil is a polygonal spiral coil.

23. The apparatus according to claim 1, wherein the coil is a rectangular spiral coil.

24. An apparatus for producing a magnetic field, comprising:

a coil, wherein the coil is a planer polygonal spiral coil wherein the coil has at least two loops, wherein a spacing between adjacent loops either stays the same or decreases at each corner of the polygonal going from an inner loop toward an outer loop of the coil; and

a driver, wherein the driver drives the coil to produce a magnetic field, wherein a magnitude of the magnetic field in a direction perpendicular to a plane of the coil substantially is uniform over a region of interest.

25. The apparatus according to claim 24, wherein the magnitude of the magnetic field in a direction perpendicular to the plane of the coil is substantially uniform over the region of

interest such that $\frac{MAX - MIN}{AVERAGE}$ is less than or equal to 0.2 over the region of interest, where MAX and MIN are the maximum magnitude, and minimum magnitude, of the magnet field over the region of interest, respectively, and AVERAGE is $\frac{MAX + MIN}{2}$.

26. The apparatus according to claim 25, wherein the $\frac{MAX - MIN}{AVERAGE}$ is less than or equal to 0.1 over the region of interest.

27. The apparatus according to claim 25, wherein the $\frac{MAX - MIN}{AVERAGE}$ is less than or equal to 0.05 over the region of interest.

28. The apparatus according to claim 24, wherein the magnetic field is time-varying.

29. The apparatus according to claim 28, wherein the time-varying magnetic field has a frequency in the range 1 kHz to 10 MHz.

30. The apparatus according to claim 25, wherein the time-varying magnetic field has a frequency in the range 100 kHz to 400 kHz.

31. The apparatus according to claim 25, wherein the time varying magnetic field has a frequency less than or equal to 1 MHz.

32. The apparatus according to claim 24, wherein the spacing between adjacent loops follows the equation:

$\rho(2n\pi) - \rho[2(n-1)\pi]$, $n = 1, 2, \ldots, N$, where ρ is the function

$$\rho(\theta) = r + (1 - (1 - \frac{\theta}{2\pi N})^4)(R - r),$$

where R is an outermost radius of the coil, r is an innermost radius of the coil, and N is a number of loops of the coil.

33. The apparatus according to claim 24, wherein the region of interest is a second plane parallel to the plane of the coil.

34. The apparatus according to claim 33, wherein the second plane is offset from the plane of the coil by a distance d.

35. The apparatus according to claim 34, wherein d is less than 30 cm.

36. The apparatus according to claim 34, wherein d is less than 10 cm.

37. The apparatus according to claim 34, wherein d is less than R, where R is an outermost radius of the coil.

38. The apparatus according to claim 33, wherein the region of interest is a region covering at least a portion of an area of the coil.

39. The apparatus according to claim 33, wherein the region of interest is a region covering an area of the coil.

40. The apparatus according to claim 24, wherein the polygonal coil is a square coil.

41. The apparatus according to claim 24, wherein the polygonal coil is a hexagonal coil.

42. An apparatus for producing a magnetic field, comprising:

a coil, wherein the coil is a planar spiral coil, where the coil has at least two loops, wherein a spacing between starting points of adjacent loops decreases from an inner loop toward an outer loop of the coil, and

a driver, wherein the driver drives the coil to produce a magnetic field, wherein a magnitude of the magnetic field in a direction perpendicular to the plane of the coil is substantially uniform over the region of interest such that $\frac{MAX - MIN}{AVERAGE}$ is less than or equal

to 0.2 over the region of interest, where MAX and MIN are the maximum magnitude, and minimum magnitude, of the magnet field over the region of interest, respectively, and AVERAGE is $\frac{MAX + MIN}{2}$, wherein a magnitude of the magnetic field in a direction perpendicular to a plane of the coil is substantially uniform over a region of interest.

43. A method for producing a magnetic field, comprising:

providing a coil, wherein the coil is a planar spiral coil, where the coil has at least two loops, wherein a spacing between adjacent loops decreases continuously from an inner loop toward an outer loop of the coil, and

driving the coil to produce a magnetic field, wherein a magnitude of the magnetic field in a direction perpendicular to a plane of the coil is substantially uniform over a region of interest.

44. The method according to claim 43, wherein the magnitude of the magnetic field in a direction perpendicular to the plane of the coil is substantially uniform over the region of interest such that $\frac{MAX - MIN}{AVERAGE}$ is less than or equal to 0.2 over the region of interest, where MAX and MIN are the maximum magnitude, and minimum magnitude, of the magnet field over the region of interest, respectively, and AVERAGE is $\frac{MAX + MIN}{2}$.

45. The method according to claim 44, wherein the $\frac{MAX - MIN}{AVERAGE}$ is less than or equal to 0.1 over the region of interest.

46. The method according to claim 44, wherein the $\frac{MAX - MIN}{AVERAGE}$ is less than or equal to 0.05 over the region of interest.

47. The method according to claim 44, wherein the magnetic field is time-varying.

48. The method according to claim 47, wherein the time-varying magnetic field has a frequency in the range 1 kHz to 10 MHz.

49. The method according to claim 47, wherein the time-varying magnetic field has a frequency in the range 100 kHz to 400 kHz.

50. The method according to claim 47, wherein the time varying magnetic field has a frequency less than or equal to 1 MHz.

51. An method according to claim 43, wherein the coil is a planar elliptical spiral coil.

52. The method according to claim 43, wherein the coil is a planar circular spiral coil, wherein the coil follows the equation:

$$\rho(\theta) = \rho_0 + l(\theta)\theta$$

where $\rho(\theta)$ is the radius of the coil, ρ_0 is the initial radius of the coil, θ is the angle with respect to the initial radius of the coil, and $l(\theta)$ is a function of θ.

53. The method according to claim 52, wherein a derivative of $l(\theta)$ is positive.

54. The method according to claim 53, wherein the derivative of $l(\theta)$ decreases as θ increases over at least a portion of the coil.

55. The method according to claim 54, wherein the derivative of $l(\theta)$ decreases as θ increases over the coil.

56. The method according to claim 43, wherein the spiral coil further follows the equation:

$$\rho(\theta) = r + (1 - (1 - \frac{\theta}{2\pi N})^4)(R - r)$$

where R is an outermost radius of the coil, r is the initial radius of the coil, and N is a number of loops of the coil.

57. The method according to claim 43, wherein the region of interest is a second plane parallel to a plane of the coil.

58. The method according to claim 57, wherein the second plane is offset from the plane of the coil by a distance d.

59. The method according to claim 58, wherein d is less than 30 cm.

60. The method according to claim 58, wherein d is less than 10 cm.

61. The method according to claim 58, wherein d is less than R, where R is an outermost radius of the coil.

62. The method according to claim 57, wherein the region of interest is a region covering at least a portion of an area of the coil.

63. The method according to claim 57, wherein the region of interest is a region covering an area of the coil.

64. The method according to claim 43, wherein the coil is a polygonal spiral coil.

65. The method according to claim 43, wherein the coil is a rectangular spiral coil.

66. An method for producing a magnetic field, comprising:

producing a coil, wherein the coil is a planer polygonal spiral coil wherein the coil has at least two loops, wherein a spacing between adjacent loops either stays the same or decreases at each corner of the polygonal going from an inner loop toward an outer loop of the coil; and

driving the coil to produce a magnetic field, wherein a magnitude of the magnetic field in a direction perpendicular to a plane of the coil substantially is uniform over a region of interest.

67. The method according to claim 66, wherein the magnitude of the magnetic field in a direction perpendicular to the plane of the coil is substantially uniform over the region of interest such that $\frac{MAX - MIN}{AVERAGE}$ is less than or equal to 0.2 over the region of interest, where MAX and MIN are the maximum magnitude, and minimum magnitude, of the magnet field over the region of interest, respectively, and AVERAGE is $\frac{MAX + MIN}{2}$.

68. The method according to claim 67, wherein the $\frac{MAX - MIN}{AVERAGE}$ is less than or equal to 0.1 over the region of interest.

69. The method according to claim 67, wherein the $\frac{MAX - MIN}{AVERAGE}$ is less than or equal to 0.05 over the region of interest.

70. The method according to claim 66, wherein the magnetic field is time-varying.

71. The method according to claim 70, wherein the time-varying magnetic field has a frequency in the range 1 kHz to 10 MHz.

72. The method according to claim 67, wherein the time-varying magnetic field has a frequency in the range 100 kHz to 400 kHz.

73. The method according to claim 67, wherein the time varying magnetic field has a frequency less than or equal to 1 MHz.

74. The method according to claim 66, wherein the spacing between adjacent loops follows the equation:

$\rho(2n\pi) - \rho[2(n-1)\pi]$, $n = 1, 2, \ldots$, N, where ρ is the function

$$\rho(\theta) = r + (1 - (1 - \frac{\theta}{2\pi N})^4)(R - r),$$

where R is an outermost radius of the coil, r is an innermost radius of the coil, and N is a number of loops of the coil.

75. The method according to claim 66, wherein the region of interest is a second plane parallel to the plane of the coil.

76. The method according to claim 75, wherein the second plane is offset from the plane of the coil by a distance d.

77. The method according to claim 76, wherein d is less than 30 cm.

78. The method according to claim 76, wherein d is less than 10 cm.

79. The method according to claim 76, wherein d is less than R, where R is an outermost radius of the coil.

80. The method according to claim 75, wherein the region of interest is a region covering at least a portion of an area of the coil.

81. The method according to claim 75, wherein the region of interest is a region covering an area of the coil.

82. The method according to claim 66, wherein the polygonal coil is a square coil.

83. The method according to claim 66, wherein the polygonal coil is a hexagonal coil.

84. An method for producing a magnetic field, comprising:

providing a coil, wherein the coil is a planar spiral coil, where the coil has at least two loops, wherein a spacing between starting points of adjacent loops decreases from an inner loop toward an outer loop of the coil, and

driving the coil to produce a magnetic field, wherein a magnitude of the magnetic field in a direction perpendicular to the plane of the coil is substantially uniform over the region of interest such that $\frac{MAX - MIN}{AVERAGE}$ is less than or equal to 0.2 over the region of interest, where MAX and MIN are the maximum magnitude, and minimum magnitude, of the magnet field over the region of interest, respectively, and AVERAGE is $\frac{MAX + MIN}{2}$, wherein a magnitude of the magnetic field in a direction perpendicular to a plane of the coil is substantially uniform over a region of interest.

85. A system for inductive power transfer, comprising:

an apparatus for producing a magnetic field according to any of claims 1-42; and

a receiver coil, wherein when the receiver coil is positioned proximate the apparatus for producing the magnetic field, power is inductively transfer to the receiver coil.

86. The system according to claim 85, wherein the coil has an area in the range of 2 to 12 times as large as an area of the receiver coil.

87. A method for inductively transferring power, comprising:

implementing the method according to any of claims 43-84; and

providing a receiver coil proximate to the coil such that power is inductively coupled to the receiver coil.

88. The method according to claim 87, wherein the coil has an area in the range of 2 to 12 times as large as an area of the receiver coil.

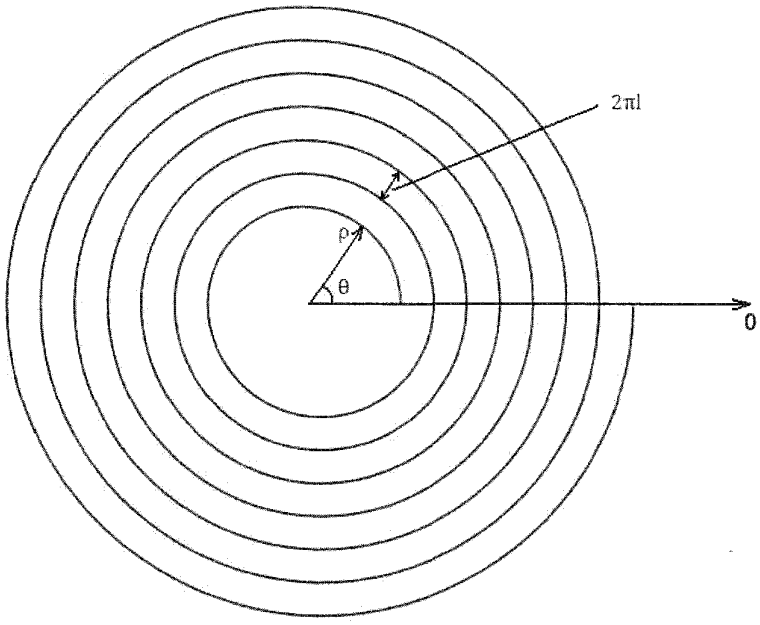
2πl
ρ
θ
0

FIG. 1

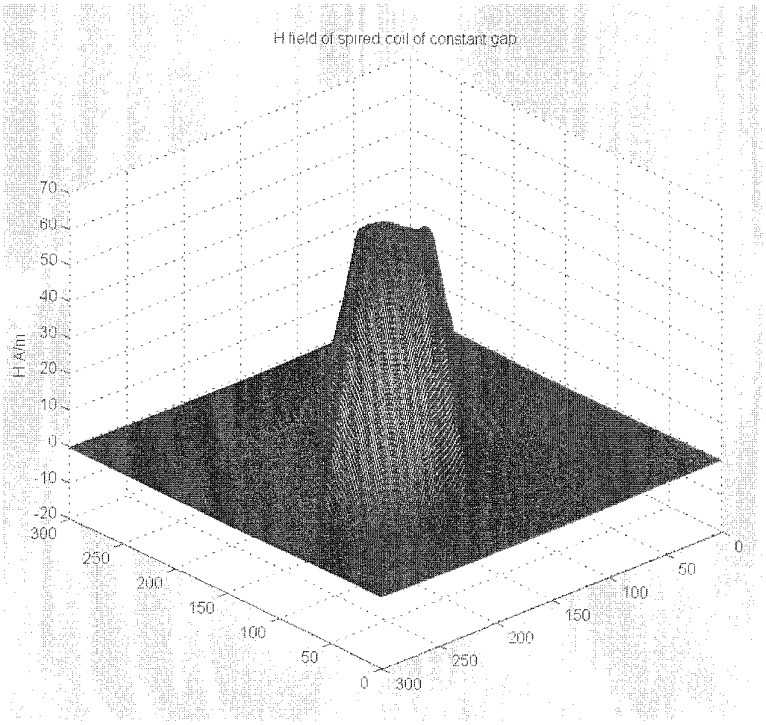
H field of spired coil of constant gap
H A/m
70
60
50
40
30
20
10
0
-10
-20
300
250
200
150
100
50
0
0
50
100
150
200
250
300

FIG. 2

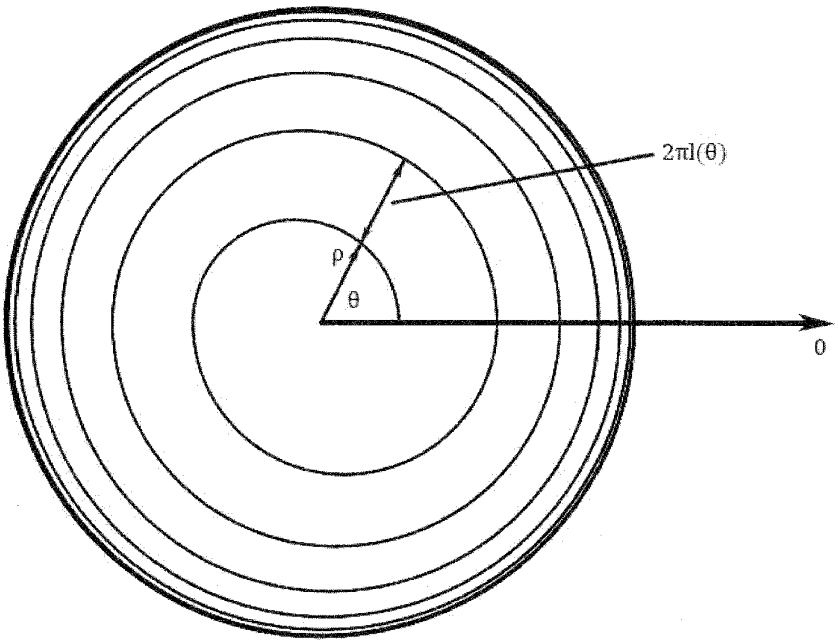

FIG. 3

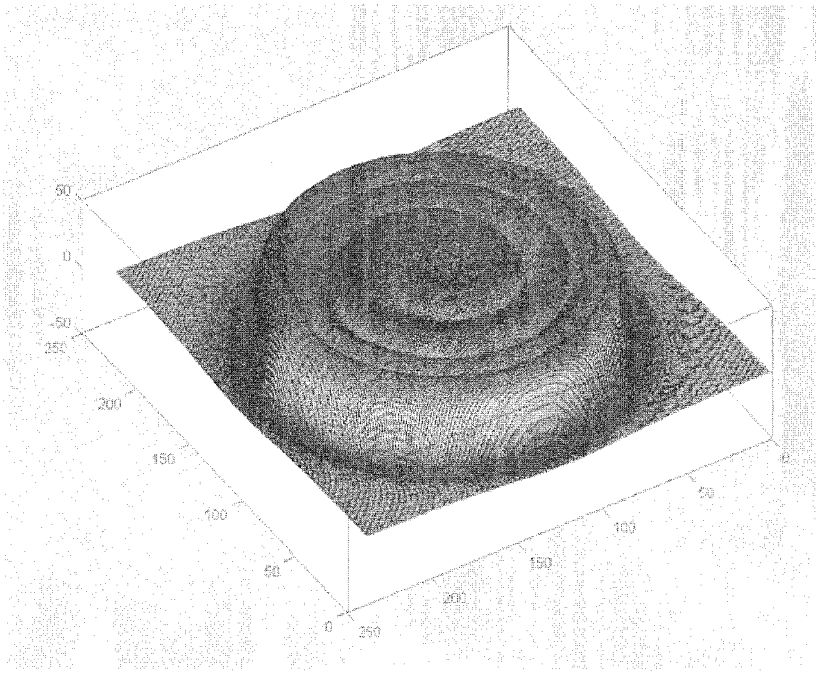

FIG. 4

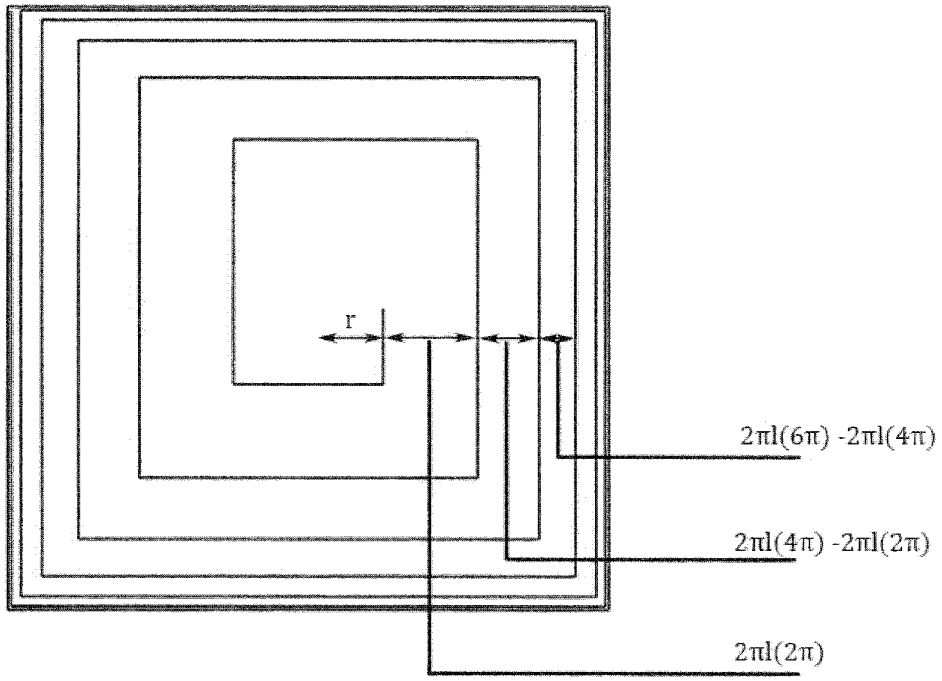
r
2πl(6π) -2πl(4π)
2πl(4π) -2πl(2π)
2πl(2π)

FIG. 5

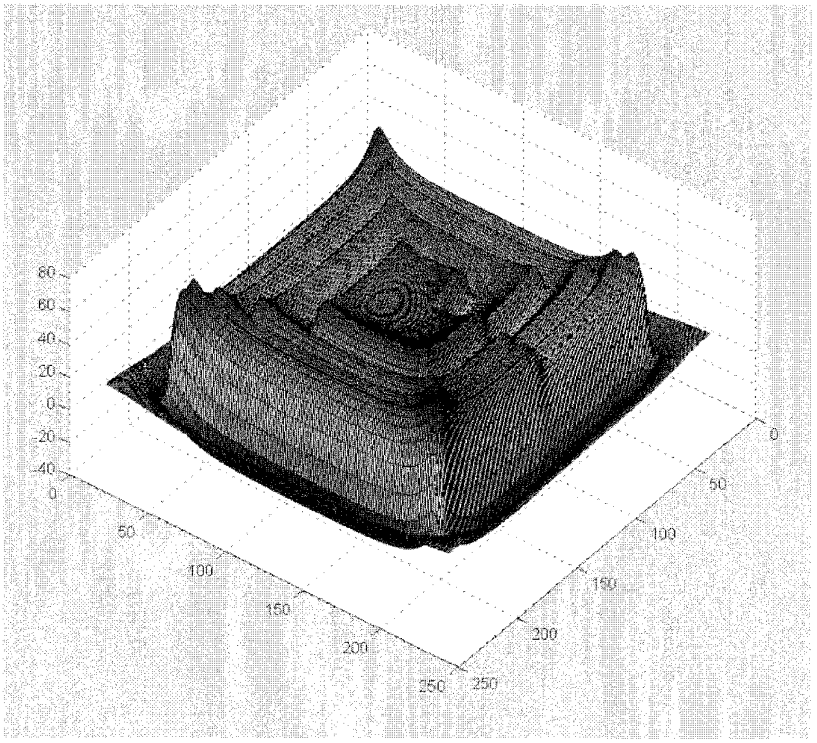
80
60
40
20
0
-20
-40
0
50
100
150
200
250
0
50
100
150
200
250

FIG. 6