US 20050127868A1

(19) United States

(12) Patent Application Publication

(10) Pub. No.: US 2005/0127868 A1

(43) Pub. Date: Jun. 16, 2005

Calhoon et al.

(54) **INDUCTIVE BATTERY CHARGER**

(75) Inventors: **John Charles Calhoon**, Woodinville, WA (US); **Leroy B. Keely**, Portola Valley, CA (US); **William Mitchell**, Medina, WA (US)

Correspondence Address:
BANNER & WITCOFF LTD.,
ATTORNEYS FOR MICROSOFT
1001 G STREET , N.W.
ELEVENTH STREET
WASHINGTON, DC 20001-4597 (US)

(73) Assignee: **Microsoft Corporation**, Redmond, WA (US)

(21) Appl. No.: **10/733,820**

(22) Filed: **Dec. 12, 2003**

Publication Classification

(51) **Int. Cl.**[7] **H02J 7/00**

(52) **U.S. Cl.** **320/108**

(57) **ABSTRACT**

An inductive charging system transfers energy by inductively coupling a source coil on a power source to a receiver coil for a battery charger. Source current may be received in the battery charger and converted for charging a battery pack. A wireless communication arrangement may also provide for authentication of devices that are allowed by the source to be powered or otherwise charged.

SAMSUNG EXHIBIT 1041

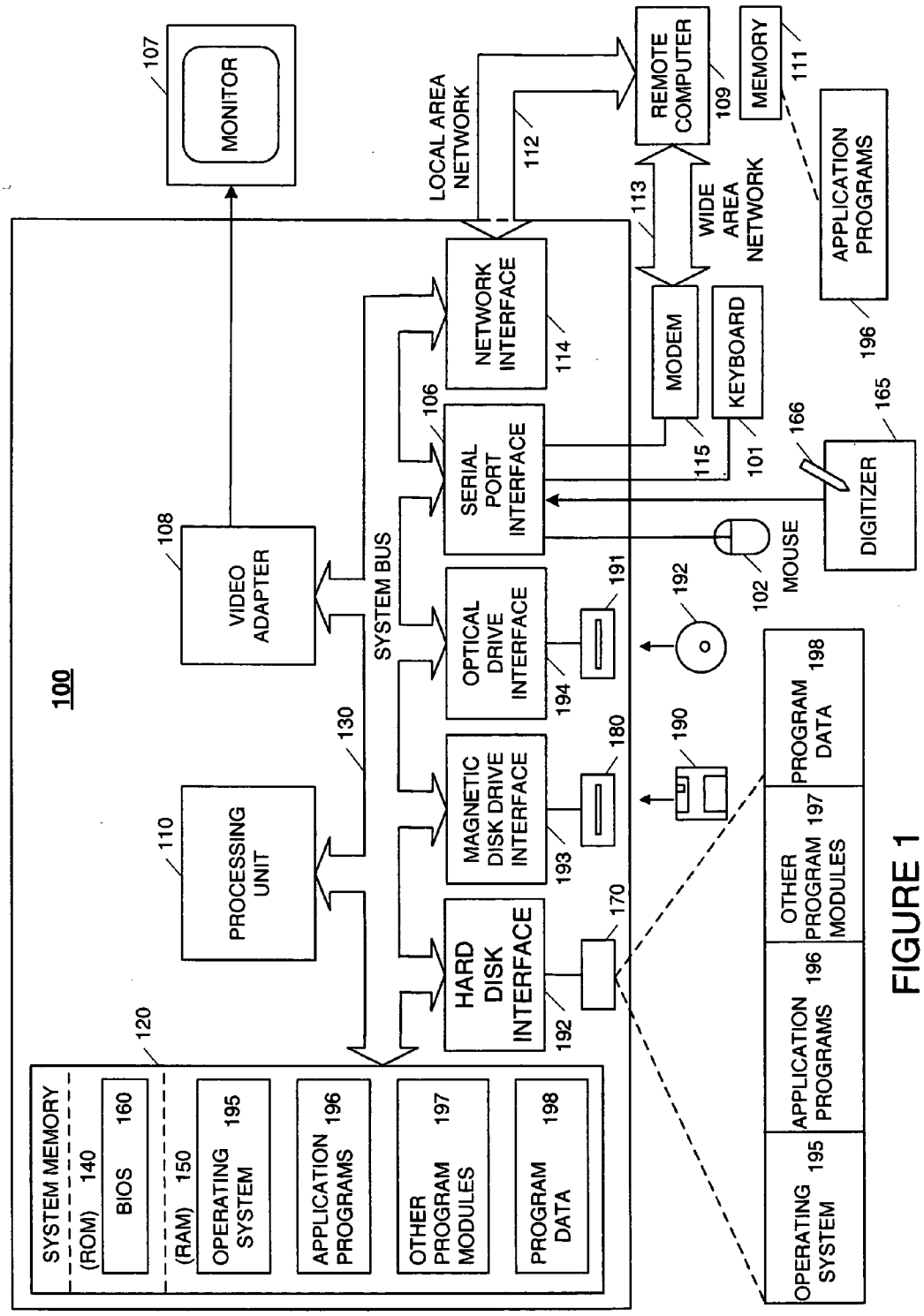
100
MONITOR
107
VIDEO ADAPTER
108
PROCESSING UNIT
110
130
SYSTEM BUS
LOCAL AREA NETWORK
112
NETWORK INTERFACE
114
SERIAL PORT INTERFACE
106
OPTICAL DRIVE INTERFACE
194
MAGNETIC DISK DRIVE INTERFACE
193
HARD DISK INTERFACE
192
REMOTE COMPUTER
109
113
WIDE AREA NETWORK
MODEM
115
KEYBOARD
101
MEMORY
111
APPLICATION PROGRAMS
196
DIGITIZER
165
166
MOUSE
102
191
192
180
190
170
SYSTEM MEMORY
(ROM) 140
BIOS 160
(RAM) 150
OPERATING SYSTEM 195
APPLICATION PROGRAMS 196
OTHER PROGRAM MODULES 197
PROGRAM DATA 198
120
OPERATING SYSTEM 195
APPLICATION PROGRAMS 196
OTHER PROGRAM MODULES 197
PROGRAM DATA 198

FIGURE 1

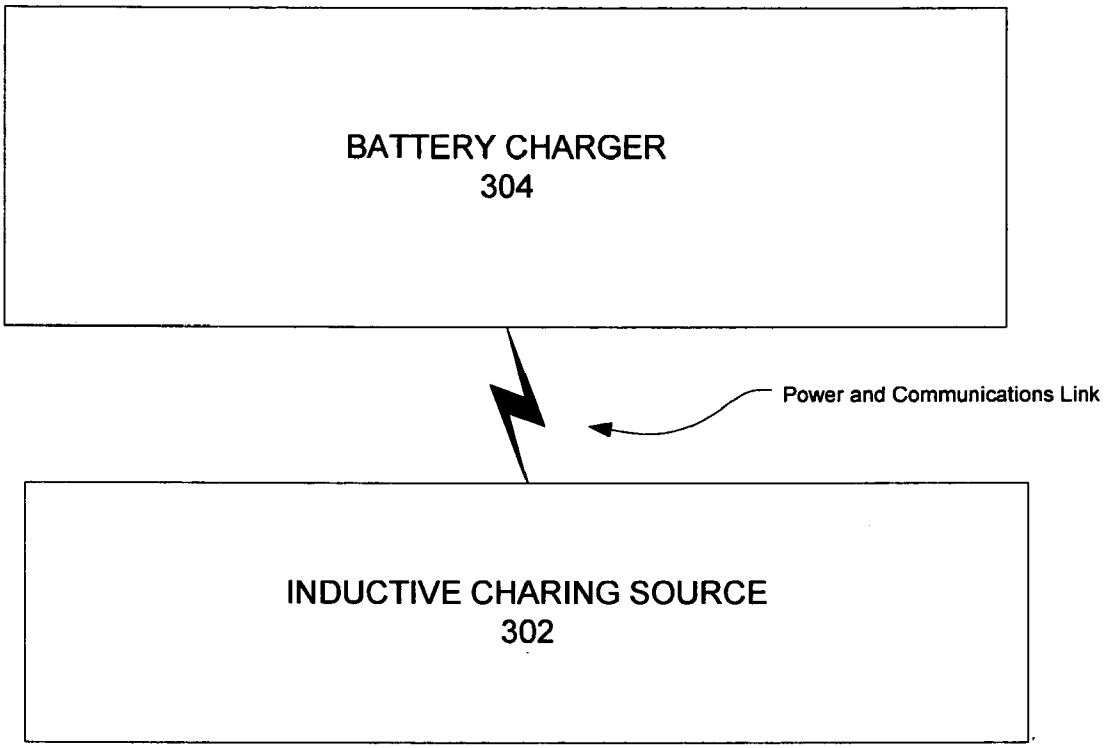
BATTERY CHARGER
304
Power and Communications Link
INDUCTIVE CHARING SOURCE
302

FIGURE 2

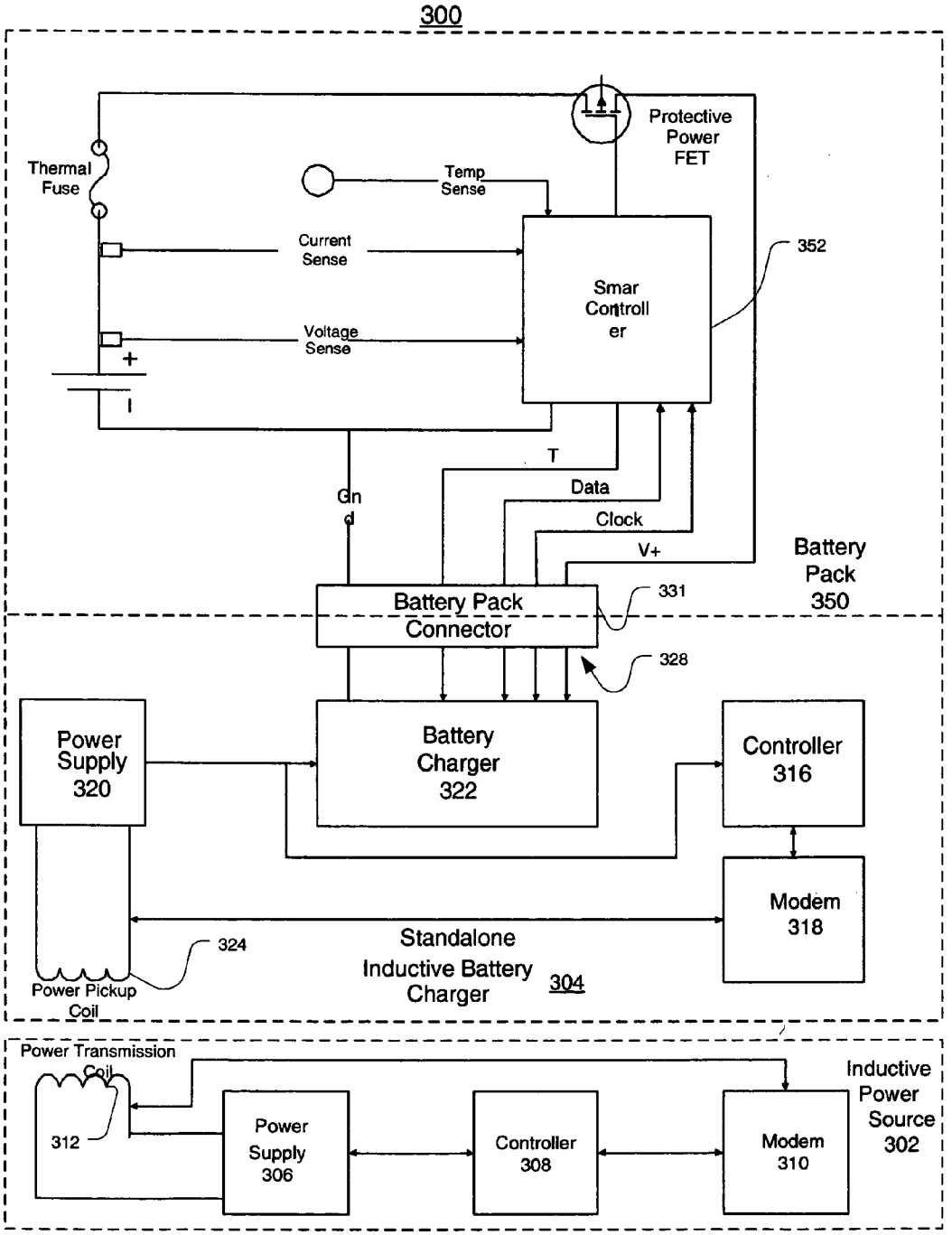
300
Protective Power FET
Thermal Fuse
Temp Sense
Current Sense
Voltage Sense
Smar Controll er
352
+
T
Data
Clock
V+
Gn d
Battery Pack 350
Battery Pack Connector
331
328
Power Supply 320
Battery Charger 322
Controller 316
Modem 318
324
Standalone Inductive Battery Charger 304
Power Pickup Coil
Power Transmission Coil
312
Power Supply 306
Controller 308
Modem 310
Inductive Power Source 302

FIGURE 3

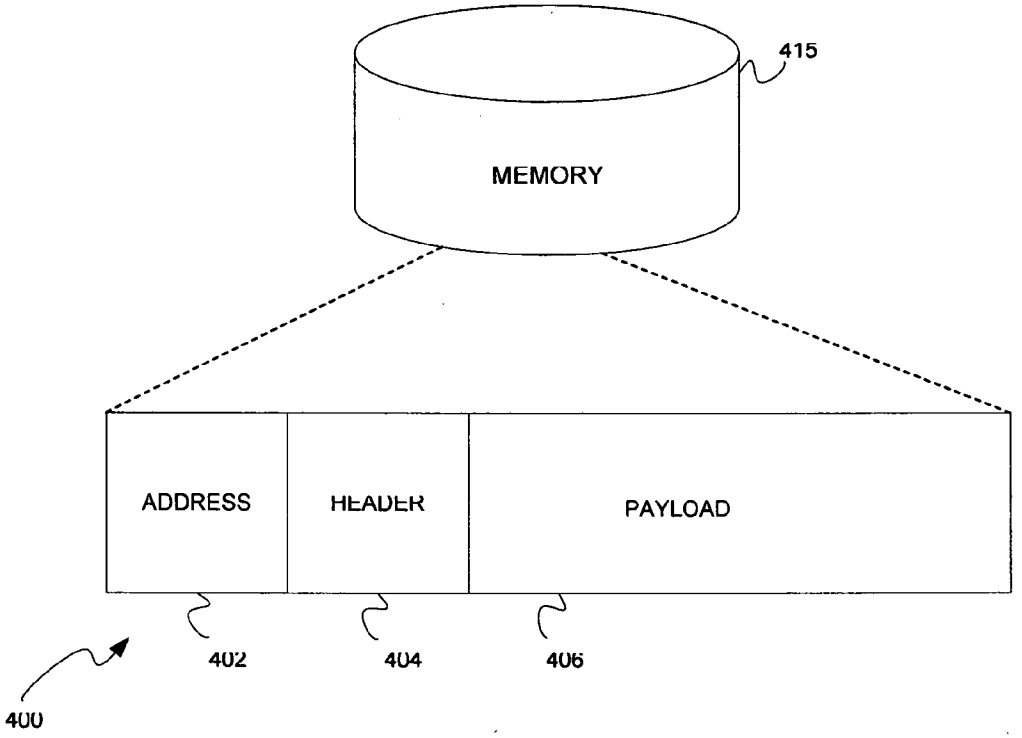

FIGURE 4

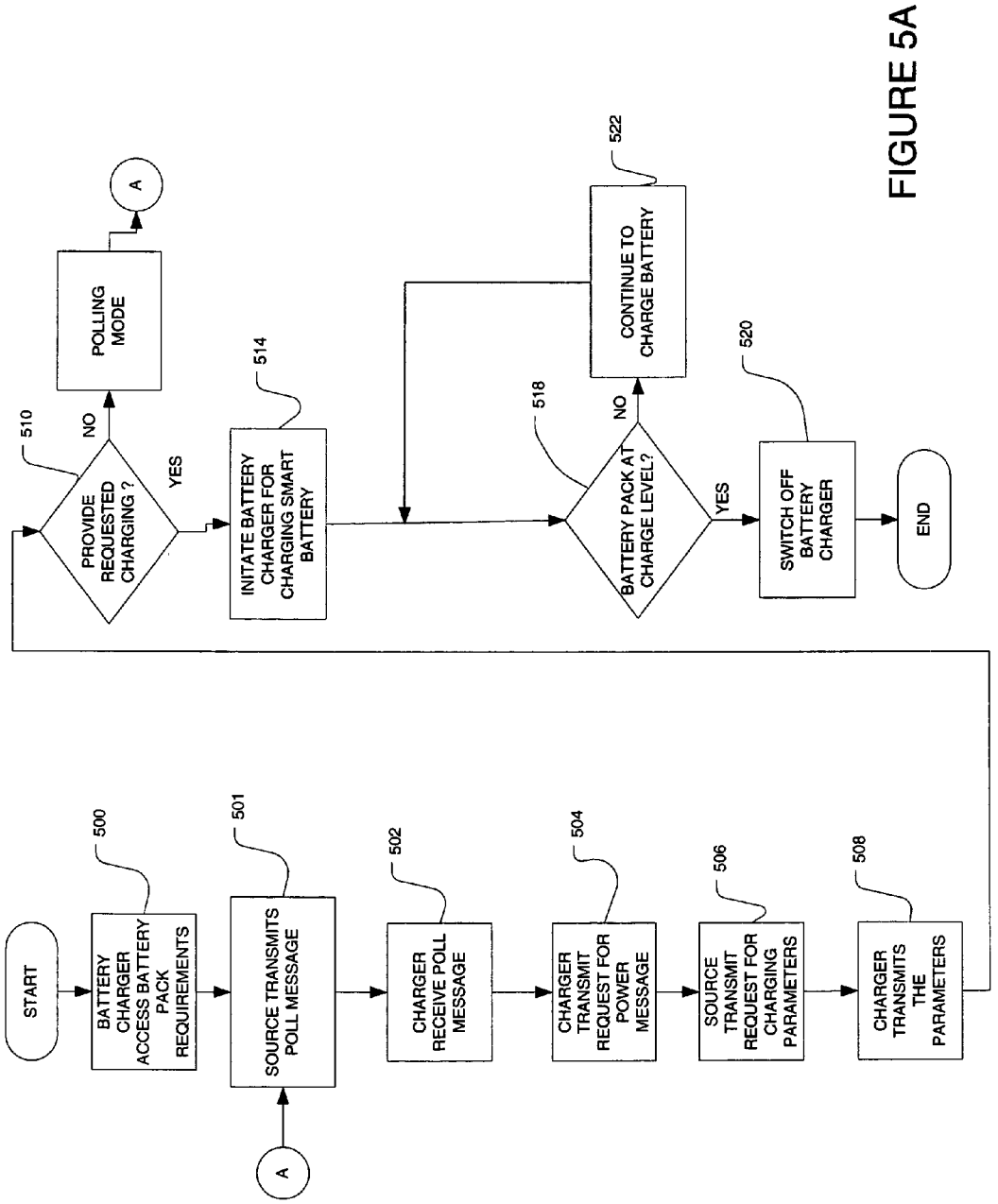
START
BATTERY CHARGER ACCESS BATTERY PACK REQUIREMENTS
500
SOURCE TRANSMITS POLL MESSAGE
501
A
CHARGER RECEIVE POLL MESSAGE
502
CHARGER TRANSMIT REQUEST FOR POWER MESSAGE
504
SOURCE TRANSMIT REQUEST FOR CHARGING PARAMETERS
506
CHARGER TRANSMITS THE PARAMETERS
508
PROVIDE REQUESTED CHARGING ?
510
NO
YES
POLLING MODE
A
INITATE BATTERY CHARGER FOR CHARGING SMART BATTERY
514
BATTERY PACK AT CHARGE LEVEL?
518
NO
YES
CONTINUE TO CHARGE BATTERY
522
SWITCH OFF BATTERY CHARGER
520
END

FIGURE 5A

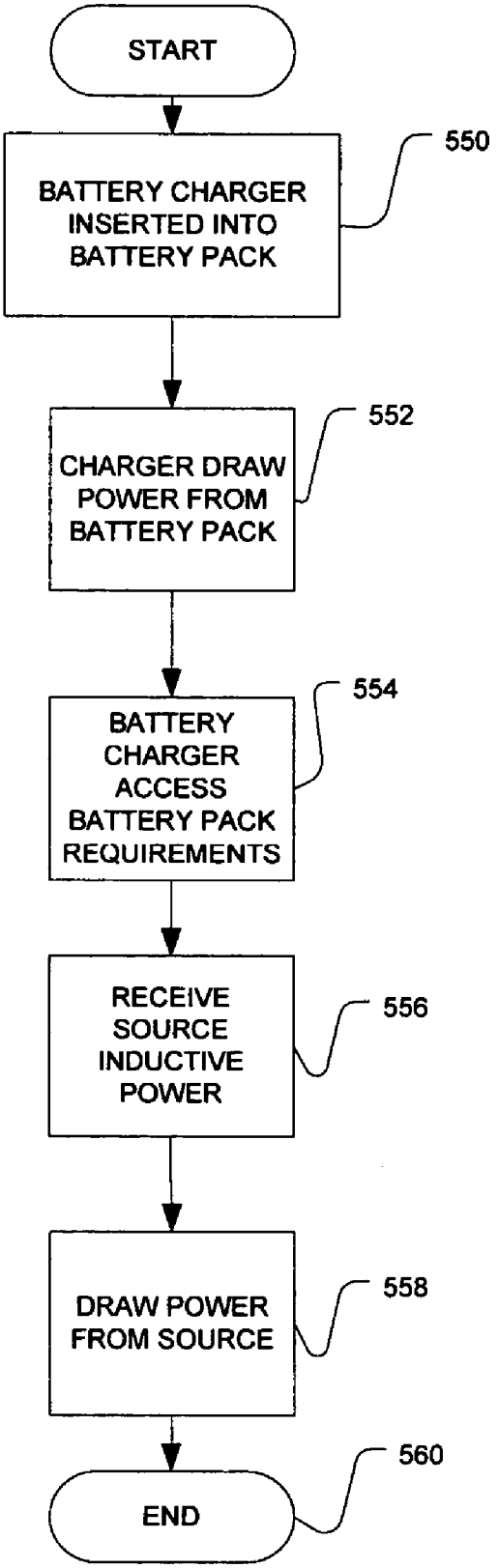
START
BATTERY CHARGER INSERTED INTO BATTERY PACK
550
CHARGER DRAW POWER FROM BATTERY PACK
552
BATTERY CHARGER ACCESS BATTERY PACK REQUIREMENTS
554
RECEIVE SOURCE INDUCTIVE POWER
556
DRAW POWER FROM SOURCE
558
END
560

FIGURE 5B

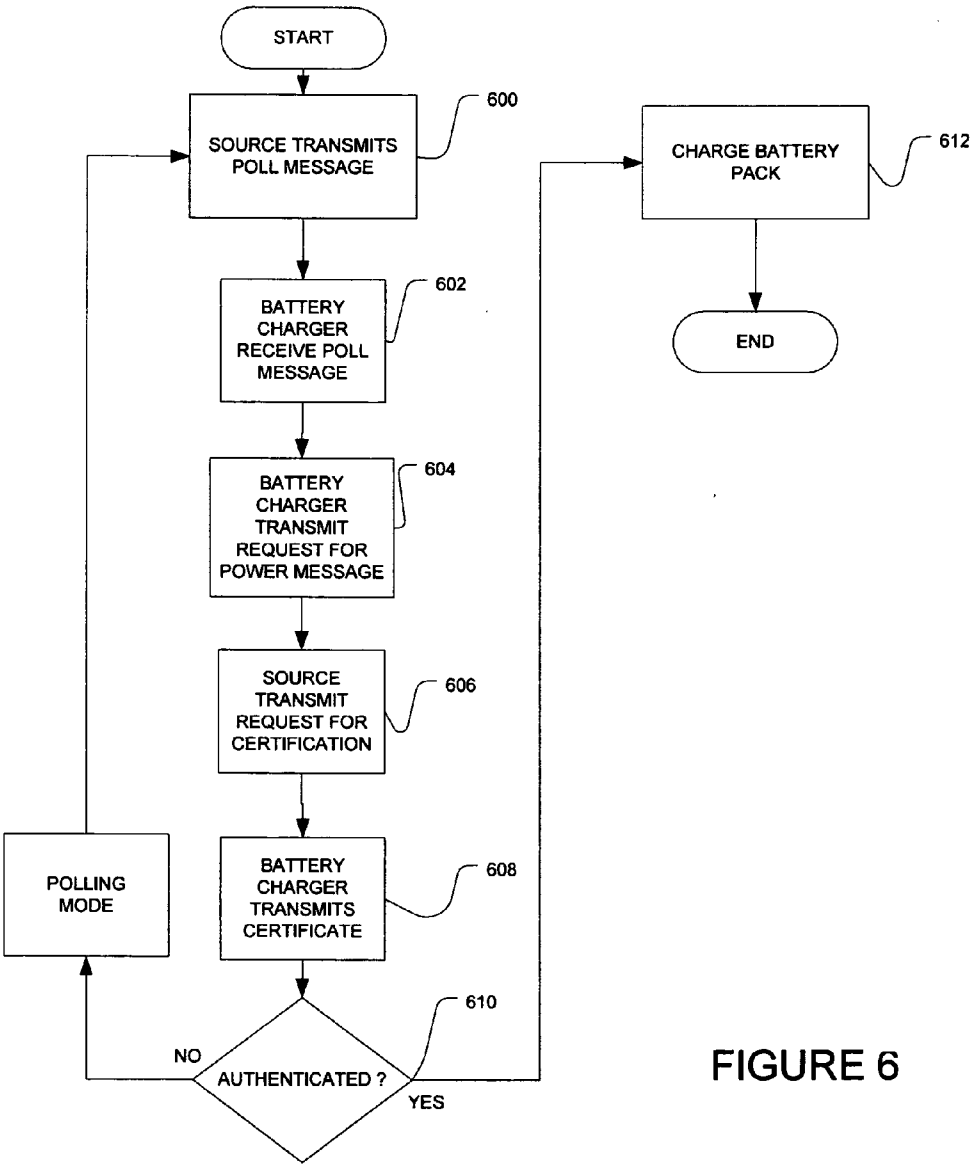
START
SOURCE TRANSMITS POLL MESSAGE
600
BATTERY CHARGER RECEIVE POLL MESSAGE
602
BATTERY CHARGER TRANSMIT REQUEST FOR POWER MESSAGE
604
SOURCE TRANSMIT REQUEST FOR CERTIFICATION
606
BATTERY CHARGER TRANSMITS CERTIFICATE
608
AUTHENTICATED ?
610
NO
YES
POLLING MODE
CHARGE BATTERY PACK
612
END

FIGURE 6

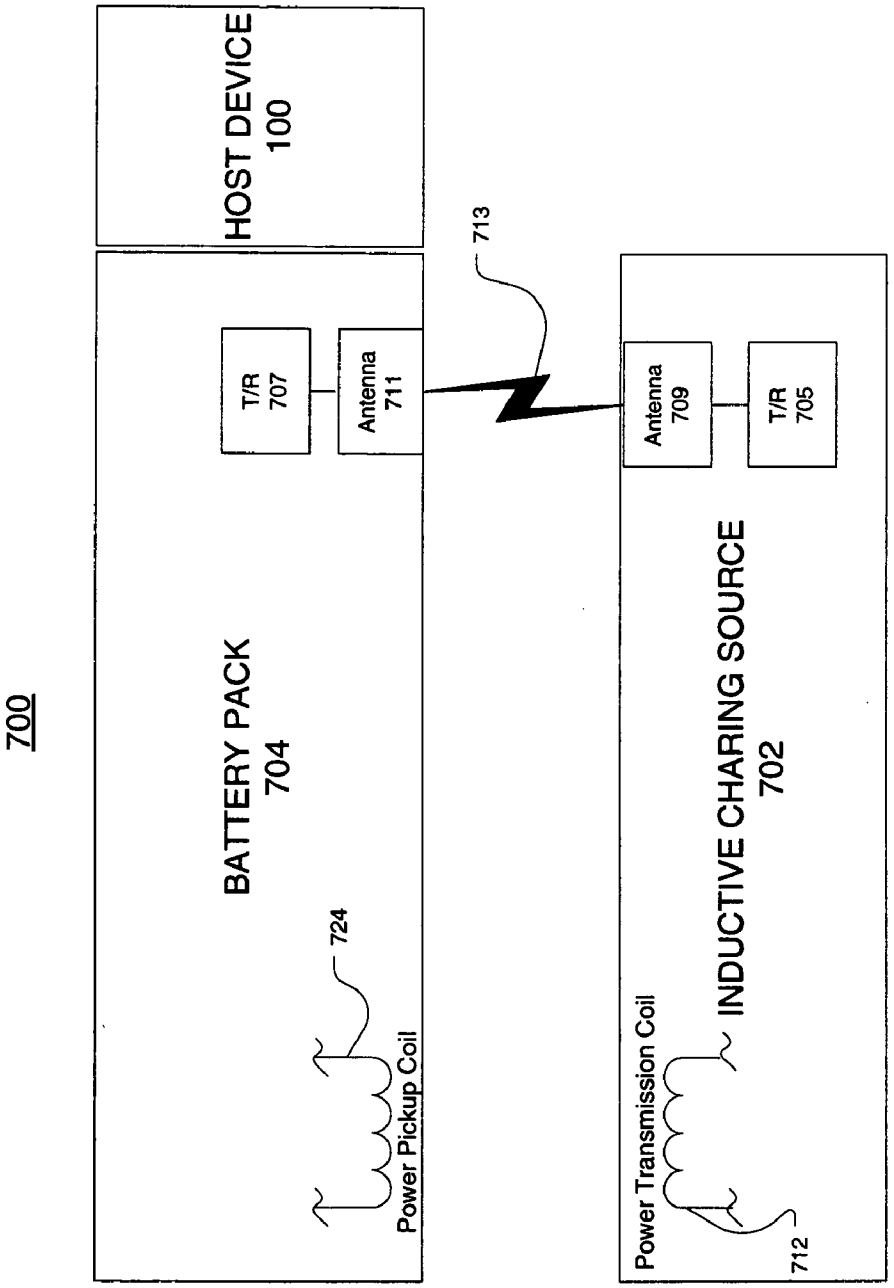
700
HOST DEVICE
100
BATTERY PACK
704
T/R
707
Antenna
711
713
724
Power Pickup Coil
Antenna
709
T/R
705
INDUCTIVE CHARING SOURCE
702
Power Transmission Coil
712

FIGURE 7

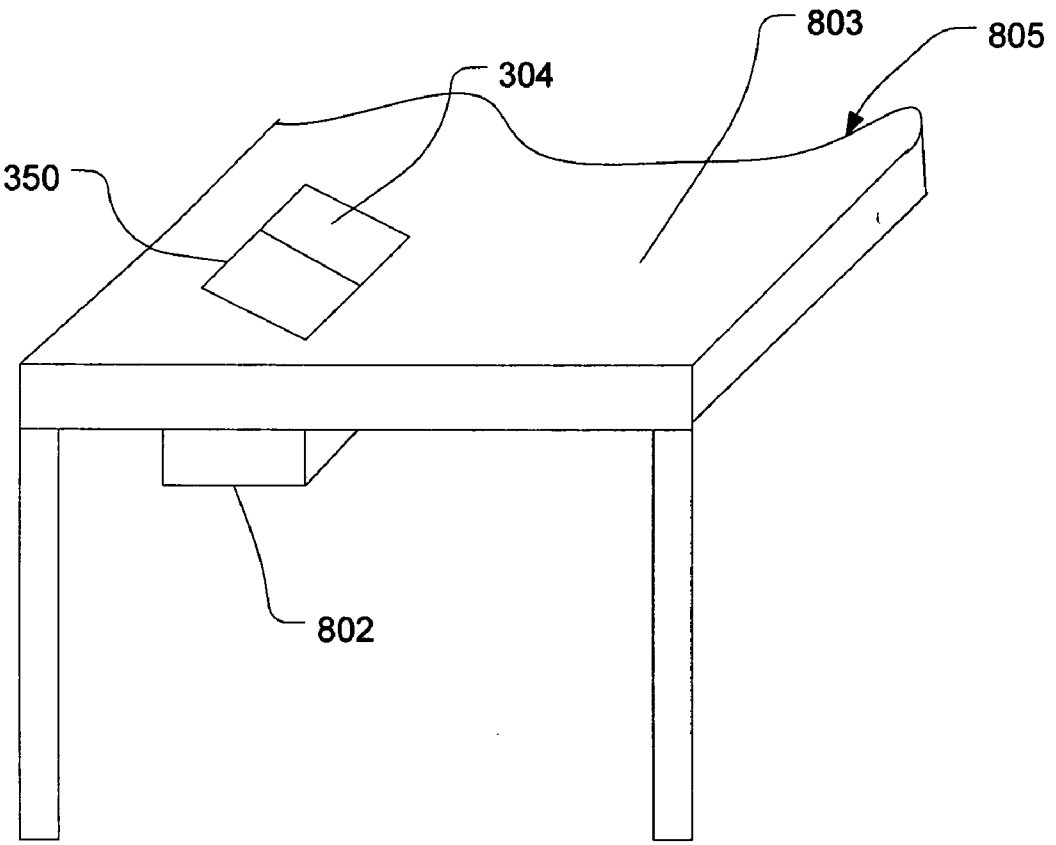

FIGURE 8

INDUCTIVE BATTERY CHARGER

CROSS REFERENCE TO RELATED APPLICATIONS

[0001] The present application is related to application Ser. No. _____ (Atty. Docket No. 003797.00690), entitled "Inductively Charged Battery Pack," and filed on Dec. 12, 2003; which is related to application Ser. No. _____ (Atty. Docket No. 003797.00691), entitled "Inductive Power Adapter," and filed on Dec. 12, 2003, each of which is incorporated by reference herein as to their entireties.

FIELD OF THE INVENTION

[0002] Aspects of the present invention relate to battery packs that can be coupled to electronic apparatus. More particularly, aspects of the present invention relate to an inductive battery charger for physically coupling and electrically communicating with battery packs and providing electrical energy for charging a battery pack.

BACKGROUND OF THE INVENTION

[0003] Computer systems have become increasingly popular in modern society. Conventional computer systems, especially computer systems using graphical user interface (GUI) systems, accept user input from a conventional input device, such as a keyboard for entering text, and a pointing device, such as a mouse for operating the graphical user interface. The processing capabilities of computers have increased the efficiency and productivity of workers in a wide range of professions. Marketing staff, corporate executives, professionals and others use mobile computers to easily transport their data and work with computers out of the office or on travel.

[0004] The popularity of portable electronic devices allow users to work and play free of restrictive power cords and chargers for a limited period of time. As people work outside of their traditional office, they often find themselves using their notebook computers, cellular phones, digital assistants and tablet computers. Similarly, people enjoying themselves away from the home take advantage of portable music players, digital cameras, electronic game systems and the like while on travel or doing outdoors activities.

[0005] Rechargeable batteries are used for portable electronic devices, such as portable computing systems, video cameras, and mobile phones. While users attempt to operate with the freedom of mobile computing, there are still basically tethered to the power cable. The users must think about how much power is available for mobile use. This time period is limited to the type of battery and other factors.

[0006] To replace rechargeable batteries, a contactless power supply may be used in commercial aircraft. In one example, U.S. Pat. No. 6,489,745 to Kories describes a contactless power supply for a laptop computer with a seatback tray of a commercial aircraft. This patent is incorporated by reference. The power supply of Kories has several drawbacks. There is no active communication between the power supply and the seatback. Unwanted flux could be sent to metallic objects or cause other problems. Further, the system of Kories would most likely risk damage to current mobile device designs and does not allow for device independence for powering, because the power supply part must be part of the laptop computer. Thus, the system of Kories is undesirable, and has limited use, if any, for recent battery packs designs.

[0007] To recharge batteries, U.S. Pat. No. 5,959,433 to Rohde describes a universal inductive battery charger system having a charging coil and rechargeable battery pack. The system of Rohde has several drawbacks. There is no active communication between the inductive charger and the battery pack. Unwanted flux could be sent to metallic objects or cause other problems. Thus, the system Rohde is undesirable, and limited use, if any, use for recent battery packs designs.

[0008] In view of the foregoing, what is needed is an apparatus and method to support battery packs for an untethered environment for the new media technologies and productivity activities for mobile electronic devices.

SUMMARY OF THE INVENTION

[0009] Aspects of the present invention pertain to an inductive battery charger and a method of charging a battery pack. In one aspect, the present invention relates to an inductive battery charger for physically coupling and electrically communicating with a battery pack and providing electrical energy for charging a battery pack. An aspect of the present invention pertains to an apparatus for transmitting inductive energy to a battery charger assembly. An aspect of the present invention pertains to a battery charger assembly configured for receiving inductive energy. An aspect of the present invention pertains to a computer implemented method and computer system, such as a battery charger assembly, for charging a battery pack. Aspect of the present invention pertains to a battery charger assembly that may receive electrical power through a trusted power arrangement.

[0010] The above and other aspects, features and advantages of the present invention will be readily apparent and fully understood from the following detailed description illustrative embodiments in conjunction with the accompanying drawings, which are included by way of example, and not by way of limitation with regard to the claimed invention.

BRIEF DESCRIPTION OF THE DRAWINGS

[0011] **FIG. 1** is a functional block diagram of an illustrative general-purpose digital computing environment in which one or more aspects of the present invention may be implemented;

[0012] **FIG. 2** is a schematic representation of a charging system according to one or more aspects of the present invention;

[0013] **FIG. 3** is a functional block diagram of an illustrative charging system according to one or more aspects of the present invention;

[0014] **FIG. 4** is a block diagram of an illustrative data structure according to one or more aspects of the present invention;

[0015] **FIG. 5A** is a flow diagram of a first illustrative charging process according to one or more aspects of the present invention;

[0016] **FIG. 5B** is a flow diagram of an illustrative communication process according to one or more aspects of the present invention;

[0017] **FIG. 6** is a flow diagram of a second illustrative charging process according to one or more aspects of the present invention;

[0018] **FIG. 7** is a functional block diagram of an alternative charging system according to one or more aspects of the present invention; and

[0019] **FIG. 8** is a schematic representation of a charging system according to one or more aspects of the present invention.

DETAILED DESCRIPTION OF THE INVENTION

[0020] The following description is divided into subsections to assist the reader. The subsections include Overview; Charging System Environment; Illustrative Data Structure; Illustrative Operational Environment; and Alternative Charging Systems.

[0021] Overview

[0022] Aspects of the present invention provide inductive charging arrangements enabling user convenience in wireless power environments for mobile computing and communications devices. An inductive charging system transfers energy by inductively coupling a source coil on a power source to a receiver coil for a battery charger portion. Current flows through the source coil and the resulting magnetic flux induces an alternating current through the magnetic field and across the receiver coil, completing an energy transfer circuit. The source current may be received in the battery charger and converted for charging a battery pack. Aspects of the present invention enable communication between an inductive power source and the battery charger which maximizes the flexibility, efficiency, or safety of inductive charging solutions. Aspects of the present invention may provide for wirelessly communicating operating parameters and protocol between an inductive power source and an inductive battery charger. A wireless communication arrangement may also provide for authentication of devices that are allowed by the power source or trusted entity to be powered or otherwise charged. This prevents computerized virus infections in the battery pack that may subsequently infect a host computer connected to the battery pack and improves security functions for inductive power arrangements.

[0023] In one illustrative aspect, an inductive power source, e.g., a chargepad or battery charger, recharges legacy battery packs without the need for wall-plug powered stand alone chargers that plague the digital workplace and the home. A smart battery charger assembly inductively communicating with the inductive power source is used to couple to and deliver power as needed to the legacy batteries for recharging.

[0024] In another illustrative aspect, a battery charger assembly may include a smart controller configured to assess a legacy battery pack power requirements and wirelessly bi-directionally communicates the requirements to an inductive power source. In one illustrative aspect, an inductive source power can be in a low power mode or broadcasting mode for the bidirectional communications. The battery charger assembly may be configured to receive inductive energy transferred to it from the inductive power source. And the battery charger assembly can convert the inductive power for use with the legacy battery pack. In another aspect, a wireless communication arrangement, via an inductive communications pathway or other methods, may also provide for authentication of the battery charger that are allowed by the power source or trusted entity.

[0025] In an illustrative aspect, an apparatus is configured for transmitting inductive energy to a battery charger assembly. The battery charger assembly may include a microprocessor for processing data relevant to the inductive energy. In the apparatus, a memory may be provided for storing computer readable instructions relevant to providing energy to a battery charger assembly. A processor unit may be operatively coupled to the memory. A transmission element may be operatively coupled to the processor so as to provide the inductive energy to the battery charger assembly.

[0026] In another illustrative an aspect, a battery charger assembly may be configured for receiving inductive energy. A processor unit in the battery charger may be provided for processing computer readable data relevant to the inductive energy and for processing data communications with a computer system. The battery charger assembly may include a pick up coil configured for receiving the inductive energy. The battery charger assembly may include a charger unit may be operatively coupled to the processor unit and the pick up coil for performing charging functions. The charger may be configured to output a direct current to an energy storage unit, such as a battery pack.

[0027] In an illustrative aspect, a computer implemented method is provided for charging a battery pack with a stand-alone battery charger system. The system may include a memory for storing computer readable instructions that, when executed by a processor executes various functions. In one aspect, a polling message is received from an inductive power source. In another aspect, a request for power is transmitted to the inductive charging source. Based on the request for power, inductive power may be received from the inductive power source. In another aspect, authenticating data can be transmitted to the inductive charging source. Thus, a battery charger system can receive electrical power through a trusted power arrangement.

[0028] Charging System Environment

[0029] Various aspects of the present invention may at least be described in the general context of apparatus and computer-executable instructions, such as program modules, executed by one or more processing devices for a charging source or a battery charger assembly. Accordingly, it may be helpful to briefly discuss the components and operation of a charging system environment on which various aspects of the present invention may be implemented. Accordingly, charging system arrangements with respect to one or more aspects of the present invention are shown in **FIGS. 2-8**. Referring to **FIG. 2**, a charging system **300** may include an inductive charging source **302** that wirelessly provides electrical power and/or data communications to an inductive battery charger assembly **304**. In one specific arrangement shown in **FIG. 3**, the battery charger assembly **304** may be physically connected to a typical legacy battery pack **350** while receiving the inductive energy from the inductive

charging source **302**. The battery pack **350** need not be aware of the inductive charging source. This enables the battery pack **350** to include any battery chemistry, such as NiMH (Nickel-Metal Hydride), Li+ (lithium-ion), or NiCd (nickel-cadmium) and other battery formulations. The battery charger assembly **304** may include a housing for enclosing the electrical components therein. The battery charger assembly **304** may be implemented in any appropriate shape and in a number of form factors, such as a clip-on device that mates with typically legacy battery packs, as well as any number of slots, stand or dock-type charger configurations.

[**0030**] Referring to **FIG. 3**, inductive charging source **302** may be electrically connected to an alternating current power source, such as utility electrical power and the like. In such an arrangement, inductive charging source **302** may include a power supply **306** that receives electric energy via the conventional method of a cord physically coupled to a standard wall electrical outlet (not shown) for 60 Hz, 120 volt power, or alternatively, 50 Hz at 230 volts and other frequency/voltage combinations. Nevertheless, a direct current arrangement is possible. Inductive charging source **302** includes one or more power transmission coils **312** operatively coupled to the power supply **306**. The operative coupling may include any form of network connection including physical wiring and/or logical connections, and the like.

[**0031**] The battery charger assembly **304** may be configured to receive electrical energy from inductive power source **302**. In one arrangement shown in **FIG. 3**, the battery charger assembly **304** includes a power pickup coil **324** that is operatively connected to a power supply **320**. Power pickup coil **324** receives inductive energy from the power transmission coil **312** of inductive power source **302**. In one operation, the power supply **320** of battery charger assembly **304** provides electrical energy to a battery charger **322** that supplies energy to legacy battery pack **350** through the line denoted as "V+" in **FIG. 3**.

[**0032**] In one arrangement, power supply **306** of inductive charging source **302** may be configured to convert the frequency of the alternating line current from 50/60 Hz to a higher frequency for inductively transferring energy from the power transmission coil **312** to the power pickup coil **324** of battery pack **304**. The power supply **320** of battery charger assembly **304** may be configured receive the transmission frequency. The specific frequencies of transmission can be varied, i.e. for instance within the range of 500 Hz to 10 KHz. Nevertheless, other frequencies can be used.

[**0033**] In one operation, battery charger assembly **304** may be brought proximate or juxtaposed to the inductive charging source **302**. The power transmission coil **312** of the charging source **302** and the power pickup coil **324** of the battery charger assembly **304** are then inductively coupled by a charging alternating current at any appropriate frequency to transfer the electrical power. In an arrangement of multiple battery charger assemblies, each power transmission coil **312** of power source **302** may be controlled independently of each other. This feature provides a more flexible and adaptable solution for persons or organizations with different electronic devices. The multiple battery charger assemblies may have different power requirements that can be handled by the source **302**. For example, cellular phone power battery requirements are generally less than the power needs of a laptop computer battery.

[**0034**] In one arrangement, inductive charging source **302** and battery charger assembly **304** may be configured for wireless data communications. Example processes for implementing wireless data communications aspects are shown in **FIGS. 5A, 5B** and **6**. Accordingly, the inductive charging source **302** may include a communication device **310**, such as a modem or a network interface device. Likewise, the inductive charging module **301** of battery charger assembly **304** may also include a communications device, such as a modern **318** or a network interface device. For ease of explanation, the communication device is referred herein to as a modem. The modem **310**, **318** may be configured for power line carrier communications. In such a configuration, modem **310**, **318** may be operatively coupled to the respective coils **312**, **324**. In an arrangement, modem **310**, **318** may be adapted to modulate and demodulate signals appropriate to the frequency supplied by the power supply **306**, **320** to receive and transmit data. Thus, the power transmission coil **312** of the charging source **302** and the power pickup coil **324** of battery charger assembly **304** are used to provide inductive data communications over an inductive pathway.

[**0035**] In one arrangement, the modems **310**, **318** may be implemented with power line networking technology in accordance with the HOMEPLUG 1.0 standard specification available from the Homeplug Powerline Alliance located at San Ramon, Calif., USA. For example, under a homeplug implementation, the modems would use a burst mode form of orthogonal frequency-division (OFDM) multiplexing with a forward error-correction scheme. OFDM is well known technique in industry. Rates of data transfer with homeplug can be upwards of 14 Mbps, if desired. The media access (MAC) protocol in a homeplug configuration is a based on the well-known carrier sense multiple access with collision avoidance (CSMA/CA) protocol. Rates of data transfer can be upwards of 14 Mbps, if desired. Nevertheless, a wide range of other well-known power line networking technologies could be used, such as X-10 protocol and frequency-shift keying schemes used for internetworking within homes via the power lines. Advantageously, the battery charger assembly **304** and inductive charging source **302** can be electrically coupled for wireless energy transfer functionality and data communications to wirelessly communicate operating parameters, such as charging voltage and maximum expected power consumption.

[**0036**] The inductive charging source **302** may include a microprocessor controller **308** that may be configured for controlling components, such as the power supply **306** or modem **310**, for different modes of operation, processing and storing data. Likewise, the battery charger assembly **304** may also include a controller **316** that may be configured for receiving, transmitting and storing data and performing mathematic calculations relevant to legacy battery pack **350**. Additionally, controller **308** of source **302** and controller **316** of charger **304** are enabled to have features of authentication and security. Examples of the authentication and security aspects of the present invention as shown in **FIGS. 5A and 6**. Controller **308** and controller **316** may have computer-readable media **415** (see **FIG. 4**), which provides nonvolatile storage of computer readable instructions, data structures, program modules, and other data relevant for charging operations. Other examples of computer-readable media include flash memory, random access memories (RAMs), read only memories (ROMs), and the like.

[0037] The controller **316** of battery charger assembly **304** may include a communications bus **328** with an appropriate battery connector **331** for interaction with the legacy battery pack **350**. In one arrangement, controller **316** may be implemented with one or more features of a System Management Bus (SMbus). It is believed that the SMbus or features thereof have not been used before in inductive power arrangement or inductive battery chargers. Referring to **FIG. 3**, in one arrangement, the communication bus **328** may be configured as such a System Management Bus (SMbus). The bus **328** can be used to inform controller **316** as to a wide range of information about the legacy battery pack **350**, e.g., current, voltage, power requirements, and rated capacity. The SMBus is a two-wire interface system. As shown in **FIG. 3**, one wire handles the data transfer; and the other wire pertains to the clock. An example of a SMbus and functions are described in the System Management Bus Specification Revision 2.0 standard available from the SBS Implementers Forum. If desired, controller **308** may be implemented with one or more features of a SMBus system as well. It is recognized that smart controller **352** of legacy battery pack **350** in **FIG. 3** may with operate an SMbus via connector **331**.

[0038] In an alternative arrangement shown in **FIG. 3**, the power supply **320** can provide current as an output to the battery charger **322**, and the power supply **320** can be a SMBus device enabled to communicate on the SMbus with other devices. Likewise, battery charger **322**, controller **316**, or modem **318** can be SMbus devices. In this alternative arrangement, power supply **320** may be in logical communications with battery charger **322**, controller **316**, or modem **318**. The power supply **320**, battery charger **322**, controller **316**, or modem **318** may be configured to communicate with protocols such as shown in the noted System Management Bus Specification. Alternatively, the inductive power source **302** may include components therein configured as SMBus devices. For example, power supply **306**, controller **308**, or modem **310** may be SMBus operable devices. It will be appreciated that the connections shown in **FIG. 3** are exemplary and other applicable techniques for establishing a communications link between the components may used. For example, in the battery charger assembly **304**, the connections between the controller **316** and power supply **320**; between the controller **316** and the battery charger **322**; between the power supply **320** and battery pack **350**; and between the power supply **320** and modem **318** are exemplary. In another alternative arrangement, a thermistor or "T" line between the charger **322** of battery charger assembly **304** and the battery pack **350** can be used as a safety control to disrupt charging in the event the battery pack **350** experiences an overcharge or over-temperature condition.

[0039] Illustrative Data Structure

[0040] **FIG. 4** illustrates an example schematic diagram of a data structure **400** which can be transmitted between the modems **310**, **318** or, alternatively, between a plurality of modems in a multiple battery charger assembly environment. Data structure **400** may include an address **402**, a header **404**, and a payload **406**. Address **402** includes data for the specific battery pack being charged. This is useful in the multiple battery pack environment because different battery packs can have different charging requirements. The header **404** includes general data to be used by the controllers **308**, controller **316**, are modems **310**, **318**. The payload **406** contents specific data to be used by the controllers **308**, **316** relevant to the charging operation. Such data would include operating parameters, such as charging voltage and maximum expected power consumption. Nevertheless, the payload **406** may include other data, such as authentication information. Data structure **400** could be implemented with well-known powerline networking technology and/or encapsulated in another structure of packets for transmission, such as Bluetooth protocol. homeplug, or X-10 protocol and the like.

[0041] Illustrative Operational Environment

[0042] In one arrangement, controller **316** may contain computer readable data programmed by the manufacturer or other entity, such as a battery charger ID number, serial number, manufacturer's name and date of manufacture. This data can be used by the inductive power source **302** for novel power operations according to aspects of the present invention, such as shown in **FIGS. 5A, 5B**, and **6**.

[0043] Accordingly, **FIG. 5A** illustrates an example communication process according to one or more aspects of the present invention that enables communication between a charging source and a battery charger assembly. Various aspects of the present invention may at least be described in the general context of apparatus and computer-executable instructions, such as program modules, executed by one or more computers or other devices, such as microprocessors. For example, controller **308** and controller **316** may have computer-readable media **415**, which provides nonvolatile storage of computer readable instructions, data structures, program modules, and other data relevant for charging operations. In one arrangement, inductive charging source **302** and battery charger assembly **304** may be configured for wireless data communications as well as energy transfer. Accordingly, inductive power source **302** may be configured to poll for other devices, such as the battery charger assembly **304**.

[0044] In **FIG. 5A**, process blocks **500-510** illustrate a negotiation process in which communications and power requirements can be established between inductive charging source **302** and battery charger assembly **304**. To start the process in block **500**, battery charger assembly **304** is enabled to determine the power requirements or other data of a battery pack **350** when inserted into communication bus **328**. Requirements data are obtained from the smart controller **352** of battery pack **350**. In one implementation, the requirements data may include those as specified in the smart battery data specification revision 1.1 available from the SBS Implementer Forum. For example, values for the charging current and the charging voltage may be determined from the battery pack **350**. The requirements data, once obtained from the battery pack **350**, may be stored in the computer readable storage **415** of controller **316** for use during charging operations or for later transmission to the inductive power source **302**. Nevertheless, the controller **316** of battery charger assembly **350** may be configured to read, via the bus **328**, other functions, alarms, and signals from the battery pack **350**. For example, values can be obtained from the battery pack **350** for battery pack voltage, relative state of charge, absolute state of charge, remaining capacity, full charge capacity, alarm warning, average time to full, battery chemistry.

[0045] In process block **501**, the inductive charging source **302**, in a low power or broadcast mode, may poll for

compatible devices through one or more of the power transmission coils **312** and listens for replies from the devices, such as battery charger assembly **304**. The inductive charging source **302** may perform the polling operation in a sequential fashion, making each power transmission coil an independent node in the system **300**. This independent node arrangement enables multiple battery charger assemblies to communicate with and be powered by inductive charging source **302**. The multiple battery packs may have different power requirements which can be handled by the source **302**. For example, a cellular phone power requirement is less than that of a laptop computer. In a polling operation, power transmission coil **312** can be energized and de-energized in a regular periodic fashion. For example, the energizing and de-energizing period range between any appropriate value, such as 100-1000 msec., or 1-60 sec. Nevertheless, other time values are possible. Advantageously, this periodic arrangement can conserve energy.

[**0046**] In process block **502**, the battery charger assembly **304** has at least a listening mode and a charging mode. In the listening mode, the battery charger assembly **304**, via controller **316**, is configured to listen for a charging source **302** through the power pickup coil **324**. In generally, the battery charger assembly **304** may be brought within a proximate distance to the inductive charging source **302**. Once the transmission coil **312** and pickup coil **324** are in close enough proximity to establish communications and inductive coupling, the communication signals received by the pickup coil **324** are de-modulated by the modem **308** and routed to the battery charger assembly **304** controller **316**. Of course, the communication signals may be the type as referenced with data structure **400**(See **FIG. 4**). It should be recognized that the controller **308** generates communication signals in the source **302** and the signals are converted for power line modulation by the modem **308**. The communication signals are routed from the modem **308** to the power transmission coil **312** for transmission to a power pickup coil **324**.

[**0047**] In process block **504**, as determined by the battery charger assembly **304** obtaining an indication during the requirements data step shown in block **500**, if battery pack **350** is in need for recharging, the battery charger assembly **304** may respond to the source **302** poll with a message requesting that power be supplied for charging thereof. In process block **506**, upon receiving the battery charger assembly **304** request for power, the source **302** may request information or charging parameters from the battery charger assembly **304**, such as the required charging voltage and maximum power requirement. Nevertheless, the inductive charging source **302** can request other information relevant to the battery charger assembly **304**, such as a battery charger identification (ID) number, battery type chemistry of the battery pack, or serial number of the battery charger or the serial number of the battery pack. This information can be used for security, data integrity, or other purposes. In process block **508**, the battery charger assembly **304** transmits the requested information. In process block **510**, the source **302**, via controller **308**, determines if it can supply the requested voltage and power to battery charger assembly **304**. In process block **512**, if the source **302** cannot supply the requested voltage and/or power, then the source **302** can change to the polling mode. Alternatively, if the source **302** can provide the voltage and/or power, then the process flows to process block **514** for the charging mode.

[**0048**] After the negotiation process, in process block **514**, when the battery charger assembly **304** begins to receive its requested voltage and power, the controller **316** may turn on the battery charger **322** in order to charge the battery pack **350**. In process block **520**, if the battery is charged to the desired level, the battery charger **322** can be switched off-line. When power from the source is lost, the battery pack returns to its listening mode. In process block **522**, if the battery **314** is not at the desired level of charge, then the charging process is continued.

[**0049**] **FIG. 5B** illustrates an example communication process according to one or more aspects of the present invention that between a charging source and the battery charger assembly. In blocks **550-552**, when a battery pack **350** is inserted into the battery charger assembly **304**, the battery charger assembly **304** may draw power from the battery pack. In block **554**, controller **316** of the battery charger assembly **304** may determine or otherwise access the battery pack **350** charging requirements and charge parameters as discussed with respect to block **500** shown in **FIG. 5A**. The requirements data and parameters can be stored in the non-volatile computer readable memory **415** for later use. In block **556**, when the power pickup coil **324** in the battery charger assembly **304** comes into close enough proximity to the power transmission coil **312** in the source **302**, the power supply **320** may be configured to generate enough current to power the controller **316**. Thus, in block **558**, the battery charger assembly **304** may switch from battery power to inductive power from the source **302**. Nevertheless, any or all of steps shown in blocks **514-522** in **FIG. 5A** can be implemented in the process shown in **FIG. 5A**. The configuration shown in **FIG. 5B** is useful when the battery charger assembly **304** is reused to charge different battery packs. The charger **302** may be inserted in different battery packs to access the charging requirements of each pack. In one example, the battery pack ID of each battery pack may be stored along with the charging requirements. Battery charger assembly **304** may then have a plurality of different charging requirements stored therein. In the standalone configuration, because the requirements data may be stored for each battery pack, the battery charger assembly **304** can be battery pack independent, and can still provide the needed charging when the battery charger assembly **304** is in proximity of the inductive power source **302** for charging.

[**0050**] **FIG. 6** illustrates an illustrative communication process according to one or more aspects of the present invention to enable communication between an inductive power source and a battery charging assembly. In one arrangement, inductive charging source **302** and battery charger assembly **304** may be configured for wireless data communications as well as energy transfer based on authentication information thereby forming a trusted energy transfer arrangement. This trusted energy transfer arrangement is useful to prevent authorized use of an inductive charging source. Also the trusted energy transfer arrangement may prevent a computer virus from infecting the controller **316** or the host device **100**. Additionally, this trusted arrangement can prevent unwanted power from being transmitted to metallic objects, such as writing instruments, beverage cans and staplers, which may be placed in close proximity to a charging source.

[0051] To start the process, in process block **600**, the inductive charging source **302**, in a low power or broadcast mode, polls for compatible devices through one or more of the power transmission coils **312** and listens for replies from the devices, such as battery charger assembly **304**. In process block **602**, in the listening mode, the battery charger assembly **304**, via controller **316**, is configured to listen for a charging source through the power pickup coil **324**. Once the transmission coil **312** and pickup coil **324** are in close enough proximity to establish communications and inductive coupling, the communication signals received by the pickup coil **324** are de-modulated by the modem **308** and routed to the battery charger assembly **304** controller **316**. In process block **604**, if battery cell **314** is in need for recharging, the battery charger assembly **304** may respond to the source **302** poll with a message requesting that power be supplied thereof.

[0052] In process block **606**, upon receiving the battery pack's request for power, the inductive charging source **302** may request for a security certificate or digital signature from the battery charger assembly **304** to authenticate it. The security certification or digital signature may be stored in the computer readable storage of the controller **308**. In process block **608**, if battery charger assembly **304** has a digital certificate or digital signature stored, the battery charger assembly **304** transmits it to the source **302**. In process block **610**, if the battery charger assembly **304** is authenticated in view of the certification or signature, the source **302** supplies the requested voltage and power the battery charger as shown in process block **612**. During the powering process, the source **302** may periodically poll the battery charger assembly **304**, and if no response is received or inductive coupling is removed, the source **302** changes state from the charging mode to return to the polling mode. In process block **610**, if the battery charger assembly **304** is not authenticated, or the source **302** cannot supply the requested voltage or power, the source **302** will remain in low power mode, and the source **302** will return to polling mode. Nevertheless, steps any or all of steps shown in blocks **500-522** in **FIG. 5A**, and steps shown in blocks **550-560** in **FIG. 5B**, and can be implemented in the process shown in **FIG. 6**.

[0053] Alternative Charging Systems

[0054] An alternative the charging system **700** is illustrated in **FIG. 7**. Charging system **700** components may include an inductive charging source **702** that wirelessly provides electrical power to a battery pack **704** configured with an inductive charging portion or module **701**. In the charging system **700** communications between the inductive charging source **702** and battery pack **704** may be accomplished via an antenna and transceiver arrangement. A transceiver **705**, **707** may be operatively coupled to an antenna **709**, **711** for receiving and transmitting a wireless communication payload for both the inductive charging source **702** and the battery pack **704**. Any or all features and functions, subsystems shown in **FIG. 3** can be implemented in the charging system **700** shown in **FIG. 7**. For example, transceiver **705**, **707** are respectively operatively coupled to a controller of inductive charging source **702**, and controller of battery charger **704**. Power pickup coil **724** can receive inductive energy from the power transmission coil **712** of inductive source **702**.

[0055] In one arrangement, a communications link **713** in accordance with the Bluetooth™ Global Specification for wireless connectivity may be implemented to transmit battery charging information between the inductive charging source **702** and battery pack **704**. It should be appreciated that conventional Bluetooth™ technology was introduced to provide connectivity between portable devices like mobile phones, laptops, personal digital assistants (PDAs), and other nomadic devices up to a range of approximately 100 meters. Bluetooth-enabled devices operate in an unlicensed Instrumentation, Scientific, Medical (ISM) band at 2.4 GHz. This system uses frequency-hopping to enable the construction of low-power, low-cost radio devices with a small footprint. The Bluetooth-enabled devices transmit and receive on 79 different hop frequencies from 2402 to 2480 MHz, switching between one hop frequency to another in a pseudo-random sequence, 1600 times a second. The gross data rate is 1 Mb/s. A time-division duplex scheme is used for full-duplex transmission. In another example, a communication link **713** may be a widely available communication standard, such as the Infrared Data Association ("IrDA") specification and protocols. This wireless communication protocol provide low-cost, short-range, cross-platform, point-to-point communications at various transfer rates for devices employing the standardize protocol. There are various suppliers of compatible hardware for transceivers and interfacing software modules to implement for the battery charger assembly **304** and inductive power source **302**.

[0056] An example charging system **800** is illustrated in **FIG. 8**. Charging system **800** components may include an inductive charging source **802** that wirelessly provides electrical power to a battery charger assembly **302** attach a battery pack **305**. It should be noted that any or all of the features, subsystems, and functions of inductive charging source **302** and **702** may be included in the inductive charging source **802**. As shown in **FIG. 8**, a battery charger assembly **302** may placed on a work surface **803** of a table **805**. The battery pack **350** may be physically and electrically collected to the battery charger assembly **302**. The work surface may have top surface and a bottom surface. In one arrangement, the inductive charging source **302** can be physically mounted underneath the work surface **803** on the bottom surface. Alternatively, the inductive charging source **802** may be disposed inside the work surface **803** so that the source **802** is generally recessed therein, e.g., slightly underneath the top surface. This configuration allows the source **302** to be located at a short distance from the battery pack for maximum efficiency of energy transfer and inductive coupling. Nevertheless, multiple charging sources can be provided on or with the work surface. This allows for multiple mobile devices to be charged in the same location. Nonetheless, the inductive charging source **302** may be placed on the top surface instead of being embedded.

[0057] Referring to **FIG. 3**, in one alternative arrangement, inductive power source **302** may operate in a networked environment using logical connections to one or more computers **100** or remote computers, such as a remote computer **109** shown in **FIG. 1**. Various aspects of the present invention may at least be described in the general context of apparatus and computer-executable instructions, such as program modules, executed by one or more computers or other devices. Accordingly, it may be helpful to briefly discuss the components and operation of a general

purpose computing environment on which various aspects of the present invention may be implemented.

[0058] Accordingly, **FIG. 1** illustrates a schematic diagram of an illustrative general-purpose digital computing environment that may be used to implement various aspects of the present invention. In **FIG. 1**, a computer **100** includes a processing unit **110**, a system memory **120**, and a system bus **130** that couples various system components including the system memory to the processing unit **110**. The system bus **130** may be any of several types of bus structures including a memory bus or memory controller, a peripheral bus, and a local bus using any of a variety of bus architectures. The system memory **120** includes read only memory (ROM) **140** and random access memory (RAM) **150**.

[0059] A basic input/output system **160** (BIOS), containing the basic routines that help to transfer information between elements within the computer **100**, such as during start-up, is stored in the ROM **140**. The computer **100** also includes a hard disk drive **170** for reading from and writing to a hard disk (not shown), a magnetic disk drive **180** for reading from or writing to a removable magnetic disk **190**, and an optical disk drive **191** for reading from or writing to a removable optical disk **192**, such as a CD ROM or other optical media. The hard disk drive **170**, magnetic disk drive **180**, and optical disk drive **191** are connected to the system bus **130** by a hard disk drive interface **192**, a magnetic disk drive interface **193**, and an optical disk drive interface **194**, respectively. The drives and their associated computer-readable media provide nonvolatile storage of computer readable instructions, data structures, program modules, and other data for the personal computer **100**. It will be appreciated by those skilled in the art that other types of computer readable media that may store data that is accessible by a computer, such as magnetic cassettes, flash memory cards, digital video disks, Bernoulli cartridges, compact flash cards, smart media, random access memories (RAMs), read only memories (ROMs), and the like, may also be used in the example operating environment.

[0060] A number of program modules may be stored on the hard disk drive **170**, magnetic disk **190**, optical disk **192**, ROM **140**, or RAM **150**, including an operating system **195**, one or more application programs **196**, other program modules **197**, and program data **198**. A user may enter commands and information into the computer **100** through input devices, such as a keyboard **101** and a pointing device **102**. Other input devices (not shown) may include a microphone, joystick, game pad, satellite dish, scanner, or the like. These and other input devices often are connected to the processing unit **110** through a serial port interface **106** that is coupled to the system bus **130**, but may be connected by other interfaces, such as a parallel port, game port, or a universal serial bus (USB). Further still, these devices may be coupled directly to the system bus **130** via an appropriate interface (not shown). A monitor **107** or other type of display device is also connected to the system bus **130** via an interface, such as a video adapter **108**.

[0061] In addition to the monitor **107**, personal computers typically include other peripheral output devices (not shown), such as speakers and printers. As one example, a pen digitizer **165** and accompanying pen or user input device **166** are provided in order to digitally capture freehand input. The pen digitizer **165** may be coupled to the processing unit **110** via the serial port interface **106** and the system bus **130**, as shown in **FIG. 1**, or through any other suitable connection. Furthermore, although the digitizer **165** is shown apart from the monitor **107**, the usable input area of the digitizer **165** may be co-extensive with the display area of the monitor **107**. Further still, the digitizer **165** may be integrated in the monitor **107**, or may exist as a separate device overlaying or otherwise appended to the monitor **107**.

[0062] The computer **100** may operate in a networked environment using logical connections to one or more remote computers, such as a remote computer **109**. The remote computer **109** may be a server, a router, a network PC, a peer device, or other common network node, and typically includes many or all of the elements described above relative to the computer **100**, although only a memory storage device **111** with related applications programs **196** have been illustrated in **FIG. 1**. The logical connections depicted in **FIG. 1** include a local area network (LAN) **112** and a wide area network (WAN) **113**. Such networking environments are commonplace in offices, enterprise-wide computer networks, intranets, and the Internet.

[0063] When used in a LAN networking environment, the computer **100** is connected to the local network **112** through a network interface or adapter **114**. When used in a WAN networking environment, the personal computer **100** typically includes a modem **115** or other means for establishing a communications link over the wide area network **113**, e.g., to the Internet. The modem **115**, which may be internal or external, is connected to the system bus **130** via the serial port interface **106**. In a networked environment, program modules depicted relative to the personal computer **100**, or portions thereof, may be stored in a remote memory storage device. It will be appreciated that the network connections shown are exemplary and other techniques for establishing a communications link between the computers may be used. The existence of any of various well-known protocols such as TCP/IP, Ethernet, FTP, HTTP and the like is presumed, and the system may be operated in a client-server configuration to permit a user to retrieve web pages from a web-based server.

[0064] The computer **100** and remote computer **109** can be provided at a trusted entity. Thus, in a networked configuration, the inductive power source **302** is enabled to receive data associated with the battery charger assembly **304**, and transmit this data for trusted energy communications. For example, the remote computer **109** may be associated with a source entity that may retain data, such as battery charger ID numbers, serial numbers, manufacturer's names and date of manufactures of various battery charger assemblies. This information can be used for data integrity and security. Further, the source entity may include digital certificate information or a digital signature and transmit those items to the inductive power source **302** as requested. This data can be used as depicted in **FIG. 6** for authentication for trusted energy transfer arrangement.

[0065] Inductive charging arrangements provide user convenience by providing wireless power to mobile devices and communications devices. To maximize the flexibility, efficiency and/or safety of these inductive charging arrangements, communication between the source and the consuming device may be established to exchange various parameters and protocols. The communication may also

provide for authentication of devices that are allowed by the source to be charged and devices which may be placed in close proximity to the inductive power source. This prevents virus infections and effectively closes a backdoor for computer viruses. Thus, computer users do not need to carry power cables and AC power adapters with them. There is no need to search for an electrical plug location that may be in inconvenient places. The hazards related to power cords are eliminated. Thus, the mobile computing user may receive freedom of portable computing and protection from computer viruses which may attempt to infect the battery pack or charger assembly during data transmission or energy transfer. This particularly helpful because once a legacy battery pack is re-connected to a computer, viruses are prevented from being injected by the battery pack to the computer.

[**0066**] The foregoing detailed description has set forth various embodiments of the devices and/or processes via the use of block diagrams, flowcharts, and examples. Insofar as such block diagrams, flowcharts, and examples contain one or more functions and/or operations, it will be understood as notorious by those within the art that each function and/or operation within such block diagrams, flowcharts, or examples can be implemented, individually and/or collectively, by a wide range of hardware, software, firmware, or any combination thereof. In one embodiment, the aspects may be implemented via Application Specific Integrated Circuits (ASICs). Those, however, skilled in the art will recognize that the embodiments disclosed herein, in whole or in part, can be equivalently implemented in standard Integrated Circuits, as a computer program running on a computer, as a program running on a processor, as firmware, or as virtually any combination thereof and that designing the circuitry and/or writing the code for the software or firmware would be well within the skill of one of ordinary skill in the art in light of this disclosure.

[**0067**] Although the invention has been defined using the appended claims, these claims are exemplary in that the invention may be intended to include the elements and steps described herein in any combination or sub combination. Accordingly, there are any number of alternative combinations for defining the invention, which incorporate one or more elements from the specification, including the description, claims, and drawings, in various combinations or sub combinations. It will be apparent to those skilled in the relevant technology, in light of the present specification, that alternate combinations of aspects of the invention, either alone or in combination with one or more elements or steps defined herein, may be utilized as modifications or alterations of the invention or as part of the invention. It may be intended that the written description of the invention contained herein covers all such modifications and alterations.

What is claimed is:

1. An apparatus for transmitting inductive energy to a battery charger assembly in proximity thereof, the battery charger assembly including a microprocessor for processing data relevant to the inductive energy, the apparatus comprising:

a memory for storing computer readable instructions relevant to providing inductive energy to a battery charger assembly;

a processor unit operatively coupled to the memory;

a transmission element operatively coupled to the processor unit so as to provide the inductive energy to the battery charger assembly; and

a housing for enclosing the memory and processor unit therein.

2. The apparatus in accordance with claim 1, in which the memory includes authentication data for authenticating the battery charger assembly for the inductive energy transmission.

3. The apparatus in accordance with claim 1, further comprising a communications device for receiving and transmitting data and the communications device being operatively coupled to the transmission element.

4. The apparatus in accordance with claim 1, further comprising an antenna and a communications device configured to receive the computer readable instructions and configured to transmit the instructions to the antenna for wireless data communications to a battery charger assembly.

5. The apparatus in accordance with claim 1, in which the processor unit is configured to receive a plurality of power parameters from the battery charger assembly.

6. The apparatus in accordance with claim 1, in which the processor unit is configured to receive a digital security certificate from a battery charger assembly.

7. The apparatus in accordance with claim 1, further comprising a plurality of transmission elements responsive to receiving a transmission from a battery charger assembly.

8. An apparatus configured for receiving inductive energy, comprising:

a memory for storing computer readable data relevant to receiving the inductive energy;

a processor unit for processing the computer readable data;

a coil configured for receiving inductive energy;

a power supply operatively coupled to the processor unit and the coil; the power supply configured to output a direct current responsive to the inductive energy; and

a connector for operatively receiving a portion of a battery pack for logical communications with the processor unit.

9. The apparatus in accordance with claim 8, in which the processor unit is configured to provide authentication data for inductive energy reception.

10. The apparatus in accordance with claim 8, further comprising a communications device operatively coupled to the coil.

11. The apparatus in accordance with claim 10, in which the communications device is configured to receive the computer readable data and transmit the data to the coil.

12. The apparatus in accordance with claim 8, in which the processor unit is configured to receive a plurality of power parameters from the battery pack; store the power parameters in the memory; and transmit the power requirements to a power source which provides the inductive energy.

13. The apparatus in accordance with claim 8, in which the processor unit is configured to provide a digital certificate to a power source.

14. The apparatus in accordance with claim 8, in which the processor unit is configured to draw electrical power from the battery pack; and responsive to receiving an

indication of inductive energy at the coil; the processor unit configured to draw electrical power via the coil.

15. The apparatus in accordance with claim 9, further comprising an antenna and a communications device configured to receive the computer readable data and configured to transmit the data to the antenna for wireless data communications to a power source.

16. A computer implemented method of providing inductive energy to a battery charger assembly, the method comprising the steps of:

at the battery charger assembly, wirelessly receiving a polling message from a source;

transmitting a request for power to the source; and

receiving inductive power from the source.

17. The method in accordance with claim 16, in which the step of transmitting includes a step of transmitting a plurality of power parameters to the source.

18. The method in accordance with claim 16, in which the step of transmitting includes a step of transmitting authenticating data to the source.

19. The method in accordance with claim 16, further including a step of converting the inductive power to a direct current responsive to the step of receiving.

20. The method in accordance with claim 16, further including a step of receiving power parameters from a battery pack, and storing the power parameters in a computer readable memory.

21. The method in accordance with claim 20, in which the step of transmitting includes a step of transmitting the power parameters to the source.

22. A computer apparatus, comprising:

a processor; and

a memory for storing computer readable instructions that, when executed by said processor, cause the computer to perform the steps of:

receiving a polling message from a source;

transmitting a request for power to the source; and

providing an indication to a battery pack of receiving inductive power from the source.

23. The computer apparatus in accordance with claim 22, in which the step of transmitting includes a step of transmitting power parameters to the source.

24. The computer apparatus in accordance with claim 22, in which the step of transmitting includes a step of transmitting authenticating data to the source.

25. The computer apparatus in accordance with claim 22, in which the step of transmitting includes a step of transmitting authenticating data to the source.

26. The computer apparatus in accordance with claim 22, in further including a step of receiving computer readable power data from a battery pack.

27. The computer apparatus in accordance with claim 22, in further including a step, switching power state from battery power to inductive power, responsive to the step of providing an indication.

* * * * *