UNITED STATES PATENT AND TRADEMARK OFFICE

BEFORE THE PATENT TRIAL AND APPEAL BOARD

SAMSUNG ELECTRONICS CO., LTD.
Petitioner

v.

MOJO MOBILITY INC.
Patent Owner

Patent No. 11,292,349

PETITION FOR *INTER PARTES* REVIEW
OF U.S. PATENT NO. 11,292,349

TABLE OF CONTENTS

I. INTRODUCTION 1

II. MANDATORY NOTICES 1

III. PAYMENT OF FEES 2

IV. GROUNDS FOR STANDING 2

V. PRECISE RELIEF REQUESTED AND GROUNDS 2

VI. LEVEL OF ORDINARY SKILL 3

VII. THE '349 PATENT 4

VIII. CLAIM CONSTRUCTION 4

IX. DETAILED EXPLANATION OF GROUNDS 7

A. Ground 1: Claims 1, 5, 7, 10-12, and 26 are unpatentable as being obvious over *Fells* 7

1. Claims 1 and 26 7

2. Claim 5 64

3. Claim 7 65

4. Claim 10 68

5. Claim 11 69

6. Claim 12 70

B. Ground 2: Claim 4 is unpatentable as being obvious over *Fells* in view of *Jung* 76

1. Claim 4 76

C. Ground 3: Claims 1, 5, 7, 10-12, and 26 are unpatentable as being obvious over *Fells* in view of *Stoner* and *Nakamura* 86

D. Ground 4: Claim 4 is unpatentable as being obvious over *Fells* in view of *Stoner*, *Nakamura*, and *Jung* 88

X. DISCRETIONARY DENIAL IS NOT APPROPRIATE 90

XI. CONCLUSION 96

LIST OF EXHIBITS

Ex. 1001	U.S. Patent No. 11,292,349
Ex. 1002	Declaration of R. Jacob Baker, Ph.D., P.E.
Ex. 1003	Curriculum Vitae of R. Jacob Baker, Ph.D., P.E.
Ex. 1004	Prosecution History of U.S. Patent No. 11,292,349
Ex. 1005	U.S. Patent No. 8,587,154 ("*Fells*")
Ex. 1006	U.S. Patent No. 8,829,732 ("*Tengner*")
Ex. 1007	U.S. Patent No. 7,782,169 ("*Guenther*")
Ex. 1008	U.S. Patent Application Publication No. 2009/0267721 ("*Okada*")
Ex. 1009	DOE Fundamentals Handbook Electrical Science, FSC-6910, Vol. 1, DOE-HDBK-1011/1-92, U.S. Department of Energy, June 1992
Ex. 1010	U.S. Patent Application Publication No. 2005/0068019 ("*Nakamura*")
Ex. 1011	U.S. Patent No. 8,912,686 ("*Stoner*")
Ex. 1012	Physics, Henry Semat et al., Rinehart & Co., Inc., 1958, Chapters 29-32 ("*Semat*")
Ex. 1013	International Patent Application Publication No. WO2009155000A2 ("*Lin*")
Ex. 1014	U.S. Patent Application Publication No. 2008/0067874 ("*Tseng*")
Ex. 1015	U.S. Patent No. 9,356,473 ("*Ghovanloo*")
Ex. 1016	U.S. Patent No. 9,178,376 ("*Jung*")
Ex. 1017	U.S. Patent No. 8,830,036 ("*Park*")

Ex. 1018	TeckChuan Beh et al., Wireless Power Transfer System via Magnetic Resonant Coupling at Fixed Resonance Frequency—Power Transfer System Based on Impedance Matching—, 25th World Battery, Hybrid and Fuel Cell Electric Vehicle Symposium & Exhibition, Nov. 5-9, 2010 ("*Beh*")
Ex. 1019	RESERVED
Ex. 1020	U.S. Patent Application Publication No. 20140339916 ("*Fells-II*")
Ex. 1021	Mojo Mobility's Infringement Contentions in *Mojo Mobility Inc. v. Samsung Elecs. Co., Ltd.*, No. 2:22-cv-00398 (E.D. Tex.) (February 28, 2023)
Ex. 1022	Memorandum from Director Vidal (June 21, 2022)
Ex. 1023	Federal Court Management Statistics (December 2022)
Ex. 1024	Docket Control Order of March 28, 2023, *Mojo Mobility Inc. v. Samsung Elecs. Co., Ltd.*, No. 2:22-cv-00398 (E.D. Tex.)
Ex. 1025	Mojo Mobility's Infringement Chart for U.S. Patent No. 11,292,349 (Ex. 6) accompanying Mojo Mobility's Infringement Contentions in *Mojo Mobility Inc. v. Samsung Elecs. Co., Ltd.*, No. 2:22-cv-00398 (E.D. Tex.) (February 28, 2023)
Ex. 1026	Watson, J., Mastering Electronics, Third Ed., McGraw-Hill, Inc. (1990)
Ex. 1027	Sedra *et al*, Microelectronic Circuits, Fourth Ed., Oxford University Press (1998)
Ex. 1028	GB Patent Application Publication No. 2202414 ("*Logan*")
Ex. 1029	U.S. Patent No. 7,226,442 ("*Sheppard*")
Ex. 1030	International Patent Application Publication No. WO1996040367 ("*WangII*")
Ex. 1031	U.S. Patent No. 6,960,968 ("*Odendaal*")

Ex. 1032	U.S. Patent No. 6,489,745 ("*Koreis*")
Ex. 1033	U.S. Patent Application Publication No. 2004/0201988 ("*Allen*")
Ex. 1034	International Patent Application Publication No. WO2003/096361 ("*Cheng*")
Ex. 1035	U.S. Patent No. 6,366,817 ("*Kung*")
Ex. 1036	AN710 Antenna Circuit Design for RFID Applications
Ex. 1037	Spiral Inductor Design for Quality Factor, Sang-Gug Lee et al., Journal of Semiconductor Technology and Science, Vol. 2. No. 1, March 2002 ("*Lee*")
Ex. 1038	U.S. Patent No. 4,942,352 ("*Sano*")
Ex. 1039	U.S. Patent Application Publication No. 2006/0202665 ("*Hsu*")
Ex. 1040	International Patent Application Publication No. WO2004/038888 ("*ChengII*")
Ex. 1041	U.S. Patent Application Publication No. 2005/0127868 ("*Calhoon*")
Ex. 1042	U.S. Patent Application Publication No. 2006/0145660A1 ("*Black*")
Ex. 1043	U.S. Patent No. 5,780,992 ("*Beard-1*")
Ex. 1044	U.S. Patent No. 6,912,137 ("*Berghegger*")
Ex. 1045	U.S. Patent No. 7,378,817 ("*CalhoonII*")
Ex. 1046	U.S. Patent No. 6,606,247 ("*Credelle*")
Ex. 1047	U.S. Patent Application Publication No. 2001/0055207 ("*Barbeau*")

I. INTRODUCTION

Samsung Electronics Co., Ltd. ("Petitioner") requests *inter partes* review of claims 1, 4-5, 7, 10-12, and 26 ("challenged claims") of U.S. Patent No. 11,292,349 ("the '349 patent") (Ex. 1001) assigned to Mojo Mobility Inc. ("PO"). For the reasons below, each challenged claim should be found unpatentable and canceled.

II. MANDATORY NOTICES

Real Parties-in-Interest: Petitioner identifies the following as the real parties-in-interest: Samsung Electronics Co., Ltd., and Samsung Electronics America, Inc.

Related Matters: The '349 patent is at issue in the following matter(s):

- *Mojo Mobility Inc. v. Samsung Electronics Co., Ltd.*, No. 1-22-cv-00398 (E.D. Tx.) (asserting the '349 patent and also U.S Patent Nos. 7,948,208, 9,577,440, 11,316,371, 11,201,500, 11,342,777, and 11,462,942) ("Texas Litigation").
- Petitioner is filing concurrently herewith a petition for *inter partes* review challenging other claims of the '349 patent.

The '349 patent issued from Application No. 17/467,032 (now U.S. Patent No. 11,114,886), which is a continuation of Application No. 15,830,411 (now U.S. Patent No. 10,594,155), which is a continuation of Application No. 14/252,627 (now

U.S. Patent No. 9,837,846), and claims priority to U.S. Provisional Application No. 61/811,638 (filed April 12, 2013). (Ex. 1001, Cover.)

Counsel and Service Information: Lead counsel: Joseph E. Palys (Reg. No. 46,508), and Backup counsel are (1) Naveen Modi (Reg. No. 46,224) and (2) David Valente (Reg. No. 76,287). Service information is Paul Hastings LLP, 2050 M St., Washington, D.C., 20036, Tel.: 202.551.1700, Fax: 202.551.1705, email: PH-Samsung-MojoMobility-IPR@paulhastings.com. Petitioner consents to electronic service.

III. PAYMENT OF FEES

The PTO is authorized to charge any fees due during this proceeding to Deposit Account No. 50-2613.

IV. GROUNDS FOR STANDING

Petitioner certifies that the ’349 patent is available for review and Petitioner is not barred or estopped from requesting review on the grounds identified herein.

V. PRECISE RELIEF REQUESTED AND GROUNDS

The challenged claims should be canceled as unpatentable based on the following grounds:

Ground 1: Claims 1, 5, 7, 10-12, and 26 are unpatentable under AIA 35 U.S.C. § 103 as being obvious over *Fells*;

Ground 2: Claim 4 is unpatentable under AIA 35 U.S.C. § 103 as being obvious over *Fells* in view of *Jung*;

Ground 3: Claims 1, 5, 7, 10-12, and 26 are unpatentable under AIA 35 U.S.C. § 103 as being obvious over *Fells* in view of *Stoner* and *Nakamura*; and

Ground 4: Claim 4 is unpatentable under AIA 35 U.S.C. § 103 as being obvious over *Fells*, *Stoner, Nakamura,* and *Jung*.

The '349 patent claims priority via a provisional application dating back to April 12, 2013. (§II.) For purposes of this proceeding, and without conceding the '349 patent is entitled to such a date, Petitioner assumes the effective date for the challenged claims is April 12, 2013.

Fells was filed 8/28/2008, *Jung* was filed 2/24/2010, and *Stoner* was filed 11/1/2011, and thus each qualifies as prior art at least under AIA 35 U.S.C. §102(a)(2). *Nakamura* published 3/31/2005 (filed 9/23/2004), and thus qualifies as prior art under AIA 35 U.S.C. §§102(a)(1), 102(a)(2). *Nakamura* was submitted in an IDS during prosecution, but none of the other references were considered during prosecution. (*See generally* Ex. 1004; §§VII, X.)

VI. LEVEL OF ORDINARY SKILL

A person of ordinary skill in the art as of the claimed priority date of the '349 patent ("POSITA") would have had at least a master's degree in electrical engineering, or a similar discipline, and two or more years of experience with

wireless charging systems, including, for example, inductive power transfer systems.[1] (Ex. 1002, ¶¶20-21.)[2] More education can supplement practical experience and vice versa. (*Id.*)

VII. THE '349 PATENT

The '349 patent generally relates to a system/method for enabling inductive transfer of power from a charger/power supply to one or more receivers. (Ex. 1001, 1:53-56, 2:8-12; 2:13-33, Abstract.) During prosecution, the Examiner allowed the claims without any rejections, indicating that the recited combination of elements/operations was not taught/suggested in the prior art. (Ex. 1004, 113-114.) However, as demonstrated below, the claimed features are compilations of known technologies/techniques disclosed/suggested in the prior art asserted herein. (*Infra* §IX; Ex. 1002, ¶¶22-252; Exs. 1005-1018, 1026-1047.)

VIII. CLAIM CONSTRUCTION

The Board only construes the claims when necessary to resolve the underlying controversy. *Toyota Motor Corp. v. Cellport Systems, Inc.*, IPR2015-00633, Paper

---

[1] Petitioner disagrees the applicant's limited/vague POSITA definition given during prosecution. (Ex. 1004, 124.)

[2] Petitioner submits the declaration of R. Jacob Baker, Ph.D., P.E. (Ex. 1002), an expert in the field of the '349 patent. (Ex. 1002, ¶¶5-13; Ex. 1003.)

No. 11 at 16 (Aug. 14, 2015). For purposes of this proceeding, Petitioner believes that no special constructions of the claim terms, other than the term identified below, are necessary to assess whether the challenged claims are unpatentable over the asserted prior art.[3]

Claim limitations 1(k) and 26(e) recite a "**means for positioning [the/a] receiver in a power transfer position, [which is] proximate to the charger surface, to inductively transfer power to the receiver [of the first mobile device]**." (Ex. 1001, 23:49-52, 26:6-8.) Lacking any language that provides sufficient definite meaning as the name for structure, the term should be construed

[3] Petitioner reserves all rights to raise claim construction and other arguments, including challenges under 35 U.S.C. §112, in district court as relevant to those proceedings. *See, e.g.*, *Target Corp. v. Proxicom Wireless, LLC*, IPR2020-00904, Paper 11 at 11–13 (Nov. 10, 2020). A comparison of the claims to any accused products in litigation may raise controversies that are not presented here given the similarities between the references and the patent. Petitioner does not concede the claims are definite, have specification support, are enabled, etc., and thus reserves the right to address any associated §112 issues in other proceedings.

as a means-plus-function term. *Williamson v. Citrix Online, LLC*, 792 F.3d 1339, 1347-49 (Fed. Cir. 2015).

The identified function is the **underlined** text above. (*Supra*.) (Ex. 1002, ¶60.) The corresponding structure encompasses that described in the specification and dependent claims 24-25 and/or equivalents thereof. (Ex. 1001, 14:35-38 ("[T]he charger and or receiver can include means to provide more precise alignment between the charger and receiver coils or antennas. These can include **visual, physical, or magnetic means** *to assist the user in alignment of parts*.")[4], 25:56-57-63 (claim 24: "the means for position includes **one or more magnets** to position the receiver in the power transfer position", claim 25: "means for positioning includes one or more members of a group consistent of **visual, physical, or magnetic means** to assist in the positioning the receiver in the power transfer position.").)[5] (Ex. 1002, ¶60.)

[4] Emphasis is added herein unless indicated otherwise.

[5] *See supra* n.3.

IX. DETAILED EXPLANATION OF GROUNDS

A. Ground 1: Claims 1, 5, 7, 10-12, and 26 are unpatentable as being obvious over *Fells*

1. Claims 1 and 26[6]

a) 1(a): A system for inductive power transfer comprising:

To the extent limiting, *Fells* discloses this limitation. (Ex. 1002, ¶¶91-98.) For example, *Fells* discloses "an ***inductive power transfer system*** including a primary unit and a secondary device," where the primary unit includes a "power transfer surface" and "field generators" (e.g., primary coils) and where the secondary device (which can be a mobile device) includes a "power receiver having a secondary coil." (Ex. 1005, Abstract.) As further demonstrated below for this claim, *Fells* describes various configurations of such a power transfer system including such components (e.g., primary unit with a surface, primary coils (e.g., field generators, cells, coils), mobile device (e.g., mobile phone, etc.) with a receiver (including secondary coil (solenoid with magnetic core and wires)), and related circuitry) that reflect such a system. (*See* §§IX.A.1(b)-(q); (Ex. 1005, Abstract,

[6] Claim 26 recites similar limitations as claim 1 (reciting a "system" comprising a "charger"), but from the perspective of a "charger." The limitations of claim 26 are highlighted in blue in the section headings.

FIGS. 1-8, 16-20, 22-23 (some shown below), 1:3-6:3, 6:56-8:9, 10:26-11:8, 11:26-12:19.) (*See also id.*, FIGS. 9-15, 21, 24-27, 8:10-10:25, 11:9-25, 13:26-22:35; Ex. 1002, ¶¶92-93.)

Fig. 2

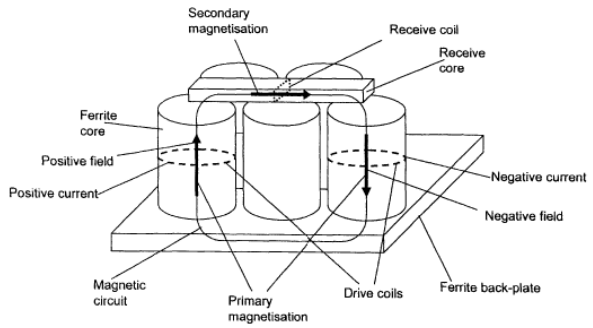

Fig. 8

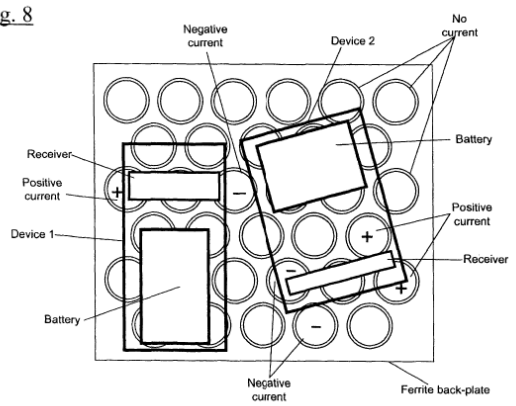

Fig. 5

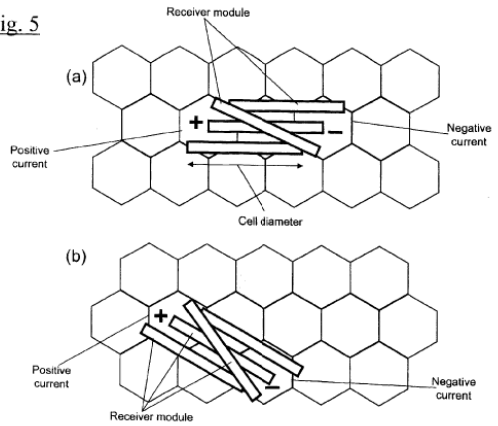

Fig. 18

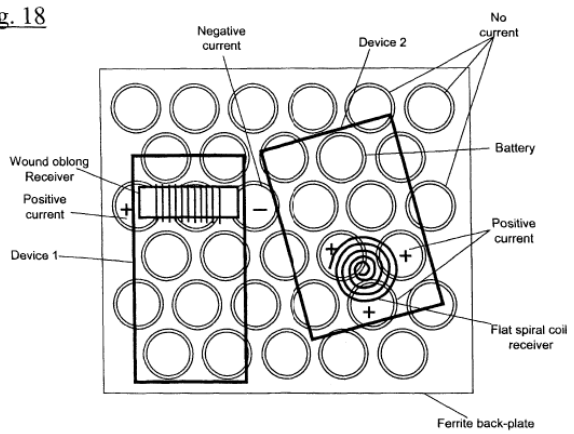

Fig. 16

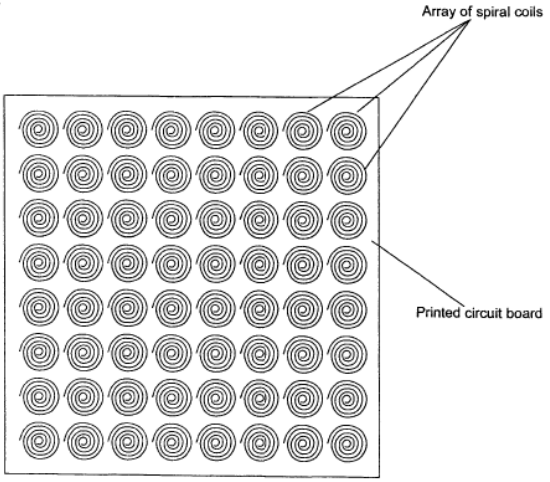

Fig. 17

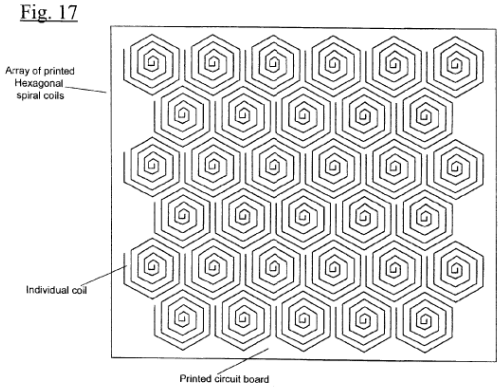

Fig. 23

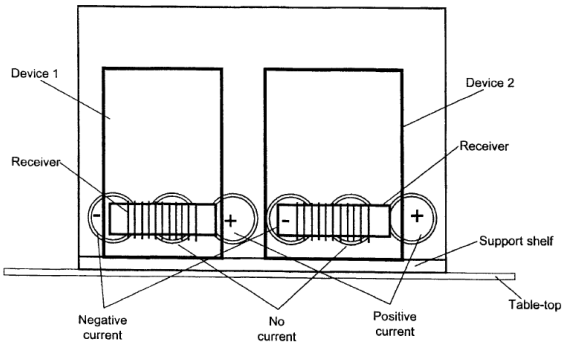

A POSITA would have understood that the various arrangements, materials, configurations, etc. described in connection with the exemplary figures are related to a "system" like that claimed. (Ex. 1002, ¶94.) While some of *Fells'* embodiments include features not applied to the claim limitations herein, disclosures associated with those embodiments include teachings/suggestions applicable to a "system" like that claimed, especially in context of the modified *Fells* system as explained below. (§§IX.A.1(b)-(q).) For instance, while FIG. 2 (above) includes non-planar charging coils, the disclosure related to how magnetic field is generated and flows

in a magnetic circuit formed by activated primary coils and the mobile device's receiver (with secondary coil) is applicable to the other configurations (e.g., a system with planar charging coils) discussed by *Fells*. (*See e.g.*, Ex. 1005, Fig. 2, 7:9-24 (discussing the "magnetic circuit" formed), 10:26-34 (discussing the "magnetic circuit" for planar PCB coils in FIG. 16).) Thus a POSITA would have understood that *Fells*' system is described as versatile in configuration, where different arrangements/features are described to be related to each other (where applicable). (Ex. 1002, ¶¶ 95-98.) Consequently, the "system" disclosed by *Fells* includes any of the "system" configurations that encompass components and features that track the features recited in claims 1 and 26. (*Id.*; *e.g.*, Ex. 1005, 1:41-6:3, 12:9-22:32; *infra*, §§IX.A.1(b)-(q).)

b) <u>1(b):</u> a charger, wherein the charger is an inductive charger, and the charger includes:

<u>26(a):</u> A charger for inductive charging, the charger comprising:

Fells discloses this limitation. (Ex. 1002, ¶¶99-103.) As explained, *Fells*' "**inductive power transfer**" "**system**" includes a primary unit ("**charger**") that transfers power to the secondary (mobile) device via electromagnetic induction. (§IX.A.1(a); *see also e.g.,* Ex. 1005, FIGS. 9, 13, 26, Abstract, 2:28-33, 6:9-14 ("system for transferring power from a ***charger*** to a portable device"), 6:15-52

("charger"), 6:57-7:21, 7:25-42, 8:1-9 (multiple devices simultaneously charged), 8:10-9:63; 13:53-14:14; Ex. 1002, ¶¶100; §§IX.A.1(c)-(q).)

Fig. 9

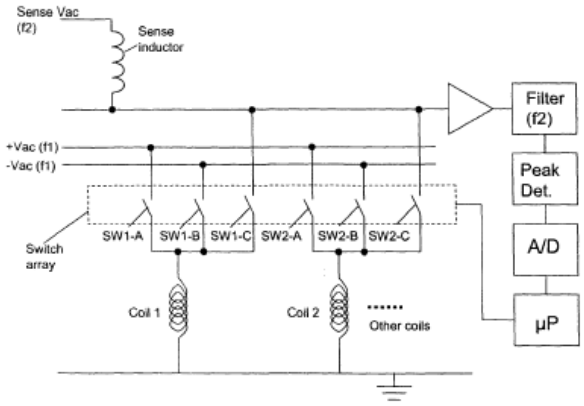

Fig. 13

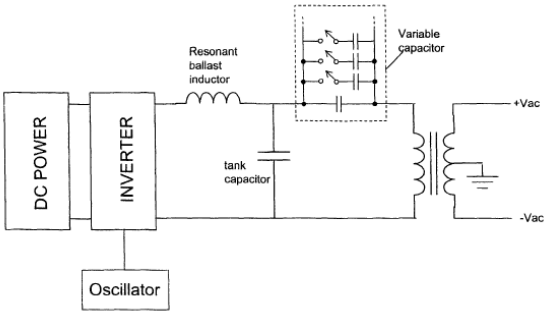

Fells discloses a "**charger**" by a portion of the primary unit including one or more of the charging coil(s) and associated circuitry/components discussed herein. (Ex. 1002, ¶¶101-103.) As one example, a "charger" is exemplified in FIG. 23 (annotated below) by the charging coils on left-side (red) or right-side (blue) of the unit (and associated circuitry/components discussed above and below (§§IX.A.1(a)-(q)).[7] (*See also* §§IX.A.1(c)-(q).)

[7] The highlighted portions in annotated FIG. 23 are exemplary and not intended to be limiting in terms of precise boundaries or schematic of the "charger" mapped to *Fells*. Other configurations in *Fells*' likewise describes a "charger" as claimed.

Fig. 23

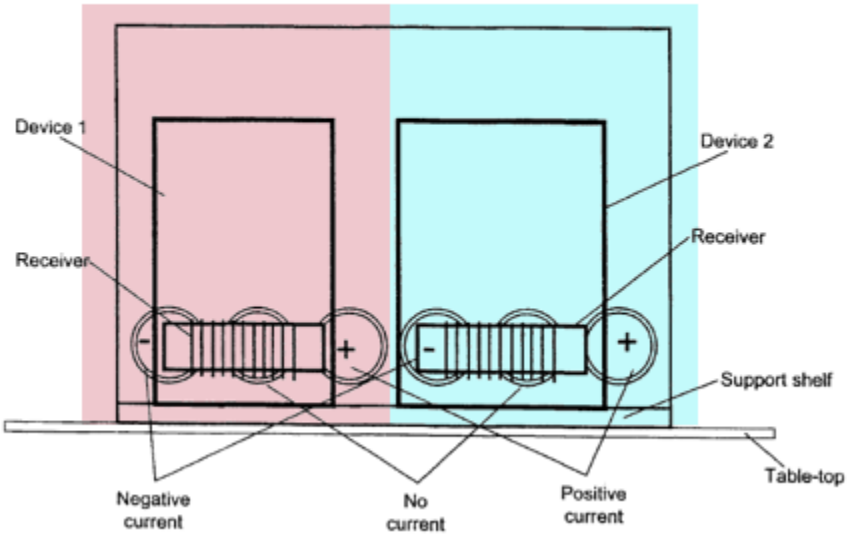

c) 1(c)/26(b): a printed circuit board having a charger coil, wherein the charger coil has a substantially planar charger surface;

Fells discloses this limitation. (Ex. 1002, ¶¶104-106; §§IX.A.1(a)-(b).) *Fells*' "charger" can include one or more planar primary coils ("**charger coil** [having] **a substantially planar charger surface**") on a "**printed circuit board**" (PCB). For example, the charger can be formed "using a ***PCB*** implementation" where "an array of ***planar spiral coils*** [are] used to generate the vertical fields." (Ex. 1005, 10:26-28; *id.*, 10:28-37, FIGS. 16-17 (annotated below); FIG. 23, 11:45-64 ("[o]ther planar coil technologies such as PCB coils…can be used…"), Claim 1 ("primary unit comprising: a power transfer *surface* capable of enabling inductive coupling with said secondary device…"); Ex. 1002, ¶¶105-106; §§IX.A.1(a)-(b), IX.A.1(d)-(q).)

Fig. 16

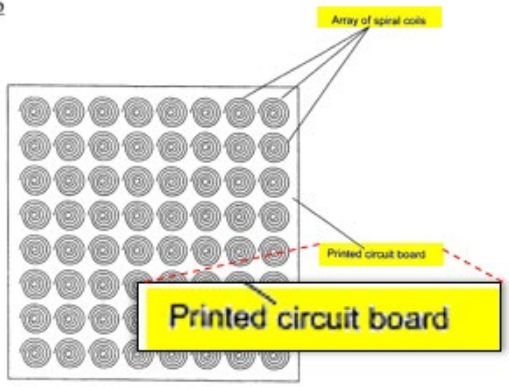

Fig. 17

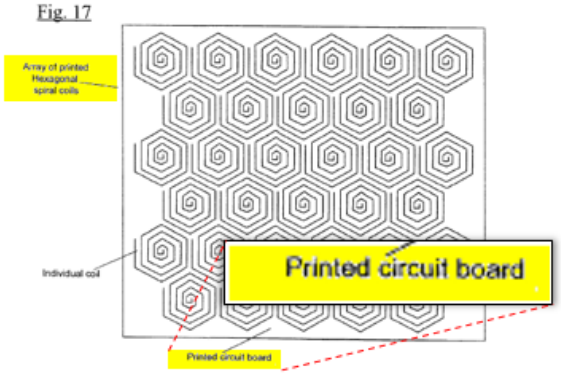

d) 1(d)/26(c): a substantially planar magnetic layer under the charger coil opposite the charger surface; and,

Fells discloses this limitation. (Ex. 1002, ¶¶107-109; §§IX.A.1(a)-(c).) The "charger" can include a ferrite backplate ("**substantially planar magnetic layer**") under the primary coil(s) ("**charger coil(s)**") that is "**opposite the charger surface**" since it is positioned under the surface of the primary coil(s) that generate the magnetic field used to inductively transfer power. (Ex. 1005, 10:26-34 (PCB-planar spiral coil implemented charger of FIG. 16 where "[a] ***ferrite back plate*** would typically be required to complete the magnetic circuit"), 11:65-12:9 (discussing FIG. 23, where "[a] ferrite back-plate may be used behind the vertical cores to act as a flux return path, and this improves the coupling factor" and "[t]he permeable material from which the cores and/or back-plate are manufactured is preferably ***Mn-Zn ferrite, but other magnetic materials…could be used***"), 6:57-63 (discussing

FIG. 1(b) having array of coils around ferrite core that "are attached to a ***ferrite backplate***"), 7:9-21 (discussing FIG. 2 (below), where "the ***ferrite backplate***" forms a "magnetic circuit" with a first coil and receiver core), 8:26-32, FIG. 16, FIGS. 3, 8, 17-18; §IX.A.1(a); Ex. 1002, ¶108.)

Fig. 2

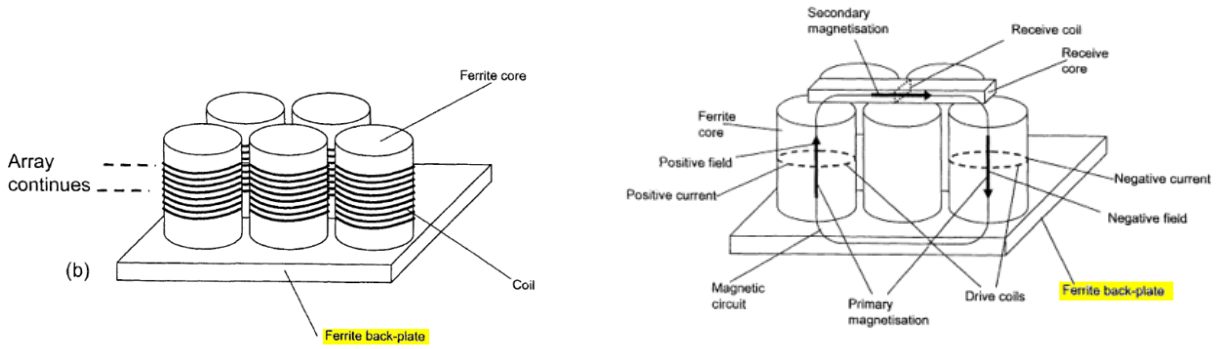

Thus, a POSITA would have understood the ferrite backplate implemented in the various applications of the charger in *Fells* is a magnetic layer that is "**substantially planar**" (as exemplified above) and is positioned "**under the charger coil(s)**" (*e.g.,* the primary/drive coil(s)) and "**opposite the surface of the charger**" (which in *Fells*, faces the secondary coil). (Ex. 1002, ¶109.) (*See* §§IX.A.1(e)-(q).)

e) 1(e)/26(d): a charger drive circuit, wherein the charger drive circuit includes a resonant capacitor and a FET switch to apply an alternating voltage to the charger coil; and

Fells discloses this limitation. (Ex. 1002, ¶¶110-124.) As explained, the system described by *Fells* can be configured in different ways for various

applications. (§§IX.A.1(a)-(d).) For example, regarding Figure 4 (below), *Fells* describes an exemplary relationship between a power receiver ("**mobile device**" (§IX.A.1(f))) and the charger coils. (Ex. 1005, 7:31-42.) (Ex. 1002, ¶¶111-114.)

Fig. 4

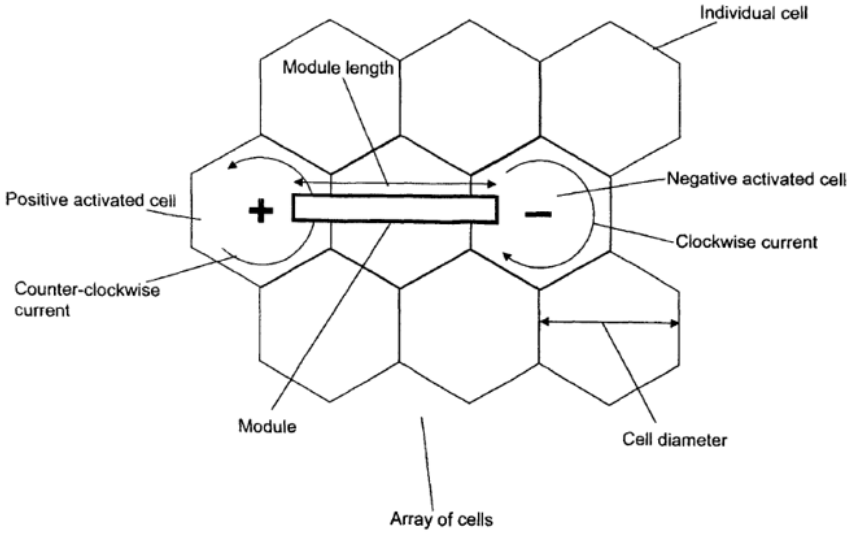

(Ex. 1005, FIG. 4.) The receiver can be powered by activating multiple coils even when placed in different positions. (*Id.*, 7:25-67.) FIG. 5 (below) shows examples of how two charging coils on the charging pad can power a receiver placed in different positions. (*Id.*, 7:43-49.)

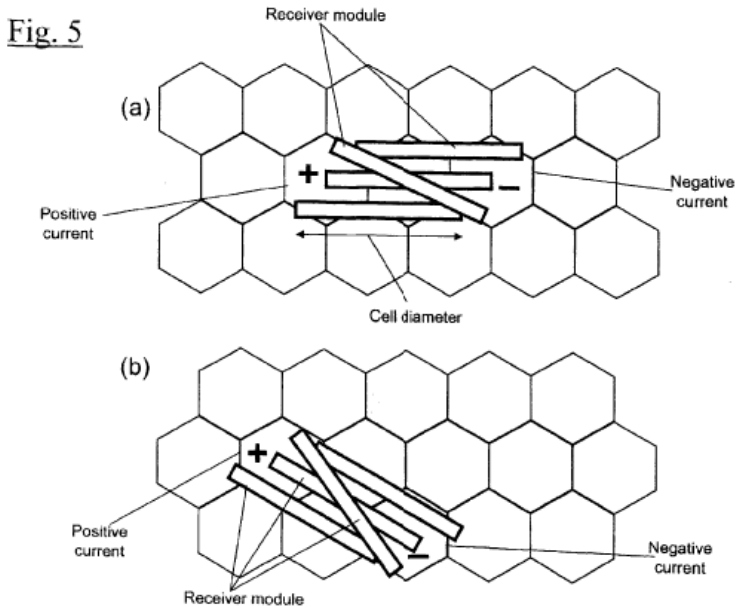

(Ex. 1005, FIG. 5.) FIGS. 6 and 7 (below) shows other examples of powering the receiver using two pairs or three pairs of charging coils, respectively. (*Id.*, 7:50-57.)

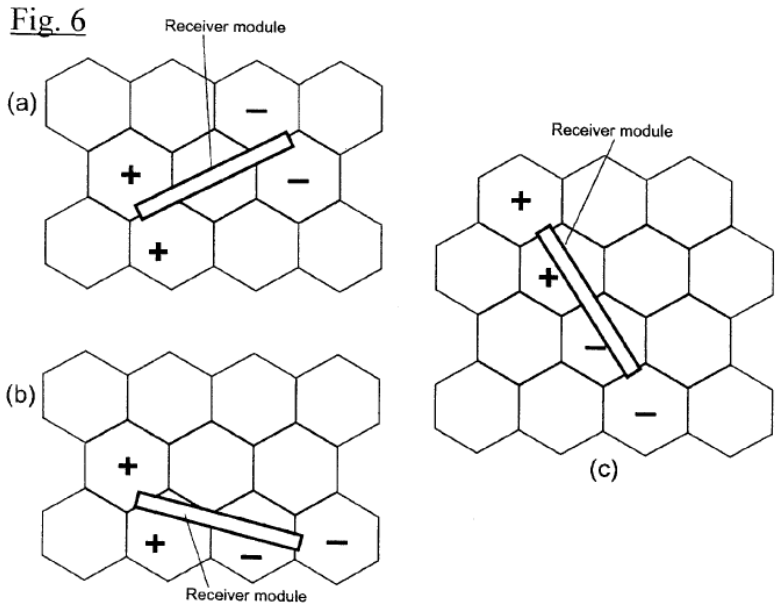

(*Id*., FIG. 6.)

Fig. 7

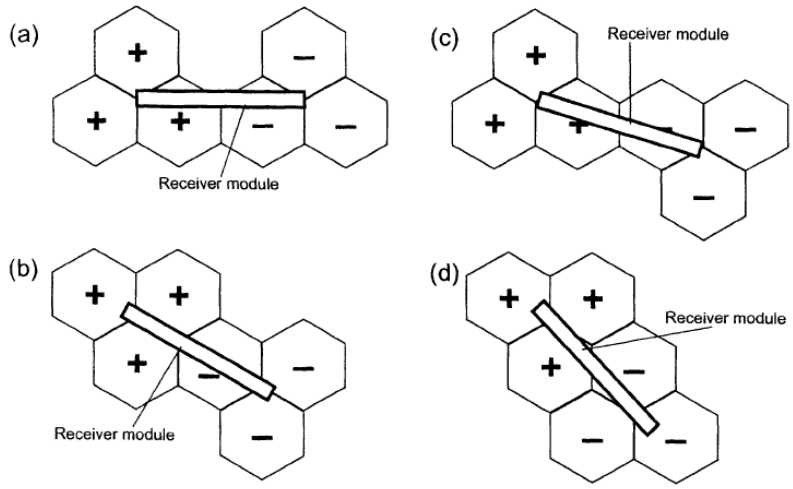

(*Id*., FIG. 7.)

The charging pad can be configured to accommodate "multiple devices to be charged simultaneously, as exemplified in FIG. 8 (below). (*Id.*, 8:1-9.)

Fig. 8

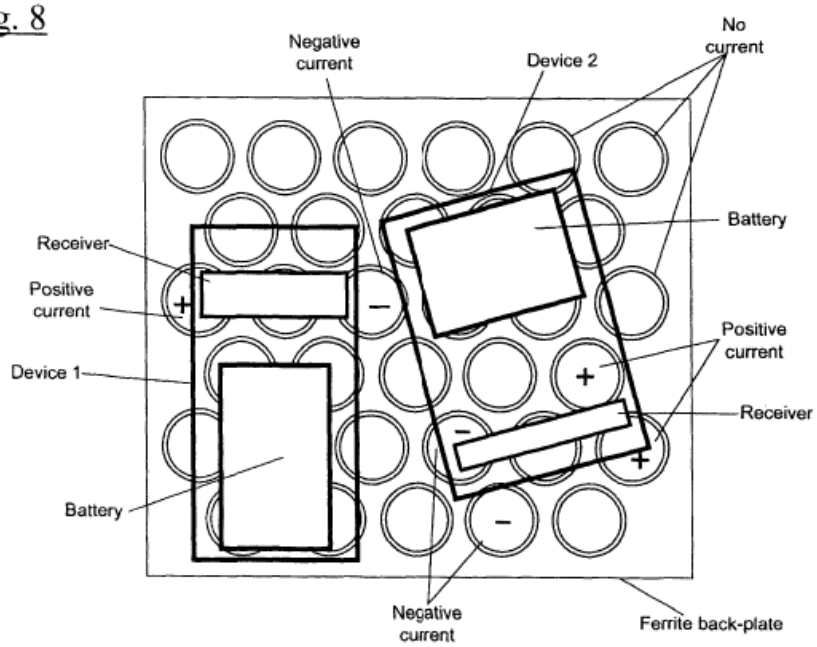

Regarding FIGS. 9 and 13 (below), *Fells* describes that the "charger" can include driver circuitry including components for sensing the position of the device coil and switching/activating appropriate primary coils (e.g., "coil 1, coil 2, etc.") on the charging pad (*id.*, 8:10-13). (*Id.*, 6:27, 31-32.) Such an arrangement requires AC voltage signals, and "FIG. 13 shows a means of generating these signals." (Ex. 1005, 9:46-48.) (Ex. 1002, ¶115.)

Fig. 9

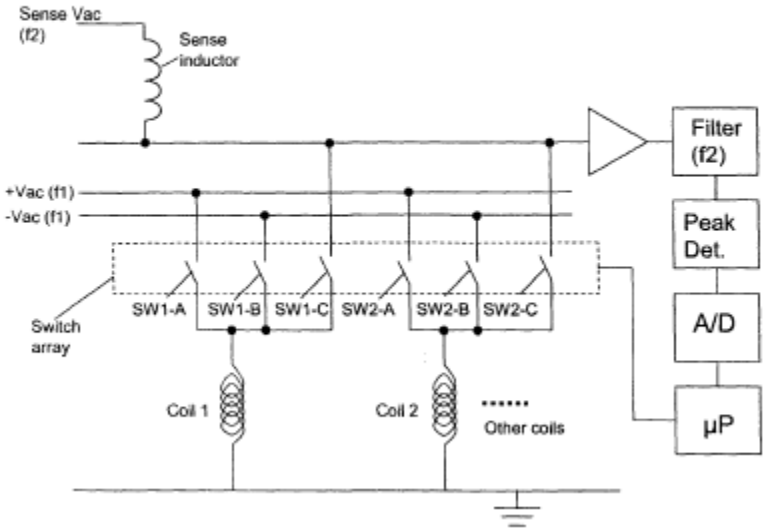

Fig. 13

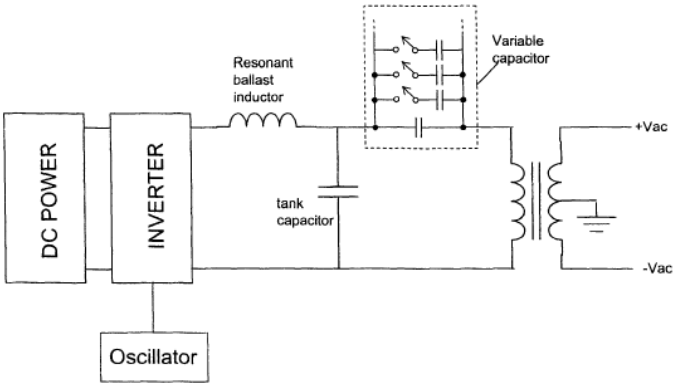

Each charger coil may be connected to switches (*e.g.*, SWx-A/SQx-B/SWx-C (FIG. 9)) controlled by a microprocessor. (*Id.*, 8:13-15.) Some switches (*e.g.*, SWx-A/SWx-B) "are ***used to drive the coil***" via connection to an alternating current supplied by an alternative supply +Vac/-Vac and another (SWx-C) is supplied with an alternating current source (Vac) and is used for sensing which coils are to be activated. (*Id.*, 8:15-20, 8:21-41.) FIG. 13 shows a "DC power source…coupled to an inverter to generate an AC signal at a reference oscillator frequency." (*Id.*, 9:46-63.) The inverter output is "coupled to an inductor and capacitor resonant at the oscillator frequency," which "in turn [is] coupled to a transformer, via a variable capacitor." (*Id.*) "The two ends of the transformer output provide the positive and negative polarity inputs to the circuit of FIG.9." (*Id.*) The microprocessor can execute an algorithm to determine which coils should be activated to ensure appropriate coils are driven when needed, and to ensure devices on the charger that do not require power (e.g., fully charged) are switched off. (*Id.*, 8:57-9:16, 9:17-45, 11:26-44 ("drive pairs of coils in the charger," "'drivers' switched off"); *id.*, 12:60-13:22, FIG. 23.) (Ex. 1002, ¶¶116-118.)

Fells explains alternative arrangements can be used "for providing the power for the coils and switching this power to the required coils." (Ex. 1005, 13:23-25; *id.*, 13:26-14:35, FIGS. 24-27, 14:36-22:32.) FIG. 26 shows a configuration "for

driving multiple devices" that may have "different power requirements." (*Id.*, 13:53-55.)

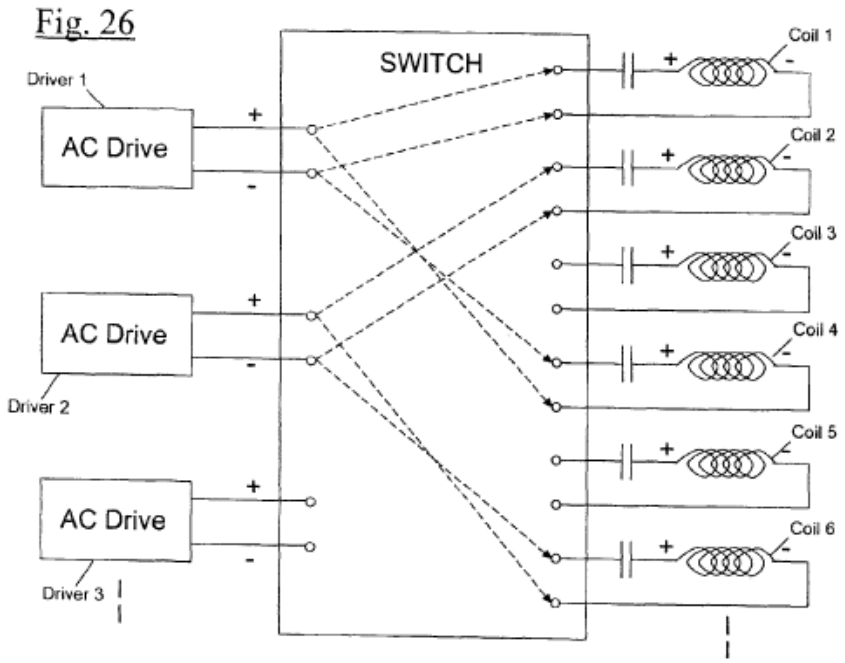

Similar to the FIG. 9, 13 arrangement, switches connected to AC drivers can be "used to drive a pair of coils" (positive and negative polarities). (*Id.*, 13:55-14:15.) The drivers may connect to more than one pair of coils, and can use separate/dual sources ("for example ***as in FIG. 13*** or 24"). (*Id.*, 14:5-14.) "A ***resonant capacitor*** may be placed at either the driver side or the coil side of the switch." (*Id.*, 13:57-59.) Different types of switches can be used, including "**FET**" switches. (*Id.*, 14:32-35 ("[s]witches can be constructed from ***FETs***...or other electronic switches well-known to those skilled in the art"), 9:42-56 ("**MOSFET**

switches"), 12:66-13:13.) *Fells*' teachings are consistent with known use of resonant circuits in charging devices. (Ex. 1002, ¶¶119-130; Ex. 1011, FIG. 1, 7:3-9.)

Thus, *Fells* discloses a "**charger**" including driving circuitry ("**charger drive circuit**") that includes "**FET**" switch(es) and a "**resonant capacitor**" (*e.g.*, positioned before/after the switch) that "**apply an alternating voltage**" to selected "**charger coil(s)**," as claimed. (Ex. 1002, ¶131; *see also* §§IX.A.1(f)-(q).)

f) 1(f): a first mobile device that includes a receiver to inductively receive power for the first mobile device, wherein the receiver includes:

26(e): … a receiver …, wherein the receiver is included in a mobile device to inductively receive power for the mobile device, and the receiver includes:

Fells discloses this limitation. (Ex. 1002, ¶¶125-131.) As explained, *Fells'* system inductively charges a mobile device via a power receiver in the device. (§§IX.A.1(a)-(e); Ex. 1005, FIGS. 1-2, 5-8, 18-23 (some shown below), 1:3-16, 6:57-60 ("FIG. 1(a) shows a power receiver suitable for embedding in a portable device"), 6:25-26 ("FIG. 8 shows portable devices being charged…"), 7:9-21, 8:1-9, 10:38-67, 11:15-21, 11:45-55, 12:60-65.) The mobile device's "**receiver**" inductively receives power from the charger coils like that claimed. (§§IX.A.1(a)-(e); Ex. 1002, ¶¶126-131; *see also* §§IX.A.1(g)-(q).)

Fig. 1

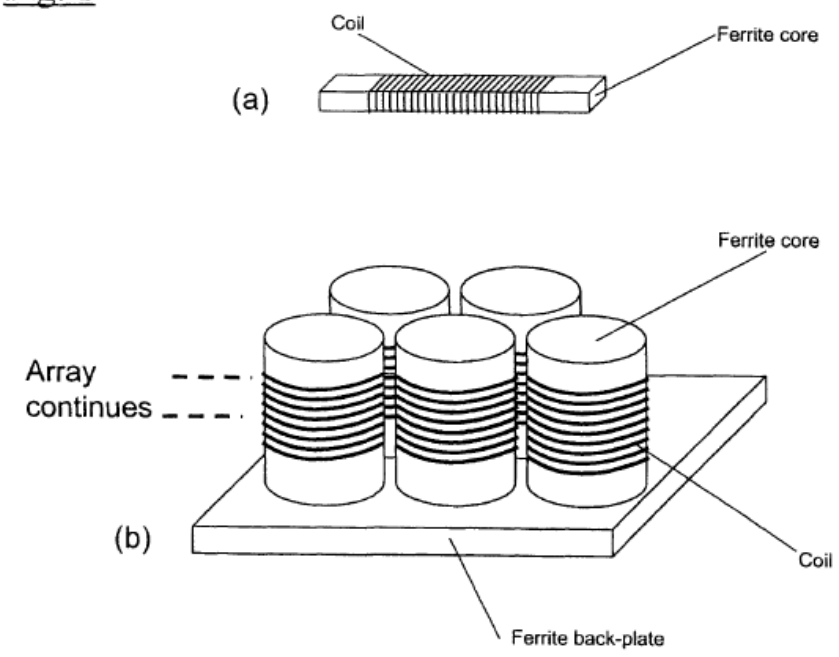
Coil
Ferrite core
(a)
Ferrite core
Array
continues
(b)
Coil
Ferrite back-plate

Fig. 8

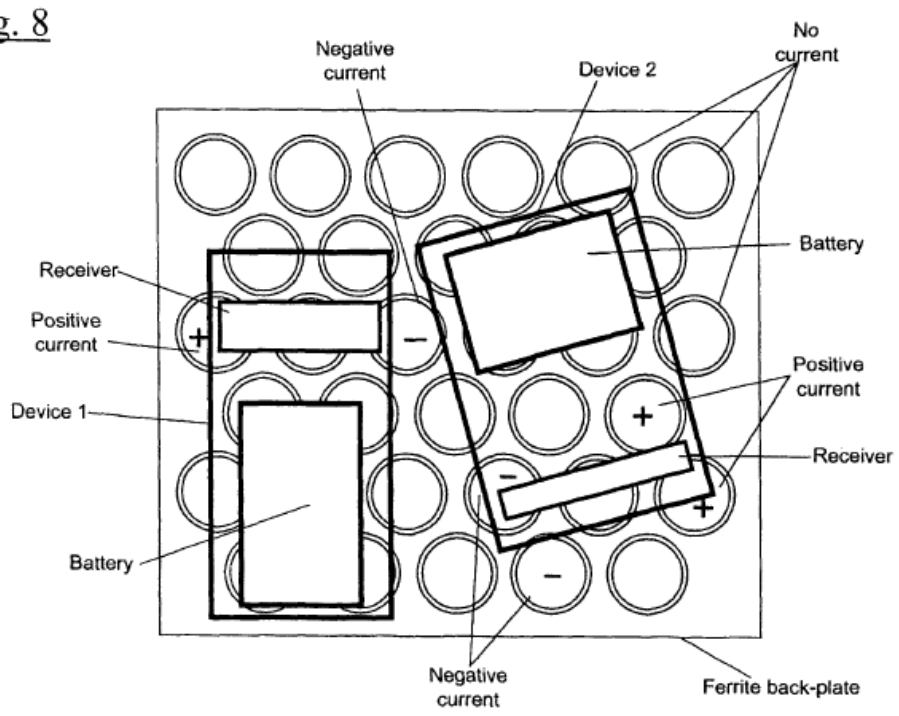
Negative
current
Device 2
No
current
Battery
Receiver
Positive
current
Device 1
Positive
current
Receiver
Battery
Negative
current
Ferrite back-plate

Fig. 18

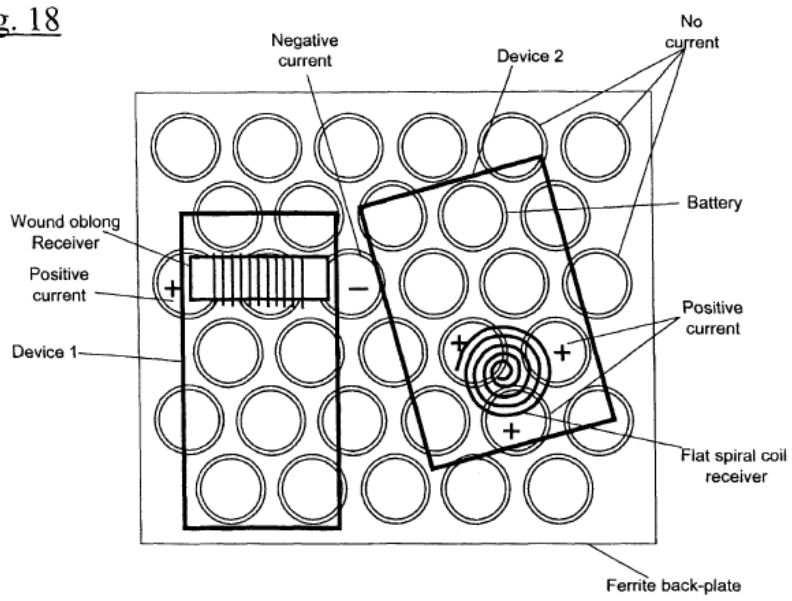
Negative current
Device 2
No current
Battery
Wound oblong Receiver
Positive current
Device 1
Positive current
Flat spiral coil receiver
Ferrite back-plate

Fig. 19

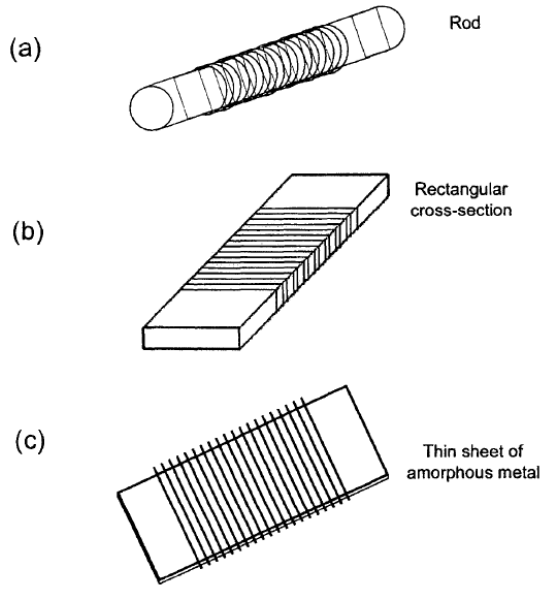
(a)
Rod
(b)
Rectangular cross-section
(c)
Thin sheet of amorphous metal

Fig. 23

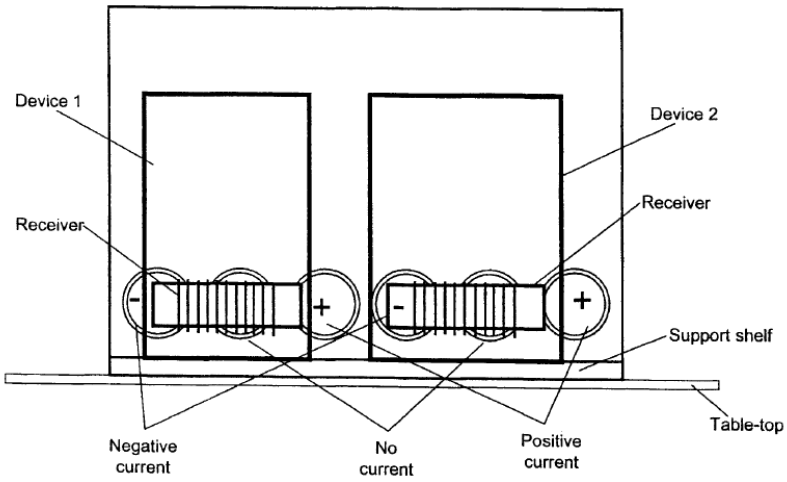

g) 1(g)/26(f): a solenoid, wherein the solenoid includes:

Fells discloses this limitation. (Ex. 1002, ¶¶132-139; §§IX.A.1(a)-(f).) The '349 patent describes a receiver "solenoid" in non-limiting ways. For example, "a receiver coil can be generally shaped as a ***blade or thin solenoid***." (Ex. 1001, 2:30-31.) (*See also id.*, 2:54-55, 8:63-65 ("As shown 172 in FIG. 7, Litz wire can be wrapped around the core to create a solenoid type receiver…"), FIG. 7 (below), 9:21-27 ("***solenoid*** can be provided…such that ***it is shaped as or otherwise resembles a blade***, with the contact area being the thin edge of the blade"), 21:65-22:2, 2:58-63, FIGS. 9-10 (below).)

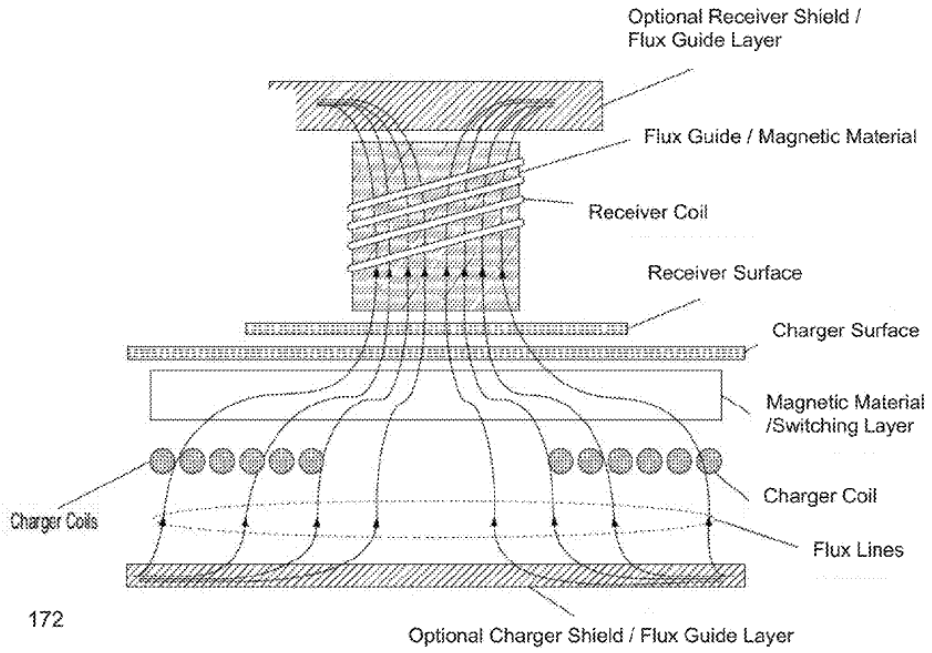

FIGURE 7

(Ex. 1001, FIG. 7.)

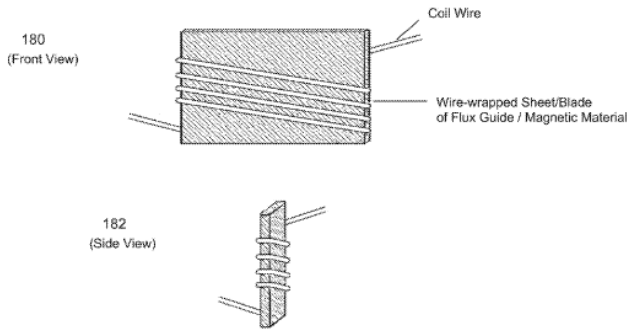

FIGURE 9

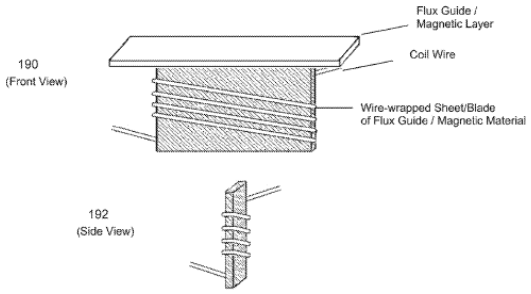

FIGURE 10

(Ex. 1001, FIGS. 9-10.) Thus the plain meaning of the claimed "solenoid" encompasses at least these types of "solenoid(s)." (Ex. 1002, ¶133.)

Fells discloses that the power receiver in the mobile device can be configured in different ways, including as a "**solenoid**" like that claimed and consistent with

that described in the '349 patent. (Ex. 1002, ¶134; Ex. 1005, FIG. 1(a) (below), 6:57-7:7, FIG. 19 (below), 6:39, 10:60-63 ("FIG. 19 shows a range of different types of receiver…FIG. 19(a) is a cylindrical rod structure; FIG. 19(b) is a rectangular rod structure"), FIG. 21 (below), 11:9-21.) (*See also* §§IX.A.1(h)-(q); Ex. 1002, ¶¶134-139.)

Fig. 1

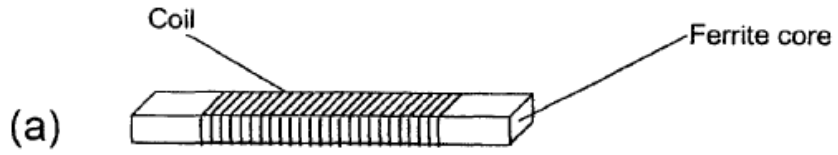

Fig. 19

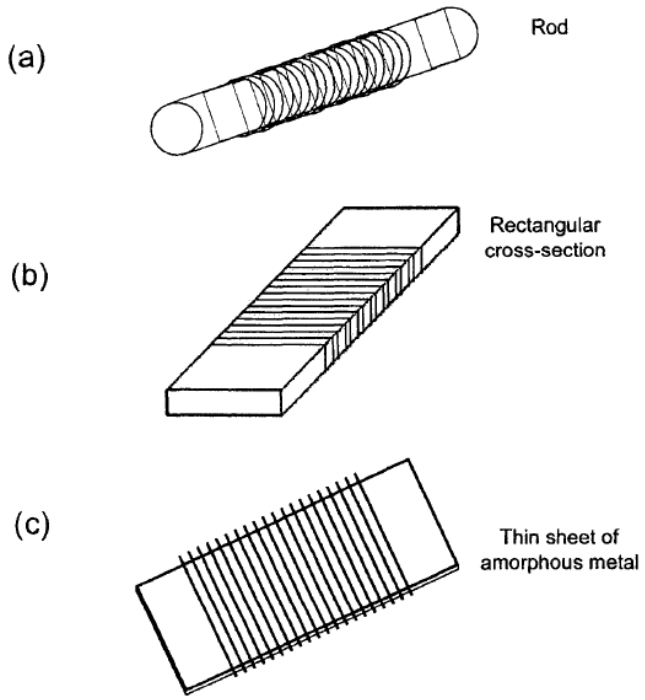

Fig. 21

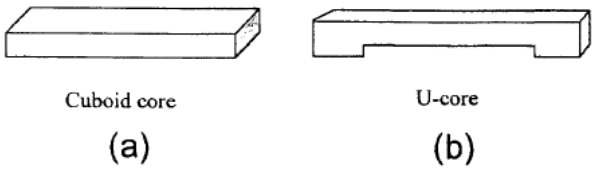

h) 1(h)/26(g): a magnetic core having a relative magnetic permeability exceeding 1 and having first and second ends; and

Fells discloses this limitation. (Ex. 1002, ¶¶140-145.) As explained, the mobile device receiver includes a secondary coil formed of a solenoid including a magnetic core (§IX.A.1(g)) that has first and second ends and facilitates the inductive charging of the mobile device. (*See* §§IX.A.1(a)-(g); *also* Ex. 1005, FIG. 1(a), 6:57-60 (receiver "has a ferrite core and coil wound around the core"), FIG. 2, 7:19-16 ("FIG. 2 illustrates the magnetic circuit formed when the power receiver is placed on the charging surface"), 8:26-32 ("presence of ***the ferrite in the receiver*** reduces the reluctance of the magnetic circuit compared to air" causing the "self-inductance of the pad coils in the vicinity of the receiver [to] increase"), 11:1-4 ("FIG. 20 shows a plan view of a receiver, which could relate to any of the configurations in FIG. 19. It is preferable that ***the coil winding does not go all the***

way to the ends of the magnetic material.”).) (*See also id.*, 12:3-8 (discussing the “permeable material” of the primary cores can be “Mn—Zn ferrite, but other magnetic materials…could be used”).)[8] Indeed, *Fells* explains that “use of a horizontal secondary is advantageous” because, *e.g.,*, “the form factor is convenient for integration either on the base or back of a mobile device” and “the elongated shape enables concentration of the magnetic field,” which “relates to the ***high effective permeability*** due to high shape-factor/low self-demagnetisation.” (Ex. 1005, 11:15-21.)

A POSITA would have understood that that such a magnetic core with “high effective permeability” necessarily discloses a “magnetic core having a relative magnetic permeability exceeding 1,” because it was known ferrite material-based cores would have relative permeability over 1, especially given the permeability of air is close to 1. (Ex. 1002, ¶143; Ex. 1006, 1:10-45, 5:49-57 (“relative magnetic permeability” was known as “the ratio between the magnetic permeability of the material and Vacuum” and the “relative magnetic permeability of air is close to 1”,

[8] *Fells*’ discussion of magnetic material, such as ferrite, as “permeable material” for the primary core would have confirmed a POSITA’s understanding that the ferrite core(s) used for the secondary coil would also be “permeable material” as known in the art. (Ex. 1002, ¶142.)

and describing the "relative permeability" of a receiving core in inductive power system "is high in comparison to the surrounding air" (e.g., "between 100-20000"), 2:4-11, 2:26-31 ("referring to core with "high magnetic permeability" like *Fells*), 2:37-39 ("relative magnetic permeability of more than 5"), 2:40-45 (receiving core made of a "so-called soft ferrite"), 2:46-48); Ex. 1007, Abstract, 3:26-40, 4:50-56 ("magnetic permeability >1"), 5:45-6:23, 15:21-16:58; Ex. 1008, Abstract, ¶¶0012, 0013-0018, 0032-0035, 0051-0053, 0073-0075; Ex. 1009, Abstract (6), 51 ("permeability (μ) refers to the ability of a material to concentrate magnetic lines of flux", "materials that can be easily magnetized are considered to have a high permeability" and "[r]elative permeability is the ratio of the permeability of a material to the permeability of a vacuum." "***[f]errites are made of ceramic material and have a relative permeabilities that range from 50-200***"). [9] (*See also* §§IX.A.1(i)-(q); Ex. 1002, ¶144.)

Given *Fells* has evidence that the magnetic core of the solenoid in the receiver can be ferrite, a POSITA would have understood that *Fells* necessarily discloses the core being of material having a permeability greater than 1. (*Supra*; Ex. 1002, ¶145.) Indeed, as explained above and below, *Fells* discloses how a magnetic field flows through the receiver magnetic core to "complete the magnetic circuit" with the

[9] Exs. 1006-1009 demonstrate the state of art knowledge of a POSITA at the time.

charger coils and magnetic layer, instead of going around it (which a POSITA would have understood to have occurred if the magnetic core was made of material with relative permeability less than 1). (Ex 1002, ¶145; Ex. 1005, 8:26-32; §§IX.A.1(d), IX.A.1(p)-(q); Exs. 1006-1009.) Moreover, *Fells* discloses concentrating the magnetic field, which a POSITA would have understood would only happen with a >1 permeability material, since it was known a relative permeability >1 allows an easier path for flux to flow than air. (Ex. 1002, ¶145). Further, teachings is consistent with the claims, where dependent claim 10 recites the "magnetic core" to be "ferrite," similar to *Fells*. (*See* §IX.A.5.)

i) 1(i)/26(h): Litz wire wrapped around a section of the magnetic core forming a wire wound section around the magnetic core, with the magnetic core extending beyond the wire wound section; and

Fells discloses this limitation. (Ex. 1002, ¶¶146-150.) In addition to that explained above, *Fells* discloses the magnetic core of the receiver "solenoid" is wrapped with a wire wound section. (§§IX.A.1(a)-(h); Ex. 1005, FIGS. 18-20, 22-23, 1:51-57 ("secondary coil"), 2:12-21, 2:43-46, 3:12-17, 3:47-53, 4:8-11, 4:38-47, 5:2-16, 5:57-64.) *Fells* discloses that "[p]referably ***Litz wire is used for*** both the primary and ***secondary coils***." (Ex. 1005, 7:3-4.) "***Litz wire*** has many strands of copper, each insulated from one another," which "allows the copper losses to be reduced as at high frequencies the skin effect means that current is only carried in the outer skin of the conductors." (*Id.*, 7:4-8.) *Fells* describes secondary core/coil

configurations where "**the magnetic core extend[s] beyond the wire wound section**" of the magnetic core like that claimed. (*Id.*, FIGS. 1, 18-20, 22-23 (some annotated below), 11:1-4 ("It is preferable that ***the coil winding does not go all the way to the ends of the magnetic material***."); Ex. 1002, ¶¶147-150.) (§§IX.A.1(j)-(q).)

Fig. 20

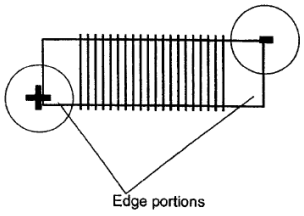

Fig. 1

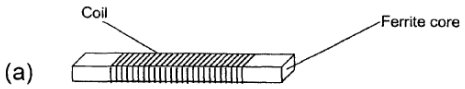

Fig. 18

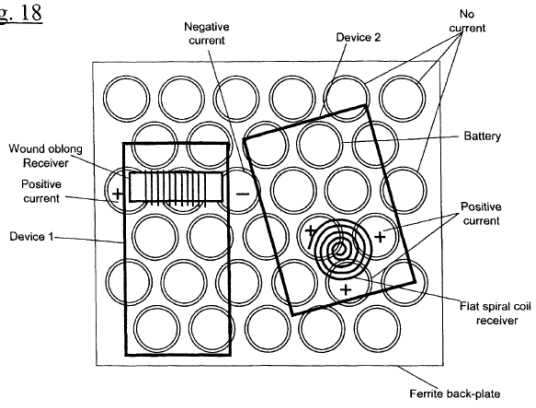

Fig. 23

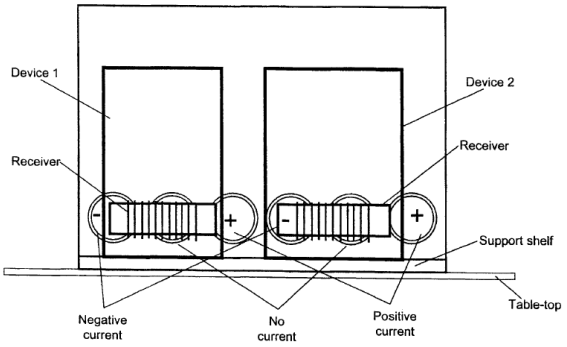

j) 1(j)/26(i): a receiver electronic circuit, wherein the receiver electronic circuit includes a resonant capacitor and a rectifier; and

Fells discloses this limitation. (Ex. 1002, ¶¶151-154.) For instance, the mobile device includes an electronic circuit configured to facilitate reception of power transferred by the charger ("**receiver electronic circuit**"). (Ex. 1005, FIG. 14, Abstract, 6:33-34 ("FIG. 14 shows a block diagram of the electronics within the portable device."), 9:64-10:12; §§IX.A.1(a)-(i); Ex. 1002, ¶152.)

Fig. 14

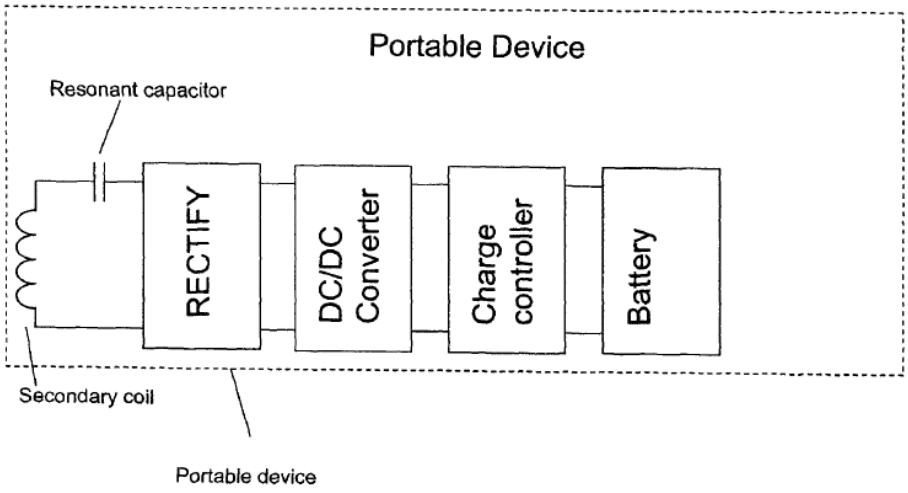

The circuit includes a rectifier (converting received AC signal to DC), a DC/DC converter (converting voltage to "required voltage level"), and charge controller coupled to the battery. (*Id.*, 9:67-10:6.) The circuit also includes a "***resonant capacitor***" (FIG. 14) that ensures "the combination is resonant at the oscillator frequency." (*Id.*, FIG. 14, 9:65-67.) Thus, *Fells*' mobile device includes a "**receiver electronic circuit**" including "**a resonant capacitor and a rectifier**,"

as claimed (*e.g.*, resonant capacitor and rectifier (shown in FIG. 14), alone or in combination with one or more of DC/DC converter and/or charge controller). (Ex. 1002, ¶¶153-154.) (§§IX.A.1(k)-(q).)

> **k) 1(k): the charger further includes a means for positioning the receiver in a power transfer position, proximate to the charger surface, to inductively transfer power to the receiver of the first mobile device;**
>
> **26(e): means for positioning a receiver in a power transfer position, which is proximate to the charger surface, to inductively transfer power to the receiver...:**

Fells discloses/suggests this limitation under its plain meaning and/or as construed above. (Ex. 1002, ¶¶155-166; §VIII.) In addition to above (§§IX.A.1(a)-(j)), *Fells* discloses charger configurations that ensure mobile devices placed proximate to the charger surface are aligned to facilitate the inductive transfer of power to the "receiver" (§§IX.A.1(f)-(j)) of the mobile device. For instance, regarding FIG. 23, *Fells* describes a variation to a horizontal flat pad charger, where the charger is configured to sit upright (at a slight angle) to allow mobile device(s) to be placed thereon ("**proximate to the charger surface**"). (Ex. 1005, FIG. 23 (below), 11:45-5:19, 1:58-63 ("secondary device may be placed anywhere on or in *proximity to the power transfer surface* to receive power") 2:21-26, 2:58-63, 3:19-34, 3:54-59, 4:17-22, 4:48-53, 5:9-23, 5:43-48, 5:65-6:3, 7:9-13, 8:57-9:45, FIGS. 10-12, 14:16-23.) (Ex. 1002, ¶156.)

Fig. 23

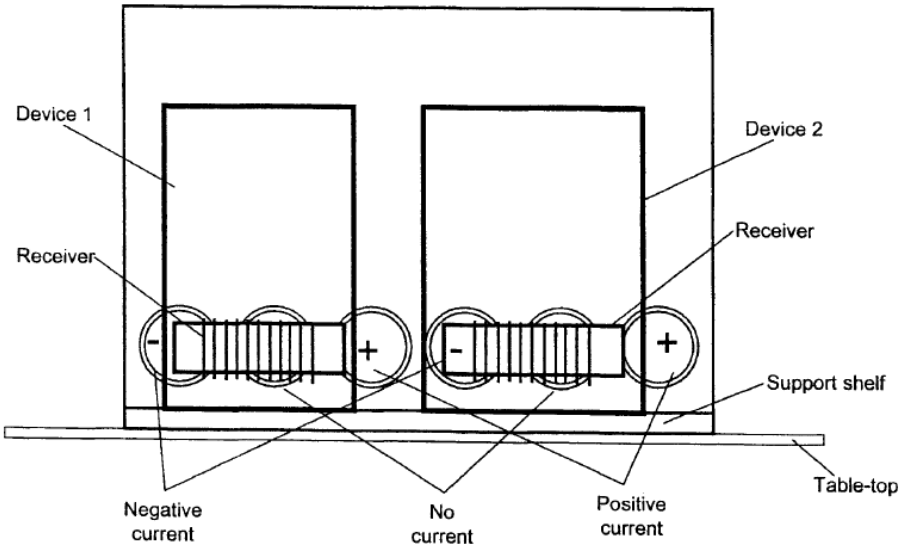

The charger can thus be configured "in the form of a shelf" so the device stands slightly titled back and upright on a ledge so that "there is **always alignment in one dimension**" with the "receiver positioned in the portable device a set distance away from the bottom edge." (Ex. 1005, 11:45-51.) The charger uses a single line of primary coils that can be selectively activated so that mobile device(s) can be placed anywhere along a line, and allows "multiple devices to be charged simultaneously." (*Id.*, 11:46-55.) The configuration "provides a scalable system that can be extended to almost any pad size by tessellation of the selectable driver coils." (*Id.*, 12:12-14.) Accordingly, the charger includes an alignment mechanism for positioning the receiver "**in a power transfer position**" as claimed since it ensures a mobile device is positioned "**proximate to the charger surface**" for

receiving power transferred from the charger's coil(s), and aligned with the receiver's coil(s). (Ex. 1002, ¶157.) Thus, in at least this configuration, *Fells* discloses the "**charger**" including a "**means for positioning**" (*e.g.*, "support shelf" (FIG. 23) or "ledge" (11:46-51) is a physical mechanism/means to assist the user in alignment of the mobile devices on the charger) as claimed. (Ex. 1002, ¶157; §VIII.)

Even if such physical means was not considered means to assist the user in device alignment, it would have been obvious to modify *Fells*' charger (even flat pad or other configurations) with other forms of physical/visual mechanisms to assist such alignment. (Ex. 1002, ¶158.) Indeed, it was well-known to use mechanical, magnetic, or visual-based mechanisms to guide a user's placement of power receiving devices (*e.g.*, mobile devices) on an inductive charging system to maximize magnetic coupling and power transfer. (Ex. 1002, ¶159; EX. 1010, FIGS. 8-9, ¶¶0102-0103; Ex. 1011, Abstract, FIGS. 1-4, 8, 11, 1:6-46, 2:14-4:62, 5:38-7:34, 10:46-12:35.)[10] A POSITA would have been motivated to consider and implement well-known mechanisms for aiding a user in aligning the mobile device(s) onto the charger of *Fells*' system (*e.g.*, for flat pad configurations), given the guidance in *Fells* associated with the shelf application of FIG. 23, and the POSITA's knowledge of the use and benefits of mechanical/visual aids for

[10] Exs. 1010-1011 demonstrate the state of art knowledge of a POSITA at the time.

facilitating the same purpose in inductive power transfer systems. (Ex. 1002, ¶¶160-164.) Modifying *Fells*' charger configurations (whether one like FIG. 23 or others that meet the claimed charger in the claimed system) with such known alignment aids mechanisms would have provided benefits/advantages beyond the FIG. 23 shelf applications as described by *Fells*. (Ex. 1002, ¶163.) Such a modification would have thus improved *Fells*' system by providing mechanisms (*e.g.*, visual/magnetic/physical) that assisted users in aligning a mobile device receiver to charger coil(s) to maximize magnetic coupling and power transfer. (*Id.*, ¶164)

A POSITA would have had the skills, knowledge, and rationale in light of the teachings/suggestions of *Fells* and a POSITA's state-of-art knowledge as noted above, to implement such a modification while taking into account design tradeoffs and techniques/technologies with a reasonable expectation of success. (*Id.*, ¶165.) Especially since implementing the above-modification would have involved applying known technologies/techniques (*e.g.*, known alignment mechanisms (*e.g.*, Ex. 1010) consistent with those taught by *Fells* (Ex. 1005, FIG. 23)) to optimize charge positioning) to yield the predictable result of providing an efficient inductive charging system consistent with that contemplated by *Fells*. (Ex. 1002, ¶165.) *KSR Int'l Co. v. Teleflex Inc.*, 550 U.S. 398, 416 (2007). (*See also* §§IX.A.1(l)-(q).)

l) 1(l)/26(j): the charger drive circuit is configured to drive the charger coil at one or more operating frequencies to inductively transfer power from the charger to the receiver when the receiver is positioned in the power transfer position, wherein when the receiver is positioned in the power transfer position, a tuned circuit, including the charger coil and the resonant capacitor of the charger drive circuit and the solenoid and the resonant capacitor of the receiver electronic circuit, has a resonant frequency that allows the charger to transfer the power to the receiver at the one or more operating frequencies;

Fells (including as modified above) discloses/suggests this limitation. (Ex. 1002, ¶¶167-171.) As explained, *Fells* discusses activating relevant charger coils based on position of the receiver coil. (§§IX.A.1(a)-(k); Ex. 1005, FIG. 10, 8:57-9:16; FIGS. 11-12, 9:18-45.) The analysis above (§§IX.A.1(e), IX.A.1(k)) demonstrates how *Fells* discloses a "**charger drive circuit**" configured to "**drive the** [one or more] **charger coil**[s]…**to inductively transfer power from the charger to the receiver when the receiver is positioned in the power transfer position**" (*See also* §§IX.A.1(a)-(d), 1(f)-(j).) Also demonstrated above is how the "**charger driver circuit**" includes a "**resonant capacitor**" used to provide an alternating voltage to selected one or more "**charger coil(s)**" (§IX.A.1(e)) and the receiver electronic circuit" includes a "**solenoid**" and "**resonant capacitor**" that respectively work to allow the "**transfer [of] the power**" from the "**charger**" "**to the receiver**" (*Id.*; §§IX.A.1(f)-(i).) (Ex. 1002, ¶168.)

A POSITA would have understood based on the disclosures of *Fells* (*supra* §§IX.A.1(a)-(k)) that the "**resonance capacitor**" in the "**charger**" would have caused the "**charger driver circuit**" to "**drive the charger coil at one or more operating frequencies to inductively transfer power**" to the mobile device receiver. (§IX.A.1(e); Ex. 1002, ¶169.) Indeed, consistent with that known in the art, *Fells'* resonant capacitor allows the charger to efficiently transfer power in the system that provides an operating frequency via the voltage source used in the charger's "drive[r] circuit." (§IX.A.1(e); Ex. 1005, 9:46-67, 13:53-14:14.) A POSITA would have thus understood that the power is transferred from the charger to the receiver at the resonant frequency designed for efficient power transfer consistent with that disclosed by *Fells*. (*Id.*, Ex. 1002, ¶170; Ex. 1005, 8:33-41 (discussing how in some configurations, AC voltages used for sensing (Vac) may be at "a different frequency to the power transmission" (*e.g.*, "submultiple of the ***power transmission frequency***").)

Fells' system operates such that "**a tuned circuit**" is formed from the "[selected/activated] **charger coil[s] and the resonant capacitor of the charger drive circuit**" (§IX.A.1(e)) "**and the solenoid and the resonant capacitor of the receiver electronic circuit**" (§§IX.A.1(f)-(j)) which "**has a resonant frequency that allows the charger to transfer the power to the receiver at the one or more operating frequencies**" as claimed. (Ex. 1002, ¶171.)

Indeed, *Fells* explains how the receiver circuit in the mobile device has a resonant capacitor that is "resonant at the oscillator frequency" of the charger's resonant capacitor circuit (thus forming such a "**tuned circuit**"). (Ex. 1002, ¶171; §§IX.A.1(f)-(j); Ex. 1005, 9:46-67, 25:40-26:32 ("primary unit and secondary device having a resonant frequency" (*e.g.*, tuned circuit), the primary unit (*e.g.,* charger) including driver circuitry with switching circuitry and variable impedance circuitry that can be "adjusted to affect the resonant frequency of the system" (claim 21), and control circuitry controlling "switching circuitry" to "selectively activate a field generator" (*e.g.*, charger coil) "to transfer power inductively to the secondary device (*e.g.*, mobile device) (claim 22), where the control circuitry "maintains inductive power transfer at or near the resonant frequency" (claim 23).) (*See also id.*, 22:37-23:26 (similar), 23:57-24:40 (similar), 24:63-25:33, 25:12-15 ("inductive coupling [between field generators and secondary device] has a resonant frequency").) (*See also* §§IX.A.1(m)-(q).)

m) 1(m)/26(k): the charger coil includes a conductor patterned to include multiple, substantially concentric turns for generating a magnetic flux through a first end of the solenoid when the receiver is placed in the power transfer position, wherein an outermost of the concentric turns defines a perimeter of a charger coil area;

Fells (including as modified above) discloses/suggests this limitation. (Ex. 1002, ¶¶172-177.) As explained, the "**charger coil(s)**" can be planar spiral coils,

which includes a "**conductor patterned to include multiple, substantially concentric turns**." (§IX.A.1(c); Ex. 1005, 10:26-36, FIGS. 16-17, 11:45-64; *see also* §§IX.A.1(a)-(l).) As exemplified below, "**an outermost of the concentric turns**" of the conductor in a charger coil "**defines a perimeter of a charger coil area**" as claimed. (Ex. 1002, ¶¶173-175; *e.g.*, Ex. 1005, FIGS. 16-17, 23 (annotated below); *see* citations/discussions below and above in §§IX.A.1(a)-(l).)

Fig. 16

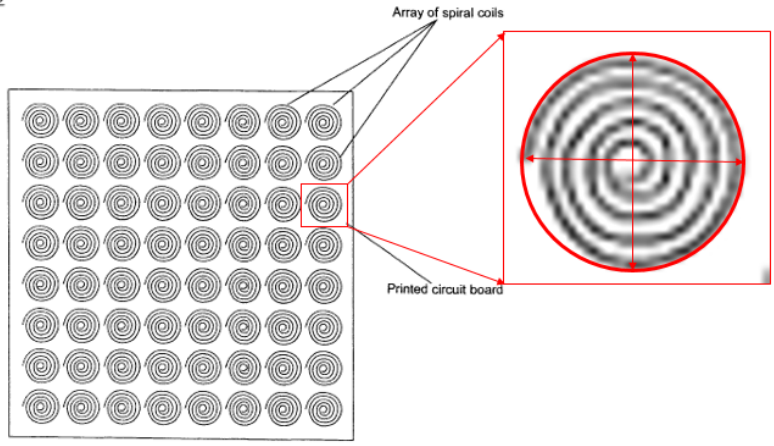

Fig. 17

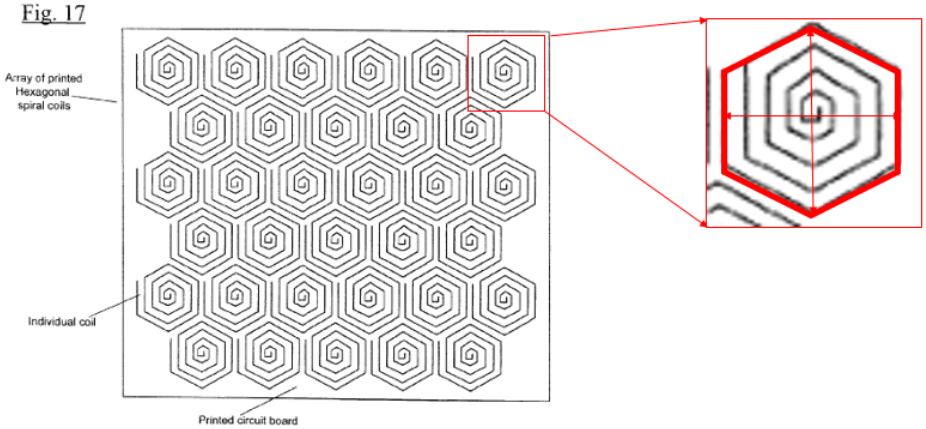

Fig. 23

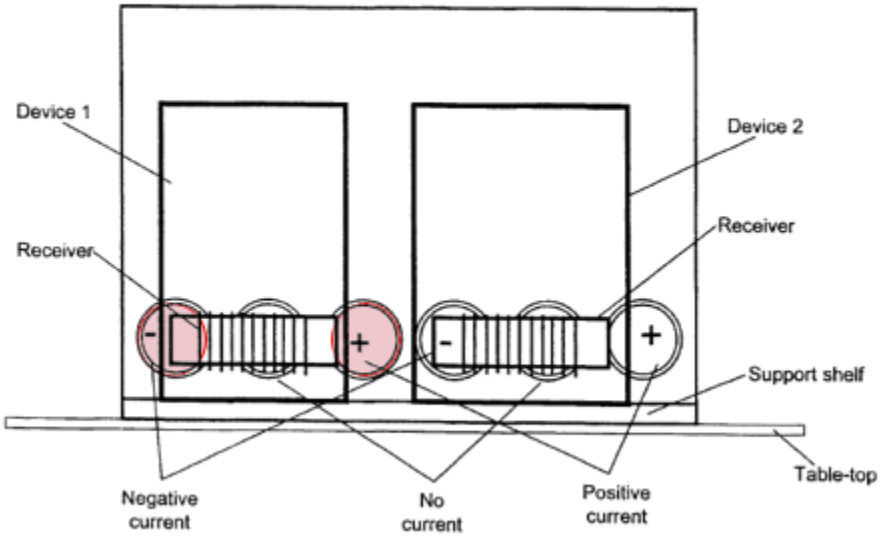

Such charger coil(s) "**generat[es] a magnetic flux through a first end of the solenoid when the receiver is placed in the power transfer position**. (Ex. 1002, ¶176; §§IX.A.1(c), IX.A.1(f)-(l); Ex. 1005, FIG. 2, 1:55-57 ("flux"), 2:17-20, 2:54-56, 3:26-28, 3:51-53, 4:12-16, 5:15-16, 5:37-42, 5:61-64, 11:61-12:2, 14:57-65 ("magnetic flux"), 15:49-54, 16:29-36, 17:9-17, 17:53-62, 18:29-35, 19:9-17, 19:62-20:2, 20:47-51, 21:4-18, 22:37-45 ("primary unit comprising: a power transfer surface capable of enabling inductive coupling with said secondary device…).) Indeed, *Fells* explains how different charger coils can be activated such that magnetic flux flows through the end of the mobile device's receiver, which occurs whether the charger coils are configured as planar spiral-type coils or in other configurations. (Ex. 1005, FIGS. 2, 5, 8 (below), 23 (annotated below), 1:3-6:3,

6:56-8:9, 10:26-11:8, 11:26-12:19; *see also id.*, 8:10-10:25, 11:9-25, 13:26-22:35; Ex. 1002, ¶177; §§IX.A.1(n)-(q).)

Fig. 23

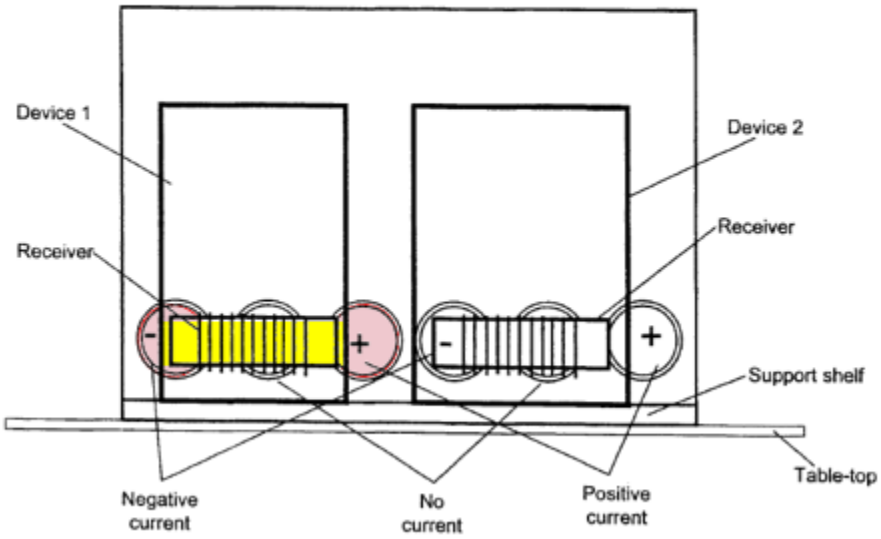

Fig. 2

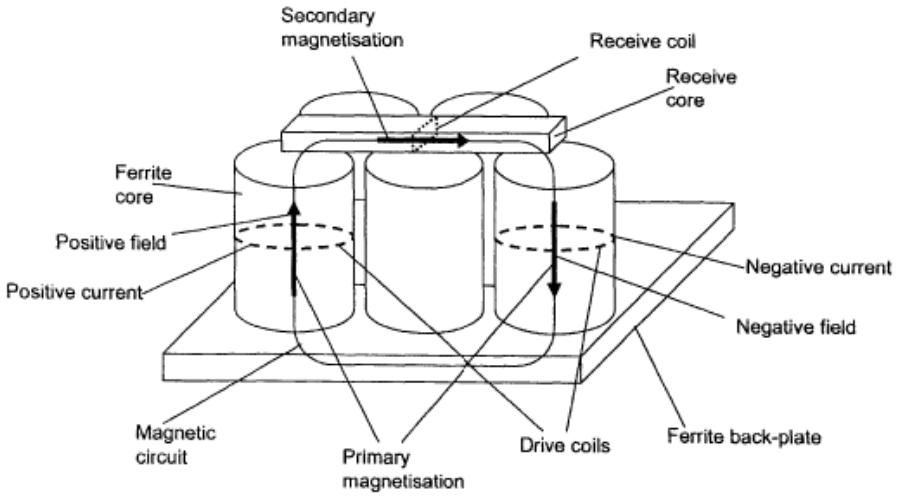
Secondary magnetisation
Receive coil
Receive core
Ferrite core
Positive field
Positive current
Negative current
Negative field
Magnetic circuit
Primary magnetisation
Drive coils
Ferrite back-plate

Fig. 5

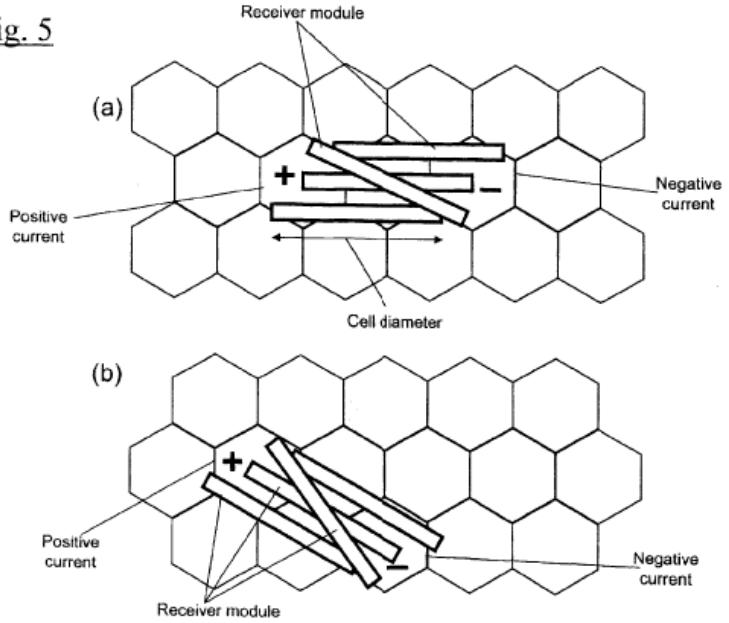
Receiver module
(a)
+
−
Positive current
Negative current
Cell diameter
(b)
+
−
Positive current
Negative current
Receiver module

Fig. 8

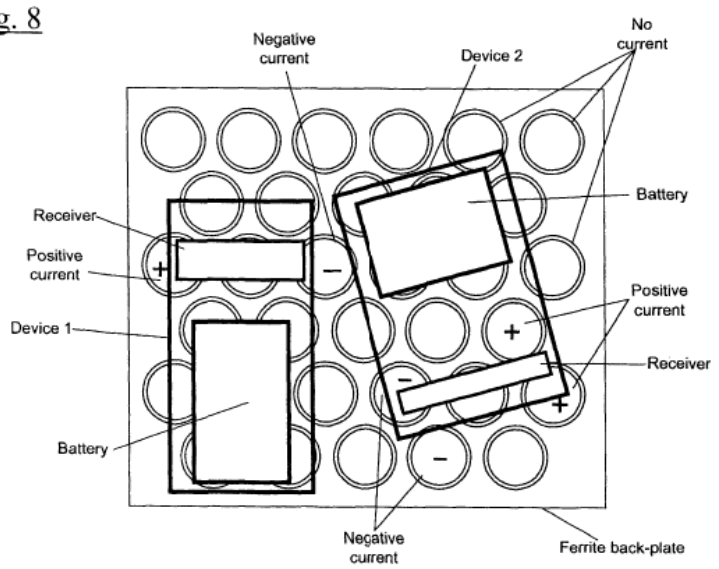

n) 1(n)/26(l): the multiple [substantially] concentric turns, when driven by the charger drive circuit, generate a magnetic field that is substantially perpendicular to the charger surface at a geometric center of the charger coil area,[11]

Fells (including as modified above) discloses/suggests this limitation. (Ex. 1002, ¶¶178-183.) As explained, each activated charger coil in *Fells*' charger is "**driven by the charger drive[r] circuit**" in accordance with the various configurations contemplated by *Fells*, including those employing planar spiral type coils with "**substantially concentric turns**." (§IX.A.1(1)-(m); §§IX.A.1(a)-(k).) When driven, "**a magnetic field that is substantially perpendicular to the charger**

[11] The plain language does not require all magnetic fields to only be generated at the geometric center—only that ***a*** magnetic field be so generated.

surface" is generated. (Ex. 1002, ¶179.) For instance, consistent with that discussed above (§§IX.A.1(a)-(m)), *Fells* describes system configurations where power is transferred "from a primary unit to a secondary device, separable from the primary unit, by electromagnetic induction" where the primary unit comprises "***a power transfer surface***" (*e.g.,* "charger surface") and "a plurality of field generators" (*e.g.,* charger coils) that are "each able to generate a field ***substantially perpendicular to the power transfer surface***." (Ex. 1005, 1:41-49.) "[***M]agnetic flux*** from at least one field generator flows through the secondary coil, supplying power to secondary device." (*Id.*, 1:55-57; *see also id.*, 6:66-7:1 ("[c]urrent is applied to the coils so as to generate a magnetic field in a direction perpendicular to the charging surface").)

FIG. 2 illustrates how a magnetic field, for example, that labeled "positive field," flows through the center of a charger core/coil in a perpendicular direction to the surface of the charger. (Ex. 1005, FIG. 2 (below), 7:9-21.)

Fig. 2

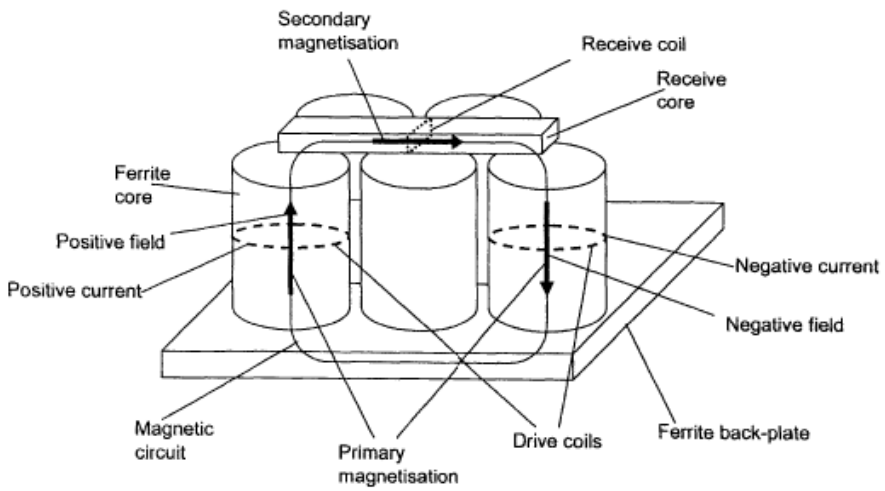

A POSITA would have understood planar spiral type charger coils (like those taught by *Fells*) would likewise generate magnetic field lines substantially perpendicular to the surface of the charger and flow through the geometric center of the coil surface area, similar to that in a loop type coil as known in the art. (Ex. 1002, ¶¶180-182; Ex. 1012, 559 ("magnetic field at the center of [a wire] loop is perpendicular to the plane of the loop"), 558.)[12]

[12] Ex. 1012 demonstrates the state of art knowledge of a POSITA at the time.

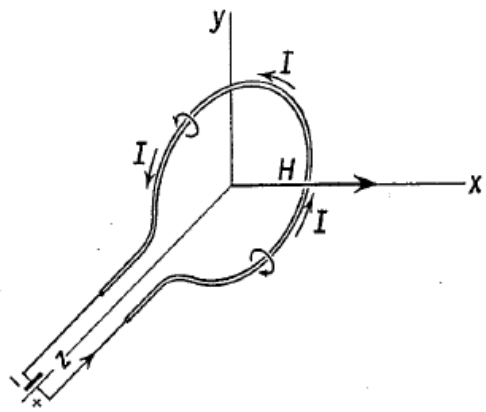

Fig. 30-4 Magnetic field produced by a current in a circular loop of wire. The magnetic field at the center is at right angles to the plane of the loop.

(Ex. 1012, 559, FIG. 30-4, 562 (discussing magnetic field intensity "at the center of a singular circular loop of wire carrying a current," where the "direction of the magnetic field *d*H…is in the positive *z* direction" at the center (as shown in FIG. 30-8 (below) (perpendicular to loop plane)), 563.)

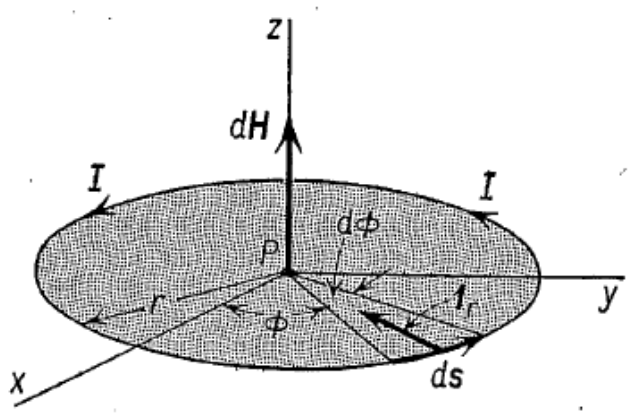

Fig. 30-8

A POSITA also understood, "[i]n the event we have a coil of *N* turns of wire wound as a flat circular coil rather than a single circular loop, each turn of the coil contributes a magnetic field at the center of the coil" where "the total magnetic field is *N* times that given by Equation (30-3)" given "these field contributions are all in

the same direction," and thus "has at its center a magnetic field H" given by equation (30-4) (shown below). (*Id.*, 564.)

$$\mathbf{H} = \frac{NI}{2r}\mathbf{1}_z. \qquad (30\text{-}4)$$

(*Id.*, 564; *id.*, 592 (magnetic flux ϕ being total number of lines pass perpendicularly through an element of area).)

Accordingly, a POSITA would have understood that the substantially perpendicular magnetic field generated by each of the planar spiral charger coils in the above-described *Fells* charger would include a field "**at a geometric center of the charger coil area**" consistent with conventional planar spiral coils like those described by *Fells.* (Ex. 1002, ¶183; Ex. 1013, Abstract, FIGS. 1-6, 1:28-2:4 ("spiral coil with a "high magnetic field strength at the center of the coil"), 2:27-3:14, 4:11-24 ("region of interest can cover a portion of, or all of the area of the coil" including "the area enclosed by the outermost turn of the coil"), 5:23-6:15, claims 1-88; Ex. 1014, Abstract, FIGS. 1, 5-6, 9, 11-12, 24-26, ¶¶0008-0010, 0044-0050, 0051 (peak intensity of magnetic field at inductor center), 0065-0066, 0070, 0073, 0078; Ex. 1015, Abstract, FIGS. 1-5, 9A-9C, 5:22-6:45, 11:22-33, 12:28-38, 16:25-17:23,

17:61-18:3 ("substantially perpendicular" magnetic field from planar coils).[13] (*See also* §§IX.A.1(o)-(q).)

o) 1(o)/26(m): the charger coil area is larger than an area of the first end and larger than an area of the second end of the magnetic core of the solenoid;

Fells (including as modified above) discloses/suggests this limitation. (Ex. 1002, ¶¶184-194; §§IX.A.1(a)-(n).)

As explained, *Fells* discloses various configurations/applications of its inductive power transfer system. (§§IX.A.1(a)-(l).) *Fells* discusses many aspects relating to such system configurations (Ex. 1005, 1:50-6:3, 14:36-22:33) including *e.g.*, varying gap spacing between charging surface and power receiver (*id.*, 7:16-21), coil and receiver configurations (*id.*, 7:22-24 (coils can have a diameter and height of 12.7mm with 15mm pitch, and 25mm long receiver)), 10:60-11:44 (exemplary types of receivers), 12:15-19), charger configurations (*id.*, 11:45-12:8, 13:14-14:31), dimensional relationships between charger coils and power receiver (*id.*, 7:31-8:9), and different components (*id.*, 8:42-56, 12:66-14, 14:32-35). (Ex. 1002, ¶185.)

As noted, the claimed "**solenoid**" is not limited to a rod shaped structure, but may be shaped as a "blade or thin solenoid." (§IX.A.1(g); Ex. 1001, 2:30-31, 2:54-

[13] Exs. 1013-1015 demonstrate the state of art knowledge of a POSITA at the time.

55, 8:63-65, 9:21-27, 21:65-22:2, 2:58-63, FIGS. 7, 9-10.) Likewise, *Fells* discloses similar types of a "solenoid" that includes two ends. (§IX.A.1(g); Ex. 1005, FIGS. 1(a), 19(a)-(b), 21, 6:57-7:7, 10:60-63, 11:9-21.) *Fells* explains that the "coils themselves could physically be a range of different structures as will be become apparent later" and exemplifies that "[d]imensions which give good performance for powers of 2-5 W are: ***a power receiver which is 30 mm long with a cross section of 2 mm x 6 mm***; and a ***charging surface with a cell diameter of 15 mm***." (Ex. 1005, 7:37-42.) A POSITA would have understood such dimensions to reflect a charging cell having a cylindrical shaped coil (since it has a surface cell "diameter"), and a power receiver "solenoid" with a magnetic core having rectangular shaped ends (since it has a "cross section" with a length/width), similar to those described by *Fells*. (Ex. 1002, ¶¶186-190; Ex. 1005, FIGS. 1(a), 16-17, 19(b), 21(a), 23 (below); §§IX.A.1(c), IX.A.1(f)-(i), IX.A.1(m)-(n).)

Fig. 1

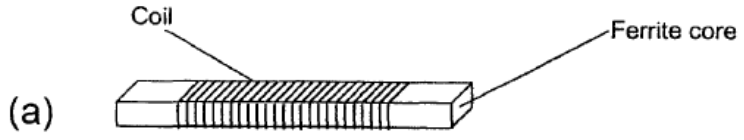

Fig. 19

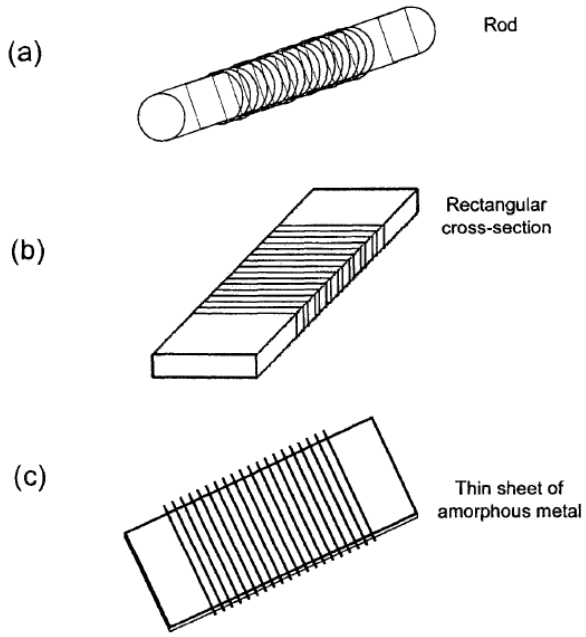

Fig. 21

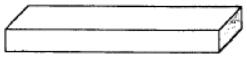

Cuboid core

(a)

Fig. 16

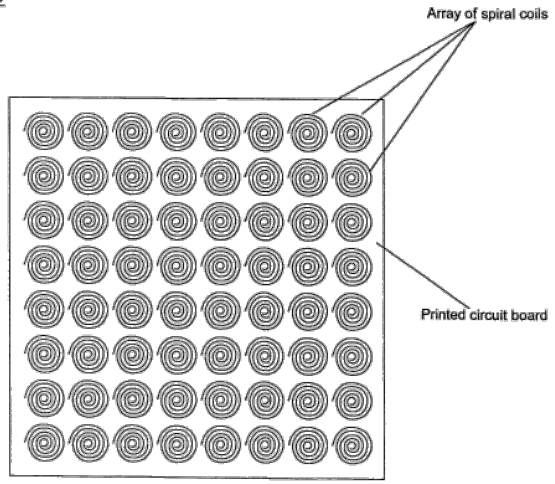

Fig. 17

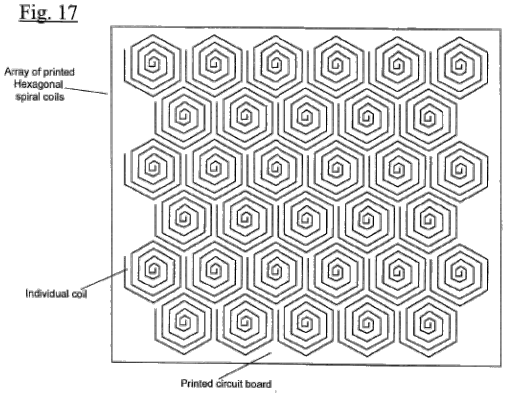

Fig. 23

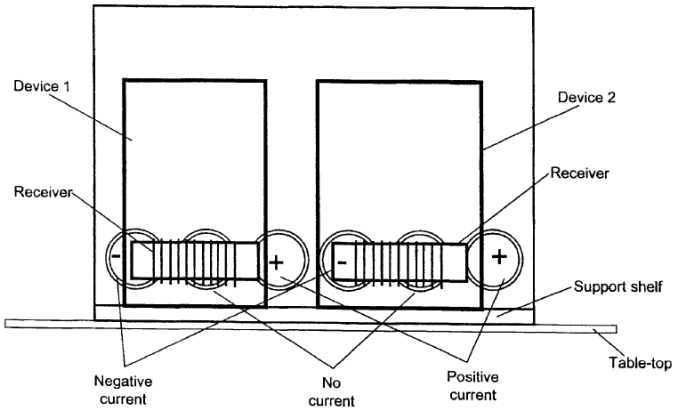

Thus, a POSITA would have understood exemplary circular shaped charging cells (*e.g.*, a spiral coil) with a 15mm diameter (7.5mm radius) would have an area approximately 176.6 mm^2 (area=πr^2, where r=7.5mm).[14] Likewise, the ends of the

[14] A POSITA would have been able to determine the area of other charging cell areas, like a hexagon (A= $((3\sqrt{3})/2)*(\text{side-length})^2$).

magnetic core of the solenoid in the exemplary power receiver have an area of 12 mm^2 corresponding to the 2mm by 6mm cross section.[15] (Ex. 1002, ¶191.) Accordingly, *Fells* discloses configurations where "**the charger coil area**" in the above-discussed charger (§§IX.A.1(b)-(c), (m)-(n)) (*e.g.,* ~176.6mm^2) "**is larger than an area of the first end and larger than an area of the second end of the magnetic core of the solenoid**" (*e.g.,* ~12mm^2 each). (Ex. 1002, ¶191.)

Nonetheless, to the extent *Fells* does not expressly disclose such features (*e.g.*, disclosing dimensions for both ends of the solenoid's magnetic core (including rod/cylindrical shaped solenoid magnetic cores)), it would have been obvious to a POSITA to configure/implement a mobile device with a power receiver having a solenoid having a magnetic core with ends having an area smaller than the charging coil area. (Ex. 1002, ¶192.) A POSITA would have been motivated to consider and implement such receiver solenoid magnetic cores (whether rod/cylindrical or rectangular/cuboid shaped, etc.) to be consistent with configurations contemplated by *Fells*. (*Id.*; *supra* citations/discussions above in this section regarding *Fells*.) A POSITA would have had reasons to consider and implement various types of

[15] A POSITA would have understood that the rectangular prism/cuboid-shaped magnetic cores taught by *Fells* (Ex. 1005, FIGS. 19(b), 21(a)) would have opposite faces that are equal—a known property of a cuboid. (Ex. 1002, ¶191.)

components, having various dimensions, given *Fells* contemplates variations in the types of materials, sizes, arrangements, and the like in the inductive charging system, as noted above (*supra*). (Ex. 1002, ¶192.) Moreover, a POSITA would have recognized how *Fells exemplifies* in its figures receivers with cores that appear to have ends with a width smaller than exemplary charging cell sizes. (*See e.g.,* Ex. 1005, FIGS. 5-8, 18, 23 (below).)[16]

[16] Although the exemplary figures show "receiver" modules, a POSITA would have understood the solenoid magnetic core contained therein would be no larger than the receiver module. (Ex. 1002, ¶191.)

Fig. 5

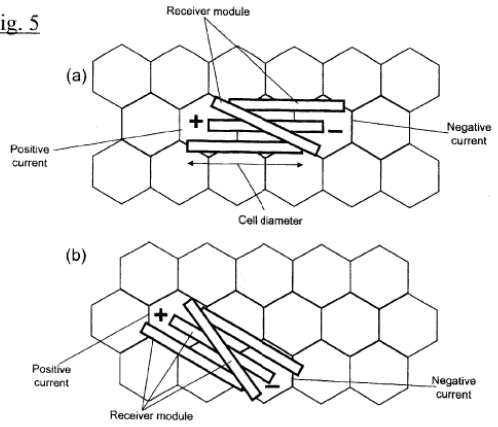

Fig. 6

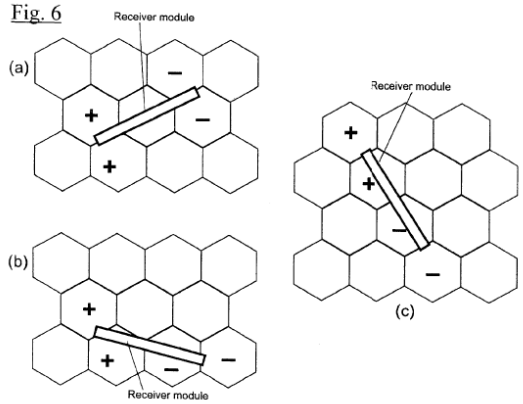

Fig. 7

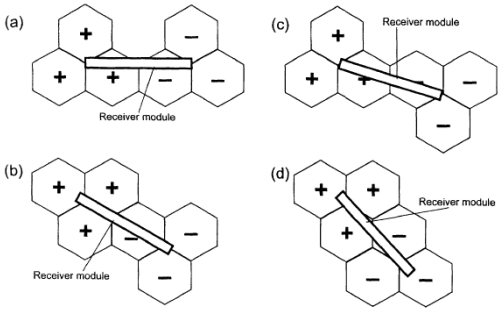

Fig. 8

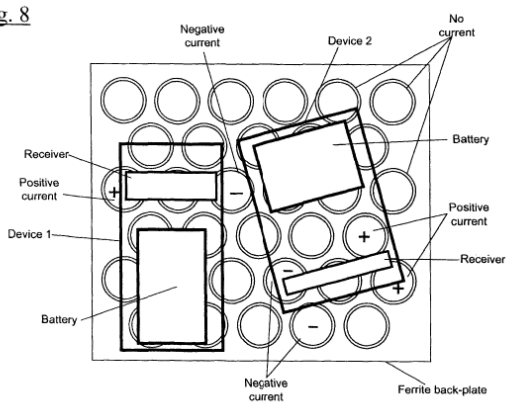

Fig. 18

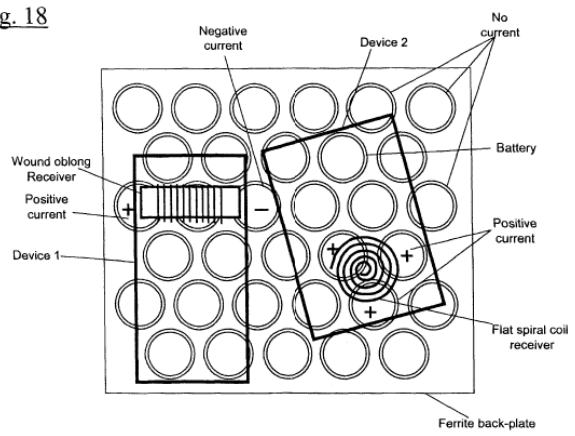

Fig. 23

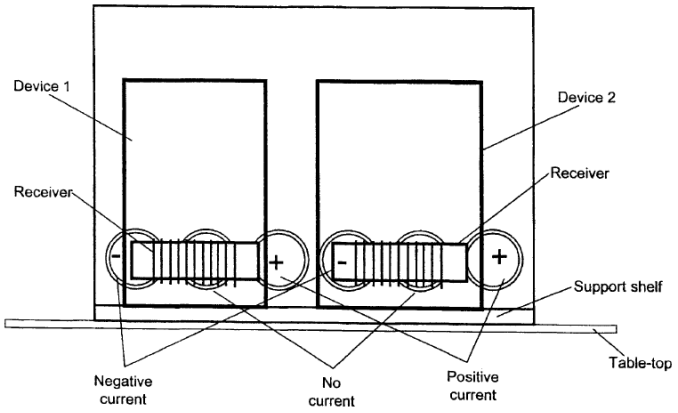

While a POSITA would have appreciated that such figures are exemplary, and do not expressly convey actual receiver dimensions or the magnetic cores contained therein, a POSITA would have been guided by such depictions in context of *Fells*' other teachings providing exemplary dimensions (*see supra*; Ex. 1005, 7:9-42), to consider designs that track similar area relationships disclosed in *Fells* (*e.g.,* Ex. 1005, 7:38-42) that would have resulted in dimension/area relationships like those

recited in limitation 1(o)/26(m). (Ex. 1002, ¶193.) Thus, in light of such teachings/suggestions in *Fells*, a POSITA would have been motivated to consider and implement various types of magnetic cores for the receiver's solenoid (§§IX.A.1(f)-(h)) including those have ends with an area smaller than the charging cell area (§IX.A.1(c), 1(l)-(o)).

A POSITA would have had the skills, knowledge, and rationale in light of the teachings/suggestions of *Fells* and a POSITA's state-of-art knowledge as noted above, to implement such a configuration, while taking into account design tradeoffs and techniques/technologies associated with the configuration, and done so with a reasonable expectation of success. (Ex. 1002, ¶194.) Indeed, implementing the above-modification would have involved applying known technologies/techniques (*e.g.*, known shaped/sized magnetic receiver cores and planar charging coils, consistent with those taught by *Fells*) to predictably provide an inductive charging system that is configured to provide power transfer functionalities for given applications, consistent with those discussed by *Fells*. (*Id.*, ¶194.) *KSR*, 550 U.S. at 416. (§§IX.A.1(a)-(n), IX.A.1(p)-(q).)

p) 1(p)/26(n): the magnetic layer of the charger extends beyond the charger coil area; and

Fells (including as modified above) discloses/suggests this limitation. (Ex. 1002, ¶¶195-199.) As explained, *Fells* discloses a ferrite backplate, which is a "**magnetic layer**" (limitation 1(d)/26(c)). (§IX.A.1(d).) While *Fells* does not

expressly state the size/dimensions of the magnetic backplate, *Fells* shows examples of the backplate that are clearly beyond the charger coil area (of not just one charger coil, but others in the charger). (Ex. 1005, FIG. 1(b) (below), 6:57-63 (FIG. 1(b) showing charging cores "attached to a ***ferrite backplate***."), FIG. 2 (below), 7:9-21 (discussing FIG. 2 and "the ***ferrite backplate***" used "to complete the circuit"), FIG. 3, 7:25-29.) (Ex. 1002, ¶¶196-197.)

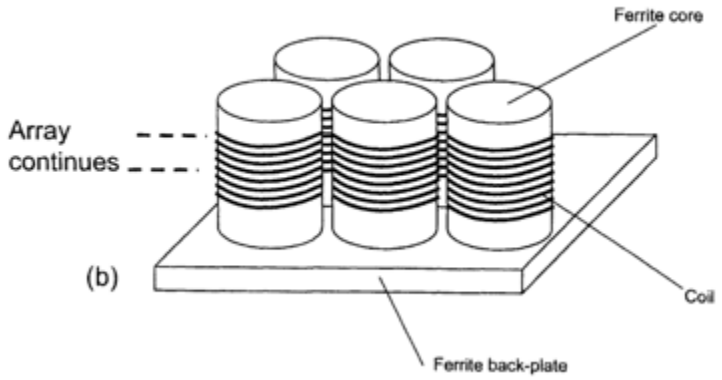

Fig. 2

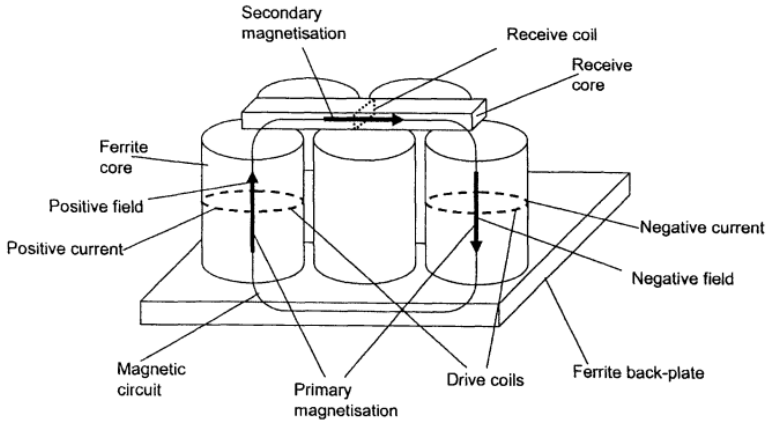

Fig. 3

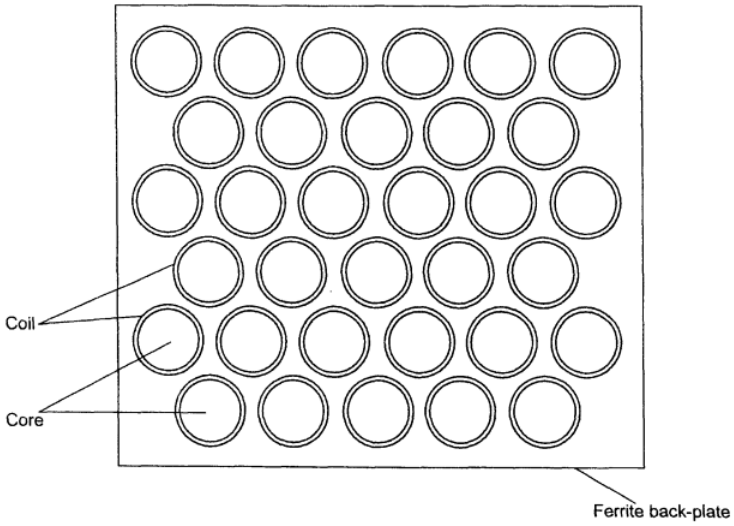

Accordingly, to the extent not evident or disclosed, it would have been obvious to a POSITA to consider and implement a ferrite back-plate that extends beyond the "charger coil area" (§IX.A.1(m)-(o)) to ensure the charger coil(s) has a magnetic layer to "complete the [magnetic] circuit" that is "formed when the power receiver is placed on the charging surface" including the charger coil(s), consistent with that discussed by *Fells*. (Ex. 1005, 7:9-16 ("[t]he field is concentrated in the ferrite and forms a ***magnetic circuit*** from the first coil, through the receiver core, through the second coil and through the ferrite backplate to ***complete the circuit***"); Ex. 1002, ¶198.) Such a modification would have been a predictable application of *Fells*' teachings and configurations that would have been within the capabilities, knowledge, and skills of a POSITA and motivated by the teachings/suggestions in *Fells*. (Ex. 1002, ¶199.) In light of such guidance and a POSITA's

knowledge/skills, a POSITA would have had a reasonable expectation of success that implementing such a modification would have resulted in an inductive power transfer system that operated as intended and consistent with that contemplated by *Fells*. (*Id.*) *KSR*, 550 U.S. at 416. (§§IX.A.1(a)-(o), IX.A.1(q).)

q) 1(q)/26(o): when the receiver is in the power transfer position, the first end of the magnetic core is located proximate to the charger coil area above the charger surface to receive magnetic flux from the charger coil area and guide the magnetic flux in a closed magnetic loop from the charger coil area through the solenoid and return through the charger magnetic layer to the charger coil area to form the closed magnetic loop.

Fells (including as modified above) discloses/suggests this limitation. (Ex. 1002, ¶¶200-206; §§IX.A.1(a)-(p).) Section IX.A.1(k) explains how the charger in *Fells*' system includes an alignment mechanism/means for positioning the receiver "**in a power transfer position**" to ensure the mobile device is positioned "**proximate to the charger surface**" for receiving power transferred from the charger's coil(s). (§IX.A.1(k); Ex. 1002, ¶201.) A POSITA would have understood in light of *Fells'* teachings noted above (§§IX.A.1(a)-(p)), that when the receiver is in the "**power transfer position**," inductive power transfer takes place between the charger coil(s) and the receiver coil, consistent with that known in the art, resulting in magnetic flux flowing between the charger coils and the magnetic core of the receiver solenoid. (*Id.*; Ex. 1002, ¶201.)

Indeed, as explained, regarding FIG. 2 (below), *Fells* explains a "magnetic circuit [is] formed when the power receiver is placed on the charging surface" such that "[a] coil in proximity to ***one end of the receiver*** is driven with current in a positive sense and a coil in proximity to the ***other end*** is driven in a negative sense," where "[t]he field is concentrated in the ferrite and forms a magnetic circuit from the first coil, through the receiver core, through the second coil and through the ferrite backplate to complete the circuit." (Ex. 1005, 7:9-21.)

Fig. 2

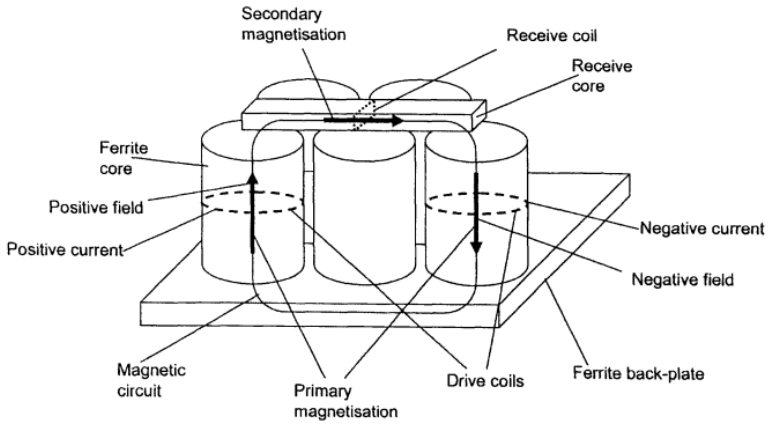

Similarly, regarding FIG. 23, *Fells* explains that "vertical cores can be hollow, to reduce cost and weight, as the overall ***flux*** density is not high enough to require a solid part" and that "[a] ***ferrite back-plate*** may be used behind the vertical cores to ***act as a flux return path***, and this improves the coupling factor." (*Id.*, 11:65-12:2.) As explained above, *Fells* discusses how magnetic flux would flow consistent with a POSITA's understanding of such inductive power transfer system arrangements.

(*See* §IX.A.1(m) (discussing *Fells* "magnetic flux"); Ex., 1005, 1:3-6:3 (*e.g.,* 1:55-57 ("magnetic flux from at least one field generator flows through the secondary coil, supplying power to secondary device")), 6:56-8:9, 10:26-11:8, 11:26-12:19, 14:57-65, 15:49-54, 16:29-36, 17:9-62, 18:29-35, 19:9-17, 19:62-20:2, 20:47-51, 21:4-18); §IX.A.1(h); Ex. 1002, ¶¶202-203; Ex. 1009, 51; Ex. 1012, 592 (discussing magnetic flux ϕ).)

A POSITA would have thus understood the similar operation/characteristics would occur between the planar charger coils and the solenoid's magnetic core in a receiver placed proximate to the charger coil(s) in context of the above-discussed configurations of *Fells*. (Ex. 1002, ¶204; Ex. 1005, FIGS. 4-8, 16-18, 23, 7:31-8:11, 10:26-58, 11:45-12:8; §IX.A.1(m) (different charger coils can be activated such that magnetic flux flows through the end of the device's receiver (and its solenoid's magnetic core), even with planar spiral-type charger coils and other configurations); §IX.A.1(h).)

A POSITA would have thus understood that *e.g.*, the flow of flux from a first activated charger coil (*e.g.*, "-") through the magnetic core of the receiver's solenoid (e.g., receiver module), to another activated charger coil (*e.g.,* "+") and through the backplate to the first activated coil would form a "**closed magnetic loop**" like that claimed in order to "complete the magnetic circuit." (Ex. 1005, 7:9-16, 7:31-36, FIGS. 2 (above), 4 (below).) (Ex. 1002, ¶205.)

Fig. 4

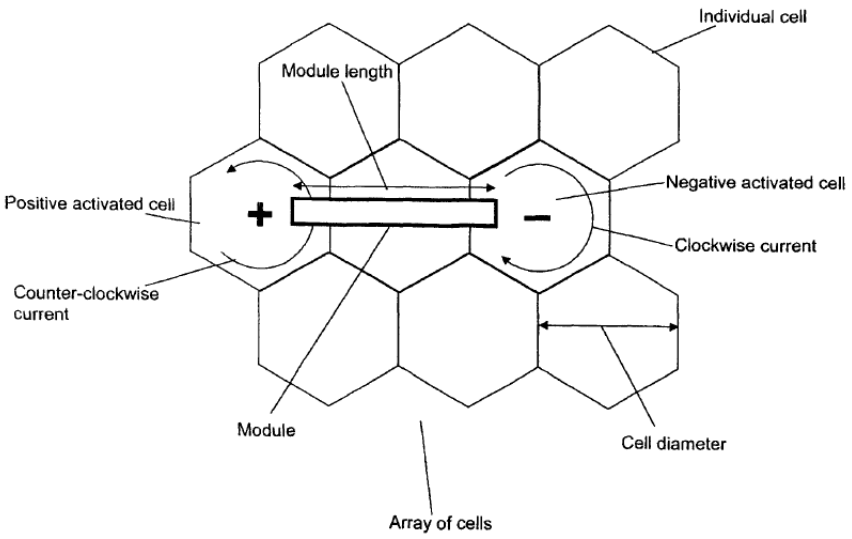

Accordingly, *Fells* discloses/suggests "**when the receiver is in the power transfer position**" (§IX.A.1(k)), "**the first end of the magnetic core**" (of the receiver solenoid (§§IX.A.1(f)-(h), IX.A.1(o)) "**is located proximate to the charger coil area above the charger surface to receive magnetic flux from the charger coil area**" (*see* discussions above; §§IX.A.1(m)-(o)) "**and guide the magnetic flux in a closed magnetic loop from the charger coil area through the solenoid and return through the charger magnetic layer to the charger coil area to form the closed magnetic loop**" (*supra*; §§IX.A.1(m)-(p)), as claimed. (Ex. 1002, ¶206.)

2. Claim 5

a) The system of claim 1, wherein the charger coil area is at least ten times larger than the area of each of the ends of the magnetic core of the solenoid.

Fells (including as modified above) discloses/suggests this limitation. (Ex. 1002, ¶¶207-209.) The analysis for limitations 1(o)/26(m) demonstrates how *Fells* discloses configurations where the charger coil area is at least ten times larger than each of the ends of the magnetic core of the solenoid in the receiver. (§IX.A.1(o) (explaining how *Fells* discusses different aspects relating to the system (*e.g.,* coil/receiver/charger/solenoid configurations, dimensions, components, etc.). (§IX.A.1(o); Ex. 1005, FIGS. 1(a), 19(a)-(b), 21, 1:50-6:3, 6:57-7:7, 7:16-8:9, 8:42-56, 10:60-11:44, 12:66-14, 14:32-22:33.) Also explained is how, in one example, *Fells'* system can include a charger coil area of approximately 176.6 mm^2 and a solenoid with a magnetic core with ends each having an area approximately 12 mm^2. (§IX.A.1(o) (*see* §IX.A.1(o); Ex. 1002, ¶208.) Such a configuration demonstrates a charger coil area that is ~14.7 times ("**at least ten times**") larger that the area of each of the ends of the magnetic core of the solenoid, like that recited in claim 5. (*Id.*)

Moreover, to the extent *Fells* does not expressly disclose such features (*e.g.*, dimensions for both core ends of solenoid (including rod/cylindrical-shaped cores)), it would have been obvious to a POSITA to configure and implement the above-discussed charger with charger coils having a coil area at least ten times the area of

each of the ends of the solenoid magnetic core for the same reasons explained for limitation 1(o)/26(m). (§IX.A.1(o); Ex. 1002, ¶209.) Thus, a POSITA would have had the same motivation, skills, capabilities, knowledge, and expectation of success in implementing such a modification as that explained for limitation 1(o)/26(m). (*Id.*)

3. Claim 7

a) The system of claim 1, wherein the magnetic core of the solenoid has a cross sectional dimension in at least one end of 1 to 2 mm and has a length along a winding axis of 10 to 20 mm.

Fells (including as modified above) discloses/suggests this limitation. (Ex. 1002, ¶¶210-215; §§IX.A.1.)

As explained for claim 1, *Fells* describes an exemplary configuration of "a power receiver which is 30mm long with a cross section of 2mm x 6mm." (Ex. 1005, 7:37-42; §IX.A.1(o); Ex. 1002, ¶211.) A POSITA would have thus understood *Fells* to disclose a receiver configuration having "**a solenoid with a cross sectional dimension in at least one end of 1 to 2 mm**" as claimed, since at a minimum, the cross section of the end is 2mm high or wide. (*Id.*; Ex. 1002, ¶212.) While *Fells* discloses such a configuration has a length of "30 mm" (which would be "**along a winding axis**" since that includes the coil as explained above (§§IX.A.1(f)-(i)), it would have been obvious to modify the *Fells'* system to use a magnetic core of smaller lengths, including those within the claimed range of 10mm

to 20mm, as a predictable design choice depending on the type of application, power transfer characteristics/functionalities sought by a POSITA designing/implementing an inductive power transfer system consistent with that taught by *Fells*. (Ex. 1002, ¶212.)

As explained, *Fells* teaches that its system can be configured using different arrangements, components, dimensions, etc., including for its receiver coil/solenoid and charger. (§§IX.A.1(a), IX.A.1(o); Ex. 1005, FIGS. 1(a), 19(a)-(b), 21, 1:50-6:3, 6:57-7:7, 7:16-8:9, 8:42-56, 10:60-11:44, 12:66-14, 14:32-22:33.) (*See also* §§IX.A.1(a)-(n), IX.A.1(p)-(q); Ex. 1002, ¶213.) Indeed, *Fells* describes various types of receiver magnetic cores, without any specific requirement to limit the core's dimensions. (Ex. 1005, FIGS. 19(a)-19(c), 20-21, 7:9-42, 10:60-11:25.) *Fells* even discloses receivers having shorter lengths (25 mm). (Ex. 1005, 7:22-24.) Thus, a POSITA would have appreciated that *Fells* contemplated different types and sized receivers, and associated magnetic cores. (Ex. 1002, ¶214.) Implementing a magnetic core with various lengths and end cross sections (including those with a 1 to 2mm end cross section and 10mm to 20mm length) would have been a predictable and obvious design option that would have been within the knowledge/rationale/capabilities of a POSITA when designing/implementing an inductive power transfer system consistent with that taught by *Fells* (especially given the versatility in such configurations). (*Id.*)

A POSITA would have thus had reasons to consider different magnetic core configurations, and possessed the skills to design and configure the above-discussed inductive transfer power system to accommodate various types of magnetic cores (including those with dimensions as claimed), and done so with an expectation that the resulting modified system would have successfully operated as intended and consistent with the functionalities/features contemplated by *Fells.* (*Id.*) Indeed, implementing the above-modification would have involved applying known technologies/techniques (*e.g.*, using a selected sized solenoid magnetic core to facilitate the flow of magnetic flux in the magnetic circuit formed in the power transfer system), consistent with that contemplated by *Fells*. (*Id.*) *KSR*, 550 at 416.

The above modification would have been obvious especially since the '349 patent describes such dimensions as examples without any discussion of criticality associated with such claimed dimensions. (Ex. 1001, 8:63-9:3 ("Litz wire ***can be*** wrapped around to the core to create a solenoid type receiver…(several mm or small by 10 or 20 mm)"…"[i]n ***one example***, the solenoid height…***can be varied*** from 10 to 20mm, but can be shorter.") (Ex. 1002, ¶ 215.) Moreover, the '349 patent's lack of disclosure of a "system" including all of the claimed features of claims 1 and 7 supports obviousness. "If this were so vital an element in the functioning of the apparatus, it is strange that all mention of it was omitted." *Graham v. John Deere Co. of Kansas City*, 383 U.S. 1, 25 (1966).

4. Claim 10

a) The system of claim 1, wherein the magnetic core of the solenoid comprises Ferrite material and the charger magnetic layer comprises Ferrite material.

Fells (including as modified above) discloses/suggests this limitation. (Ex. 1002, ¶¶216-218.) As explained, *Fells* discloses a "ferrite" backplate ("**charger magnetic layer compris[ing] Ferrite material**"). (§IX.A.1(d); Ex. 1005, FIGS. 1(b), 2-3 (below).

Fig. 2

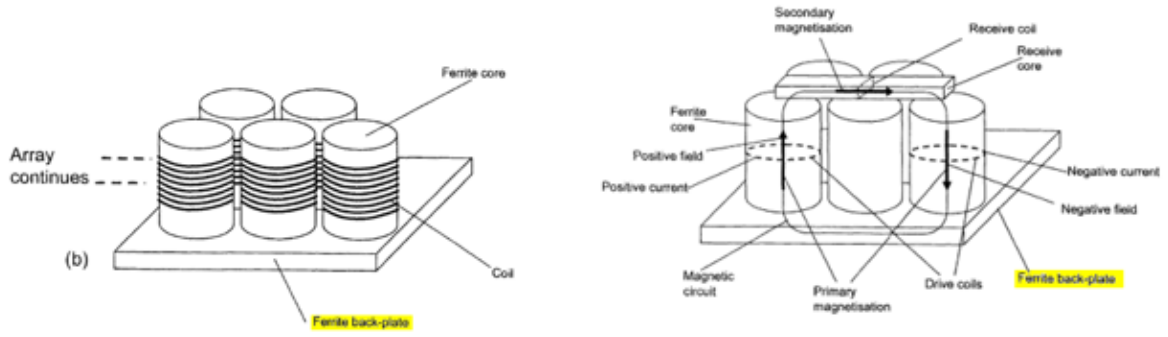

Fig. 3

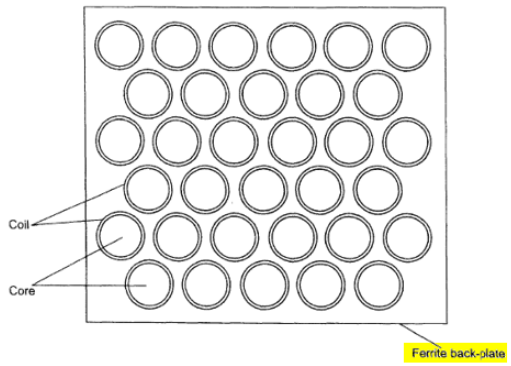

Fells also discloses that the "**magnetic core of the solenoid comprises Ferrite material**." (§§IX.A.1(g)-(h); Ex. 1005, FIG. 1(a) (below), 6:57-60 (receiver "has a ***ferrite core*** and coil wound around the core"), 8:26-32 ("presence of ***the ferrite in the receiver*** reduces the reluctance of the magnetic circuit compared to air" causing the "self-inductance of the pad coils in the vicinity of the receiver [to] increase").) (Ex. 1002, ¶¶217-218.)

Fig. 1

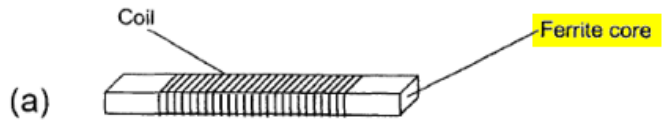

5. Claim 11

a) The system of claim 1, wherein a center of the first end of the solenoid is positioned 1 mm or more away from the charger surface when the receiver is positioned in the power transfer position.

Fells (including as modified above) discloses/suggests this limitation. (Ex. 1002, ¶¶219-221.) As explained for limitation 1(o)/26(m), *Fells* discloses configurations that include "***a power receiver which is 30 mm long with a cross section of 2 mm x 6 mm***." (Ex. 1005, 7:37-42; §IX.A.1(o).) *Fells* also explains that "[t]here are small gaps in the circuit between the charging surface and the power receiver because of the plastic housings on both the charging pad and the portable device." (*Id.*, 7:16-19.) "The thickness of the plastic should be minimized to reduce

this gap and ***gaps of 2mm or less*** are achievable." (*Id.*, 7:19-21.) Accordingly, in such configurations, regardless of the cross section of "**first end of the solenoid**" (but certainly when having the exemplary cross section sizes discussed above (and in §IX.A.1(o)), "**when the receiver is positioned in the power transfer position**" (§§IX.A.1(k)-(m), IX.A.1(q)), the "**center of the first end of the solenoid is positioned 1 mm or more away from the charger surface**," as claimed. (Ex. 1002, ¶220.)

This is true even if the receiver's solenoid's magnetic core is placed directly on the charger surface, because in at least one example as noted above (and demonstrated below), the cross section of an end is "2mm x 6mm" and thus in either orientation, the center of such a magnetic core (dashed red below) is also position "**1mm or more away from the charger surface**" (blue below). (Ex. 1002, ¶221.)

Fig. 1

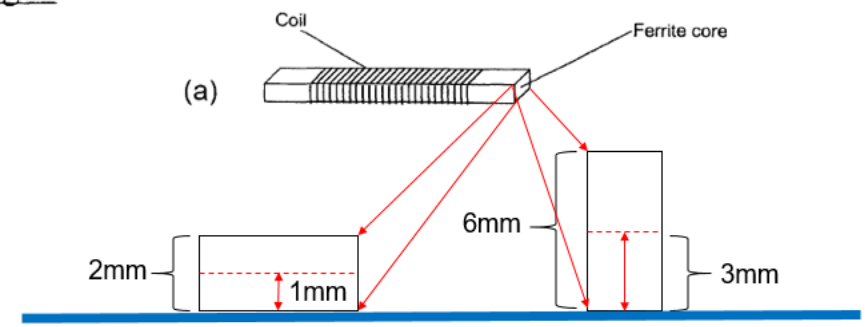

6. Claim 12

a) The system of claim 1, wherein when the receiver is positioned in the power transfer position, the magnetic core of the solenoid extends beyond the

> **charger coil area in a preferential direction and the charger magnetic layer is also extended in the preferential direction so that the magnetic flux returned during the provision of power to the mobile device flows from the solenoid back to the charger coil to close the magnetic loop.**

Fells (including as modified above) discloses/suggests this limitation. (Ex. 1002, ¶¶222-228; §§IX.A.1.)

As explained for claim 1, *Fells* discloses a magnetic backplate ("**magnetic layer**") that extends beyond the "**charger coil area**" (§§IX.A.1(o)-(p)) and when the receiver is in the power transfer position, a "**closed magnetic loop**" is formed for flux to flow between activated charger coils, the magnetic core of the receiver's solenoid and the magnetic backplate. (§IX.A.1(q); Ex. 1005, FIGS. 1(b), 2-3 (below).) (Ex. 1002, ¶223.)

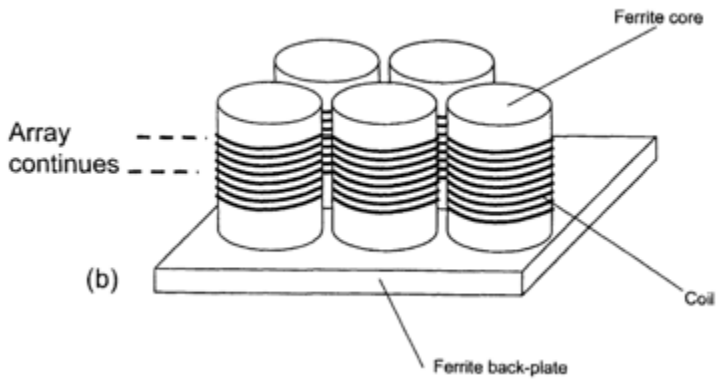

Fig. 2

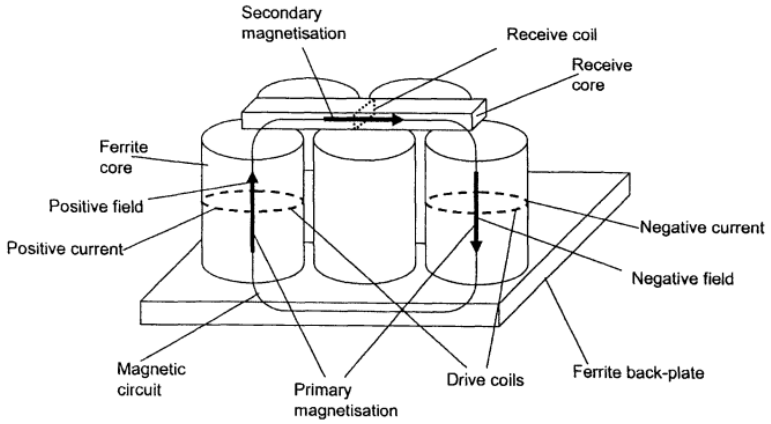

Fig. 3

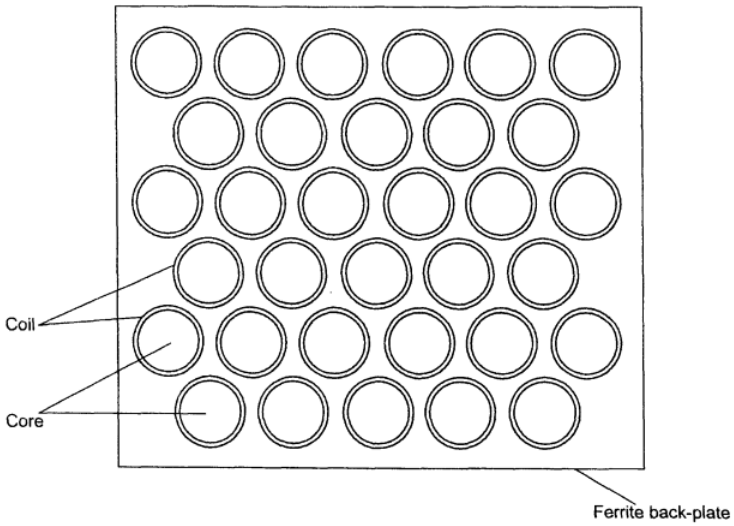

The receiver (and thus the solenoid's magnetic core) can be positioned such that it extends beyond an activated charger coil area. (Ex. 1005, FIGS. 5-7 (below, red circles showing examples of extensions past at least one activated charger coil area(s)), 7:31-67; Ex. 1002 ¶224.)

Fig. 5

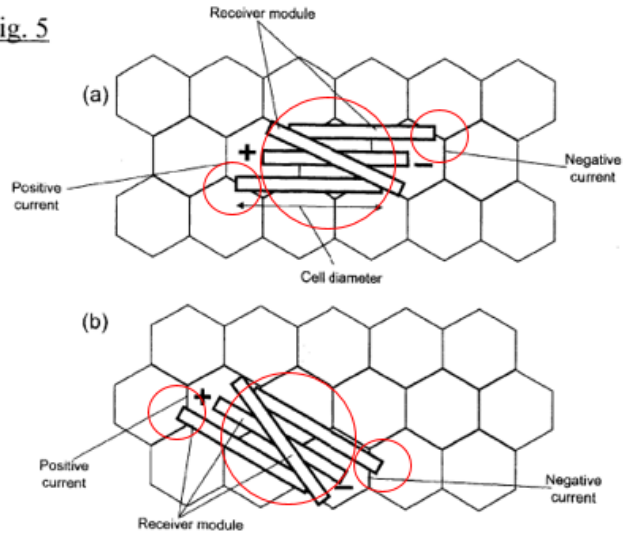
Receiver module
(a)
Positive current
Negative current
Cell diameter
(b)
Positive current
Negative current
Receiver module

Fig. 6

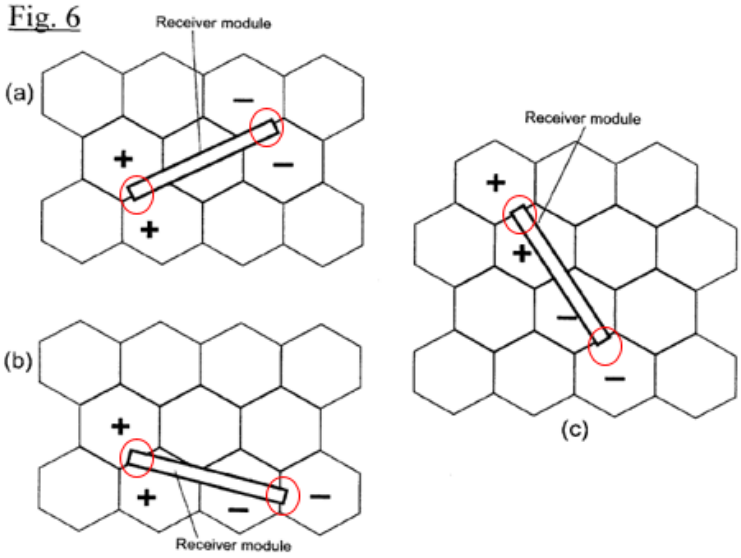
Receiver module
(a)
(b)
Receiver module
Receiver module
(c)

Fig. 7

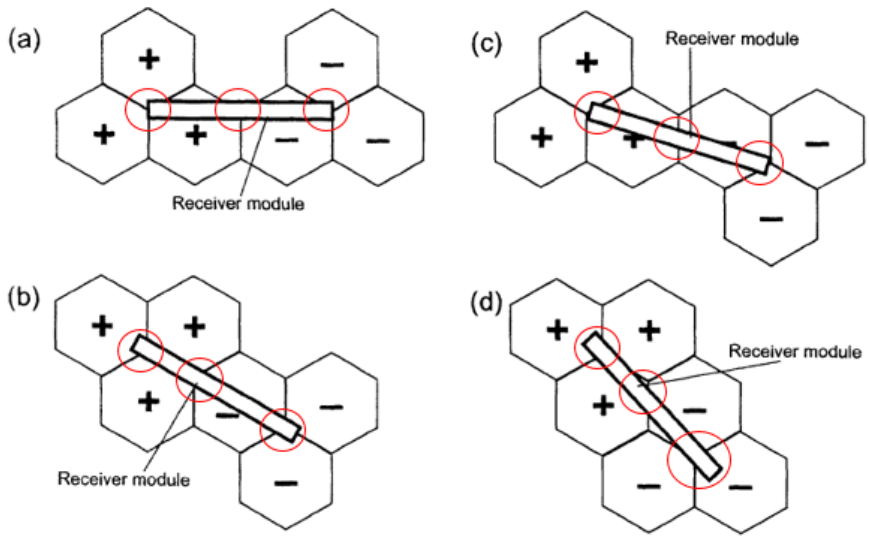

A POSITA would have thus understood *Fells* discloses configurations where the mobile device can be placed on the charger surface in certain orientations such that the "receiver is positioned in the power transfer position," resulting in the solenoid's magnetic core extends past *at least one* of the activated charger coils. (Ex. 1002, ¶225.) Likewise, a POSITA would have understood that the mobile device's placement is not limited to the center of the charger surface, and thus where the device is positioned at the edge of the charger surface, the magnetic core of the solenoid would necessarily extend (similar to that shown above) past an activated coil area (*see e.g.,* Ex. 1005, FIG. 5(b) above), while the magnetic backplate ("magnetic layer") remains extended in all directions in the charger coil array (*e.g., id.*, FIGS. 1(b), 2-3 above). (Ex. 1002, ¶225.)

A POSITA would have considered such extensions to be in a "**preferential direction**" since *e.g.,* the user of the mobile device/charger would have intentionally positioned the mobile device to facilitate charging, and such positions would have included those exemplified above. (Ex. 1002, ¶226.) Likewise, the ferrite backplane would have also been extended in the same "preferential" direction given it extends in all directions (including the direction the magnetic core is extended based on the placement of the mobile device on the charger surface). (*Id.*) A POSITA would have understood that in any of the exemplary orientations that resulted in such extended "preferential directions," **the magnetic flux returned during the provision of power to the mobile device flows from the solenoid back to the charger coil to close the magnetic loop**" in the same manner explained above for claim 1. (§§IX.A.1(o)-(q); Ex. 1002, ¶226.)

To the extent such features are not disclosed by *Fells*, it would have been obvious to configure the system in such a manner that provides for the magnetic flux to flow from the solenoid back to the charger coil to close the magnetic loop by positioning the magnetic coil such that it extends in a preferential direction like that claimed. (Ex. 1002, ¶¶227-228.) A POSITA would have been motivated to implement such features since it would have facilitated the inductive power transfer operations like those discussed by *Fells*, and for similar reasons explained for limitation 1(p)/26(n). (*Id.*; §IX.A.1(p) (*see* obviousness

analysis/rationale/expectation of success, incorporated here.) The resulting modification would have also included the "**magnetic layer**" extending in the same "**preferential direction**" for reasons explained above. (*See supra*; Ex. 1002, ¶228.)

The '349 patent provides no guidance as to the meaning of a "preferential direction" and does not disclose features claimed in claim 12. (*See generally* Ex. 1001.) Nor does the '349 patent disclose the "extended" aspects recited in the claim. (*Id.*) and does not require any particular direction /placement of the receiver (or its solenoid's magnetic core) (*e.g.,* Ex. 1001, 7:28-31 ("it may be preferable for one or more receivers to receive power when placed at a variety of locations or anywhere on or near a wireless charger area")). Such silence further supports the obviousness rationale explained above. *Graham*, 383 U.S. at 25.

B. Ground 2: Claim 4 is unpatentable as being obvious over *Fells* in view of *Jung*

1. Claim 4

a) The system of claim 1, wherein when the receiver is positioned in the power transfer position and when the charger is operated at an operating frequency near the resonance frequency of the tuned circuit to inductively transfer power from the charger to the receiver, the transfer of power from the charger to the receiver has a power transfer efficiency that exceeds 50%, wherein the power transfer efficiency is defined by power out of a rectifier in the receiver electronic circuit divided by power into the charger drive circuit.

Fells in view of *Jung* discloses/suggests this limitation. (Ex. 1002, ¶¶229-241; §IX.A.1.) The analysis for claim 1 demonstrates how *Fells*' system operates such that when the receiver of the mobile device is positioned in the "**power transfer position**," "**a tuned circuit**" is formed from the charger coil(s) and the resonant capacitor of the charger drive circuit and the solenoid and the resonant capacitor of the receiver electronic circuit, which has a resonant frequency that allows the **charger to inductively transfer the power to the receiver** at the one or more operating frequencies. (§§IX.A.1(e)-(j), IX.A.1(l).) For similar reasons, a POSITA would have understood when the receiver is in the "**power transfer position**" (explained above), the charger in *Fells* "**operat[es] at an operating frequency near the resonance frequency of the tuned circuit to inductively transfer power from the charger to the receiver**" since the receiver circuit in the mobile device has a resonant capacitor that is "resonant at the oscillator frequency" of the charger's resonant capacitor circuit (forming the "**tuned circuit**") (§IX.A.1(l)). (Ex. 1005, 9:46-67; Ex. 1002, ¶230.)

While *Fells* does not expressly disclose what the "**power transfer efficiency**" is (defined by the power out of "**a rectifier**" in the receiver electronic circuit (§IX.A.1(j)) divided by the power into the "**charger drive circuit**" (§IX.A.1(e)), a POSITA would have been motivated, and found obvious, to configure *Fells*' system (including components/circuits facilitating such transfer operations) to operate as

efficiently as possible for given applications. (Ex. 1002, ¶231.) Indeed, a POSITA would have appreciated that power transfer efficiency of inductive power transfer systems (as disclosed by *Fells*) can be measured from different perspectives, depending on desired system design/operating parameters, metrics, goals, etc. For example, a POSITA concerned with efficiency of power transferred between primary and secondary coils would have known to compare the power values between those components (*e.g.*, a ratio including the secondary coil power received / primary coil power generated/provided). (*Id.*)

Alternatively (or additionally), a POSITA would have also found it beneficial to determine/measure (or be concerned with) the power transfer efficiency from the perspective of the charger (*e.g.*, power provided into the charger driver circuitry) relative to the induced power provided to the mobile device's components (*e.g.*, battery). (*Id.*, ¶232.) A POSITA would have understood in receiver circuits with a rectifier used to convert received AC signals to DC (like that in *Fells* (Ex. 1005, FIG. 14)), one known way of determining such induced power would have been at the output of the rectifier (which is the source of the DC signals used to charge the battery). (*Id.*) Indeed, *Jung* discloses similar features from which a POSITA would have been motivated to consider when designing/implementing a system consistent with that of *Fells*. (*Id.*)

A POSITA would have had reasons to consider *Jung* in context of *Fells* since *Jung* describes an inductive power transfer system including techniques/technologies/configurations similar/related to those of *Fells.* (*See* §§IX.A.1(a)-(q); Ex. 1016, Abstract, FIGS. 1-18, 1:9-24; Ex. 1002, ¶233.) Thus, *Jung* is in the same field of endeavor as the '349 patent and *Fells*. (Ex. 1002, ¶234; Ex. 1001, 1:53-58. 3:28-6:14; Ex. 1016, Abstract, FIGS. 1-18, 1:9-23, 3:24-5:17, 6:22-8:67; *infra* (regarding *Jung-Fells*); *supra* §§IX.A.1(a)-(q) (regarding *Fells*).) Further, *Jung*, like *Fells*, also discloses features that were reasonable pertinent to one or more particular problems the inventor for the '349 patent and a POSITA was trying to solve. (Ex. 1002, ¶234, Ex. 1001, 1:53-2:38. 3:28-6:14; Ex. 1016, 2:35-5:18; Ex. 1005, 1:3-6:3; §§IX.A.1(a)-(q).) Such teachings thus would have been consulted by the inventor and a POSITA looking to address/solve such issues and others relating to the design/implementation of an inductive power transfer system, like that described by *Fells*. (Ex. 1002, ¶234.)

Jung discloses an inductive power transfer system that uses planar coils on a core base that transfers power to a portable device (*e.g.*, mobile phone) via a magnetic field that induces a current in a secondary core 51 of the device (power-receiving apparatus 50) for charging a battery cell. (Ex. 1016, FIGS. 1-4, 6, 17-18, Abstract, 3:23-5:19, 6:14-7:13, 7:38-8:67, 17:48-19:11; Ex. 1002 ¶235)

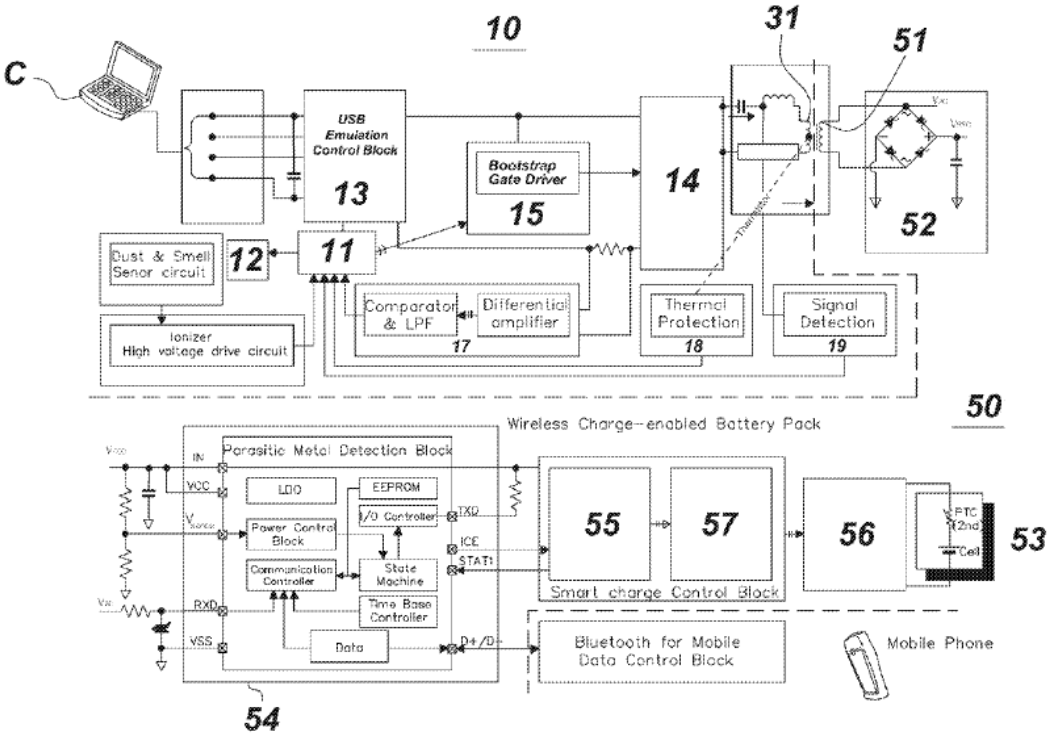

Fig. 1

Fig. 3

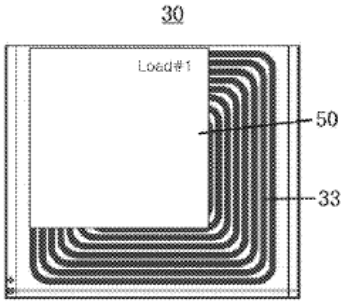

Fig. 4

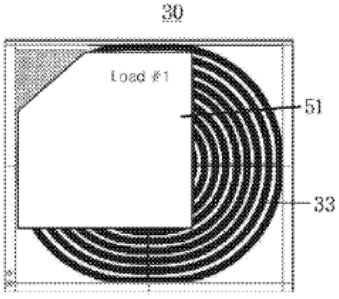

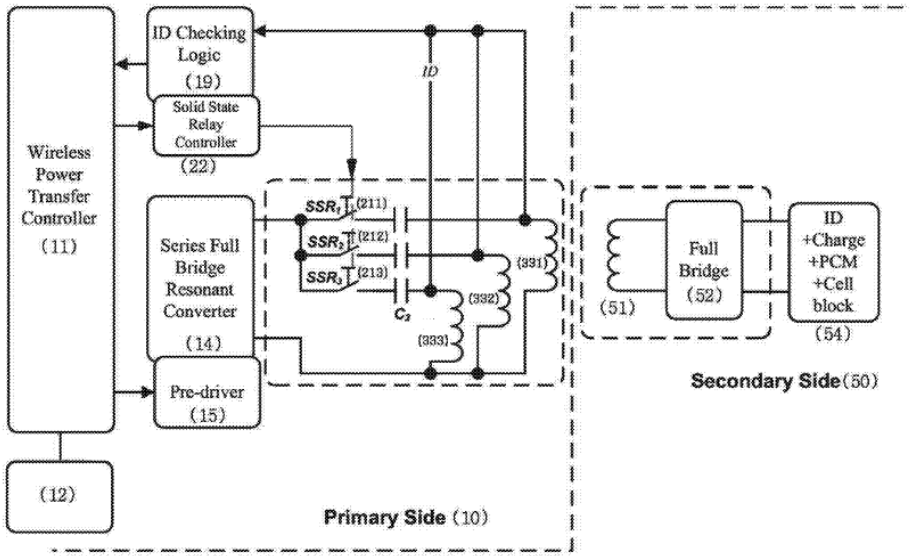

Fig. 6

(Ex. 1016, FIGS. 1, 3-4, 6.)

The core base can include multiple planar PCB cores that can be selectively activated to perform such power transfer operations. (*Id.*, FIGS. 7-9, 10:1-12:1, 12:42-13:20.) *Jung* discloses concerns for power transmission efficiency associated with the system and various aspects that can be implemented for improving power transmission efficiency, and describes power efficiencies relative to the primary and secondary side that exceed 50%. (*Id.*, 5:59-61, 9:12-30, 12:4-8, 13:21-17:47, FIG. 12 (below); Ex. 1002, ¶236.)

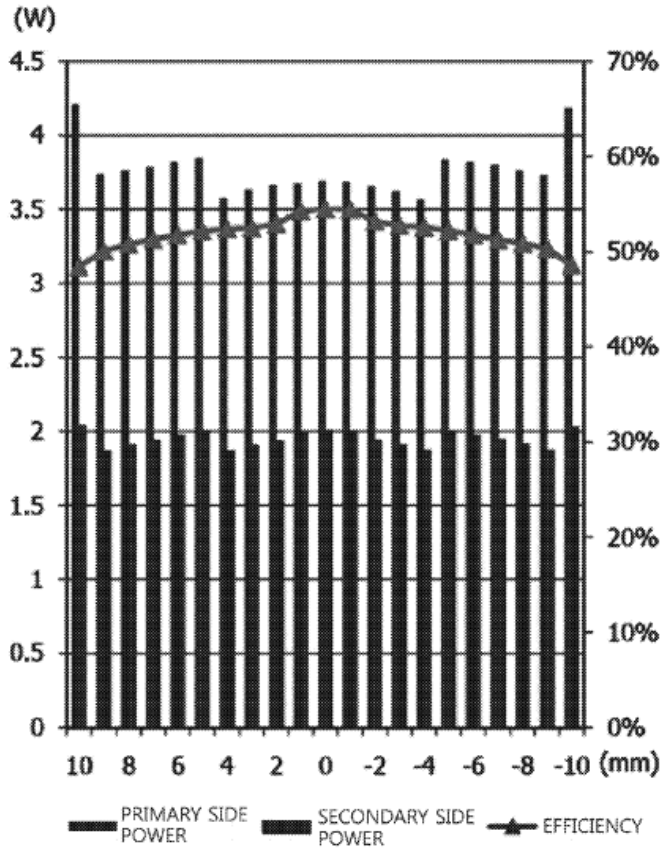

Fig. 12

(*See also* Ex. 1016, 14:24-15:17 (Table 3 ("efficiency" (53%, 60%))), 15:28-40 ("the efficiency" in Table 3 "indicate an efficiency….that is ***a ratio of power output from the secondary non-contact power-receiving apparatus 50 with respect to power input to the primary non-contact charging station 10*** for generating an induced magnetic field when load of 2.5W is applied to the secondary side").) *Jung* also discusses power efficiencies relative to the power measured from the mobile device's receiver circuit's ***rectifier*** that rectifies signals from secondary coil 51. (*Id.*, FIG. 1 (element 52), FIG. 6 (52), 13:14-14:15 ("voltage measured from the

rectifier", Table 1 ("DC voltage induced on secondary rectifier"), Table 2 ("energy efficiency").) (Ex. 1002, ¶236.)

Jung's teachings are consistent with the state of art knowledge of a POSITA concerning power efficiencies in inductive transfer systems. (Ex. 1002, ¶237; Ex. 1017, 1:15-4:16, 5:1-8 ("the method using electromagnetic induction may have a power utilization efficiency of approximately 60-98%"), 5:18-42 ("use of the method using magnetic resonance enables power transmission efficiency may increase by approximately 50-60%"), 14:37-50 ("[w]hen a power transmission uses a resonance, transmission efficiency is improved," which "may be about 90%" when the distance between source and receiver is 1 m); Ex. 1018, Abstract, 1-6, (discussing importance of impedance matching to the resonant frequency in inductive power transfer system to improve the efficiency of the system).)

In light of the teachings/suggestions of *Fells* and *Jung*, in context of the state of art knowledge (*supra*), a POSITA would have been motivated, and found obvious, to configure *Fells*' system components/arrangements such that the "**power transfer efficiency**" (determined by the power from the rectifier in the receiver (Ex. 1005, FIG. 14; §IX.A.1(j)) divided by the power into the charger drive circuit (§IX.A.1(e))) exceeds 50% in order to maximize/ensure efficient transfer of power during charging operations, as contemplated by *Fells*. (Ex. 1002, ¶238.) A POSITA would have been motivated to consider such power transfer efficiency levels when

designing/implementing a system consistent with that of *Fells* given it would have been within the mind and expectation of such a skilled person to provide a power transfer system that minimizes energy loss. (*Id.*) Such a POSITA would have had the skills, knowledge, and rationale to implement such a predictable modification given the known ways such systems can be configured to improve power transfer efficiencies, and the understanding that determining/assessing such efficiencies can be achieved from different perspectives of an inductive power transfer system (as disclosed/suggested by *Jung*). (*Id.,* ¶239.)

In light of such guidance and knowledge/skills, and the teachings/suggestions of *Jung*, a POSITA would have had a reasonable expectation of success that implementing such a modification. The modification would have resulted in an inductive power transfer system that operated with beneficial power transfer efficiency levels, when viewed from the perspective of the receiver's rectifier (which provides the DC power used to charge the device's battery) and the power input to the charger's driver circuit (which provides the signals used by the charger coils to generate the magnetic fields that induce current in the mobile device's coil, subsequently rectified by the device's rectifier). (*Id.*, ¶240) *KSR*, 550 U.S. at 416.

The '349 patent provides no details or associates any criticality to any particular features/components of the disclosed inductive transfer system that achieves the "power transfer efficiency" as claimed. (*See generally* Ex. 1001.) (Ex.

1002, ¶241.) Indeed, the '349 patent only mentions "efficiency" a handful of times, and does so without any detail or disclosure of "power transfer efficiency" defined as power out of a receiver circuit rectifier divided by power into the charger drive circuit, as claimed. (Ex. 1001, 6:45-48 (optional impedance matching circuits to "improve power transfer" without details), 8:14-15 ("high efficiency can be achieved"), 8:31-44 (exemplary flux guide geometry may result in "significant increase in power transfer efficiency" without defining how its measured), 10:1-24 (referring to power transfer efficiencies of up to 55% using exemplary coil configurations without defining how efficiency is measured), 10:30-36 (generically stating additional magnetic or ferrite material or layers can be added that "can provide higher [unspecified] efficiency and/or power"), 13:1-23 ("high power transfer efficiency" (without details), "efficient power transfer across from the transmitter to the receiver coil can be achieved" and "depending on the [unknown] size difference between coils and [unknown] operating points, efficiencies of over 50%...*have been reported*" [without indicating by whom or how measured]), 15:45-49 ("increase the efficiency of a wireless power system" without details).) Such lack of disclosure supports obviousness. "If this were so vital an element in the functioning of the apparatus, it is strange that all mention of it was omitted." *Graham*, 383 U.S. at 25.

C. Ground 3: Claims 1, 5, 7, 10-12, and 26 are unpatentable as being obvious over *Fells* in view of *Stoner* and *Nakamura*

Fells in view of *Stoner* and *Nakamura* discloses / suggests these claims. (Ex. 1002, ¶¶242-246.)

Fells discloses/suggests the limitations of claims 1, 5, 7, 10-12, and 26 for the reasons explained in §§IX.A.1 and IX.B.1. Regarding limitation 1(k)/26(e), §IX.A.1(k) demonstrates how *Fells* discloses the claimed "**means for positioning**" and alternatively how and why it would have been obvious to configure *Fells*' charger to include such a mechanism. (§IX.A.1(k).) That analysis references the teachings/suggestions of *Stoner* (Ex. 1011) and *Nakamura* (Ex. 1010) as state-of-art evidence supporting Dr. Baker's opinions regarding the knowledge of a POSITA at the time. (*Id.*) Here in Ground 3, Petitioners propose that a POSITA would have been motivated to consider the teachings/suggestions from *Stoner* and *Nakamura* to modify *Fells* to include magnetic and/or visual-based mechanism for assisting a user to align/position the receiver of the mobile device ("**means for positioning**"). (§IX.A.1(k) (including citations of *Stoner/Nakamura*); Ex. 1002, ¶243.) A POSITA would have had the same motivation, rationale, skills, knowledge, and expectation of success as explained in §IX.A.1(k) to modify *Fells* to include mechanism similar to those taught by *Stoner* and *Nakamura* (e.g., magnetic or visual-based means for positioning (Ex. 1010, FIGS. 8-9, ¶¶0102-0103; Ex. 1011, Abstract, FIGS. 1-4, 8, 11, 1:6-46, 2:14-4:62, 5:38-7:34, 10:46-12:35).) Thus, to the extent *Fells* does not

disclose/suggest the claimed "**means for positioning**" as recited in limitation 1(k)/26(e) (as explained in §IX.A.1(k)), a POSITA would have been motivated, and found obvious, to configure the *Fells* "charger" to include such a mechanism in light of the teachings/suggestions of *Stoner* and *Nakamura*, complimented by a POSITA's knowledge in the art. (Ex. 1002, ¶244.)

A POSITA would have had reasons to consider *Stoner-Nakamura* given they disclose inductive power transfer technologies/techniques similar to those disclosed by *Fells* (and thus are in the same field of endeavor as *Fells* and the '349 patent) and address similar problems as those addressed in the '349 patent and *Fells.* (*See* citations/discussion of *Fells* in §§IX.A.1-IX.B.1; *e.g.,* Ex. 1010, Abstract, ¶¶0002-0022, 0062-0124; Ex. 1011, Abstract, 1:5-4:62, 5:38-8:3, 8:26-9:42.) Upon consideration, and in context of *Fells*, a POSITA would have been motivated to modify *Fells*' charger to include similar alignment assistance mechanisms/means to ensure proper and efficient coupling occurs when the mobile device is placed on the charger surface. (§IX.A.1(k); Ex. 1002, ¶245.) *KSR*, 550 at 416. A POSITA would have considered the tradeoffs in such design options when contemplating ways to design/implement a charger with such features with *Fells*' system, including e.g., cost, weight, efficiency, etc., and the benefits provided by such alignment/positioning features/mechanisms for given applications. (Ex. 1002, ¶246.) Thus, for similar reasons explained for limitation 1(k)/26(e), a POSITA

would have found it obvious to configure *Fells*'s system with a "**means for positioning**" as claimed, (and had a similar expectation of success in its implementation). (*Id.*; §IX.A.1(k).) Accordingly, for the reasons here and referenced above in Ground 1, the *Fells-Stoner-Nakamura* combination discloses/suggests, and render obvious limitation 1(k)/26(e), and claims 1, 5, 7, 10-12, and 26.

D. Ground 4: Claim 4 is unpatentable as being obvious over *Fells* in view of *Stoner*, *Nakamura*, and *Jung*

The *Fells-Stoner-Nakamura* combination in view of *Jung* discloses/suggests the limitations of claim 4. (Ex. 1002, ¶¶247-250.) Ground 3 (and Ground 1 incorporated therein) demonstrate how *Fells* alone and/or as modified (including in view of *Stoner-Nakamura*) disclose and/or suggest the limitations of claim 1. (*See* §§IX.A.1, IX.C; Ex. 1002, ¶248.) Ground 2 explains how the *Fells-Jung* combination discloses and/or suggests the limitations of claim 4. (§IX.B; Ex. 1002, ¶248.)

Accordingly, for the same reasons, rationale, and teachings and suggestions explained in Grounds 1-3, a POSITA would have been further motivated, and found obvious, to configure and modify the above-discussed *Fells-Stoner-Nakamura* system to transfer power from the charger to the receiver with a power transfer efficiency that exceeds 50% (and its related claimed features) as recited in claim 4 for similar reasons discussed in light of the teachings/suggestions of *Jung* (and state

of art knowledge) explained in Ground 2 (§IX.B). (Ex. 1002, ¶249.) A POSITA would have had the same motivation, rationale, skills, knowledge, and reasonable expectation of success to consider and configure the *Fells-Stoner-Nakamura* system (as explained for Ground 3) based on the additional teachings/suggestions in *Jung* (consistent with the state-of-art knowledge) to implement features like those recited in claim 4 as explained above in §§IX.B and IX.C (and IX.A (incorporated therein)). (Ex. 1002, ¶250.) Accordingly, for similar reasons explained here and referenced above, the *Fells-Stoner-Nakamura-Jung* combination discloses/suggests, and render obvious claim 4.

X. DISCRETIONARY DENIAL IS NOT APPROPRIATE

Discretionary denial under §325(d) is not appropriate here given the prior art combinations and arguments raised during prosecution are not the same or substantially similar to the grounds presented herein. The Office did not consider the disclosures of *Fells* alone or in light of the teachings of *Jung, Stoner,* or *Nakamura*. (*See generally* Ex. 1004; Ex. 1001, Cover.) Indeed, the examiner allowed the '349 patent is issue without any substantive analysis of any of the prior art submitted by the applicant. (Ex. 1004, 113-116.) The Office/examiner thus erred in a manner pertinent to the patentability of the challenged claims by summarily allowing the now challenged claims without considering/applying the teachings/suggestions in at least *Fells*, or in view of the other prior art cited herein. Indeed, *Fells* discloses/suggests a majority of the features recited in the challenged claims, and thus is relevant to the patentability of the challenged claim(s) and to obviousness when considered alone or in light of *Jung*, *Stoner,* or *Nakamura*. (§IX.)

This is true even though another publication authored by Fells was submitted during prosecution. (Ex. 1001, Cover, (p.4); Ex. 1020 (*Fells-II*).) While *Fells-II* provides teachings consistent with the state of art knowledge of a POSITA, it is not entirely cumulative to *Fells* (Ex. 1005) since *Fells* includes different/additional disclosures that are material to the patentability of the challenged claims, including, *e.g.*, those relating to the various charger/charger coil/secondary coil/mobile device

configurations, among other things. (*Compare* Ex. 1005 *with* Ex. 1020; §IX.) Nonetheless, even if the two references are found to overlap in some aspects, the examiner erred by not substantively considering/applying any of such overlapping disclosures/teachings of *Fells-II* (*see* Ex. 1004) that are material to the patentability of the challenged claims. And as mentioned, *Fells* is provided in combination with the teachings of other prior art supported by expert testimony, which the examiner never considered in the manner presented herein. Accordingly, there is no basis to deny institution under §325(d).

The same is true despite *Nakamura* was cited in an IDS during prosecution. (Ex. 1004, 5.) As with other submitted references, the examiner erred in a manner pertinent to the patentability of the challenged claims by failing to consider and apply the teachings of *Nakamura* alone or in combination with other prior art. As demonstrated in §§IX.C-D, *Nakamura* at least discloses features relating to the "means for positioning" features recited in claims 1 and 26, and thus should have been considered in combination with other pertinent references (like those of *Fells*). Thus, the examiner erred in believing at the time that no prior art teaches/suggests "the combination of steps or elements in the claims" without considering the collective teachings/suggestions in the art presented here. Had the examiner done

so, the challenged claims would have likely not have issued.[17] Moreover, discretionary denial under §325(d) is inappropriate given *Nakamura* is applied in this petition to support an alternative obviousness position concerning the claimed "**means for positioning**" (§§IX.C-D), which is further supported by other prior art like *Stoner* (and expert testimony) never considered by the examiner.

Further, the *Fintiv* factors do not justify denying institution. *Apple Inc. v. Fintiv, Inc*., IPR2020-00019, Paper 11 (P.T.A.B. Mar. 20, 2020) (precedential).

The **first factor** (stay) is neutral, because Samsung has not yet moved for a stay. *See Hulu LLC v. SITO Mobile R&D IP, LLC et al.*, IPR2021-00298, Paper 11 at 10-11 (P.T.A.B. May 19, 2021).

The **second factor** (proximity) is neutral. "The PTAB will weigh this factor against exercising discretion to deny institution under *Fintiv* if the median time-to-trial is around the same time or after the projected statutory deadline for the PTAB's final written decision" (FWD). (Ex. 1022, 9.) The median time from filing to trial in the Eastern District of Texas is 19 months, meaning trial will be *no earlier* than May 2024 (Ex. 1023, 35), is close to the court's scheduled jury selection for August

[17] Petitioner reserves the right to seek leave to respond to any §325(d) (and §314) arguments that PO may raise in this proceeding to avoid institution.

5, 2024 (Ex. 1024, 1.) With this petition filed in June 2023, a FWD may be expected by December 2024, not long after the trial date.

That the FWD may come after the trial date is not dispositive. The Board has granted institution in cases where the FWD issued months after the scheduled trial date. The Board has relied on various justifications, such as diligence in filing the petition, a stipulation not to pursue the asserted grounds in litigation, minimal investment in litigation, and the merits of the invalidity challenge were strong. *Verizon Business Network Services, Inc. v. Huawei Techs. Co*., IPR2020-01141, Paper 12 (Jan. 14, 2021). The same factors are present in this case. For instance, Petitioner diligently filed this petition (challenging long, convoluted claims) in advance of the one-year bar date and within four months of PO's infringement contentions in the Texas Litigation. (Exs. 1021, 1025.) Fact discovery is not anticipated to close until March 18, 2024. (Ex. 1024, 3.) Expert discovery has not yet started. (*Id.*) And the *Markman* hearing has been scheduled for February 6, 2024, after the filing of this petition. (*Id.*)

The **third factor** (investment) also weighs against denial. The district court case is in the early stages. Fact discovery is in its infancy and the parties have not engaged in expert discovery. (Ex. 1024, 3.) The parties have not yet identified terms for construction. (*Id.*, 4-6.) Nor have there been any substantive orders in this case.

The **fourth factor** (overlap) also weighs against denial. Petitioner hereby stipulates that, if the IPR is instituted, Petitioner will not pursue the IPR grounds in the district court litigation. Thus, "[i]nstituting trial here serves overall system efficiency and integrity goals by not duplicating efforts and by resolving materially different patentability issues." *Apple, Inc. v. SEVEN Networks, LLC*, IPR2020-00156, Paper 10 at 19 (P.T.A.B. June 15, 2020); *see also Sand Revolution II, LLC v. Continental Intermodal Group-Trucking LLC*, IPR2019-01393, Paper 24 at 12 (P.T.A.B. June 16, 2020).

While the **fifth factor** (parties) may weigh slightly in favor of denial, because the Petitioner and PO are the same parties as in district court, based on a "holistic view," the factors favor institution. *Samsung Elecs. Co. Ltd. v. Dynamics Inc.*, IPR2020-00505, Paper 11 at 15 (P.T.A.B. Aug. 12, 2020).

Even if the Board determines that the above factors favor denial, the Board should not discretionarily deny institution, because this petition presents compelling merits. *See Commscope Tech. LLC v. Dali Wireless, Inc.*, IPR2022-01242, Paper 23 at 4-5 (P.T.A.B. Feb. 27, 2023) (precedential). As discussed above (§§VII, IX) the claimed features were known in the art, and in fact, are largely concepts/features used in inductive power systems (like that in *Fells*). (§IX) Moreover, this Petition is the ***sole*** challenge to the identified challenged claims before the Board—a "crucial

fact" favoring institution. *Google LLC v. Uniloc 2017 LLC*, IPR2020-00115, Paper 10 at 6 (May 12, 2020).

XI. CONCLUSION

Accordingly, Petitioner requests institution of IPR for the challenged claims based on the specified grounds.

Respectfully submitted,

Dated: June 27, 2023

By: / Joseph E. Palys/
Joseph E. Palys (Reg. No. 46,508)
Counsel for Petitioner

CERTIFICATE OF COMPLIANCE

Pursuant to 37 C.F.R. § 42.24(d), the undersigned certifies that the foregoing Petition for *Inter Partes* Review of U.S. Patent No. 11,292,349 contains, as measured by the word-processing system used to prepare this paper, 13,877 words. This word count does not include the items excluded by 37 C.F.R. § 42.24 as not counting towards the word limit.

Respectfully submitted,

Dated: June 27, 2023

By: / Joseph E. Palys/
Joseph E. Palys (Reg. No. 46,508)
Counsel for Petitioner

CERTIFICATE OF SERVICE

I hereby certify that on June 27, 2023, I caused a true and correct copy of the foregoing Petition for *Inter Partes* Review of U.S. Patent No. 11,292,349 and supporting exhibits to be served via express mail on the Patent Owner at the following correspondence address of record as listed on PAIR:

NK PATENT LAW
4101 LAKE BOONE TRAIL
SUITE 218
RALEIGH, NC 27607
UNITED STATES

By: /Joseph E. Palys/
Joseph E. Palys (Reg. No. 46,508)