US011292349B2

(12) **United States Patent**
Partovi

(10) **Patent No.: US 11,292,349 B2**
(45) **Date of Patent: Apr. 5, 2022**

(54) **SYSTEM AND METHOD FOR POWERING OR CHARGING RECEIVERS OR DEVICES HAVING SMALL SURFACE AREAS OR VOLUMES**

(71) Applicant: **Mojo Mobility Inc.**, Palo Alto, CA (US)

(72) Inventor: **Afshin Partovi**, Palo Alto, CA (US)

(73) Assignee: **Mojo Mobility Inc.**, Palo Alto, CA (US)

(*) Notice: Subject to any disclaimer, the term of this patent is extended or adjusted under 35 U.S.C. 154(b) by 0 days.

(21) Appl. No.: **17/467,032**

(22) Filed: **Sep. 3, 2021**

(65) **Prior Publication Data**

US 2022/0055489 A1 Feb. 24, 2022

Related U.S. Application Data

(63) Continuation of application No. 16/819,503, filed on Mar. 16, 2020, now Pat. No. 11,114,886, which is a (Continued)

(51) **Int. Cl.**
H02J 50/12 (2016.01)
H02J 50/40 (2016.01)
(Continued)

(52) **U.S. Cl.**
CPC ***B60L 53/12*** (2019.02); ***H01F 38/14*** (2013.01); ***H02J 50/12*** (2016.02); ***H02J 50/40*** (2016.02); ***H02J 50/70*** (2016.02); ***H02J 50/90*** (2016.02)

(58) **Field of Classification Search**
USPC 320/108
See application file for complete search history.

(56) **References Cited**

U.S. PATENT DOCUMENTS

3,938,018 A 2/1976 Dahl
4,311,853 A 1/1982 Cree
(Continued)

FOREIGN PATENT DOCUMENTS

EP 2396901 B1 12/2019
JP 408000838 8/1996
(Continued)

OTHER PUBLICATIONS

PCT International Search Report in connection with PCT application No. PCT/US2007/61406, 8 pages, dated Feb. 14, 2008.
(Continued)

Primary Examiner — Bryce M Aisaka

(57) **ABSTRACT**

A system for inductive power transfer includes a charger. The charger is an inductive charger. The system also includes a first mobile device that includes a receiver to inductively receive power for the first mobile device. A charger for inductive charging includes a printed circuit board having a charger coil, a substantially planar magnetic layer, a charger drive circuit, and means for positioning a receiver in a power transfer position. A mobile device that receives power inductively includes a receiver to inductively receive power for the mobile device. A method for inductive power transfer to a mobile device, which includes a receiver, includes positioning the receiver in a power transfer position to inductively receive power from an inductive charger. The method further includes inductively transferring power from the charger to the receiver of the first mobile device.

30 Claims, 12 Drawing Sheets

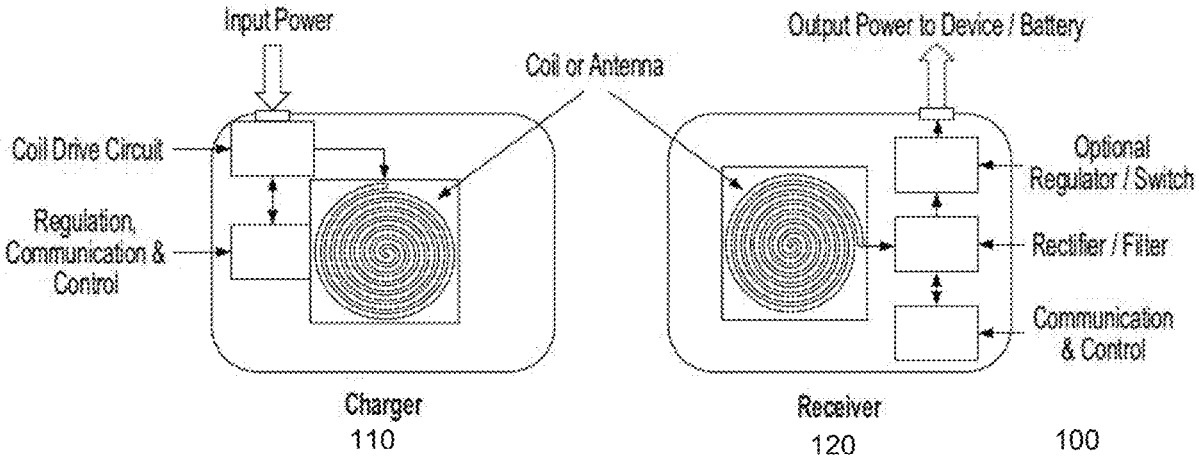

SAMSUNG EXHIBIT 1001

Related U.S. Application Data

continuation of application No. 15/830,411, filed on Dec. 4, 2017, now Pat. No. 10,594,155, which is a continuation of application No. 14/252,627, filed on Apr. 14, 2014, now Pat. No. 9,837,846.

(60) Provisional application No. 61/811,638, filed on Apr. 12, 2013.

(51) **Int. Cl.**

H02J 50/70	(2016.01)
H02J 50/90	(2016.01)
B60L 53/12	(2019.01)
H01F 38/14	(2006.01)

(56) **References Cited**

U.S. PATENT DOCUMENTS

4,311,953	A	1/1982	Fukuda
4,415,959	A	11/1983	Vinciarelli
4,720,667	A	1/1988	Lee et al.
4,731,585	A	3/1988	Fox
4,800,328	A	1/1989	Bolger
4,873,677	A	10/1989	Sakamoto et al.
5,237,257	A	8/1993	Johnson
5,311,973	A	5/1994	Tseng
5,367,242	A	11/1994	Hulman
5,434,493	A	7/1995	Woody
5,455,466	A	10/1995	Parks et al.
5,543,702	A	8/1996	Pfeiffer
5,550,452	A	8/1996	Shirai
5,600,225	A	2/1997	Goto
5,642,087	A	6/1997	Crow
5,656,917	A	8/1997	Theobald
5,696,433	A	12/1997	Palino
5,734,254	A	3/1998	Stephens
5,744,933	A	4/1998	Inoue
5,803,744	A	9/1998	Yen
5,889,384	A	5/1999	Hayes
5,925,814	A	7/1999	Tsuzuki
5,952,814	A	9/1999	Van Lerberghe
5,959,433	A	9/1999	Rohde
5,963,012	A	10/1999	Garcia
5,991,170	A	11/1999	Nagai
5,991,665	A	11/1999	Wang
6,008,622	A	12/1999	Nakawatase
6,016,046	A	1/2000	Kaile et al.
6,028,413	A	2/2000	Brockmann
6,040,680	A	3/2000	Toya et al.
6,057,668	A	5/2000	Chao
6,094,119	A	7/2000	Reznik
6,118,249	A	9/2000	Brockman et al.
6,184,651	B1	2/2001	Fernandez et al.
6,184,654	B1	2/2001	Bachner
6,208,115	B1	3/2001	Binder
6,301,128	B1	10/2001	Jang et al.
6,310,465	B2	10/2001	Najima
6,331,744	B1	12/2001	Chen
6,436,299	B1	8/2002	Baarman
6,462,509	B1	10/2002	Abe
6,489,745	B1	12/2002	Koreis
6,498,455	B2	12/2002	Zink
6,501,364	B1	12/2002	Hui
6,573,817	B2	6/2003	Gottschalk
6,586,909	B1	7/2003	Trepka
6,625,477	B1	9/2003	Wakefield
6,636,017	B2	10/2003	Zink et al.
6,650,088	B1	11/2003	Webb
6,673,250	B2	1/2004	Kuennen
6,697,272	B2	2/2004	Nanbu
6,731,071	B2	5/2004	Baarman
6,741,064	B2	5/2004	Liu
6,756,765	B2	6/2004	Bruning
6,798,716	B1	9/2004	Charych
6,803,744	B1	10/2004	Sabo
6,803,774	B2	10/2004	Park
6,806,649	B2	10/2004	Mollema
6,812,645	B2	11/2004	Baarman
6,825,620	B2	11/2004	Kuennen
6,831,417	B2	12/2004	Baarman
6,831,544	B2	12/2004	Patel et al.
6,844,702	B2	1/2005	Giannopoulos
6,870,089	B1	3/2005	Gray
6,888,438	B2	5/2005	Hui
6,906,495	B2	6/2005	Cheng
6,913,477	B2	7/2005	Dayan
6,917,163	B2	7/2005	Baarman
6,917,182	B2	7/2005	Burton
6,943,733	B2	9/2005	Vance
6,972,543	B1	12/2005	Wells
6,975,198	B2	12/2005	Baarman
7,026,789	B2	4/2006	Bozzone
7,031,662	B2	4/2006	Suzuki
7,042,196	B2	5/2006	Ka-Lai
7,116,200	B2	10/2006	Baarman
7,118,240	B2	10/2006	Baarman
7,126,450	B2	10/2006	Baarman
7,132,918	B2	11/2006	Baarman
7,151,357	B2	12/2006	Xian
7,162,264	B2	1/2007	Vance
7,164,245	B1	1/2007	Chen
7,164,255	B2	1/2007	Hui
7,183,870	B2	2/2007	Takagi
7,184,706	B2	2/2007	Someya
7,209,084	B2	4/2007	Lindell
7,211,986	B1 *	5/2007	Flowerdew H02J 7/0045 320/108
7,221,919	B2	5/2007	Takagi
7,239,110	B2	7/2007	Cheng
7,248,017	B2	7/2007	Cheng et al.
7,305,258	B2	12/2007	Rydgren
7,311,526	B2	12/2007	Rohrbach
7,324,051	B2	1/2008	Hayes
7,336,054	B2	2/2008	Crisp
7,342,539	B2	3/2008	Rosenberg
7,352,567	B2	4/2008	Hotelling et al.
7,355,150	B2	4/2008	Baarman
7,375,493	B2	5/2008	Calhoon et al.
7,376,408	B2	5/2008	Hayes
7,378,817	B2	5/2008	Calhoon
7,382,636	B2	6/2008	Baarman
7,385,357	B2	6/2008	Kuennen
7,388,543	B2	6/2008	Vance
7,399,202	B2	7/2008	Dayan
7,415,248	B2	8/2008	Andersson et al.
7,443,135	B2	10/2008	Cho
7,462,951	B1	12/2008	Baarman
7,477,195	B2	1/2009	Vance
7,487,921	B2	2/2009	Takahashi
7,495,414	B2	2/2009	Hui
7,498,871	B2	3/2009	Ruuswik
7,525,283	B2	4/2009	Cheng
7,554,316	B2	6/2009	Stevens
7,576,514	B2	8/2009	Hui
7,605,496	B2	10/2009	Stevens
D603,603	S	11/2009	Laine
D607,879	S	1/2010	Ferber
7,645,143	B2	1/2010	Rohrbach
D611,407	S	3/2010	Webb
D611,408	S	3/2010	Ferber
7,733,215	B2	6/2010	Kozuma et al.
7,741,734	B2	6/2010	Joannopoulos
7,781,916	B2	8/2010	Boys
D624,316	S	9/2010	Ferber
7,804,054	B2	9/2010	Shalom
D625,721	S	10/2010	Ferber
7,825,543	B2	11/2010	Karalis
7,855,529	B2	12/2010	Liu
7,872,445	B2	1/2011	Hui
7,906,936	B2	3/2011	Azancot
7,915,858	B2	3/2011	Liu
D636,333	S	4/2011	Kulikowski
7,948,208	B2	5/2011	Partovi
7,952,322	B2	5/2011	Partovi

(56) **References Cited**

U.S. PATENT DOCUMENTS

D639,734	S	6/2011	Ferber
8,035,255	B2	10/2011	Kurs
8,040,103	B2	10/2011	Hui
8,049,370	B2	11/2011	Azancot
8,050,068	B2	11/2011	Hussmann
8,069,100	B2	11/2011	Taylor et al.
8,234,189	B2	1/2012	Taylor et al.
8,115,448	B2	2/2012	John
8,169,185	B2	5/2012	Partovi et al.
8,234,509	B2	7/2012	Gioscia et al.
8,290,463	B2	10/2012	Liu et al.
8,554,165	B2	10/2013	Liu et al.
8,947,047	B2	2/2015	Partovi et al.
9,276,437	B2	3/2016	Partovi et al.
9,407,327	B2	8/2016	Kirby et al.
9,601,943	B2	3/2017	Partovi et al.
9,793,738	B2	10/2017	Jacobs et al.
10,044,229	B2	8/2018	Partovi et al.
2002/0004167	A1	1/2002	Jenson
2002/0067238	A1	6/2002	Leu
2002/0089305	A1	7/2002	Park
2002/0093309	A1	7/2002	Peele
2003/0094921	A1	5/2003	Lau
2003/0103039	A1	6/2003	Burr
2003/0210106	A1	11/2003	Cheng
2003/0214255	A1	11/2003	Baarman
2004/0113589	A1	6/2004	Crisp
2004/0130915	A1	7/2004	Baarman
2004/0130916	A1	7/2004	Baarman
2004/0145342	A1	7/2004	Lyon
2004/0145343	A1	7/2004	Naskali
2004/0150934	A1	8/2004	Baarman et al.
2004/0222751	A1	11/2004	Mollema
2004/0232845	A1	11/2004	Baarman
2005/0007067	A1	1/2005	Baarman
2005/0017677	A1	1/2005	Burton
2005/0063488	A1	3/2005	Troyk
2005/0068019	A1	3/2005	Nakamura et al.
2005/0075696	A1	4/2005	Forsberg
2005/0093475	A1	5/2005	Kuennen
2005/0116650	A1	6/2005	Baarman
2005/0116683	A1	6/2005	Cheng
2005/0122058	A1	6/2005	Baarman
2005/0122059	A1	6/2005	Baarman
2005/0127849	A1	6/2005	Baarman
2005/0127850	A1	6/2005	Baarman
2005/0127867	A1	6/2005	Calhoon
2005/0127869	A1	6/2005	Calhoon
2005/0135122	A1	6/2005	Cheng
2005/0140482	A1	6/2005	Cheng
2005/0162125	A1	7/2005	Yu
2005/0189910	A1	9/2005	Hui
2006/0021926	A1	2/2006	Woodard
2006/0038794	A1	2/2006	Schneidman
2006/0105718	A1	5/2006	Ozluturk
2006/0106965	A1	5/2006	Falcon
2006/0108977	A1	5/2006	Kagermeier
2006/0132045	A1	6/2006	Baarman
2006/0146517	A1	7/2006	Park
2006/0202665	A1	9/2006	Hsu
2006/0205381	A1	9/2006	Beart
2006/0238930	A1	10/2006	Baarman
2006/0284593	A1	12/2006	Nagy
2007/0029965	A1	2/2007	Hui
2007/0069687	A1	3/2007	Suzuki
2007/0103110	A1	5/2007	Sagoo
2007/0109708	A1	5/2007	Hussman
2007/0139000	A1	6/2007	Kozuma
2007/0178945	A1	8/2007	Cook et al.
2007/0182367	A1	8/2007	Partovi
2007/0236174	A1	10/2007	Kaye
2007/0279002	A1	12/2007	Partovi
2007/0296393	A1	12/2007	Malpas
2008/0014897	A1	1/2008	Cook
2008/0061733	A1	3/2008	Toya
2008/0067874	A1	3/2008	Tseng
2008/0164839	A1	7/2008	Kato
2008/0247210	A1	10/2008	Hu
2008/0258679	A1	10/2008	Manico
2008/0272889	A1	11/2008	Symons
2008/0278264	A1	11/2008	Karalis
2009/0015075	A1	1/2009	Cook
2009/0033564	A1	2/2009	Cook
2009/0043727	A1	2/2009	Cohen, Jr.
2009/0049554	A1	2/2009	Vuong
2009/0058189	A1	3/2009	Cook
2009/0072627	A1	3/2009	Cook
2009/0072628	A1	3/2009	Cook
2009/0072629	A1	3/2009	Cook
2009/0079268	A1	3/2009	Cook
2009/0096413	A1	4/2009	Partovi
2009/0102292	A1	4/2009	Cook
2009/0127937	A1	5/2009	Widmer
2009/0134712	A1	5/2009	Cook
2009/0167449	A1	7/2009	Cook
2009/0174263	A1	7/2009	Baarman et al.
2009/0195332	A1	8/2009	Joannopoulos
2009/0195333	A1	8/2009	Joannopoulos
2009/0212636	A1	8/2009	Cook
2009/0212637	A1	8/2009	Baarman et al.
2009/0212639	A1	8/2009	Johnson
2009/0213028	A1	8/2009	Cook
2009/0224608	A1	9/2009	Cook
2009/0224609	A1	9/2009	Cook
2009/0224856	A1	9/2009	Karalis
2009/0243397	A1	10/2009	Cook
2009/0257259	A1	10/2009	Leibovitz
2009/0267709	A1	10/2009	Joannopoulos
2009/0267710	A1	10/2009	Joannopoulos
2009/0284083	A1	11/2009	Karalis
2009/0284227	A1	11/2009	Mohammadian
2010/0007307	A1	1/2010	Baarman
2010/0038970	A1	2/2010	Cook
2010/0066176	A1	3/2010	Azancot
2010/0070219	A1	3/2010	Azancot
2010/0072825	A1	3/2010	Azancot
2010/0073177	A1	3/2010	Azancot
2010/0081473	A1	4/2010	Chatterjee
2010/0096934	A1	4/2010	Joannopoulos
2010/0102639	A1	4/2010	Joannopoulos
2010/0102640	A1	4/2010	Joannopoulos
2010/0102641	A1	4/2010	Joannopoulos
2010/0109443	A1	5/2010	Cook
2010/0109445	A1	5/2010	Kurs
2010/0117454	A1	5/2010	Cook
2010/0117455	A1	5/2010	Joannopoulos
2010/0117456	A1	5/2010	Karalis
2010/0117596	A1	5/2010	Cook
2010/0123353	A1	5/2010	Joannopoulos
2010/0123354	A1	5/2010	Joannopoulos
2010/0123355	A1	5/2010	Joannopoulos et al.
2010/0127573	A1	5/2010	Joannopoulos
2010/0127574	A1	5/2010	Joannopoulos
2010/0127575	A1	5/2010	Joannopoulos
2010/0127660	A1	5/2010	Cook
2010/0133918	A1	6/2010	Joannopoulos
2010/0133919	A1	6/2010	Joannopoulos
2010/0133920	A1	6/2010	Joannopoulos
2010/0141042	A1	6/2010	Kesler
2010/0148589	A1	6/2010	Hamam
2010/0164296	A1	7/2010	Kurs
2010/0164297	A1	7/2010	Kurs
2010/0164298	A1	7/2010	Karalis
2010/0171368	A1	7/2010	Schatz
2010/0171369	A1	7/2010	Taylor et al.
2010/0181841	A1	7/2010	Azancot
2010/0181843	A1	7/2010	Schatz
2010/0181845	A1	7/2010	Fiorello
2010/0184371	A1	7/2010	Cook
2010/0187911	A1	7/2010	Joannopoulos
2010/0190435	A1	7/2010	Cook
2010/0190436	A1	7/2010	Cook
2010/0194336	A1	8/2010	Azancot
2010/0201313	A1	8/2010	Vorenkamp

(56) **References Cited**

U.S. PATENT DOCUMENTS

2010/0207572	A1	8/2010	Kirby
2010/0207771	A1	8/2010	Trigiani
2010/0213895	A1	8/2010	Keating
2010/0219183	A1	9/2010	Azancot
2010/0219693	A1	9/2010	Azancot
2010/0219697	A1	9/2010	Azancot
2010/0219698	A1	9/2010	Azancot
2010/0235006	A1	9/2010	Brown
2010/0244584	A1	9/2010	Azancot
2010/0253281	A1	10/2010	Li
2010/0253282	A1	10/2010	Azancot
2010/0257382	A1	10/2010	Azancot
2010/0259401	A1	10/2010	Azancot
2010/0277120	A1	11/2010	Cook
2010/0277121	A1	11/2010	Hall
2010/0314946	A1	12/2010	Budde
2010/0327804	A1	12/2010	Takahashi
2011/0012556	A1	1/2011	Lai
2011/0050164	A1	3/2011	Partovi
2011/0057606	A1	3/2011	Saunamaki
2011/0062793	A1	3/2011	Azancot
2011/0090723	A1	4/2011	Hu
2011/0095617	A1	4/2011	Cook
2011/0115430	A1	5/2011	Saunamaki
2011/0121660	A1	5/2011	Azancot
2011/0157137	A1	6/2011	Ben-Shalom
2011/0187318	A1	8/2011	Hui
2011/0193520	A1	8/2011	Yamazaki
2011/0217927	A1	9/2011	Ben-Shalom
2011/0221387	A1	9/2011	Steigerwald
2011/0221391	A1	9/2011	Won
2011/0222493	A1	9/2011	Mangold
2011/0266878	A9	11/2011	Cook
2012/0041843	A1	2/2012	Taylor et al.
2012/0047972	A1*	3/2012	Grant E05B 73/0017 70/77
2012/0049991	A1	3/2012	Baarman
2012/0112552	A1	5/2012	Baarman et al.
2012/0119588	A1	5/2012	Baarman et al.
2012/0126745	A1	5/2012	Partovi
2012/0146576	A1	6/2012	Partovi
2012/0150670	A1	6/2012	Taylor et al.
2012/0235636	A1	9/2012	Partovi
2012/0259735	A1	10/2012	Taylor et al.
2014/0339916	A1	11/2014	Fells et al.

FOREIGN PATENT DOCUMENTS

JP	2000341885		12/2000
JP	2003045731	A1	2/2003
JP	2006500894		1/2006
JP	2006246633		9/2006
JP	2009200174		9/2009
KR	100836634		4/2008
WO	2003096361		11/2003
WO	2003096512		11/2003
WO	2003105308		12/2003
WO	20030105311		12/2003
WO	2004030176		4/2004
WO	2004038887		5/2004
WO	2004038888		5/2004
WO	2004055654		7/2004
WO	2005024865		3/2005
WO	2005109597		11/2005
WO	2005109598		11/2005
WO	200601557	A1	1/2006
WO	2008137996		11/2008
WO	20110156768		12/2011
WO	201200116054		8/2012

OTHER PUBLICATIONS

PCT International Search Report in connection with PCT application No. PCT/US2008/63084, 8 pages, dated Aug. 3, 2008.

Office Action in connection with U.S. Appl. No. 13/442,698 dated Sep. 13, 2012, 6 pages.

Office Action in connection with U.S. Appl. No. 12/116,876 dated May 2, 2011, 5 pages.

Office Action in connection with U.S. Appl. No. 11/669,113 dated May 13, 2010, 20 pages.

Office Action in connection with U.S. Appl. No. 11/669,113 dated Aug. 25, 2009, 17 pages.

Office Action in connection with U.S. Appl. No. 11/669,113 dated Oct. 29, 2008, 11 pages.

Office Action in connection with U.S. Appl. No. 13/113,977 dated Nov. 9, 2012, 9 pages.

International Search Report and Written Opinion of the International Searching Authority, Korean Intellectual Property Office, in re International Application No. PCT/US2010/032845 dated Dec. 13, 2010, 10 pages.

WildCharge Life unplugged!. http://www.wildcharg.com/4/17/2009, 2 pages.

Powermat "the Future of Wireless Power has Arrived", http://www.pwrmal.com,Apr. 15, 2009, 2 pages.

ECoupled Wireless Power Technology Fulton Innovation, http://www.ecoupled.com, Apr. 15, 2009, 5 pages.

Qualcomm Products and Services—Wirelss Airlink Technologies, http://www.qualcomm.com/products_services/airlinks, Apr. 15, 2009, 4 pages.

Office Action in connection with U.S. Appl. No. 11/757,067 dated Jan. 26, 2009, 14 pages.

Office Action in connection with U.S. Appl. No. 11/757,067 dated Oct. 19, 2009, 14 pages.

Office Action in connection with U.S. Appl. No. 11/757,067 dated May 10, 2010, 15 pages.

Japanese Patent Office, Office Action for Japanese Patent Application No. 2010-507666, dated Mar. 9, 2015, 8 pages.

Japanese Patent Office, Office Action for Japanese Patent Application No. 2014-104181, dated Mar. 23, 2015, 14 pages.

United States Patent and Trademark Office, Office Action for U.S. Appl. No. 13/830,161, dated Apr. 16, 2015, 24 pages.

Japanese Patent Office, Examiner's Reconsideration Report for Japanese Patent Application No. 2010-507666, dated Jul. 17, 2014, 1 page.

The Patent Office of the People's Republic of China, 2nd Office Action for Chinese Patent Application No. 200880023854.4, dated Apr. 15, 2013, 4 pages.

Unknown Author, System Description Wireless Power Transfer, vol. 1: Low Power Part 1: Interface Definition, Version 1.0, Jul. 2010, 83 pages.

United States Patent and Trademark Office, Office Action for U.S. Appl. No. 13/829,346, dated Feb. 12, 2015, 10 pages.

United States Patent and Trademark Office, Office Action for U.S. Appl. No. 13/829,186, dated Jan. 23, 2015, 12 pages.

United States Patent and Trademark Office, Office Action for U.S. Appl. No. 13/828,933, dated Feb. 5, 2015, 11 pages.

United States Patent and Trademark Office, Office Action for U.S. Appl. No. 13/352,096, dated Aug. 18, 2014, 14 pages.

United States Patent and Trademark Office, Office Action for U.S. Appl. No. 13/708,584, dated Jan. 23, 2015, 25 pages.

United States Patent and Trademark Office, Office Action for U.S. Appl. No. 12/769,586, dated Jun. 2, 2014, 23 pages.

United States Patent and Trademark Office, Office Action for U.S. Appl. No. 13/708,520, dated Aug. 14, 2014, 9 pages.

United States Patent and Trademark Office, Office Action for U.S. Appl. No. 13/115,811, dated Aug. 20, 2014, 20 pages.

United States Patent and Trademark Office, Office Action for U.S. Appl. No. 14/135,082, dated Dec. 5, 2014, 14 pages.

United States Patent and Trademark Office, Office Action for U.S. Appl. No. 13/708,520, dated Mar. 11, 2015, 10 pages.

International Searching Authority at the U.S. Patent and Trademark Office, International Search Report and Written Opinion for PCT International Patent Application No. PCT/US2013/078534, dated May 13, 2014, 11 pages.

International Searching Authority and Written Opinion From the U.S. Patent and Trademark Office, International Search Report and

(56) **References Cited**

OTHER PUBLICATIONS

Written Opinion for PCT International Application No. PCT/US2013/069270, dated Apr. 4, 2014, 9 pages.
Hui, "A New Generation of Universal Contactless Battery Charging Platform for Portable Consumer Electronic Equipment", IEEE Transactions on Power Electronics, vol. 20, No. 3, May 2005, pp. 620-627, 8 pages.
Tang, et al., "Evaluation of the Shielding Effects on Printed-Circuit-Board Transformers Using Ferrite Plates and Copper Sheets", IEEE Transactions on Power Electronics, vol. 17, No. 6, Nov. 2002, pp. 1080-1088, 9 pages.
Liu, et al., "An Analysis of a Double-Layer Electromagnetic Shield for a Universal Contactless Battery Charging Platform", Department of Electronic Engineering City University of Hong Kong, IEEE, 2005, pp. 1767-1772, 6 pages.
Liu, et al., Equivalent Circuit Modeling of a Multilayer Planar Winding Array Structure for Use in a Universal Contactless Battery Charging Platform, IEEE Transactions on Power Electronics, vol. 22, No. 1, Jan. 2007, pp. 21-29, 9 pages.
Liu, et al., "Simulation Study and Experimental Verification of a Universal Contactless Battery Charging Platform with Localized Charging Features", IEEE Transactions on Power Electronics, vol. 22, No. 6, Nov. 2007, pp. 2202-2210, 9 pages.
Liu, et al., "Optimal Design of a Hybrid Winding Structure for Planar Contaclless Battery Charging Platform", IEEE Transactions on Power Electronics, vol. 23, No. 1, Jan. 2008, pp. 455-463, 9 pages.
Karalis, et al., "Efficient Wirelss Non-Radiative Mid-Range Energy Transfer", ScienceDirect, Annals of Physics 323, 2008, pp. 34-48, 15 pages.
Su, et al., "Mutual Inductance Calculation of Movable Planar Coils on Parallel Surfaces", IEEE Transactions on Power Electronics, vol. 24, No. 4, Apr. 2009, pp. 1115-1124, 10 pages.
Hui, et al., "Careless Printed Circuit Board (PCB) Transformers—Fundamental Characteristics and Application Potential", IEEE Circuits and Systems, Vo. 11, No. 3, Third Quarter 2000, pp. 1-48, 48 pages.
Sekitani, et al., "A Large-Area Flexible Wireless Power Transmission Sheet Using Printed Plastic MEMS Switches and Organic Field-Effect Transistors", IEEE, Quantum-Phase Electronics Center, School of Engineering, The University of Tokyo, 2006, 4 pages.
Choi, et al., "A New Contactless Battery Charger for Portable Telecommunication/Compuing Electronics", IEEE, School of Electronic and Electrical Engineering, Kyungpook National University, Taegu, Korea, 2011, pp. 58-59 2 pages.
Hui, et al., "Careless Printed Circuit Board (PCB) Transformers for Power MOSFET/IGBT Gate Drive Circuits", IEEE Transactions on Power Electronics, vol. 14, No. 3, May 1999, pp. 422-430, 9 pages.
Tang, et al., "Careless Planar Printed-Circuit-Board (PCB) Transformers—A Fundamental Concept for Signal and Energy Transfer", IEEE Transactions on Power Electronics, vol. 15, No. 5, Sep. 2000, pp. 931-941, 11 pages.
Hatanaka, et al.. "Power Transmission of a Desk with Cord-Free Power Supply". IEEE Transactions on Magnetics. vol. 38. No. 5, Sep. 2002, pp. 3329-3331, 3 pages.
Fernandez, et al., "Design Issues of a Core-less Transformer for a Contact-less Application", IEEE, Universidad Politecnica de Madrid, 2002, pp. 339-345, 7 pages.
Office Action in connection with U.S. Appl. No. 113/155,811 dated Mar. 8, 2013, 13 pages.
Liu, et al., "Optimal Design of a Hybrid Winding Structure for Planar Contactless Battery Charging Platform", IEEE, Department of Electronic Engineering, City University of Hong Kong, 2006, pp. 2568-2575, 8 pages.
Topfer, et al., "Multi-Pole Magnetization of NdFeB Sintered Magnets and Thick Films for Magnetic Micro-Actuators", ScienceDirect, Sensor and Actuators, 2004, pp. 257-263, 7 pages.
Topfer, et al., "Multi-Pole Magnetization of NdFeB Magnets for Magnetic Micro-Actuators and Its Characterization with a Magnetic Field Mapping Device", ScienceDirect, Journal of Magnetism and Magnetic Materials, 2004, 124-129, 6 pages.
Sakamoto, et al., "A Novel High Power Converter for Non-Contact Charging with Magnetic Coupling", IEEE Transactions on Magnetics, vol. 30, No. 6, Nov. 1994, pp. 4755-4757, 3 pages.
Hui, et al., "Some Electromagnetic Aspects of Careless PCB Transformers", IEEE Transactions on Power Electronics, vol. 15, No. 4, Jul. 2000, pp. 805-810, 6 pages.
Waffenschmidt, et al., "Limitation of Inductive Power Transfer for Consumer Applications", 13th European Conference on Power Electronics and Applications, Barcelona, 2009. EPE '09. pp. 1-10, 10 pages.
Stokes, "Palm Strikes Back with new OS, Pre Handset at CES, http://arstechnica.com/news.ars/post/20090101-palm-laundhes -new-handset-pre-operating", Jan. 8, 2009, 6 pages.
Sullivan, Visteon to Sell Wireless Gadget Charger, "Wire-Free Technology will Lets Consumers Dump Cords and Chargers", Red Herring, Dec. 29, 2006, 2 pages.
Kim, "Wireless Charger for New Palm Phone", San Francisco Chronicle and SFGate.com, May 11, 2009, 2 pages.
Compeau, Red Zen Marketing, "Could This be the Mojo Behind the Palm Pre's Touchstone Charger?", http://redzenmarketing.posterous.com/could-this-be-the-mojo-behind-the-palm-pres-t, Jun. 5, 2009, 3 pages.
Fulton Innovation LLC, "The Big Story for CES 2007: The Public Debut of eCoupled Intelligent Wireless Power", ecoupled, Dec. 27, 2006, 2 pages.
Miller, "Palm May Make Pre Scarce", The San Jose Mercury News, Apr. 29, 2009, 1 page.
Murakami et al., "Consideration on Cordless Power Station Contactless Power Transmission System", IEEE Transactions on Magnets, vol. 32, No. 5, Sep. 1996, 3 pages.
Epson Air Trans "Wireless Power Transfer", http://www.2k1.co.uk/components/epson_airtrans.asp, Dec. 8, 2008, 2 pages.
Choi, et al., "A New Contactless Battery Charger for Portable Telecommunication/Compuing Electronics", IEEE, School of Electronic and Electrical Engineering, Kyungpook National University, Taegu, Korea, 2001, pp. 58-59 2 pages.
PCT International Preliminary Report on Patentability dated Nov. 10, 2011 in re International Application No. PCT, US2010/032845, 7 pages.
WiPower, Wikipedia, the free encyclopedia, http://en.wikipedia.org/wiki/WiPower, Nov. 18, 2011, 2 pages.
PowerbyProxi, Wireless Power Solutions, http://www.powerbyproxi.com/, Nov. 18, 2011, 2 pages.
Now charge your iPhone 4 and 4S with Powermat!, Wireless charging mats and receivers for your iPhone, iPod, Blackberry . . . http://www.powermat.com/, Nov. 18, 2011, 1 page.
Witricity. Wireless Electricity Delivered Over Distance, http://www.witricity.com, Nov. 18, 2011, 1 page.
ConvenientPower, ConvenientPower HK Limited, http://www.convenientpower.com/1/about.php, Nov. 18, 2011, 1 page.
Nigel Power LLC: Private Company Information—Business Week, http://investing.businessweek.com/research/stocks/private/snapshot.asp? p . . . , Nov. 18, 2011, 2 pages.
Sakamoto, et al., "A Novel Circuit for Non-Contact Charging Through Electro-Magnetic Coupling", 1992, IEEE, pp. 165-17 4.
Abe, et al., "A Non-Contact Charger Using a Resonant Converter with Parallel Capacitor of the Secondary Coil", Apr. 2000, IEEE, Vo.l. 36, No. 2, pp. 444-451.
Sakamoto, et al. "Large Air-Gap Coupler for Inductive Charger", Sep. 1999, IEEE, vol. 35, No. 5, pp. 3526-3528.
Sakamoto, et al. "A Novel Converter for Non-Contact Charging with Electromagnetic Coupling", Nov. 1993, IEEE, vol. 29, No. 6, pp. 3228-3230.
Kim, et al. "Design of a Contaclless Battery Charger for Cellular Phone", Dec. 2001, IEEE, vol. 48, No. 6, pp. 1238-1247.
Hui, et al."Careless Printed-Circuit Board Transformers for Signal and Energy Transfer", Electronics Letters, May 1998, vol. 34, No. 11, pp. 1052-1054.

(56) **References Cited**

OTHER PUBLICATIONS

Hui, et al. "Optimal Operation of Careless PCB Transformer-Isolated Gate Drive Circuits with Wide Switching Frequency Range", May 1999, IEEE Transactions of Power Electronics, vol. 14, No. 3, pp. 506-514.
Tang, et al. "Characterization of Careless Printed Circuit Board (PCB) Transformers", Nov. 2000, IEEE Transactions of Power Electronics, vol. 15, No. 6, pp. 1275-1282.
Tang, et al. "Careless Printed Circuit Board (PCB) Transformers with Multiple Secondary Windings for Complementary Gate Drive Circuits", May 1999, IEEE Transactions of Power Electronics, vol. 14, No. 3, pp. 431-437.
Tang, et al."Careless Printed Circuit Board (PCB) Transformers with High Power Density and High Efficiency", May 2000, Electronics Letters, vol. 36, No. 11, pp. 943-944.
Borenstein, "Man Tries Wirelessly Boosting Batteries", Nov. 2006, USA Today, http://www.usatoday.com/tech/wireless/data/2006-11-16-wireless-recharging_x.htm, 5 pages.
Murph, "WildCharger Charges Your Gadgetry Sans Wires", Dec. 2006, Misc. Gadgets, 2 pages.
Gizmo Watch, "Pitstop: A Table Top Recharging Solution by Belkin", http://www.gizmowatch.com/entry/pitstop-a-table-top-recharging-solution-by-belkin, Dec. 2006, 5 pages.
Unknown Author, "Cutting the Cord", Apr. 2007, The Economist, 1 page.
Bishop, "Microsoft Surface Brings Computing to the Table", May 2007, http://seattlepi.nwsource.com/business/317737 msftdevic30.html, 7 pages.
Wildcharge, "The Wire-Free Power Revolution is Only Days Away, and WildCharge, Inc. Is Leading the Charge", Sep. 2007, 3 pages.
Economist.com Science Technology Quarterly, "Wireless Charging", http://www.economist.com/science/tq/PrinterFriendly.cfm?story_id=13174387, Apr. 15, 2009, 4 pages.
United States Patent and Trademark Office, Office Action for U.S. Appl. No. 13/708,548, dated Nov. 20, 2013, 5 pages.
United States Patent and Trademark Office, Office Action for U.S. Appl. No. 13/115,811, dated Sep. 23, 2013, 17 pages.
United States Patent and Trademark Office. Office Action for U.S. Appl. No. 13/708,584, dated Sep. 13, 2013, 16 pages.
United States Patent and Trademark Office, Office Action for U.S. Appl. No. 13/158,134, dated Jan. 22, 2014, 43 pages.
United States Patent and Trademark Office, Office Action for U.S. Appl. No. 13/708,827, dated Feb. 5, 2014, 28 pages.
United States Patent and Trademark Office, Office Action for U.S. Appl. No. 13/708,520, dated Feb. 5, 2014, 8 pages.
United States Patent and Trademark Office, Office Action for U.S. Appl. No. 13/115,811, dated Mar. 4, 2014, 15 pages.
United States Patent and Trademark Office, Office Action for U.S. Appl. No. 13/709,983, dated Feb. 27, 2014, 10 pages.
United States Patent and Trademark Office, Office Action for U.S. Appl. No. 13/710,062, dated Feb. 27, 2014, 9 pages.
United States Patent and Trademark Office, Office Action for U.S. Appl. No. 13/710,017, dated Feb. 27, 2014, 11 pages.
Office Action in connection with U.S. Appl. No. 13/708,520 dated May 24, 2013, 7 pages.
Office Action in connection with U.S. Appl. No. 13/158,134 dated Jun. 12, 2013, 15 pages.
United States Patent and Trademark Office, Office Action for U.S. Appl. No. 13/708,838, dated Mar. 14, 2014, 30 pages.
Office Action in connection with U.S. Appl. No. 13/709,983 dated Jun. 7, 2013, 7 pages.
International Search Report dated Jun. 14, 2013, International Application No. PCT/US2013/033352 filed Mar. 21, 2013, 3 pages.
International Searching Authority, International Search Report and Written Opinion for PCT/US2012/021729, dated Aug. 31, 2012, 9 pages.
Office Action in connection with U.S. Appl. No. 13/710,017 dated Jun. 11, 2013, 7 pages.
European Search Report and Search Opinion in connection with Europe Application 08747863.2 (European National Stage application of PCT/US2008/063084) dated Apr. 2, 2013, 7 pages.
Office Action in connection with Chinese Application 200880023854.4 (Chinese National Stage application of PCT/US2008/063084) dated Aug. 28, 2012, 18 pages.
Office Action in connection with Japanese Application JP/2010-50766 (Japanese National Stage application of PCT/US2008/063084) dated Dec. 3, 2012, 4 pages.
Office Action in connection with U.S. Appl. No. 13/709,937 dated Sep. 12, 2013, 7 pages.
Office Action in connection with U.S. Appl. No. 12/769,586 dated Dec. 13, 2012, 19 pages.
Office Action in connection with U.S. Appl. No. 13/708,827 dated Jun. 26, 2013, 22 pages.
Office Action in connection with U.S. Appl. No. 13/708,838 dated Jun. 24, 2013, 27 pages.
PCT International Search Report in connection with PCT Application No. PCT/US2011/040062 dated Feb. 17, 2012, 9 pages.
Office Action in connection with U.S. Appl. No. 13/708,548 dated Jun. 7, 2013, 5 pages.
Office Action in connection with U.S. Appl. No. 13/115,811 dated Mar. 28, 2013, 13 pages.

* cited by examiner

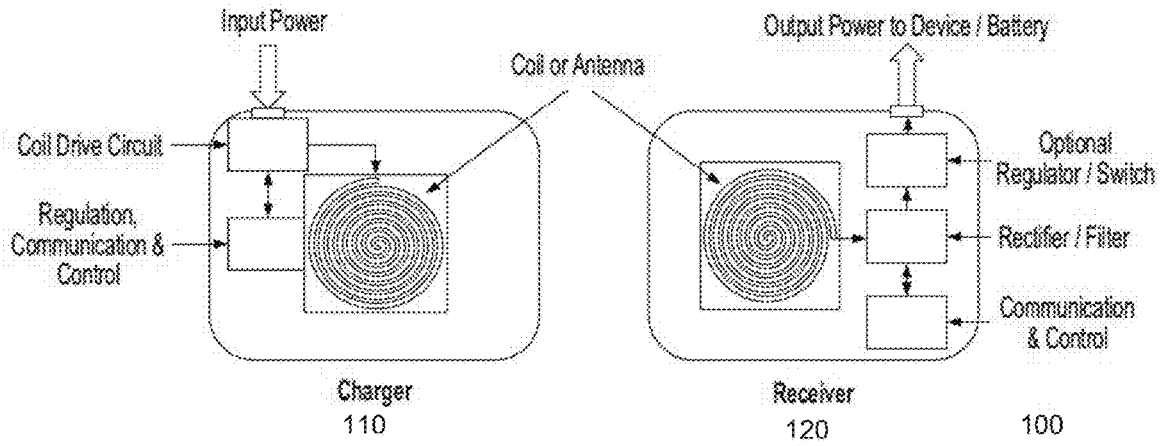

FIGURE 1

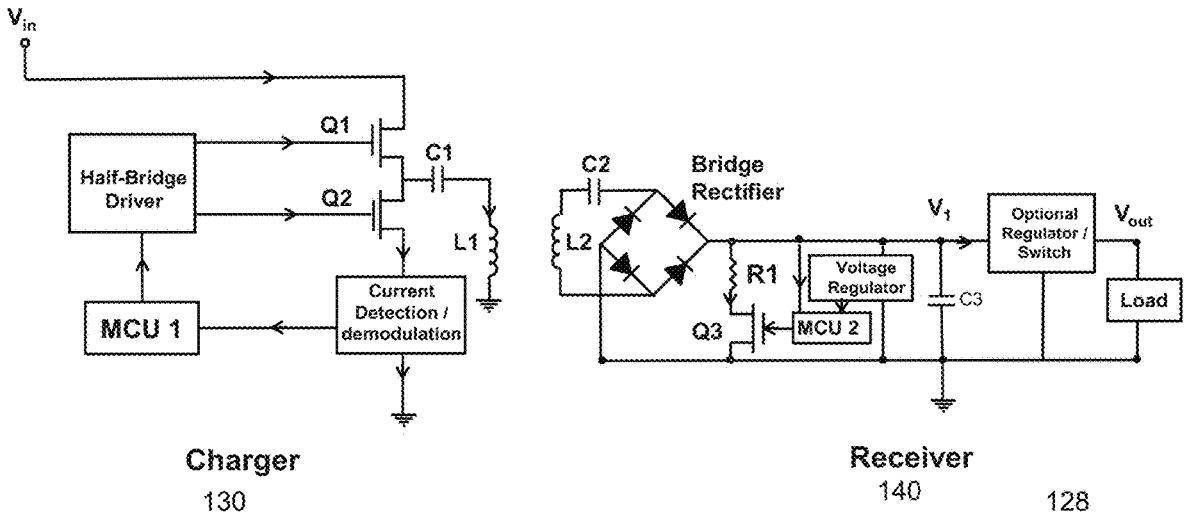

FIGURE 2

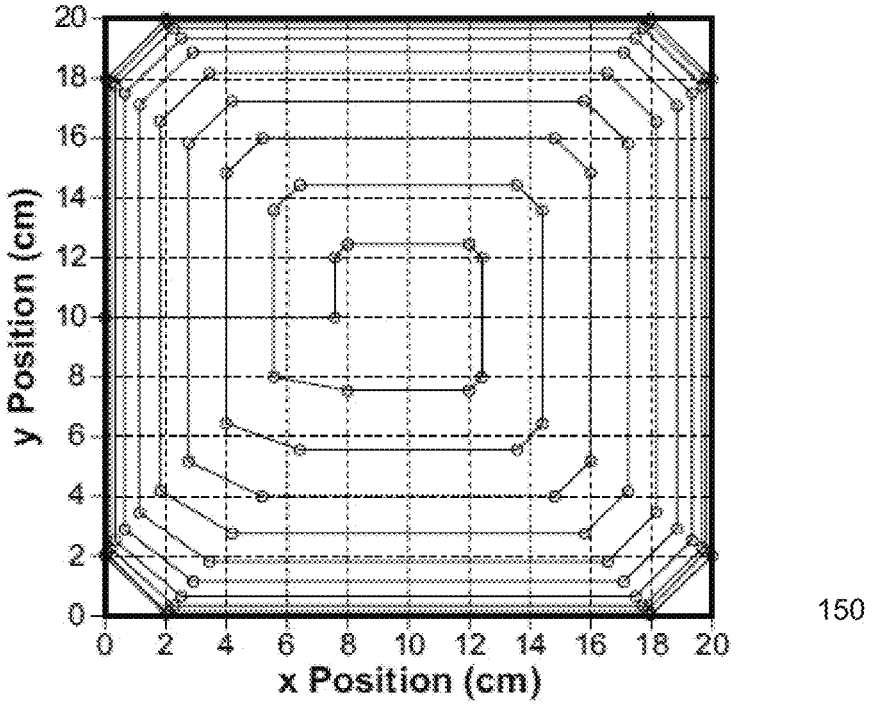

FIGURE 3

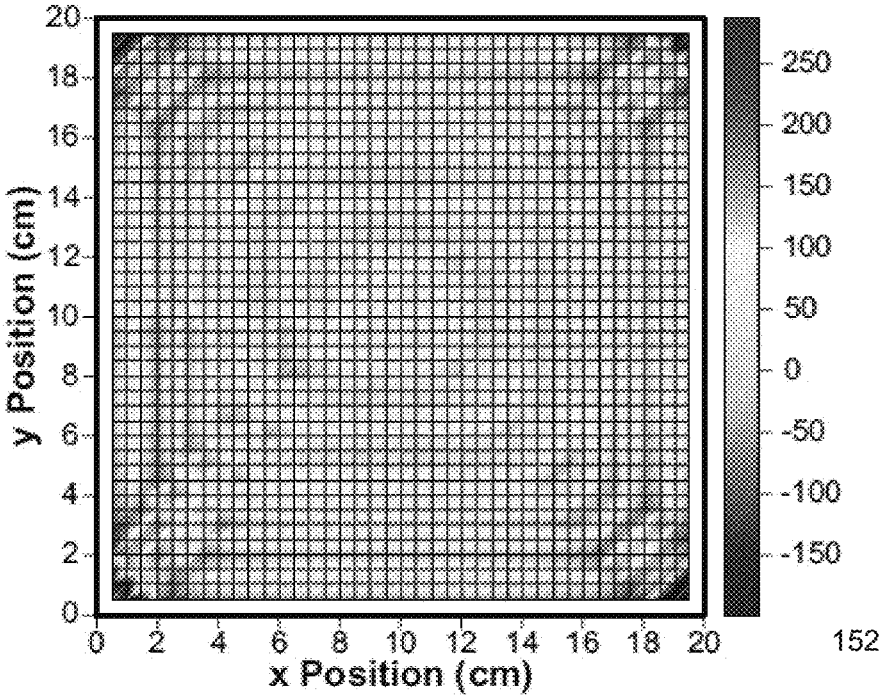

FIGURE 4

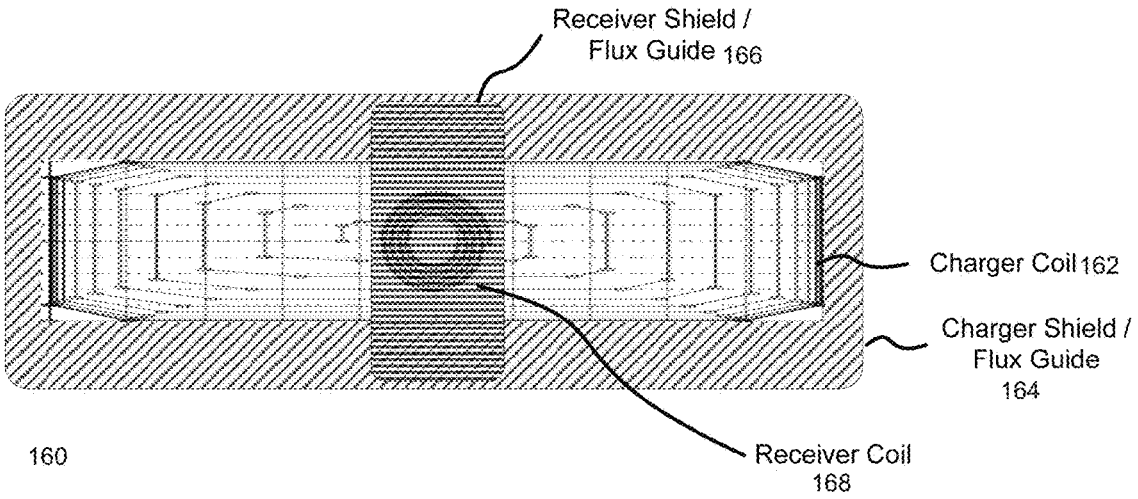

FIGURE 5

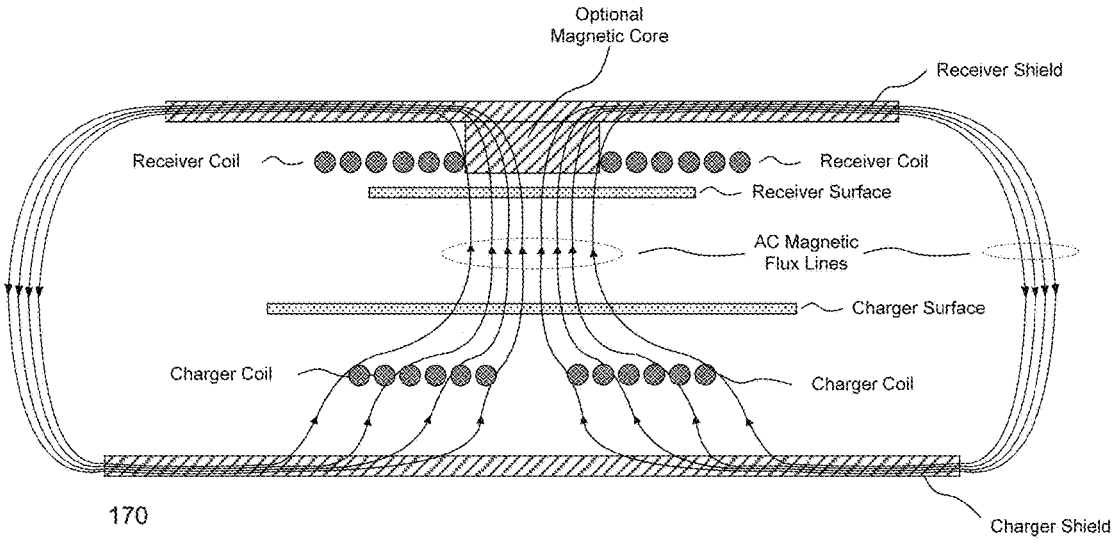

FIGURE 6

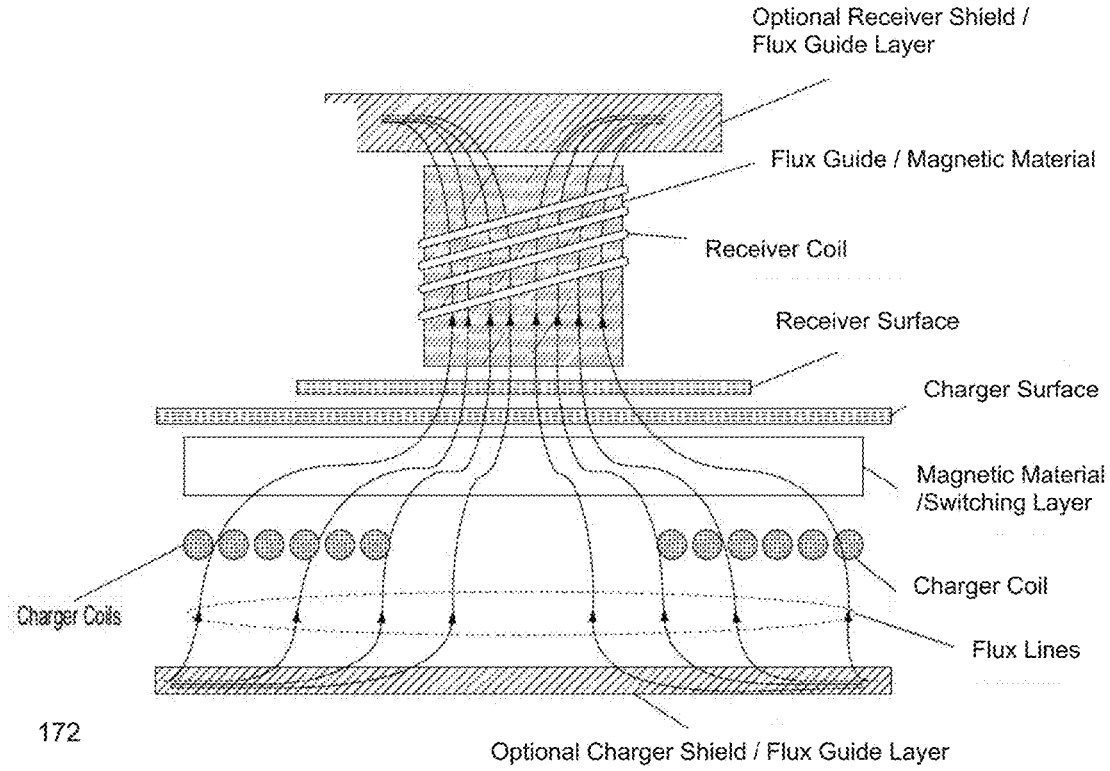

FIGURE 7

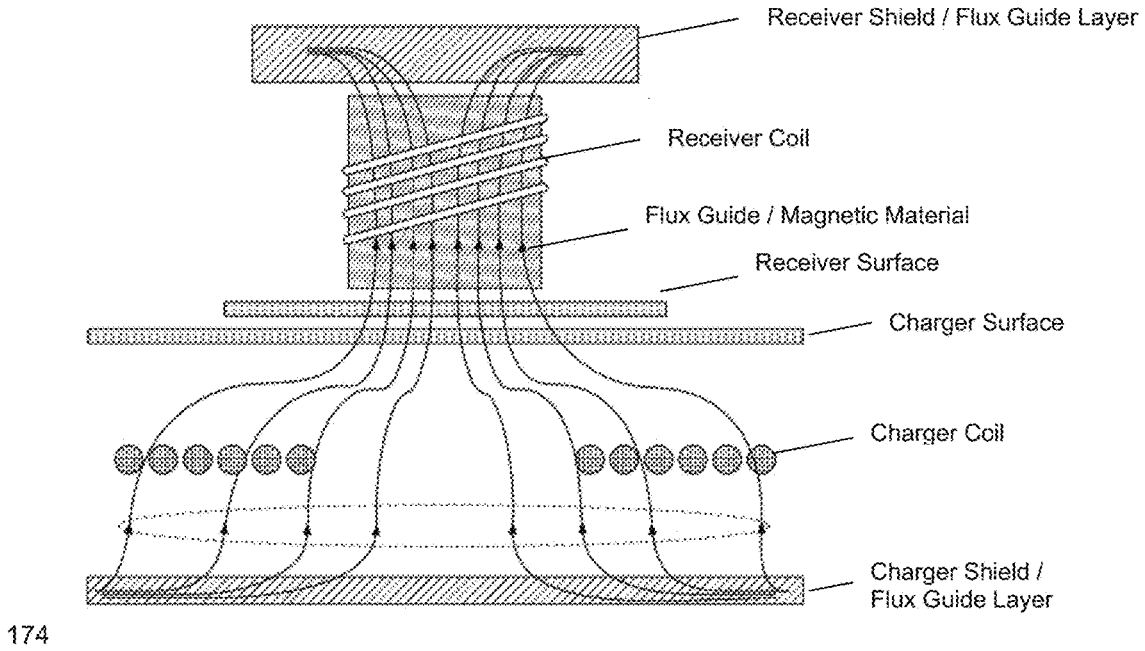

FIGURE 8

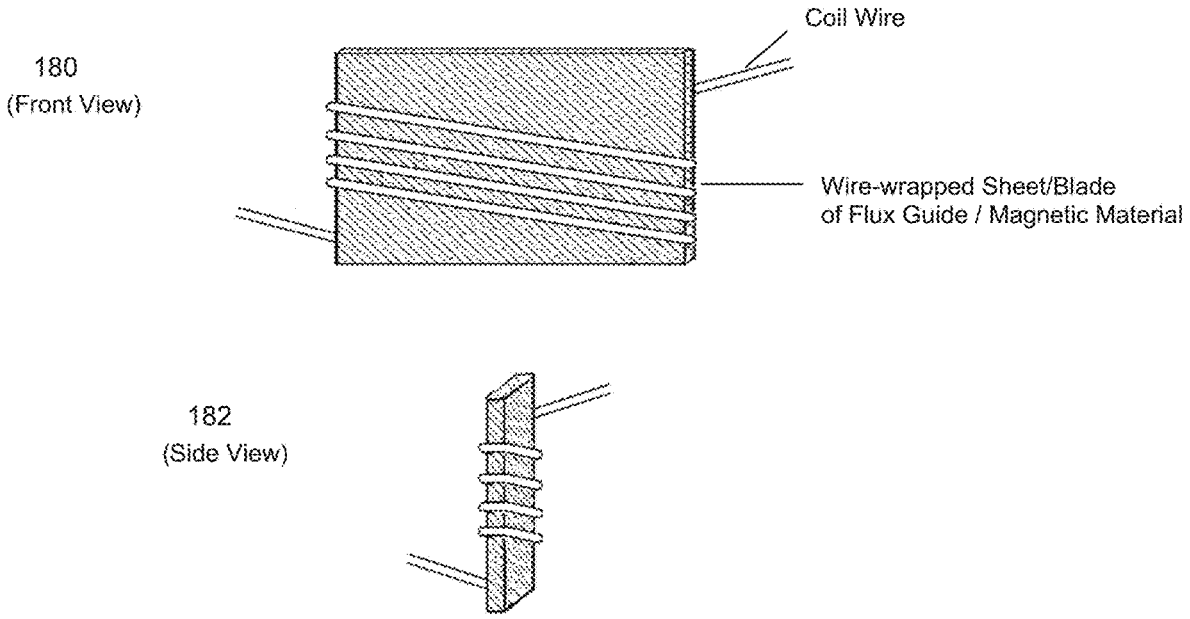

FIGURE 9

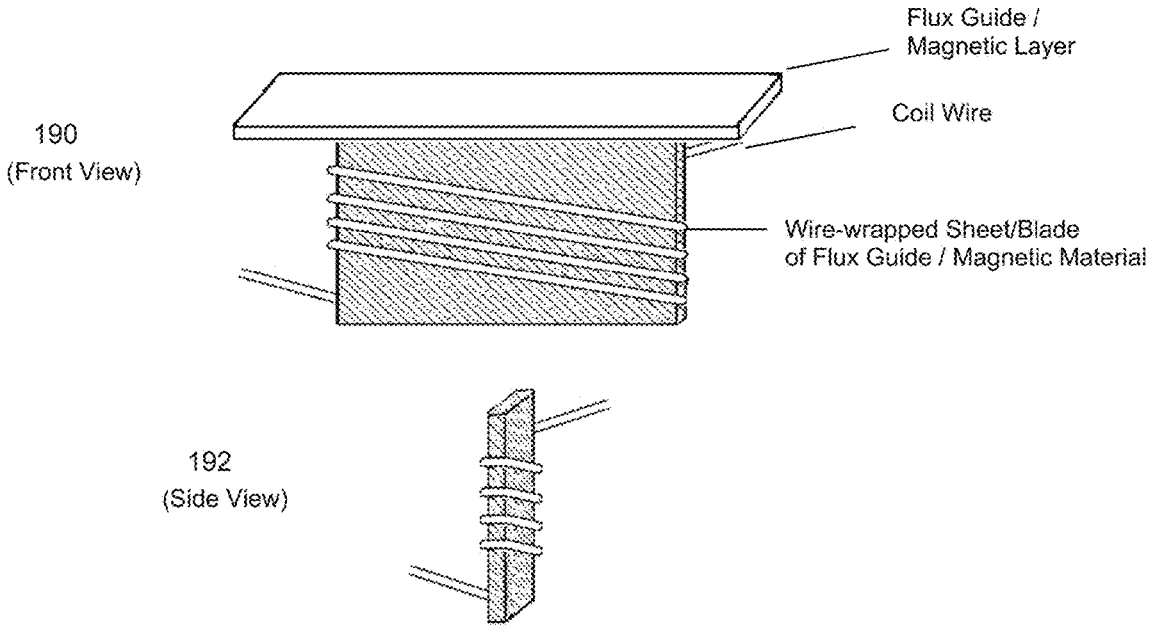

FIGURE 10

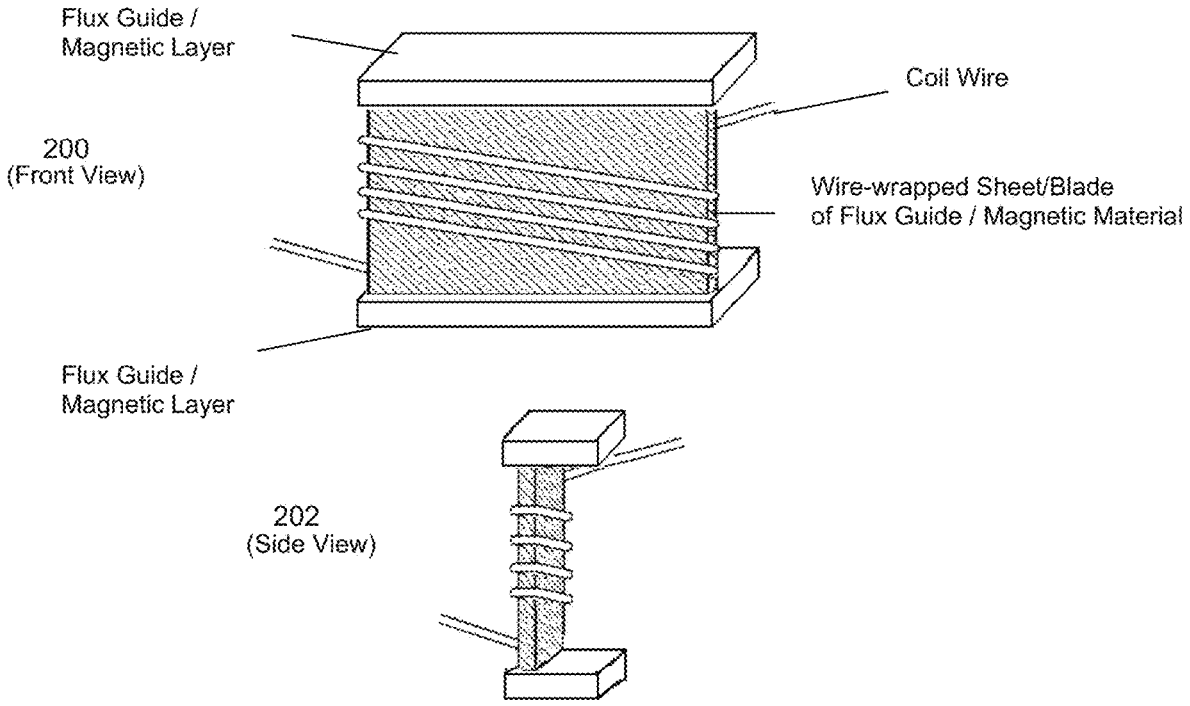
Flux Guide /
Magnetic Layer
Coil Wire
200
(Front View)
Wire-wrapped Sheet/Blade
of Flux Guide / Magnetic Material
Flux Guide /
Magnetic Layer
202
(Side View)

FIGURE 11

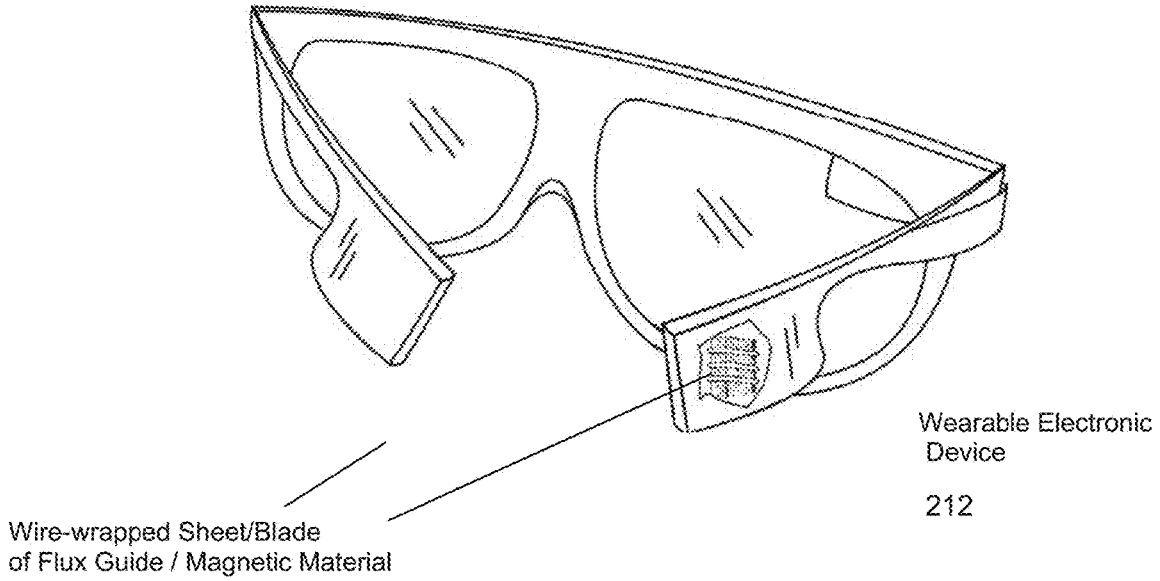

FIGURE 12

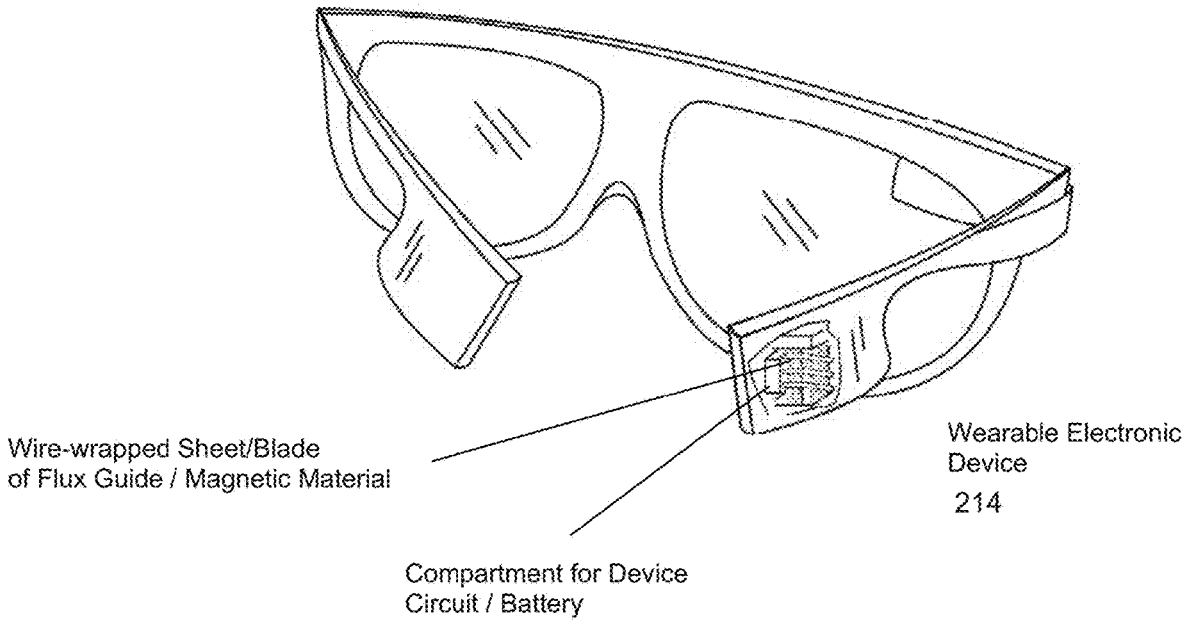

FIGURE 13

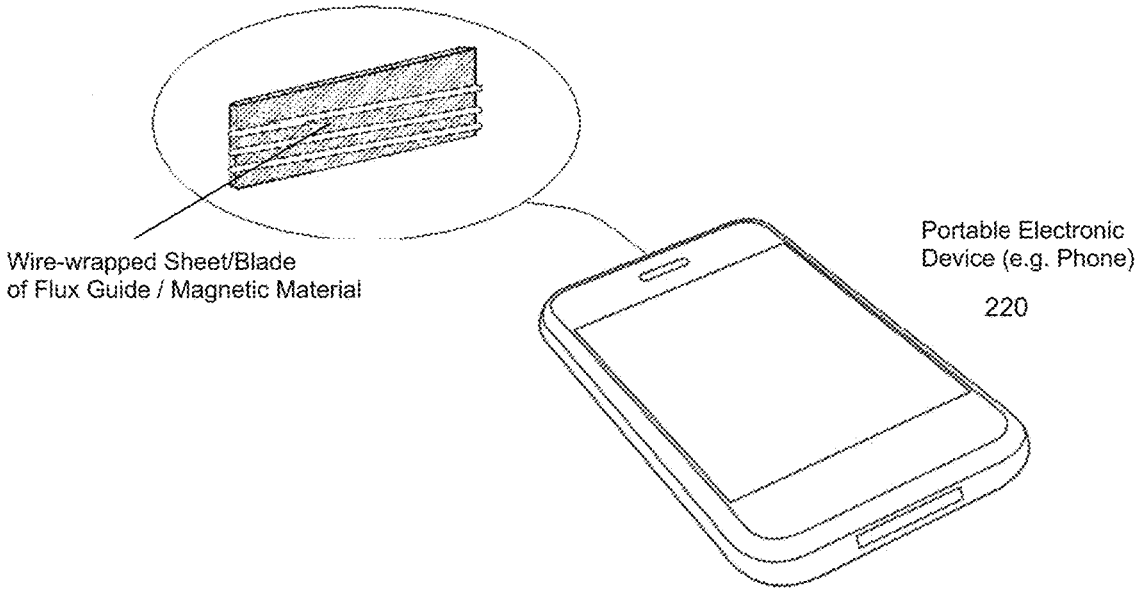

FIGURE 14

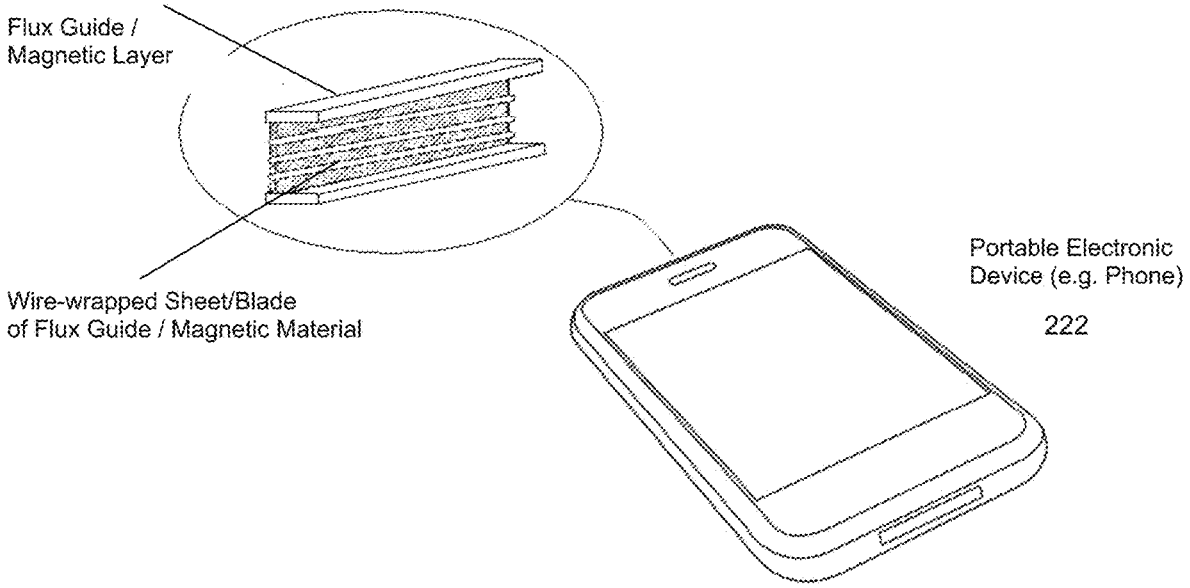

FIGURE 15

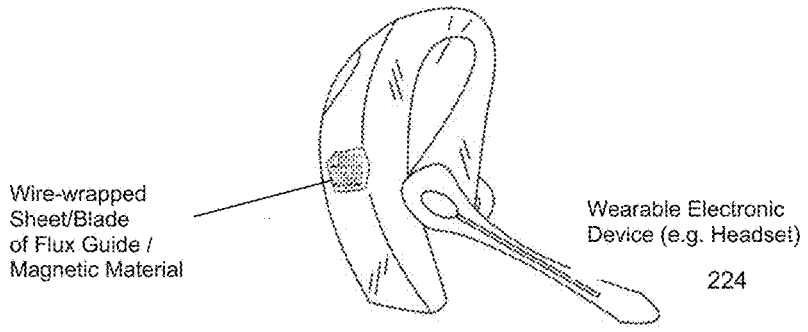

FIGURE 16

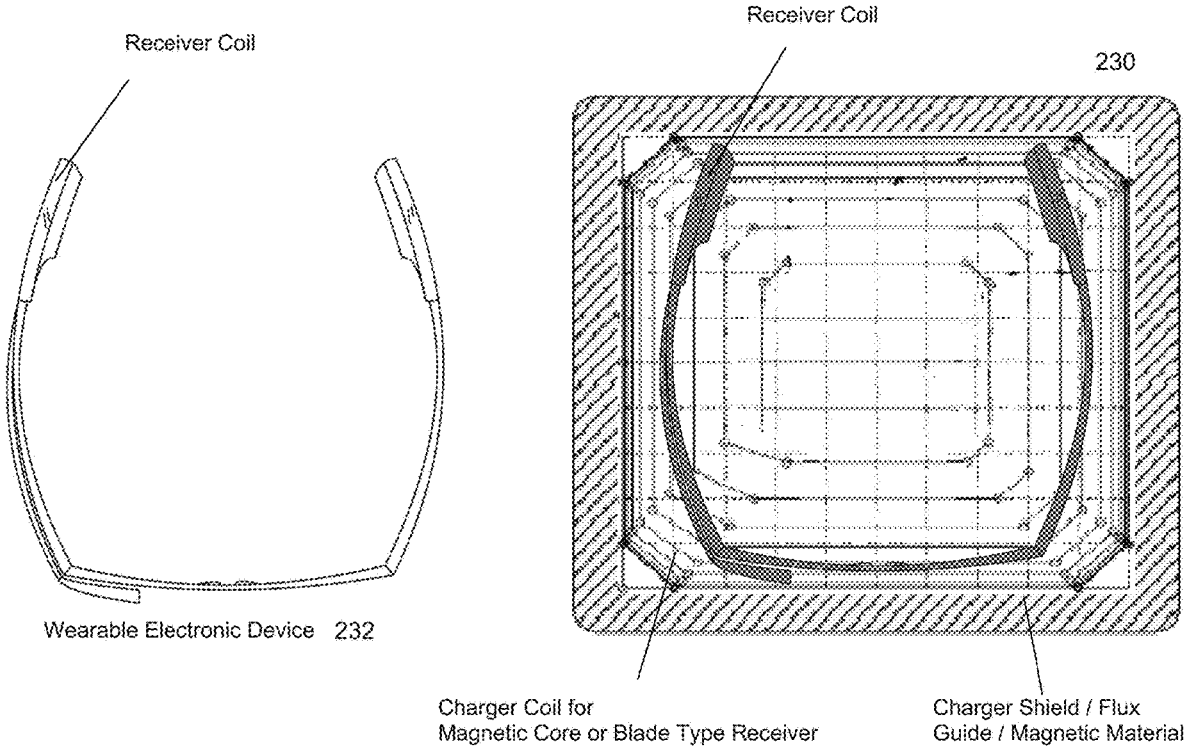

FIGURE 17

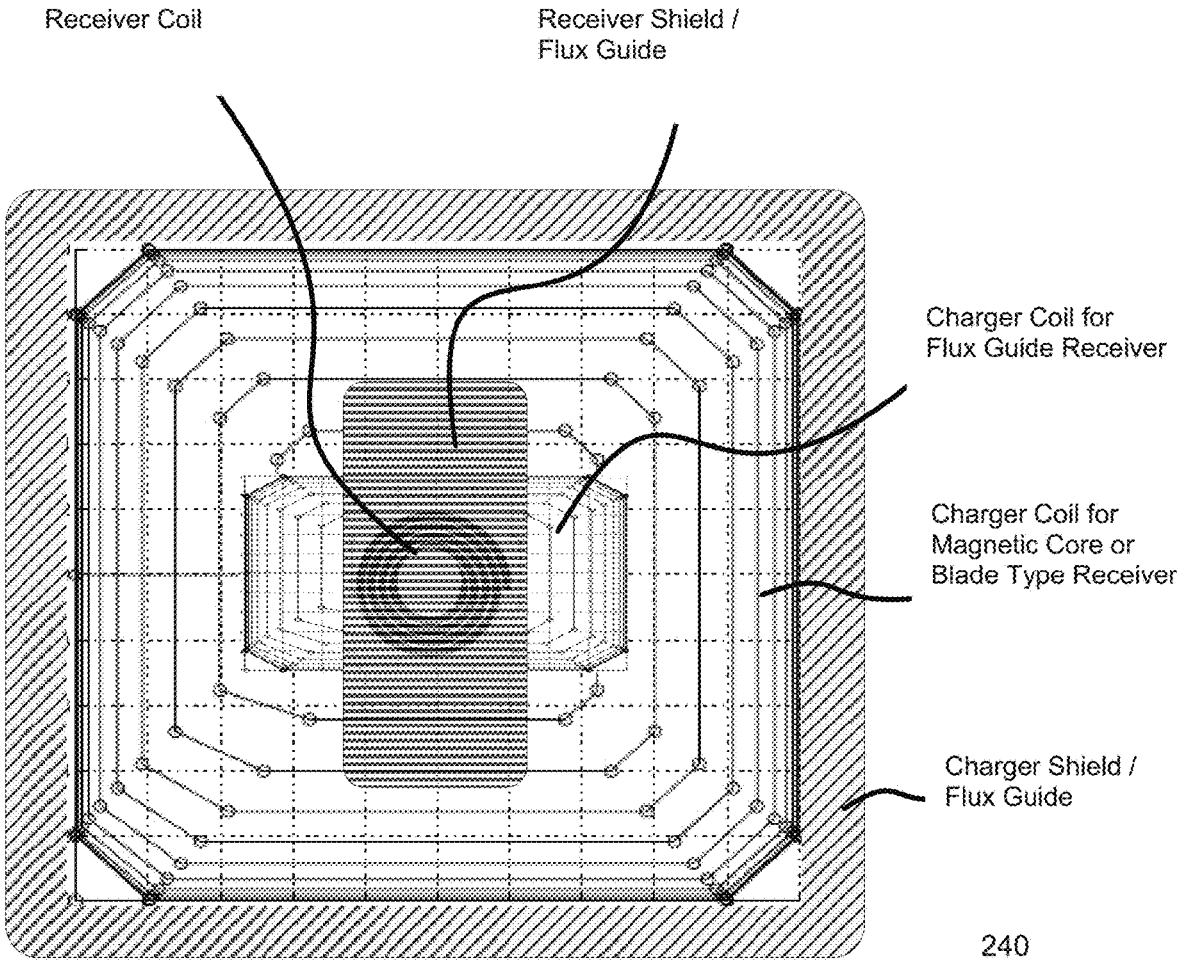
Receiver Coil
Receiver Shield / Flux Guide
Charger Coil for Flux Guide Receiver
Charger Coil for Magnetic Core or Blade Type Receiver
Charger Shield / Flux Guide
240

FIGURE 18

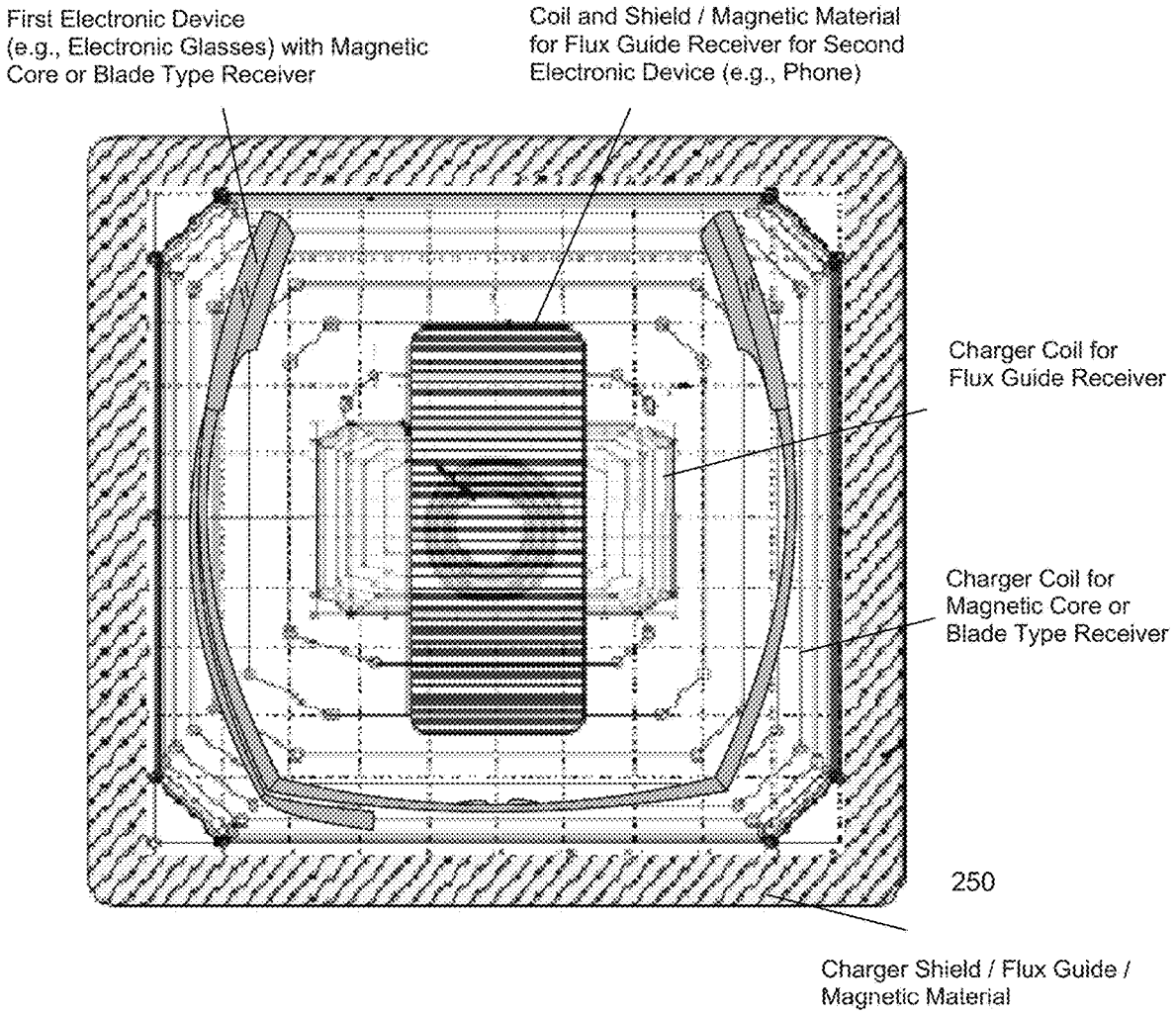
First Electronic Device
(e.g., Electronic Glasses) with Magnetic
Core or Blade Type Receiver
Coil and Shield / Magnetic Material
for Flux Guide Receiver for Second
Electronic Device (e.g., Phone)
Charger Coil for
Flux Guide Receiver
Charger Coil for
Magnetic Core or
Blade Type Receiver
250
Charger Shield / Flux Guide /
Magnetic Material

FIGURE 19

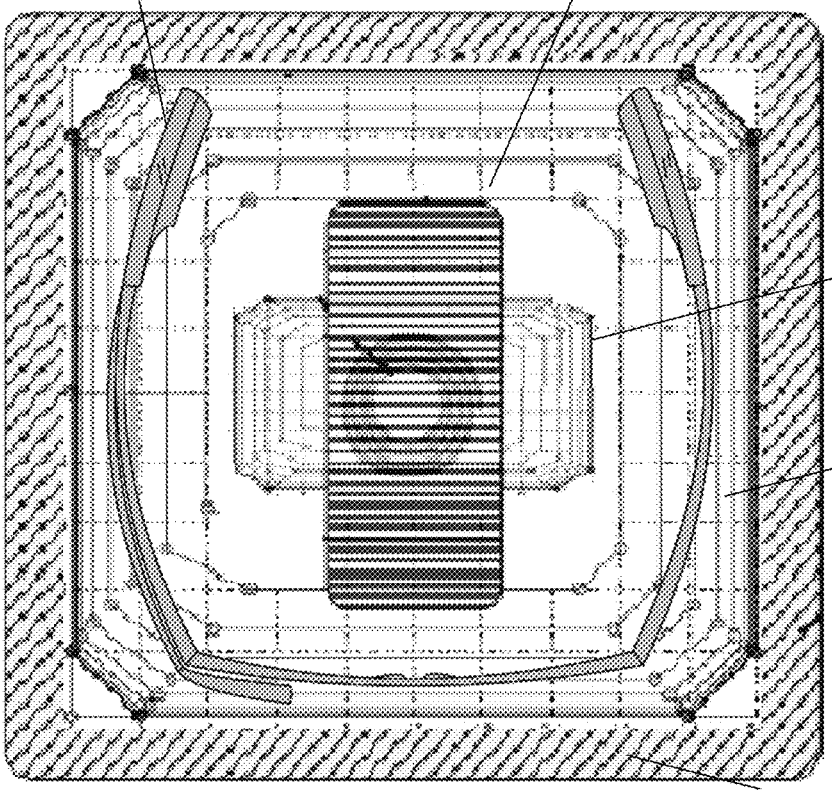
First Electronic Device
(e.g., Electronic Glasses) with Magnetic
Core or Blade Type Receiver
Coil and Shield / Magnetic Material
for Flux Guide Receiver for Second
Electronic Device (e.g., Phone)
Charger Coil for
Flux Guide Receiver
Charger Coil for
Magnetic Core or
Blade Type Receiver
260
Charger Shield / Flux Guide /
Magnetic Material

FIGURE 20

SYSTEM AND METHOD FOR POWERING OR CHARGING RECEIVERS OR DEVICES HAVING SMALL SURFACE AREAS OR VOLUMES

CLAIM OF PRIORITY AND CROSS-REFERENCE TO RELATED APPLICATIONS

This application claims the benefit of priority to U.S. Provisional Patent Application No. 61/811,638, titled "SYSTEM AND METHOD FOR POWERING OR CHARGING ONE OR MULTIPLE RECEIVERS OR DEVICES HAVING SMALL SURFACE AREAS OR VOLUMES" filed Apr. 12, 2013; and is related to U.S. Patent Publication No. 20130285604 (U.S. patent application Ser. No. 13/828,789), titled "SYSTEMS AND METHODS FOR WIRELESS POWER TRANSFER" filed Mar. 14, 2013; and U.S. Patent Publication No. 20120235636 (U.S. patent application Ser. No. 13/352,096), titled "SYSTEMS AND METHODS FOR PROVIDING POSITIONING FREEDOM, AND SUPPORT OF DIFFERENT VOLTAGES, PROTOCOLS, AND POWER LEVELS IN A WIRELESS POWER SYSTEM", filed Jan. 17, 2012, which claims the benefit of priority to U.S. Provisional Patent Application No. 61/433,883, titled "SYSTEM AND METHOD FOR MODULATING THE PHASE AND AMPLITUDE OF AN ELECTROMAGNETIC WAVE IN MULTIPLE DIMENSIONS", filed Jan. 18, 2011; U.S. Provisional Patent Application No. 61/478,020, titled "SYSTEM AND METHOD FOR MODULATING THE PHASE AND AMPLITUDE OF AN ELECTROMAGNETIC WAVE IN MULTIPLE DIMENSIONS", filed Apr. 21, 2011; and U.S. Provisional Patent Application No. 61/546,316, titled "SYSTEMS AND METHODS FOR PROVIDING POSITIONING FREEDOM, AND SUPPORT OF DIFFERENT VOLTAGES, PROTOCOLS, AND POWER LEVELS IN A WIRELESS POWER SYSTEM", filed Oct. 12, 2011; each of which above applications are herein incorporated by reference.

COPYRIGHT NOTICE

A portion of the disclosure of this patent document contains material which is subject to copyright protection. The copyright owner has no objection to the facsimile reproduction by anyone of the patent document or the patent disclosure, as it appears in the Patent and Trademark Office patent file or records, but otherwise reserves all copyright rights whatsoever.

FIELD OF INVENTION

Embodiments of the invention are generally related to systems and methods for enabling transfer of power, from a wireless charger or power supply, to one or more receivers placed on or near the wireless charger or power supply, including powering or charging one or multiple receivers or devices having small surface areas or volumes.

BACKGROUND

Wireless technologies for powering and charging mobile and other electronic or electric devices, batteries and vehicles have been developed. Such systems generally use a wireless power charger or transmitter, in combination with a wireless power receiver, to provide a means for transfer of power. In some systems, the charger and receiver coil parts

of the system are aligned and of comparable size. However, in some applications, it would be preferable to use receiver coils or antennas that have smaller areas or volumes. These are the general areas that embodiments of the invention are intended to address.

SUMMARY

In at least one embodiment, a system for inductive power transfer includes a charger. The charger is an inductive charger. The system also includes a first mobile device that includes a receiver to inductively receive power for the first mobile device. In at least one embodiment, a charger for inductive charging includes a printed circuit board having a charger coil, a substantially planar magnetic layer, a charger drive circuit, and means for positioning a receiver in a power transfer position. In at least one embodiment, a mobile device that receives power inductively includes a receiver to inductively receive power for the mobile device. In at least one embodiment, a method for inductive power transfer to a mobile device, which includes a receiver includes positioning the receiver in a power transfer position to inductively receive power from an inductive charger. The method further includes inductively transferring power from the charger to the receiver of the first mobile device. Described herein are systems and methods for enabling transfer of power, from a wireless charger or power supply, to one or more receivers placed on or near the wireless charger or power supply, including powering or charging one or multiple receivers or devices having small surface areas or volumes. In accordance with an embodiment, a receiver coil can be generally shaped as a blade or thin solenoid, which receives power inductively, which is then used to power or charge one or more electronic devices. Applications include inductive or magnetic charging and power, and particularly usage in mobile, electronic, electric, lighting, or other devices, batteries, power tools, kitchen, industrial, medical or dental, or military applications, vehicles, robots, trains, and other usages.

BRIEF DESCRIPTION OF THE FIGURES

FIG. **1** illustrates a system for wireless powering or charging of devices, in accordance with an embodiment.

FIG. **2** illustrates another view of a wireless charger system, in accordance with an embodiment.

FIG. **3** illustrates an example of a charger coil, in accordance with an embodiment.

FIG. **4** illustrates a resulting magnetic field, in accordance with an embodiment.

FIG. **5** illustrates a charger geometry, in accordance with an embodiment.

FIG. **6** illustrates a return magnetic flux from a charger, in accordance with an embodiment.

FIG. **7** illustrates wire wrapped around a core to create a solenoid type receiver, in accordance with an embodiment.

FIG. **8** illustrates a ferrite lower magnetic shield or flux guide, in accordance with an embodiment.

FIG. **9** illustrates a receiver coil wrapped around a very thin magnetic material, in accordance with an embodiment.

FIG. **10** illustrates the use of additional magnetic or ferrite material or layers added to or otherwise integrated with the top and/or bottom of the receiver coil, in accordance with an embodiment.

FIG. **11** illustrates the use of additional magnetic or ferrite material or layers added to or otherwise integrated with the top and/or bottom of the receiver coil, in accordance with another embodiment.

FIG. **12** illustrates integration of a receiver into a wearable headset or electronic display device or glasses, in accordance with an embodiment.

FIG. **13** illustrates an embodiment that incorporates magnetic or ferrite material sections above and below the main coil section, in accordance with an embodiment.

FIG. **14** illustrates integration of a receiver into a mobile phone, in accordance with an embodiment.

FIG. **15** illustrates that incorporates magnetic or ferrite material sections above and below the main coil section, in accordance with an embodiment.

FIG. **16** illustrates integration of a receiver into a headset device, in accordance with an embodiment.

FIG. **17** illustrates a charger for use in coupling to a blade type receiver in the outer perimeter of the charger surface, in accordance with an embodiment.

FIG. **18** illustrates a charger that provides different sections with different operating principles or protocols and/or driving and/or communication sections, in accordance with an embodiment.

FIG. **19** illustrates a charger that provides different sections, in accordance with another embodiment.

FIG. **20** illustrates a charger that provides different sections, in accordance with another embodiment.

DETAILED DESCRIPTION

With the proliferation of electrical and electronic devices and vehicles (which are considered examples of devices herein), simple and universal methods of providing power and or charging of these devices is becoming increasingly important.

In accordance with various embodiments, the term device, product, or battery is used herein to include any electrical, electronic, mobile, lighting, or other product, batteries, power tools, cleaning, industrial, kitchen, lighting, military, medical, dental or specialized products and vehicles, automobiles, personal mobility (e.g., Segway type) devices, buses, or movable machines such as robots or other mobile machines or other devices whereby the product, part, or component is powered by electricity or an internal or external battery and/or can be powered or charged externally or internally by a generator or solar cell, fuel cell, hand or other mechanical crank or alike.

In accordance with an embodiment, a product or device can also include an attachable or integral skin, case, cover, battery door or attachable or add-on or dongle type of receiver component, to enable the user to power or charge the product, battery, or device.

Induction generally refers to generation of electromotive force (EMF) or voltage across a closed electrical path in response to a changing magnetic flux through any surface bounded by that path. In literature, sometimes magnetic induction is defined as if it is limited to tightly-coupled cases whereby the charger and receiver coils are of similar sizes or the gap between them is small. Magnetic resonance is a term that has been used recently for inductive power transfer where the charger and receiver may be far apart or the transmitter and receiver coils are of different size. The term loosely-coupled wireless charging has also been used for these systems. Since magnetic resonance or loosely-coupled wireless charging is in general a form of induction, as used herein in accordance with various embodiments the term induction is used for any of these systems (including inductive or tightly-coupled wireless power transfer, magnetic resonant or loosely-coupled wireless power transfer and hybrid systems), and induction and magnetic resonance are sometimes used interchangeably to indicate that the method of power transfer can be in either domain or a combination thereof.

In accordance with various embodiments, an inductive power transmitter employs a magnetic induction coil(s) transmitting energy to a receiving coil(s) in or on a device or product, case, battery door, or attachable or add-on component including attachments such as a dongle or a battery inside or outside of device or attached to device through a connector and/or a wire, or stand-alone placed near or on the power transmitter platform. The receiver can be an otherwise incomplete device that receives power wirelessly and is intended for installation or attachment in or on the final product, battery or device to be powered or charged, or the receiver can be a complete device intended for connection to a device, product or battery directly by a wire or wirelessly. As used herein, the term wireless power, charger, transmitter or inductive or magnetic resonance power and charger are used interchangeably.

In accordance with an embodiment, the wireless charger can include a flat or curved surface, or an open or enclosed volume or part that can provide energy wirelessly to a receiver. It can also be constructed of flexible materials and/or coils or even plastic electronics to enable mechanical flexibility and bending or folding to save space or for conformity to non-flat surfaces.

In accordance with an embodiment, the wireless charger can be directly powered by an AC power input, DC power, or other power source such as a car, motorcycle, truck or other vehicle or airplane or boat or ship power outlet, or vehicle, boat, ship or airplane itself, primary (non-rechargeable) or rechargeable battery, solar cell, fuel cell, mechanical (e.g., hand crank, wind, or water source), nuclear source, or other wireless charger or power supply or a combination thereof. In addition, the wireless charger can be powered by a part such as a rechargeable battery which is itself in turn recharged by another source such as an AC or DC power source, vehicle, boat or ship or airplane outlet or vehicle, boat or ship or airplane itself, solar cell, fuel cell, mechanical (e.g., hand crank, wind, or water source) or nuclear source, or a combination thereof.

In accordance with various embodiments, in applications where the wireless charger is powered by a rechargeable source such as a battery, the battery can also be itself in turn inductively charged by another wireless charger. The wireless charger can be a stand-alone part, device, or product, or can be incorporated into another electric or electronics device, table, desk chair, armrest, TV stand or mount or furniture or vehicle or airplane or marine vehicle or boat or objects such as a table, desk, chair, counter-top, shelving or check out or cashier counters, kiosk, car seat, armrest, car console, car door, netting, cup holder, dashboard, glove box, etc., airplane tray, computer, laptop, netbook, tablet, phone, display, TV, magnetic, optical or semiconductor storage or playback device such as hard drive, solid state storage drive, optical players, etc., cable or game console, computer pads, toys, clothing, bags, case or backpack, belt or holster, etc., industrial, medical, dental, military equipment or kitchen counter, area, devices and appliances, phones, cameras, radios, stereo systems, speakers, etc. The wireless charger can also have other functions built in, or be constructed such that it is modular and additional capabilities or functions can be added as needed.

In accordance with various embodiments, some of these capabilities or functions include an ability to provide higher power, charge more devices, exchange the top surface or exterior box or cosmetics, operate by internal power as

described above through use of a battery and/or renewable source such as solar cells, communicate and/or store data from a device, provide communication between the device and other devices or the charger and/or a network, etc. An example is a basic wireless charger that has the ability to be extended to include a rechargeable battery pack to enable operation without external power. Examples of products or devices powered or charged by the induction transmitter and receiver include but are not limited to batteries, cell phones, smart phones, cordless phones, communication devices, heads-up displays, wearable computer with head mounted display, 3-d TV glasses, wearable electronic glasses, wearable computer or communication devices, communication or display watches, pagers, personal data assistants, portable media players, global positioning (GPS) devices, powered headphones or noise cancelling headphones, Bluetooth headsets and other devices, shavers, watches, tooth brushes, calculators, cameras, optical scopes, infrared viewers, computers, laptops, tablets, netbooks, keyboards, computer mice, book readers or email devices, pagers, computer monitors, televisions, music or movie players and recorders, storage devices, radios, clocks, speakers, gaming devices, game controllers, toys, remote controllers, power tools, cash register, delivery or other type of scanners, construction tools, office equipment, robots including vacuum cleaning robots, floor washing robots, pool cleaning robots, gutter cleaning robots or robots used in hospital, clean room, military or industrial environments, industrial tools, mobile vacuum cleaners, medical or dental tools, medical stretcher batteries, military equipment or tools, kitchen appliances, mixers, cookers, can openers, food or beverage heaters or coolers such as electrically powered beverage mugs, massagers, adult toys, lights or light fixtures, signs or displays, or advertising applications, electronic magazines or newspapers or magazines or newspapers containing an electronic and/or display part, printers, fax machines, scanners, electric vehicles, electric golf carts, buses, trains, motorcycles or bicycles, personal mobility (e.g., Segway type) devices, trains or other vehicles or mobile transportation machines, and other battery or electrically powered devices or products or a product that is a combination of the products listed above.

In accordance with an embodiment, the receiver and/or the charger can be incorporated into a bag, carrier, skin, cover, clothing, case, packaging, product packaging or box, crate, box, display case or rack, table, bottle or device etc. to enable some function inside the bag, carrier, skin, clothing, case, packaging, product packaging or box, crate, box, display case or rack, table, bottle (such as, e.g., causing a display case or packaging to display promotional information or instructions, or to illuminate) and/or to use the bag, carrier, skin, clothing, case, packaging, product packaging or box, crate, box, stand or connector, display case or rack, table, bottle, etc., to power or charge another device or component somewhere on or nearby.

In accordance with various embodiments, the product or device does not necessarily have to be portable and/or contain a battery to take advantage of induction or wireless power transfer. For example, a lighting fixture or a computer monitor that is typically powered by an AC outlet or a DC power supply can be placed on a table top and receive power wirelessly. The wireless receiver can be a flat or curved surface or part that can receive energy wirelessly from a charger. The receiver and/or the charger can also be constructed of flexible materials and/or coils or even plastic electronics to enable mechanical flexibility and bending or folding to save space or for conformity to non-flat surfaces.

In accordance with various embodiments, many of these devices contain internal batteries, and the device may or may not be operating during receipt of power. Depending on the degree of charge status of the battery, or its presence and the system design, the applied power may provide power to the device, charge its battery or a combination of the above. The terms charging and/or power are used interchangeably herein to indicate that the received power can be used for either of these cases or a combination thereof. In accordance with various embodiments, unless specifically described, these terms are therefore used interchangeably. Also, unless specifically described herein, in accordance with various embodiments, the terms charger, power supply, and transmitter are used interchangeably.

FIG. **1** illustrates a system for wireless powering or charging of devices in accordance with an embodiment. As shown in FIG. **1**, in accordance with an embodiment, a wireless charger or power system **100** comprises a first charger or transmitter part **110**, and a receiver **120** connected to a mobile or stationary device, vehicle or battery or its charging or power circuit to provide electric power to power or charge the mobile or stationary device, vehicle or its battery.

FIG. **1** shows an example where one charger or power transmitter is charging or powering one receiver. However, in a more general case, the transmitter may comprise one or more transmitters or chargers operating at different power levels and/or using different protocols to power one or more receivers operating at different power levels, voltages and/or protocols.

FIG. **2** illustrates a more detailed view of a wireless charger system **128**, in accordance with an embodiment, with a resonant converter geometry, wherein a pair of transistors **01** and **02** in the charger **130** (such as FETs, MOSFETs, or other types of switch) are driven by a half-bridge driver IC and the voltage is applied to the coil L**1** through one or more capacitors shown as C**1**. In accordance with an embodiment, the receiver **140** includes a coil and an optional capacitor (for added efficiency) shown as C**2** that can be in series or in parallel with the receiver coil L**2**. The charger and/or receiver coils can also include impedance matching circuits and/or appropriate magnetic material layers behind (on the side opposite to the coil surfaces facing each other) them to increase their inductance and/or to shield the magnetic field leakage to surrounding area. The charger and/or receiver can also include impedance matching circuits to optimize or improve power transfer between the charger and receiver.

In several of the embodiments and figures described herein, the resonant capacitor C**2** in the receiver is shown in a series embodiment. This is intended only as a representative illustration, and in accordance with various embodiments this capacitor can be used in series or parallel with the receiver coil. Similarly, the charger is generally shown in accordance with an embodiment where the resonant capacitor is in series with the coil. System implementations with the capacitor C**1** in parallel with the charger coil are also possible.

In accordance with an embodiment, the charger can also include a circuit that measures the current through and/or voltage across the charger coil (for example, in FIG. **2**, a current sensor is shown as an example). Communication between the receiver and the charger can also be provided through the same coils as used for the power transfer, through modulation of a load in the receiver. Various demodulation methods for detection of the communication signal on the charger current or voltage are available. This

demodulation mechanism can be, e.g., an AM or FM receiver (depending on whether amplitude or frequency modulation is employed in the receiver modulator) similar to a radio receiver tuned to the frequency of the communication or a heterodyne detector.

In accordance with an embodiment, the communication and control between the charger and the receiver(s) is conducted over a separate or additional RF or optical or other channels. Optional methods of communication between the charger and receiver can be provided through the same coils as used for transfer of power, through a separate coil, through an RF or optical link, through, e.g., RFID, Bluetooth, WiFi, Wireless USB, NFC, Felica, Zigbee, or Wireless Gigabit (WiGig) or through such protocols as defined by the Wireless Power Consortium (WPC), Alliance for Wireless Power (A4WP) or other protocols or standards, developed for wireless power, or specialized protocols such as Dedicated Short Range Communications (DSRC) for automotive applications, or other communication protocol, or combinations thereof.

In accordance with an embodiment, the microcontroller unit (MCU) in the charger (shown as MCU**1** in FIG. **2**) is responsible for decoding the communication signal from a detection/demodulation circuit and, depending on the algorithm used, making appropriate adjustments to the charger coil drive circuitry to achieve the desired output voltage, current or power from the receiver output.

In accordance with various embodiments, it may be preferable for one or more receivers to receive power when placed at a variety of locations or anywhere on or near a wireless charger area. Such an implementation, in general would benefit from a charger and/or receiver design that allows a uniform power transfer over an area or the entire surface of the charger. To provide more uniform power transfer across a coil, in accordance with an embodiment, methods to provide a more uniform magnetic field across a coil can be used. For example, one method for achieving this uses a hybrid coil comprising a combination of a wire and PCB coils (e.g., X. Liu and S. Y. R. Hui, "Optimal design of a hybrid winding structure for planar contactless battery charging platform," IEEE Transactions on Power Electronics, vol. 23, no. 1, pp. 455-463, 2008). In another method, the transmitter coil can be constructed of Litz wire or patterned printed circuit board (PCB) and has a pattern that is very wide between successive turns at the center and is more tightly wound as one gets closer to the edges (e.g., J. J. Casanova, Z. N. Low, J. Lin, and R. Tseng, "Transmitting coil achieving uniform magnetic field distribution for planar wireless power transfer system," in Proceedings of the IEEE Radio and Wireless Symposium, pp. 530-533, January 2009). FIG. **3** shows an example of a coil **150** in accordance with an embodiment, while FIG. **4** shows a resulting magnetic field **152**.

In a geometry described in U.S. Patent Publication No. 20080067874, a planar spiral inductor coil is demonstrated, wherein the width of the inductor's trace becomes wider as the trace spirals toward the center of the coil to achieve a more uniform magnetic field allowing more positioning flexibility for a receiver across a transmitter surface.

In yet other embodiments (e.g., F. Sato, et al., IEEE Digest of Intermag 1999, PP. GR09, 1999), the coil can be a meandering type of coil, wherein the wire is stretched along X or Y direction and then folds back and makes a back and forth pattern to cover the surface.

In accordance with an embodiment, the charger can operate continuously, and any appropriate receiver coil placed on or near its surface will bring it to resonance and will begin receiving power. The regulation of power to the output can be performed through a regulation stage and/or tuning of the resonant circuit at the receiver. Advantages of such a system include that multiple receivers with different power needs can be simultaneously powered in this way. The receivers can also have different output voltage characteristics.

In accordance with embodiments described in U.S. patent application Ser. No. 13/352,096, published as U.S. Patent Publication No. 20120235636, which application is herein incorporated by reference, two techniques have been described whereby through appropriate design of the system, a position-independent power transfer system with reduced or no undesirable radiation and high efficiency can be achieved. These geometries use a saturable magnetic layer placed above the charger coil area to shield the charger magnetic layer from the surrounding area.

For example, in accordance with an embodiment, a Magnetic Aperture (MA) receiver includes an appropriate magnet in the receiver that can saturate the shield layer nearby the receiver and allow coupling of power only in that area of the charger, resulting in efficient power coupling with minimal residual electromagnetic emission from nearby areas. In accordance with an embodiment, a Magnetic Coupling (MC) system employs a similar geometry but uses the increase in the resonant electromagnetic field between the charger and receiver coils to self-saturate the layer, and does not require a receiver magnet to operate and achieve similar results. These two techniques are further described in the patent applications referenced above.

FIG. **5** shows an additional geometry **160** whereby a charger coil **162** is placed on a magnetic flux guide/shielding layer **164** that extends beyond the edges of the coil. The receiver similarly has a magnetic flux/shielding layer **166** that extends beyond the size of the coil **168**, allowing an overlap area between these flux layers on the top and bottom sides of the receiver. FIG. **6** shows **170** the return magnetic flux from the charger that passes the receiver coil and is guided efficiently to close on itself. Such an efficient flux guide (FG) geometry results in confinement of power transfer to the area of overlap of a receiver and charger coil, and significant increase in power transfer efficiency and reduction of undesirable electromagnetic emission compared to Magnetic Resonance (MR) systems. It is also possible to further decrease any potential emissions from non-covered areas of the charger coil by covering the charger coil with a magnetic shield layer and combining the FG geometry with the earlier described MC or MA modes of operation.

In accordance with the MC geometry, the reluctance of the flux path in the receiver can be lowered by including high permeability material in the core of the receiver ring coil (similar to a solenoid) or a T-shape core or alike. Many geometries are possible, and these geometries are provided merely as examples. Additionally, while in accordance with an embodiment a Litz wire receiver coil can be used, in accordance with other embodiments, PCB coils and/or a combination of Litz wire and PCB coil can be used.

In accordance with an embodiment, to reduce the reluctance of the path, the receiver coil can be created by using a flux guide material (such as ferrite with permeability greater than 1), with an axis perpendicular (or an angle sufficient to catch the substantially perpendicular flux from the charger) to the surface of the charger. As shown **172** in FIG. **7**, Litz wire can be wrapped around the core to create a solenoid type receiver with a relatively small cross section (several mm or smaller by 10 or 20 mm) substantially parallel to the surface of the charger. In one example, the

solenoid height (along the direction of axis of wire wrapped around it, and perpendicular to the surface of the charger) can be varied from 10 to 20 mm, but can be shorter. A typical number of turns on the receiver coil can be 7 to 20 turns. Use of a series or parallel capacitor with such a receiver coil provides a resonant circuit whose output can be rectified and smoothed with a capacitor to provide a DC output. To provide regulated power output, as shown in FIGS. **1** and **2**, a communication or feedback system between charger and receiver and/or an output stage regulator can also be added.

In one example, a charger coil similar to that shown in FIG. **3** and with a thin (0.5 mm thick) ferrite lower magnetic shield/flux guide similar to that shown **174** in FIG. **8** was used. Substantial power transfer (over 20 W) and high efficiencies of up to 55% DC to DC (DC power output of receiver rectifier divided by input to DC charger circuit input power) was received over the entire surface of the charger coil when the charger coil and its associated resonant capacitor were tuned to be resonant at similar frequencies to the receiver coil and its associated capacitor. Power was received with the receiver coil having zero up to several cm of gap from the surface of the charger coil. Such a small solenoid can be provided having very small sizes in one or two dimensions, such that it is shaped as or otherwise resembles a blade, with the contact area being the thin edge of the blade.

In accordance with an embodiment, rotating the angle of the blade solenoid with respect to the perpendicular direction to the surface to the charger can produce large power transfers, confirming that as long as some component of the charger flux is along the axis of the receiver coil, efficient power transfer can be obtained. Both position-free and multiple receiver operation can be provided. As shown in FIG. **7**, optionally, an additional magnetic shield/guide layer on the top of the receiver and/or on the bottom of the charger can also be included. In many applications, it is beneficial to utilize receivers that occupy minimal space and are able to fit inside (or inside an optional part of) a small mobile or fixed position device.

In accordance with an embodiment shown in FIG. **8**, the charger does not utilize a top magnetic layer, and the flux guiding through the magnetic core and/or magnetic layers at the bottom of charger and/or top of receiver is used to provide a low reluctance path for magnetic flux flow and efficient power transfer.

Some examples of the types of devices that can include a small blade type receiver include mobile phones, MP3 players, and wearable computers such as displays, communication and display watches, and electronic glasses. In some applications, the device to be charged has a small surface area that is in contact with the charger surface, for example cylindrical batteries that are placed vertically to be charged, or devices such as wearable electronic glasses or displays whereby the device has a small surface area when placed against a flat or curved charger. In accordance with an embodiment, use of the flux guide and a smaller cross-section parallel to the surface of the charger, as shown in FIG. **7** or **8**, may be useful for these types of applications.

In accordance with an embodiment, a receiver coil or solenoid with a magnetic flux guide can also be constructed to have a somewhat larger area parallel to the surface of the charger, approximating the embodiment illustrated in FIG. **6**, but with a flux guide layer or core in the middle of the coil. In this case, the height of this flux guide or core (along the length perpendicular to the surface of the charger) can be made quite short (e.g., 1-2 mm or less).

In accordance with an embodiment, shown in FIG. **9**, the receiver coil can be wrapped around a very thin magnetic material. By way of example, in accordance with an embodiment **180**, **182** this material can be 1 mm or less in thickness. In one example, coils comprising 0.6 mm thick Litz wire of bundled wire can be wrapped around 0.3 mm thick sheet of 600 permeability ferrite material (20×10×0.3 mm size) and used for such a receiver. Using such a blade type receiver with a coil surface area of 20×0.3 mm on a charger surface of 170 mm×170 mm or larger coil with pattern similar to FIG. **3**, power transfer levels exceeding 20 W, and DC to DC power transfer efficiencies of up to 55%, were observed when the receiver coil was placed at any location and orientation (with the axis of the receiver coil having some component perpendicular to the surface of the charger) on or near the surface of the charger. Additionally, significant power transfer was observed when the receiver coil was moved away from the charger coil in a vertical direction (with coil to coil spacing of 20 mm or larger). Considering that the blade type receiver coil surface occupies an area of 0.02% of the area of the charger coil, achieving such a high level of power transfer and efficiency demonstrates that the flux generated at the surface of the charger coil is efficiently guided and channeled to the location of the receiver coil.

In accordance with an embodiment, such a coil can be made to be symmetrical along its winding axis, and can receive power when the coil is flipped vertically. Such a feature may provide additional flexibility and usage in some applications.

In accordance with another embodiment shown **190**, **192** in FIG. **10**, and **202**, **202** in FIG. **11**, additional magnetic or ferrite material or layers can be added to or otherwise integrated with the top and/or bottom of the receiver coil and its associated magnetic section. Such layers aid in the guidance of the flux generated in the receiver coil and can provide higher efficiency and/or power.

In accordance with an embodiment, the receiver can be used to charge or power wearable mobile communication and display devices, such as wearable electronic glasses, watches, headsets, or other devices. An example of an embodiment for integration into wearable headsets or electronic display devices or glasses is shown **212** in FIG. **12**. In accordance with an embodiment, a device such as an electronic glasses can be oriented on a surface as shown, to receive charging. Alternately, the electronic glasses can be flipped vertically so the top flat side is in contact with a charging surface. In either orientation, the surface area of the device in or near contact with the charger surface can be quite small.

FIG. **12** shows an embodiment that incorporates the receiver coil and/or its associated electronics in a section with a small horizontal (in the plane of the charger coil if the device is laid down on a charger surface) surface area. The embodiments of the receiver coil described above are useful for this implementation, and can also be incorporated in another embodiment **214** shown in FIG. **13** that incorporates magnetic or ferrite material sections above and below the main coil section to further guide the magnetic flux. These layers can also be used to guide or route the charger magnetic flux around the inside cavity and shield any PCB, circuit, battery, or metallic part that may be included in this space from the magnetic field of the charger.

Since, in accordance with an embodiment, such a receiver can be symmetrical in the Z axis (perpendicular to surface of charger or along the axis of the receiver coil winding), the electronic glasses can be laid down in any of the several orientations flatly on the surface and power will be received

by the receiver. In addition, the X and Y position freedom created by the charger coil allows the user to place the electronic glasses at any location on the charger, and even at a Z distance, to receive power.

In accordance with an exemplary embodiment, when a receiver with integrated horizontal flux guide sections, such as the embodiment shown in FIG. **11**, was placed near the outer areas of a 170 mm×170 mm charger coil such as that shown in FIG. **8**, with a charger under a layer of ferrite material flux guide, it was observed that the receiver can receive power even when its coil axis is parallel to the charger surface. This is due to the large parallel (to the surface) component of the charger magnetic flux in these outer areas. The smaller horizontal sections in the receiver coil (shown as the end flux guides in FIG. **11**) also aid in guiding the flux into and out of the receiver coil, and enable operation of the receiver in any orientation. This behavior enables a receiver such as that shown in FIG. **11** to be generally rotatable at any angle along an axis perpendicular to the plane of the orientation shown in lower part of FIG. **11**, when placed on a charger, and still receive power. This behavior can be useful for those applications where orientation independence is required.

In accordance with another embodiment, the receiver can be integrated into devices such as mobile phones, MP3 players, tablets, watches, batteries, headsets, or other devices where limited space is available. FIG. **14** shows an embodiment **220** for integration into a mobile phone at an edge of the phone, or somewhere within the body of the phone. Such a phone with the receiver integrated can be charged when placed at any location on a charger surface. In accordance with another embodiment **222**, horizontal magnetic or ferrite layers on top and bottom can be used, as shown in FIG. **15**.

As described above, in accordance with an embodiment, the receiver coil can be made to be symmetrical along its winding axis, which enables, in either of the embodiments, the phone or other electronic device to be charged with either its back side or its front facing the charger surface. In accordance with an embodiment, the charger and/or the receiver can also be configured to detect the orientation or front-back placement of the device during charging and perform additional functionalities. For example, a phone can be configured so that when the phone is placed face-down on the charger, it can be charged but will enter a "Do Not Disturb" mode so that any incoming calls, messages, texts, emails, etc., will not provide audio, visual or other indications; but, when placed on the charger in its other orientation (display face-up), incoming information can be relayed to the user visually, by audio or even displayed or transmitted to another device (such as transmission to another display when used in cars).

The above illustration is an example of a contextually-aware operation; in accordance with various embodiments, such activities of tying wireless charging to, e.g., launching or performance of other activities or commands can be considered examples of contextually aware charging, additional examples of which are described in U.S. Patent Publication No. 20110050164, which examples can be combined or used with various embodiments of the charger and receiver technologies described herein.

FIG. **16** shows another embodiment **224** for integration of a sheet or blade type receiver coil within an electronic device, in this illustration a headset device, e.g., at the edge or back of the headset, or another suitable location within the body of the headset.

Charger and Receiver Interaction

In accordance with an embodiment, the receiver can be provided as an integral part of a device or battery as described above, or can be provided as an otherwise incomplete device that receives power wirelessly and is intended for installation or attachment in or on the final product, battery or device to be powered or charged, or the receiver can be a complete device intended for connection to a device, product or battery directly by a wire or wirelessly. Examples include replaceable covers, skins, cases, doors, jackets, surfaces, etc for devices or batteries that would incorporate the receiver or part of the receiver and the received power would be directed to the device through connectors in or on the device or battery or the normal wired connector (or power jack) of the device or battery. The receiver can also be a part or device similar to a dongle or insert etc., that can receive power on or near the vicinity of a charger and direct the power to a device or battery to be charged or powered through a wire and/or appropriate connector. Such a receiver can also have a form factor that would allow it to be attached in an inconspicuous manner to the device, such as a part that is attached to the outer surface at the bottom, front, side, or back side of a laptop, netbook, tablet, phone, game player, camera, headset or other electronic device, and routes the received power to the input power connector, battery connector or jack of the device.

In accordance with an embodiment, the connector of such a receiver can be configured such that it has a pass-through or a separate connector integrated into it, so that a wire cable for providing wired charging or power or communication can be connected to the connector without removal of the connector, thus allowing the receiver and its connector to be permanently or semi-permanently be attached to the device throughout its operation and use.

In a more integrated approach, the coil, shield and/or the receiver circuit can be integrated into the construction of the electric or electronic device, and be an integral part of the operation of the device which is powered or charged primarily or as an option (in addition to wired charging) through the wireless power received from the receiver. Many other variations of the receiver implementation are possible, and these examples are not meant to be exhaustive.

In accordance with an embodiment, the receiver can also be provided as a whole or as a part of the electronics, coil, shield, or other part of the system required for receiving power wirelessly. The electronics can comprise discrete components or microcontrollers that when used together provide the wireless receiver functionality, or comprise an Application Specific Integrated Circuit (ASIC) chip or chipset or MCM that is specifically configured to function as the whole or a substantial part of the electronics for wireless receiver system.

In accordance with an embodiment, a system with largely mis-matched (i.e. dissimilar in size or shape) charger and receiver coils can potentially have several advantages. For example, power can be transferred to the receiver coils placed anywhere on the transmitter coil. Several receivers can be placed and powered on one transmitter allowing for simpler and lower cost of transmitter. The system with higher resonance Q can be configured so the gap between the transmitter and receiver coil can be larger than a tightly-coupled system leading to design of systems with more design freedom. In practice, power transfer in distances of several cm or even higher have been demonstrated. Power can be transferred to multiple receivers simultaneously. In addition, the receivers can potentially be of differing power rating or be in different stages of charging or require different power levels and/or voltages.

In accordance with an embodiment, in order to achieve the above characteristics and to achieve high power transfer efficiency, the lower k value is compensated by using a higher Q through design of lower resistance coils, etc. The power transfer characteristics of these systems may differ from tightly-coupled systems and other power drive geometries such as use of resonant converters. Class E amplifiers or Zero Voltage Switching (ZVS) or Zero Current Switching (ZCS) or other power transfer systems may potentially operate more efficiently in these situations. In addition, impedance matching circuits at the charger transmitter and/or receiver may be required to enable these systems to provide power over a range of load values and output current conditions. General operation of the systems can, however be quite similar to the tightly-coupled systems and one or more capacitors in series or parallel with the transmitter and/or receiver coils is used to create a tuned circuit that may have a resonance for power transfer. Operating near this resonance point, efficient power transfer across from the transmitter to the receiver coil can be achieved. Depending on the size difference between the coils and operating points, efficiencies of over 50% up to near 80% have been reported in such loosely-coupled systems.

To provide communication and control between the charger and receiver or receivers, in accordance with an embodiment, a hardware Physical Communication and Control Layer (PCCL) and a software or firmware Command and Control Layer (CCL) can be implemented. Optional methods of communication between the charger and receiver(s) can be provided through the same coils as used for transfer of power, through a separate coil, through an RF or optical link, through RFID, Bluetooth, Wi-Fi, Wireless USB, NFC, Felica, Zigbee, Wireless Gigabit (WiGig), 3G, 4G, etc. or through such protocols as defined by the Wireless Power Consortium (WPC), Alliance for Wireless Power (A4WP), or Power Matters Alliance (PMA), or other protocols such as Dedicated Short Range Communication (DSRC) used for automotive applications or other standards, developed for wireless power, or other communication protocol, or combination thereof.

In simpler architectures, there may be minimal or no communication between the charger and receiver. For example, a charger can be configured to be in a standby power transmitting state, and any receiver in close proximity to it can receive power from the charger. The voltage, power, or current requirements of the device or battery connected to the receiver circuit can be unregulated, or regulated or controlled completely at the receiver or by the device attached to it. In this instance, no regulation or feedback or communication between the charger and receiver may be necessary. In a variation of this, the charger can be configured to be in a state where a receiver in close proximity would bring it into a state of power transmission. Examples of this would be a resonant system where inductive and/or capacitive components are used, so that when a receiver of appropriate design is in proximity to a charger, power is transmitted from the charger to a receiver; but without the presence of a receiver, minimal or no power is transmitted from the charger.

In accordance with an embodiment, in those examples in which communication is provided through the power transfer coils, one method for communication from receiver or receivers to the charger is to modulate a load or impedance in the receiver to affect the voltage and/or current in the receiver coils and therefore create a modulation in the charger coil voltage or current parameters that can be detected through monitoring of its voltage or current. Other methods can include frequency modulation, by combining the received frequency with a local oscillator signal or inductive, capacitive, or resistive modulation of the output of the receiver coil. In addition to communication from receivers to a charger transmitter, it is also possible to modulate the charger voltage at a pre-determined frequency and communication protocol and detect at each receiver to provide communication from the charger to the receivers. Such bi-directional communication may be advantageous in cases where the charger is used to power multiple receivers as will be explained later.

In accordance with an embodiment, the communicated information from a receiver to the charger transmitter can be the output voltage, current, power, device or battery status, validation ID for receiver, end of charge or various charge status information, receiver battery, device, or coil temperature, and/or user data such as music, email, voice, photos or video, or other form of digital or analog data used in a device. It can also be patterns or signals or changes in the circuit conditions that are transmitted or occur to simply notify the presence of the receiver nearby.

In accordance with an embodiment, the data communicated can be any one or more of the information detailed herein, or the difference between these values and the desired value, or simple commands to increase or decrease power, or simply one or more signals that would confirm presence of a receiver or a combination of the above. The receiver and/or charger and/or their coils can also include elements such as thermistors, magnetic shields or magnetic cores, magnetic sensors, and input voltage filters, etc., for safety and/or emission compliance reasons. The receiver can also be combined with other communication or storage functions, such as NFC, Wi-Fi, Bluetooth, etc. In addition, the charger and or receiver can include means to provide more precise alignment between the charger and receiver coils or antennas. These can include visual, physical, or magnetic means to assist the user in alignment of parts. To implement more positioning freedom of the receiver on the charger, the size of the coils can also be mismatched. For example, the charger can comprise a larger coil size, and the receiver a smaller one, or vice versa, so that the coils do not have to be precisely aligned for power transfer.

In accordance with an embodiment, to minimize stand-by power use, the charger can periodically be turned on to be driven with a periodic pattern (a ping process) and if a receiver in proximity begins to draw power from it, the charger can detect power being drawn from it and stay in a transmitting state. If no power is drawn during the ping process, the charger can be turned off or placed in a stand-by or hibernation mode to conserve power, and turned on and off again periodically to continue seeking a receiver.

In accordance with an embodiment, the charger also includes a circuit that measures the current through and/or voltage across the charger coil (for example, a current sensor is shown in FIG. **2** by way of example). As described earlier, various demodulation methods for detection of the communication signal on the charger current or voltage can be used.

While a system for communication between the charger and receiver through the power transfer coils or antennas is described above, in accordance with an embodiment the communication can also be implemented through separate coil or coils, a radio frequency link (AM, FM or other communication method), an optical communication system, or a combination of the above. The communication in any of these methods can also be bi-directional rather than unidirectional as described above.

In accordance with another embodiment, a dedicated RF channel for uni-directional or bi-directional communication between the charger and receiver can be implemented for validation and/or regulation purposes. This system can be similar to the system shown in FIG. **2**, except rather than load modulation being the method of communication, the microcontroller (MCU) in the receiver transmits the required information over an RF communication path. A similar system with LED or laser transceivers or detectors and light sources can be implemented. Advantages of such a system include that the power received is not modulated and therefore not wasted during communication and/or that no noise due to the modulation is added to the system.

In accordance with an embodiment, the microcontroller unit (MCU) in the charger (MCU**1**) is responsible for recognizing and understanding the communication signal from the detection/demodulation circuit and, depending on the algorithm used, making appropriate adjustments to the charger coil drive circuitry to achieve the desired output voltage, current or power from the receiver output. In addition, MCU**1** is responsible for processes such as periodic start of the charger to seek a receiver at the start of charge, keeping the charger on when a receiver is found and accepted as a valid receiver, continuing to apply power and making appropriate adjustments, and/or monitoring temperature or other environmental factors, providing audio or visual indications to the user on the status of charging or power process, etc., or terminating charging or application of power due to end of charge, or customer preference, or over temperature, over current, over voltage, or some other fault condition or to launch or start another program or process.

In accordance with an embodiment, once the charger MCU**1** has received a signal and decoded it, it can take action to provide more or less power to the charger coil. This can be accomplished through known methods of adjusting the frequency, duty cycle or input voltage to the charger coil or a combination of these approaches. Depending on the system and the circuit used, the MCU**1** can directly adjust the bridge driver, or an additional circuit such as a frequency oscillator can be used to drive the bridge driver or the FETs. A typical circuit for the receiver, in accordance with a load modulation communication system embodiment, is shown in FIG. **2**.

In accordance with an embodiment, the receiver circuit can include an optional capacitor C**2** in parallel or series with the receiver coil to produce a tuned receiver circuit. This circuit is known to increase the efficiency of a wireless power system. The rectified and smoothed (through rectifiers and capacitors) output of the receiver coil and optional capacitor is either directly or through a switch or regulator applied to the output. A microcontroller MCU**2** is used to measure various values such as voltage V**1**, current, temperature, state of charge, battery full status, end of charge, etc. and to report back to the charger to provide a closed loop system with the charger as described above. In the circuit shown in FIG. **2**, the receiver MCU**2** communicates back to the charger by modulating the receiver load by rapidly closing and opening a switch in series with a modulation load or impedance at a pre-determined speed and coding pattern. This rapid load modulation technique at a frequency distinct from the power transfer frequency can be easily detected by the charger. A capacitor and/or inductor can also be used as the modulation load.

In accordance with other embodiments, other methods of communication through varying the reactive component of the impedance can also be used. The modulation scheme shown in FIG. **2** is shown only as a representative method and is not meant to be exhaustive. As an example, the modulation can be achieved capacitively, by replacing the resistor with a capacitor. In this instance, the modulation by the switch in the receiver provides an advantage that by choosing the modulation frequency appropriately, it is possible to achieve modulation and signal communication with the charger coil and circuitry, with minimal power loss (compared to the resistive load modulation).

The receiver in FIG. **2** also shows an optional DC regulator that is used to provide constant stable voltage to the receiver MCU**2**. This voltage supply may be necessary to avoid drop out of the receiver MCU**2** during startup conditions where the power is varying largely or during changes in output current, and also to enable the MCU**2** to have a stable voltage reference source so it can measure the V**1** voltage accurately. Alternatively, a switch to connect or disconnect the load can be used or combined with the regulator. To avoid voltage overshoots during placement of a receiver on a charger or rapid changes in load condition, a voltage limiter circuit or elements like Transit Voltage Suppressor (TVS), Zener diodes or regulators or other voltage limiters can also be included in the receiver.

In the above description, a uni-directional communication (from the receiver to the charger) is described. However, this communication can also be bi-directional, and data can be transferred from the charger to the receiver through modulation of the voltage or current in the charger coil and read back by the microcontroller in the receiver detecting a change in the voltage or current, etc.

In accordance with an embodiment, the communication between the receiver and charger needs to follow a pre-determined protocol, baud rate, modulation depth, etc. and a pre-determined method for hand-shake, establishment of communication, and signaling, etc., as well as optionally methods for providing closed loop control and regulation of power, voltage, etc., in the receiver.

In accordance with an embodiment, a typical wireless power system can be as follows: the charger periodically activates the charger coil driver and powers the charger coil with a drive signal of appropriate frequency. During this 'ping' process, if a receiver coil is placed on or close to the charger coil, power is received through the receiver coil and the receiver circuit is energized. The receiver microcontroller is activated by the received power and begins to perform an initiation process whereby the receiver ID, its presence, power or voltage requirements, receiver or battery temperature or state of charge, manufacturer or serial number and/or other information is sent back to the charger. If this information is verified and found to be valid, then the charger proceeds to provide continuous power to the receiver. The receiver can alternately send an end of charge, over-temperature, battery full, or other messages that will be handled appropriately by the charger and actions performed. The length of the ping process should be configured to be of sufficient length for the receiver to power up its microcontroller and to respond back and for the response to be received and understood and acted upon. The length of time between the pings can be determined by the implementation designer. If the ping process is performed often, the stand-by power use of the charger is higher. Alternately, if the ping is performed infrequently, the system will have a delay before the charger discovers a receiver nearby; so in practice, a balance may be suitable.

Alternatively, in accordance with an embodiment, the ping operation can be initiated upon discovery of a nearby receiver by other means. This provides a very low stand-by

power use by the charger and can be performed by including a magnet in the receiver and a magnet sensor in the charger or through optical, capacitive, weight, NFC or Bluetooth, RFID or other RF communication or other methods for detection.

Alternatively, in accordance with an embodiment, the system can be configured or implemented to be always ON (i.e., the charger coil is powered at an appropriate drive frequency) or pinged periodically and presence of the receiver coil brings the coil to resonance with the receiver coil and power transfer occurs. The receiver in this instance may not even contain a microcontroller and act autonomously and may simply have a regulator in the receiver to provide regulated output power to a device, its skin, case, or battery. In those embodiments in which periodic pinging is performed, the presence of a receiver can be detected by measuring a higher degree of current flow or power transfer or other means, and the charger can simply be kept on to continue transfer of power until either the power drawn falls below a certain level or an end of charge and/or no device present is detected.

In another embodiment, the charger can be in an OFF or standby, or low or no power condition, until a receiver is detected by means of its presence through a magnetic, RF, optical, capacitive or other methods. For example, in accordance with an embodiment the receiver can contain an RFID chip and once it is present on or nearby the charger, the charger can turn on or begin pinging to detect a receiver.

In accordance with an embodiment, the protocol used for communication can be any of, e.g., common RZ, NRZ, Manchester code, etc., used for communication. As described above, the charger can periodically start and apply a ping voltage of pre-determined frequency and length to the charger coil. The receiver is then activated, and can begin to send back communication signals. The communication signal can include an optional preamble that is used to synchronize the detection circuit in the charger and prepare it for detection of communication. A communication containing a data packet may then follow, optionally followed by checksum and parity bits, etc. Similar processes are used in communication systems and similar techniques can be followed. In accordance with an embodiment, the actual data packet can include information such as an ID code for the receiver, a manufacturer's code, received voltage, power, or current values, status of the battery, amount of power in the battery, battery or circuit temperature, end of charge or battery full signals, presence of external wired charger, or a number of the above. Also this packet may include the actual voltage, power, current, etc. value or the difference between the actual value and the desired value or some encoded value that will be useful for the charger to determine how best to regulate the output.

Alternatively, in accordance with an embodiment, the communication signal can be a pre-determined pattern that is repetitive and simply lets the charger know that a receiver is present and/or that the receiver is a valid device within the power range of the charger, etc. Any combination of systems can be configured to provide the required performance.

In accordance with an embodiment, in response to the receiver providing information regarding output power or voltage, etc., the charger can modify voltage, frequency, duty cycle of the charger coil signal or a combination of the above. The charger can also use other techniques to modify the power out of the charger coil and to adjust the received power. Alternatively the charger can simply continue to provide power to the receiver if an approved receiver is detected and continues to be present. The charger can also monitor the current into the charger coil and/or its temperature to ensure that no extra-ordinary fault conditions exist. One example of this type of fault may be if instead of a receiver, a metal object is placed on the charger.

In accordance with an embodiment, the charger can adjust one or more parameters to increase or decrease the power or voltage in the receiver, and then wait for the receiver to provide further information before changing a parameter again, or it can use more sophisticated Proportional Integral Derivative (PIO) or other control mechanism for closing the loop with the receiver and achieving output power control. Alternatively, as described above, the charger can provide a constant output power, and the receiver can regulate the power through a regulator or a charger IC or a combination of these to provide the required power to a device or battery.

Various manufacturers may use different encodings, and also bit rates and protocols. The control process used by different manufacturers or protocols may also differ, further causing interoperability problems between various chargers and receivers. A source of interoperability differences may be the size, shape, and number of turns used for the power transfer coils. Furthermore, depending on the input voltage used, the design of a wireless power system may step up or down the voltage in the receiver depending on the voltage required by a device by having appropriate number of turns in the charger and receiver coils. However, a receiver from one manufacturer may then not be able to operate on another manufacturer charger due to these differences in designs employed.

In accordance with an embodiment, it is therefore beneficial to provide a system that can operate with different receivers or chargers and can be universal. Recently, there has been some movement to standardize the frequency of operation, the coil and electronics characteristics, the identification and communication method, messaging and protocol and other aspects of the systems to allow interoperability between systems from different manufacturers. Several interoperability Standards and Specifications in this area have been established or under consideration. These include the WPC interoperability specification, the Consumer Electronics Association Standard for wireless power, the Alliance for Wireless Power (A4WP), Power Matters Alliance (PMA), the Consumer Electronics Association (CEA) Wireless Power Standards working group and Wireless Power Standards for Electric Vehicle charging, and other international efforts for Specification and Standards development.

The resonant frequency, F of any LC circuit is given by:

$$F = \frac{1}{2\pi\sqrt{LC}}$$

Where L is the Inductance of the circuit or coil in Henry and C is the Capacitance in Farad.

For example, in the system shown in FIG. **3**, one may use the values of C**1** and L**1** in the above calculation for a free running charger and, as a receiver is brought close to this circuit, this value is changed by the mutual coupling of the coils involved. In the example that a ferrite shield layer is used behind a coil in the charger and/or receiver, the inductance of the coil is affected by the permeability of the shield and this modified permeability should be used in the above calculation.

In accordance with an embodiment, to be able to detect and power or charge various receivers, the charger can be

configured such that the initial ping signal is at such a frequency range to initially be able to power and activate the receiver circuitry in any receiver during the ping process. After this initial power up of the receiver, the charger communication circuit should be able to detect and decode the communication signal from the receiver. Many microcontrollers are able to communicate in multiple formats and/or may have different input N D converter pins that can be configured differently to simultaneously receive the communication signal and synchronize and understand the communication at different baud rates and protocols. In accordance with an embodiment, the charger firmware can then decide on which type of receiver is present and proceed to regulate or implement what is required (end of charge, shut-off, fault condition, etc.). Depending on the message received, the charger can then decide to change the charger driver voltage amplitude, frequency, or duty cycle, or a combination of these or other parameters to provide the appropriate regulated output at the receiver output.

In accordance with an embodiment, the charger's behavior can also take into account the difference in the coil geometry, turns ratio, etc. For example, a charger and receiver pair from one or more manufacturers may require operation of the charger drive voltage at 150 kHz. However, if the same receiver is placed on a charger from another manufacturer or driven with different coil or input voltage combination, to achieve the same output power, the charger frequency may need to be 200 kHz. The charger program may detect the type of receiver placed on it and shift the frequency appropriately to achieve a baseline output power and continue regulating from there. In accordance with an embodiment, the charger can be implemented so that it is able to decode and implement multiple communication and regulation protocols and respond to them appropriately. This enables the charger to be provided as part of a multi-protocol system, and to operate with different types of receivers, technologies and manufacturers.

Similar techniques can be used to allow a receiver to be chargeable on chargers utilizing different protocols for communication and control. For example, the receiver may recognize the type of charger being used by deciphering the frequency of the charger operation or its ping (through frequency filtering or other techniques) and communicate using different protocols and communication signals accordingly.

In accordance with an embodiment, for receivers that contain an onboard output stage regulator before the output power, stability of the input voltage to the regulator is not as critical since the regulator performs a smoothing function and keeps the output voltage at the desired level with any output load changes (such as during battery charging). The output of the regulator is then directed to circuitry such as a power management IC (PMIC), or to a battery for charging, or directly connected to the device for use in instances where the receiver acts as a power supply to a device without internal batteries, or a combination of the above. Where an output regulator stage is used in a receiver it is critical for the wireless receiver not to exceed the maximum rated input voltage of the output stage regulator or to drop below a level required so that the output voltage from the regulator could no longer be maintained at the required value. Various types of output stage regulator such as buck, boost, buck-boost, linear etc., can be used as this output stage. However, in general, inclusion of a regulator and/or a charger IC or PMIC chip (for batteries) relaxes the power/voltage regulation requirements of the wireless power receiver portion of the circuit at the expense of the additional size and cost of this component. In accordance with some embodiments, simpler voltage limiting output stages such as Zener diodes, TVS or other voltage limiting or clamping ICs or circuits, can be used.

In accordance with another embodiment, the receiver can also include variable or switchable reactive components (capacitors and/or inductors) that would allow the receiver to change its resonant condition to affect the amount of power delivered to the device, load or battery. The receiver and/or charger and/or their coils can also include elements such as thermistors, magnetic shields or magnetic cores, magnetic sensors, and input voltage filters, for safety and/or emission compliance reasons.

In accordance with an embodiment, the systems described herein can use discrete electronics components or some or all of the functions described above can be integrated into an Application Specific Integrated Circuit (ASIC) or MCMs to achieve smaller footprint, better performance, noise, etc. and/or cost advantages. Such integration is common in the electronics industry and can provide additional advantages here.

While the system above describes a system wherein the communication is primarily through the coil, as described earlier, communication can also be implemented through a separate coil, RF, optical system or a combination of the above. In such circumstances, a multi-protocol system can also be used to interoperate between systems with different communication and/or control protocols or even means of communication.

Flexible Systems with Multiple Protocols and Technologies

In accordance with an embodiment, a receiver or receivers placed on or near a charger can communicate with the charger in a variety of communication protocols according to different wireless charging standards, protocols or different proprietary methods. To distinguish them and provide for efficient operation, the charger can be programmed to recognize different messages received, and operate differently.

For example, different protocols exist for communication and control for charging a single receiver placed on a charger. Some systems may require the charger to control the voltage output from the receiver coil (that is rectified and sent to an output of the system or to a regulator) within a tight tolerance, and cannot tolerate a large range. An example of such a protocol or standard is the Wireless Power Consortium (WPC) or Chi, A4WP, PMA or other standard which is designed to provide tight receiver coil output voltage tolerances and also requires charger frequency range of 110 to 205 kHz or higher. In accordance with an embodiment a charger system can be configured so that it recognizes such a receiver and controls the output to within its target range. However, in other instances receivers may be designed as described above that can tolerate a larger V_1 range by using an output receiver regulator stage to allow multi-receiver charging.

In accordance with an embodiment, to address these use cases, the charger hardware, firmware or software can be configured to recognize the presence of such receivers and operate using a different algorithm to keep one or several receiver voltage ranges to within a larger acceptable range, and provide multi-receiver charging capability. This allows one charger to be interoperable with two or more protocols and systems.

In accordance with an embodiment, the charger systems or protocols can employ different power transfer and/or communication frequencies, or different communication methods (e.g., in-band through coil, and out of band through Wi-Fi or Bluetooth or proprietary systems) to communicate

and also transfer power to receivers utilizing different protocols. The approaches described herein can be used to enable interoperability between such systems.

In accordance with an embodiment, the charger can use one or more driving circuits, communication methods or protocols and/or charger power or communication coils or antennas to simultaneously power different receiver coils utilizing different protocols, standards and/or power levels or voltages.

In accordance with an embodiment, the charger coil and resonant capacitor are tuned to provide the operating frequency of the charger, and the associated receiver and its resonant capacitor is similarly tuned to the vicinity of the same frequency for optimal power transfer. It is possible to provide and control power to two or more receivers simultaneously with one or more charger coils, by multiplexing the power transfer frequency.

In accordance with another embodiment, the charger can contain several resonant capacitors, such as C**1** illustrated in FIG. **2**, which can be switched to form resonances with the charger coil L**1**, and to provide charger resonances at different frequencies. For example, depending on the protocol of the receiver, the charger can be configured to switch to use a different C**1** in series with its coil to optimize power transfer at the preferred operating frequency of receivers from different protocols.

In accordance with an embodiment, the charger can first use one C**1** value and perform a ping operation to discover receivers adhering to a frequency of operation with that capacitor value and with the appropriate communication protocol. If an appropriate receiver is discovered, it can continue to provide power at that frequency and protocol. If no such receiver is found, it can switch to use a different value of C**1**, and repeat the ping and rotate between different C**1** values and ping frequencies until appropriate receiver or receivers are discovered. An advantage of using several capacitors and switching between them for different protocols and/or operating frequencies is that higher power transfer efficiencies and/or communication may be obtained compared to using a fixed C**1** value.

Multi-Device Charging

FIG. **17** illustrates a charger **230** for use in coupling to a blade type receiver in the outer perimeter of the charger surface, which can be used to power a device or receiver having a geometry similar to that shown in FIG. **7** or **8**, in this example an electronic glasses device **232**.

In accordance with an embodiment, the system allows mixing or combining of different technologies on the same charger and/or receiver, or different locations or areas of the same charger. As an illustrative example, it may be desirable to charge two types of device simultaneously with different characteristics. For example, FIG. **18** and FIG. **19** show embodiments **240**, **250** wherein the charger includes a large magnetic/ferrite layer below. A plurality (e.g., two or more) separate coil structures are used on top of the magnetic layer in the charger to provide, in this example, two or more different sections (areas) with different operating principles or protocols and/or driving and/or communication sections.

In the example shown in FIG. **18**, the central portion can use one central coil to create a flux guide charge section, as described above in accordance with the embodiment in FIG. **5**. In conjunction with an appropriate flux guide type of receiver coil, this can provide position-independent charging or power transfer in this central section. In addition, as further shown in FIG. **18**, another larger coil area can be integrated into the charger and used to create a larger charger area to be used with a receiver similar to the solenoid or blade type receiver coils described above.

In accordance with an embodiment, since the operating frequency of each coil is defined by its inductance and associated resonant capacitor, the embodiments of the system shown in FIGS. **18** and **19** can be provided so that the two coils operate either in similar, or in completely different, frequency range (frequency multiplexing) to power any associated receivers. In accordance with an embodiment, each coil can be driven by a separate driver circuit and communicate with the associated receivers using load modulation, RF or optical communication channels or combination thereof as described earlier, and can be completely independent.

In accordance with another embodiment **260** shown in FIG. **20**, two charger coils for charging two different types of devices or receivers can be provided as distinct coils that are physically separated from one another in space and location. For example, a charger coil can be used to provide magnetic field and efficient coupling to a blade type receiver in the outer perimeter of a charger surface and used to power a receiver in a geometry similar to shown in FIG. **7** or **8**, while a charger optimized for flux guide power transfer (using a geometry such as that shown in FIGS. **5** and **6**) can be used in the center of the charger.

In accordance with an embodiment, the two coils can be distinct or driven by different power drivers and/or use different communication systems and/or protocols. As an example, one of the coils and its associated electronics may use in-band or load modulation for communication and control, and the other one may use out of band or RF communication. The two different sections can also use different or same frequency for power transfer as needed to optimize performance for the associated receivers.

In accordance with an embodiment, each charger section can also charge or power multiple receivers placed on that section. As can be seen, such an embodiment allows the system designer to optimize the performance of a charger to power or charge multiple device types appropriately. In the example shown in FIG. **20**, an electronic display device with a very narrow and small receiver area can be charged position-free when it is placed on the outer regions of the pad, while another device such as a mobile phone with a receiver that may be larger (e.g., with a flat coil with flux guide as shown on the back of the device) can be charged in the central area of the charger. Such a combined performance charger may be useful in various applications, and for an end-user.

The above description and embodiments are not intended to be exhaustive, and are instead intended to only show some examples of the rich and varied products and technologies that can be envisioned and realized by various embodiments. It will be evident to persons skilled in the art that these and other embodiments can be combined to produce combinations of above techniques, to provide useful effects and products.

Some aspects of embodiments of the present invention can be conveniently implemented using a conventional general purpose or a specialized digital computer, microprocessor, or electronic circuitry programmed according to the teachings of the present disclosure. Appropriate software coding can readily be prepared by skilled programmers and circuit designers based on the teachings of the present disclosure, as will be apparent to those skilled in the art.

In some embodiments, the present invention includes a computer program product which is a storage medium (media) having instructions stored thereon which can be

used to program a computer to perform any of the processes of the present invention. The storage medium can include, but is not limited to, any type of disk including floppy disks, optical discs, DVD, CD-ROMs, microdrive, and magneto-optical disks, ROMs, RAMs, EPROMs, EEPROMs, DRAMs, VRAMs, flash memory devices, magnetic or optical cards, nanosystems (including molecular memory ICs), or any type of media or device suitable for storing instructions and/or data.

The foregoing description of the present invention has been provided for the purposes of illustration and description. It is not intended to be exhaustive or to limit the invention to the precise forms disclosed. Many modifications and variations will be apparent to the practitioner skilled in the art. The embodiments were chosen and described in order to best explain the principles of the invention and its practical application, thereby enabling others skilled in the art to understand the invention for various embodiments and with various modifications that are suited to the particular use contemplated. It is intended that the scope of the invention be defined by the following claims and their equivalents.

What is claimed is:

1. A system for inductive power transfer comprising:

a charger, wherein the charger is an inductive charger, and the charger includes:

a printed circuit board having a charger coil, wherein the charger coil has a substantially planar charger surface;

a substantially planar magnetic layer under the charger coil opposite the charger surface; and

a charger drive circuit, wherein the charger drive circuit includes a resonant capacitor and a FET switch to apply an alternating voltage to the charger coil; and

a first mobile device that includes a receiver to inductively receive power for the first mobile device, wherein the receiver includes:

a solenoid, wherein the solenoid includes:

a magnetic core having a relative magnetic permeability exceeding 1 and having first and second ends; and

Litz wire wrapped around a section of the magnetic core forming a wire wound section around the magnetic core, with the magnetic core extending beyond the wire wound section; and

a receiver electronic circuit, wherein the receiver electronic circuit includes a resonant capacitor and a rectifier; and

wherein:

the charger further includes a means for positioning the receiver in a power transfer position, proximate to the charger surface, to inductively transfer power to the receiver of the first mobile device;

the charger drive circuit is configured to drive the charger coil at one or more operating frequencies to inductively transfer power from the charger to the receiver when the receiver is positioned in the power transfer position, wherein when the receiver is positioned in the power transfer position, a tuned circuit, including the charger coil and the resonant capacitor of the charger drive circuit and the solenoid and the resonant capacitor of the receiver electronic circuit, has a resonant frequency that allows the charger to transfer the power to the receiver at the one or more operating frequencies;

the charger coil includes a conductor patterned to include multiple, substantially concentric turns for generating a magnetic flux through a first end of the solenoid when the receiver is placed in the power transfer position, wherein an outermost of the concentric turns defines a perimeter of a charger coil area;

the multiple concentric turns, when driven by the charger drive circuit, generate a magnetic field that is substantially perpendicular to the charger surface at a geometric center of the charger coil area,

the charger coil area is larger than an area of the first end and larger than an area of the second end of the magnetic core of the solenoid;

the magnetic layer of the charger extends beyond the charger coil area; and

when the receiver is in the power transfer position, the first end of the magnetic core is located proximate to the charger coil area above the charger surface to receive magnetic flux from the charger coil area and guide the magnetic flux in a closed magnetic loop from the charger coil area through the solenoid and return through the charger magnetic layer to the charger coil area to form the closed magnetic loop.

2. The system of claim **1**, wherein the charger coil is a single coil.

3. The system of claim **1**, wherein when positioned in the power transfer position, a winding axis of the solenoid is positioned perpendicular to the charger surface.

4. The system of claim **1**, wherein when the receiver is positioned in the power transfer position and when the charger is operated at an operating frequency near the resonance frequency of the tuned circuit to inductively transfer power from the charger to the receiver, the transfer of power from the charger to the receiver has a power transfer efficiency that exceeds 50%, wherein the power transfer efficiency is defined by power out of a rectifier in the receiver electronic circuit divided by power into the charger drive circuit.

5. The system of claim **1**, wherein the charger coil area is at least ten times larger than the area of each of the ends of the magnetic core of the solenoid.

6. The system of claim **1**, wherein the charger coil area is at least fifty times larger than the area of each of the ends of the magnetic core of the solenoid.

7. The system of claim **1**, wherein the magnetic core of the solenoid has a cross sectional dimension in at least one end of 1 to 2 mm and has a length along a winding axis of 10 to 20 mm.

8. The system of claim **1**, wherein the Litz wire is selected for operation at a frequency of greater than 205 kHz.

9. The system of claim **1**, wherein when the receiver is positioned in the power transfer position, a winding axis of the solenoid is positioned at an angle relative to an axis perpendicular to the charger surface, wherein the angle is one of any angles relative to the axis perpendicular to the charger surface.

10. The system of claim **1**, wherein the magnetic core of the solenoid comprises Ferrite material and the charger magnetic layer comprises Ferrite material.

11. The system of claim **1**, wherein a center of the first end of the solenoid is positioned 1 mm or more away from the charger surface when the receiver is positioned in the power transfer position.

12. The system of claim **1**, wherein when the receiver is positioned in the power transfer position, the magnetic core of the solenoid extends beyond the charger coil area in a preferential direction and the charger magnetic layer is also extended in the preferential direction so that the magnetic

flux returned during the provision of power to the mobile device flows from the solenoid back to the charger coil to close the magnetic loop.

13. The system of claim **1**, wherein:

the charger is incorporated into a second mobile device;

the second mobile device includes an internal, rechargeable battery;

the second mobile device uses the internal battery to transfer power to and operate the charger for a period of time; and

the first and second mobile devices comprise Bluetooth communication systems to communicate with each other during non-power transfer operations.

14. The system of claim **13**, wherein no communication between the charger and the receiver occurs during power transfer.

15. The system of claim **13**, wherein the second mobile device further includes:

an additional inductive charger, wherein the additional inductive charger includes an additional charger coil to transfer power to additional mobile devices.

16. The system of claim **13**, wherein the receiver of the first mobile device is a first receiver, and the second mobile device includes a second receiver to inductively receive power to charge the internal, rechargeable battery of the second mobile device.

17. The system of claim **1**, wherein:

the receiver and the charger include communication and control electronics circuits to communicate, between the receiver and the charger, information associated with the transfer of power to the first mobile device; and

the communication is through a charger antenna that includes the charger coil and a receiver antenna that includes the solenoid.

18. The system of claim **1**, wherein the charger is incorporated into an enclosed volume for placement of the receiver in the power transfer position to receive inductive power.

19. The system of claim **1**, wherein the charger initiates transferring power to the mobile device when a presence of the receiver in the power transfer position is detected.

20. The system of claim **1**, wherein the magnetic field from the system is guided and contained so that residual electromagnetic emissions near the system are within safe compliance values.

21. The system of claim **1** further comprising:

an energy storage device coupled to the receiver, wherein when the transfer of power to the receiver occurs, the transferred power charges the energy storage device.

22. The system of claim **21** wherein the energy storage device includes a battery.

23. The system of claim **1**, wherein the first mobile device is a member of a group consisting of: a remote controller, a mouse, a wearable electronic glass, and a head-mounted display device.

24. The system of claim **1**, wherein the means for positioning includes one or more magnets to position the receiver in the power transfer position.

25. The system of claim **1**, wherein the means for positioning includes one or more members of a group consisting of visual, physical, or magnetic means to assist in positioning the receiver in the power transfer position.

26. A charger for inductive charging, the charger comprising:

a printed circuit board having a charger coil, wherein the charger coil has a substantially planar charger surface;

a substantially planar magnetic layer under the charger coil opposite the charger surface;

a charger drive circuit, wherein the charger drive circuit includes a resonant capacitor and a FET switch to apply an alternating voltage to the charger coil; and

means for positioning a receiver in a power transfer position, which is proximate to the charger surface, to inductively transfer power to the receiver, wherein the receiver is included in a mobile device to inductively receive power for the mobile device, and the receiver includes:

a solenoid, wherein the solenoid includes:

a magnetic core having a relative magnetic permeability exceeding 1 and having first and second ends; and

Litz wire wrapped around a section of the magnetic core forming a wire wound section around the magnetic core, with the magnetic core extending beyond the wire wound section; and

a receiver electronic circuit, wherein the receiver electronic circuit includes a resonant capacitor and a rectifier; and

wherein:

the charger drive circuit is configured to drive the charger coil at one or more operating frequencies to inductively transfer power from the charger to the receiver when the receiver is positioned in the power transfer position, wherein when the receiver is positioned in the power transfer position, a turned circuit, which includes the charger coil and the resonant capacitor of the charger drive circuit and the solenoid and the resonant capacitor of the receiver electronic circuit, has a resonant frequency that allows the charger to transfer the power to the receiver at the one or more operating frequencies;

the charger coil includes a conductor patterned to include multiple, substantially concentric turns for generating a magnetic flux through a first end of the solenoid when the receiver is placed in the power transfer position, wherein an outermost of the concentric turns defines a perimeter of a charger coil area;

the multiple substantially concentric turns, when driven by the charger drive circuit, generate a magnetic field that is substantially perpendicular to the charger surface at a geometric center of the charger coil area,

the charger coil area is larger than an area of the first end and larger than the area of the second end of the magnetic core of the solenoid;

the magnetic layer of the charger extends beyond the charger coil area; and

when the receiver is in the power transfer position, the first end of the magnetic core is located proximate to the charger coil area above the charger surface to receive magnetic flux from the charger coil area and guide the magnetic flux in a closed magnetic loop from the charger coil area through the solenoid and return through the charger magnetic layer to the charger coil area to form the closed magnetic loop.

27. The charger of claim **26**, wherein the charger coil is a single coil.

28. The charger of claim **26**, wherein when positioned in the power transfer position, a winding axis of the solenoid is positioned at an angle relative to an axis perpendicular to the charger surface, wherein the angle is one of any angle relative to the axis perpendicular to the charger surface.

29. A mobile device that receives power inductively, the mobile device comprising:

a receiver to inductively receive power for the mobile device; wherein:

the receiver includes:

a solenoid, wherein the solenoid includes:

a magnetic core having a relative magnetic permeability exceeding 1 and having first and second ends; and

a Litz wire wrapped around a section of the magnetic core forming a wire wound section around the magnetic core, with the magnetic core extending beyond the wire wound section; and

a receiver electronic circuit, wherein the receiver electronic circuit includes a resonant capacitor and a rectifier; and

when the receiver is positioned proximate to a charger surface of an inductive charger, the receiver receives power from the charger, and the charger includes:

a printed circuit board having a charger coil, wherein the charger surface is a substantially planar surface of the charger coil;

a substantially planar magnetic layer under the charger coil opposite the charger surface;

a charger drive circuit, wherein the charger drive circuit includes a resonant capacitor and a FET switch to apply an alternating voltage to the charger coil; and

means for positioning the receiver in a power transfer position, which is proximate to the charger, to inductively transfer power to the receiver of the mobile device;

wherein:

the charger drive circuit is configured to drive the charger coil at one or more operating frequencies to inductively transfer power from the charger to the receiver when the receiver is positioned in the power transfer position, wherein when the receiver is positioned in the power transfer position, a tuned circuit, which includes the charger coil and the resonant capacitor of the charger drive circuit and the solenoid and the resonant capacitor of the receiver electronic circuit, has a resonant frequency that allows the charger to transfer the power to the receiver at the one or more operating frequencies;

the charger coil includes a conductor patterned to include multiple, substantially concentric turns for generating a magnetic flux through a first end of the solenoid when the receiver is placed in the power transfer position, wherein an outermost of the concentric turns defines a perimeter of a charger coil area;

the multiple concentric turns, when driven by the charger drive circuit, generate a magnetic field that is substantially perpendicular to the charger surface at the charger surface at a geometric center of the charger coil area,

the charger coil area is larger than an area of the first end and larger than an area of the second end of the magnetic core of the solenoid;

the magnetic layer of the charger extends beyond the charger coil area; and

when the receiver is in the power transfer position, the first end of the magnetic core is located proximate to the charger coil area above the charger surface to receive magnetic flux from the charger coil area and guide the magnetic flux in a closed magnetic loop from the charger coil area through the solenoid and return through the charger magnetic layer to the charger coil area to form the closed magnetic loop.

30. A method for inductive power transfer to a mobile device, wherein the mobile device includes a receiver, the method comprising:

positioning the receiver in a power transfer position to inductively receive power from an inductive charger; and

inductively transferring power from the charger to the receiver of the mobile device;

wherein:

the charger includes:

a printed circuit board having a charger coil, wherein the charger coil has a substantially planar charger surface, and the charger coil includes a conductor patterned to include multiple, substantially concentric turns and an outermost of the concentric turns defines a perimeter of a charger coil area;

a substantially planar magnetic layer under the charger coil opposite the charger surface, wherein the magnetic layer of the charger extends beyond the charger coil area; and

a charger drive circuit, wherein the charger drive circuit includes a resonant capacitor and a FET switch to apply an alternating voltage to the charger coil;

the receiver includes:

a solenoid, wherein the solenoid includes:

a magnetic core having a relative magnetic permeability exceeding 1 and having first and second ends; and

Litz wire wrapped around a section of the magnetic core forming a wire wound section around the magnetic core, with the magnetic core extending beyond the wire wound section; and

a receiver electronic circuit, wherein the receiver electronic circuit includes a resonant capacitor and a rectifier; and

inductively transferring power from the charger to the receiver comprises:

driving the charger coil with the charger driver circuit at one or more operating frequencies to inductively transfer power from the charger to the receiver when the receiver is positioned in the power transfer position, wherein when the receiver is positioned in the power transfer position, a turned circuit, which includes the charger coil and the resonant capacitor of the charger drive circuit and the solenoid and the resonant capacitor of the receiver electronic circuit, has a resonant frequency that allows the charger to transfer the power to the receiver at the one or more operating frequencies;

generating a magnetic field that is substantially perpendicular to the charger surface at a geometric center of the charger coil area; and

generating magnetic flux through the charger coil and through a first end of the solenoid when the receiver is placed in the power transfer position; and

when the receiver is in the power transfer position, the first end of the magnetic core is located proximate to

the charger coil area above the charger surface to receive the magnetic flux from the charger coil area and guide the magnetic flux in a closed magnetic loop from the charger coil area through the solenoid and return through the charger magnetic layer to the charger coil area to form the closed magnetic loop.

* * * * *