US008975523B2

(12) **United States Patent**
Silva

(10) **Patent No.: US 8,975,523 B2**
(45) **Date of Patent: Mar. 10, 2015**

(54) **OPTIMIZED LITZ WIRE**

(75) Inventor: **Arturo Silva**, Allen, TX (US)

(73) Assignee: **Flextronics AP, LLC**, Broomfield, CO (US)

(*) Notice: Subject to any disclaimer, the term of this patent is extended or adjusted under 35 U.S.C. 154(b) by 351 days.

(21) Appl. No.: **12/473,497**

(22) Filed: **May 28, 2009**

(65) **Prior Publication Data**

US 2009/0295531 A1 Dec. 3, 2009

Related U.S. Application Data

(60) Provisional application No. 61/056,706, filed on May 28, 2008.

(51) **Int. Cl.**

H01B 5/08	(2006.01)
H01F 3/14	(2006.01)
H01F 3/10	(2006.01)
H01F 27/34	(2006.01)
H01F 37/00	(2006.01)
H01F 17/00	(2006.01)
H05K 1/16	(2006.01)

(52) **U.S. Cl.**

CPC .. ***H01F 3/14*** (2013.01); ***H01F 3/10*** (2013.01); ***H01F 27/346*** (2013.01); *H01F 37/00* (2013.01); *H01F 2017/0093* (2013.01); *H05K 1/165* (2013.01)

USPC **174/128.2**

(58) **Field of Classification Search**

USPC 174/128.1, 128.2

See application file for complete search history.

(56) **References Cited**

U.S. PATENT DOCUMENTS

931,542	A *	8/1909	Hertzberg	336/206
4,051,425	A	9/1977	Smith	
4,273,406	A	6/1981	Okagami	
4,490,690	A	12/1984	Suzuki	
4,642,588	A	2/1987	Kameya	
4,686,495	A	8/1987	Kameya	
4,695,812	A	9/1987	Kameya	

(Continued)

FOREIGN PATENT DOCUMENTS

CN	2092848	U	1/1992
CN	2650300	Y	10/2004
JP	2008-159403	A	7/2008

OTHER PUBLICATIONS

R. Colin Johnson, "Team claims Midrange Wireless Energy Transfer", EE Times.com, Nov. 20, 2006, 4 pages.

(Continued)

Primary Examiner — Chau N Nguyen

(74) *Attorney, Agent, or Firm* — Haverstock & Owens LLP

(57) **ABSTRACT**

A conductive cable for reducing the power losses in components, such as inductors and transformers. The conductive cable includes multiple strands that each include an inner conductor and an outer insulating layer. The conductive cable includes strands of multiple cross-sectional areas (multiple gauges), such that the power losses associated with the skin effect may be reduced. The cross-sectional areas of the strands of the conductive cable may be selected dependent upon the frequency content of the current that they are intended to carry. In the case of a PFC boost converter, the various cross-sectional areas of the strands may be selected to carry the harmonics of and AC power source, as well as higher frequency current caused by a switch associated with the PFC boost converter.

16 Claims, 6 Drawing Sheets

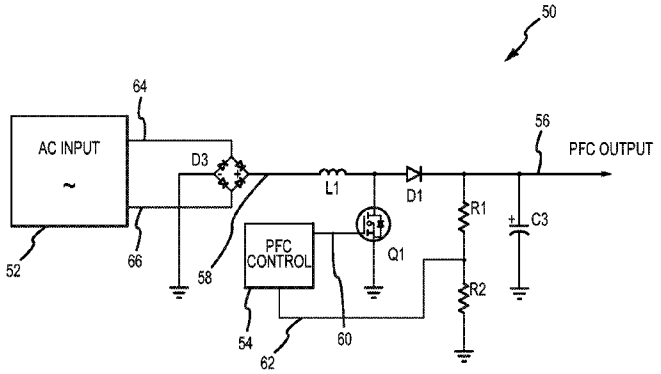

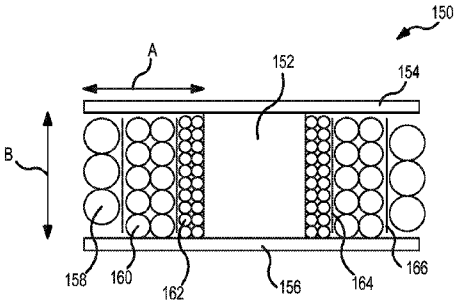

SAMSUNG EXHIBIT 1019

(56) **References Cited**

U.S. PATENT DOCUMENTS

4,695,933	A	9/1987	Nguyen et al.	
4,712,160	A	12/1987	Sato et al.	
4,788,626	A	11/1988	Neidig et al.	
4,890,217	A	12/1989	Conway	
4,893,227	A	1/1990	Gallios et al.	
4,899,256	A	2/1990	Sway-Tin	
4,975,821	A	12/1990	Lethellier	
4,980,517	A *	12/1990	Cardas	174/129 R
5,038,264	A	8/1991	Steigerwald	
5,101,322	A	3/1992	Ghaem et al.	
5,164,657	A	11/1992	Gulczynski	
5,235,491	A	8/1993	Weiss	
5,262,932	A	11/1993	Stanley et al.	
5,295,044	A	3/1994	Araki et al.	
5,438,294	A	8/1995	Smith	
5,490,052	A	2/1996	Yoshida et al.	
5,517,755	A *	5/1996	Wright	29/843
5,565,761	A	10/1996	Hwang	
5,565,781	A	10/1996	Dauge	
5,592,128	A	1/1997	Hwang	
5,673,185	A	9/1997	Albach et al.	
5,694,030	A	12/1997	Sato et al.	
5,712,772	A	1/1998	Telefus et al.	
5,742,151	A	4/1998	Hwang	
5,747,977	A	5/1998	Hwang	
5,786,687	A	7/1998	Faulk	
5,798,635	A	8/1998	Hwang et al.	
5,804,950	A	9/1998	Hwang et al.	
5,811,895	A	9/1998	Suzuki et al.	
5,818,207	A	10/1998	Hwang	
5,870,294	A	2/1999	Cyr	
5,894,243	A	4/1999	Hwang	
5,903,138	A	5/1999	Hwang et al.	
5,905,369	A	5/1999	Ishii et al.	
5,920,466	A	7/1999	Hishara	
5,923,543	A	7/1999	Choi	
5,929,734	A	7/1999	Weiner	
6,058,026	A	5/2000	Rozman	
6,069,803	A	5/2000	Cross	
6,078,010	A *	6/2000	Funahashi et al.	174/126.1
6,091,233	A	7/2000	Hwang et al.	
6,091,611	A	7/2000	Lanni	
6,160,725	A	12/2000	Jansen	
6,272,015	B1	8/2001	Mangtani	
6,282,092	B1	8/2001	Okamoto et al.	
6,326,740	B1	12/2001	Chang et al.	
6,341,075	B2	1/2002	Yasumura	
6,344,980	B1	2/2002	Hwang et al.	
6,366,483	B1	4/2002	Ma et al.	
6,396,277	B1	5/2002	Fong et al.	
6,407,514	B1	6/2002	Glaser et al.	
6,437,249	B1 *	8/2002	Higashiura et al.	174/120 R
6,469,914	B1	10/2002	Hwang et al.	
6,469,980	B1	10/2002	Takemura et al.	
6,483,281	B2	11/2002	Hwang	
6,487,095	B1	11/2002	Malik et al.	
6,531,854	B2	3/2003	Hwang	
6,541,944	B2	4/2003	Hwang	
6,583,999	B1	6/2003	Spindler et al.	
6,605,930	B2	8/2003	Hwang	
6,624,729	B2	9/2003	Wright et al.	
6,657,417	B1	12/2003	Hwang	
6,661,327	B1	12/2003	Funk	
6,671,189	B2	12/2003	Jansen et al.	
6,674,272	B2	1/2004	Hwang	
6,765,298	B2	7/2004	Chin et al.	
6,831,846	B2	12/2004	Yasumura	
6,879,237	B1	4/2005	Viarouge et al.	
6,958,920	B2	10/2005	Mednik et al.	
6,970,366	B2	11/2005	Apeland et al.	
7,035,126	B1	4/2006	Lanni	
7,038,406	B2	5/2006	Wilson	
7,047,059	B2	5/2006	Avrin et al.	
7,064,497	B1	6/2006	Hsieh	
7,167,384	B2	1/2007	Yasumura	
7,212,420	B2	5/2007	Liao	
7,230,835	B1	6/2007	Ahmad	
7,286,374	B2	10/2007	Yasumura	
7,286,376	B2	10/2007	Yang	
7,289,329	B2	10/2007	Chen et al.	
7,301,785	B2	11/2007	Yasumura	
7,321,285	B2	1/2008	Hung et al.	
7,324,354	B2	1/2008	Joshi et al.	
7,339,801	B2	3/2008	Yasumura	
7,375,608	B2	5/2008	Suzuki et al.	
7,388,762	B2	6/2008	Yasumura	
7,420,451	B2	9/2008	Lee	
7,423,887	B2	9/2008	Yasumura	
7,450,388	B2	11/2008	Beihoff et al.	
7,499,301	B2	3/2009	Zhou	
7,570,497	B2	8/2009	Jacques et al.	
7,583,513	B2	9/2009	Boggs et al.	
7,639,520	B1	12/2009	Zansky et al.	
7,764,515	B2	7/2010	Jansen et al.	
7,989,895	B2	8/2011	White et al.	
2002/0011823	A1	1/2002	Lee	
2002/0092668	A1 *	7/2002	Groegl et al.	174/105 R
2003/0034743	A1 *	2/2003	Chen	315/247
2003/0035303	A1	2/2003	Balakrishnan et al.	
2004/0016117	A1	1/2004	Wyrzykowska et al.	
2004/0037050	A1	2/2004	Nakayama et al.	
2004/0040744	A1	3/2004	Wyrzykowska et al.	
2004/0056749	A1	3/2004	Kahlmann et al.	
2004/0072467	A1	4/2004	Jordan et al.	
2004/0150970	A1	8/2004	Lee	
2004/0228153	A1	11/2004	Cao et al.	
2005/0029013	A1	2/2005	Lee	
2005/0041976	A1	2/2005	Sun et al.	
2005/0063166	A1	3/2005	Boggs et al.	
2005/0073818	A1	4/2005	Hirano et al.	
2005/0105224	A1	5/2005	Nishi	
2005/0281425	A1	12/2005	Greuet et al.	
2006/0176719	A1	8/2006	Uruno et al.	
2006/0284697	A1	12/2006	Lin et al.	
2006/0289196	A1 *	12/2006	Lee et al.	174/110 R
2007/0007933	A1	1/2007	Chan et al.	
2007/0180684	A1	8/2007	Wada et al.	
2007/0192559	A1	8/2007	Betsui	
2007/0236967	A1	10/2007	Liu et al.	
2008/0174396	A1	7/2008	Choi et al.	
2008/0245556	A1	10/2008	Bird et al.	
2008/0250373	A1	10/2008	Bird et al.	
2009/0014206	A1	1/2009	Motohashi et al.	
2009/0015345	A1	1/2009	Kushta et al.	
2009/0045889	A1	2/2009	Goergen et al.	
2009/0152963	A1	6/2009	Winkler et al.	
2009/0224785	A1	9/2009	Breinlinger et al.	
2009/0231887	A1	9/2009	Ye et al.	
2009/0290384	A1	11/2009	Jungreis	
2009/0290385	A1	11/2009	Jungreis	
2010/0071948	A1	3/2010	Wei	

OTHER PUBLICATIONS

R. Colin Johnson, "Wireless Beacon Could Recharge Consumer Devices", EE Times.com, Jan. 11, 2007, 3 page.

Hang-Seok Choi et al. "Novel Zero-Voltage and Zero-Current-Switching (ZVZCS) Full-Bridge PWM Converter Using Coupled Output Inductor", Sep. 2002 IEEE, pp. 641-648.

Juan Rivas et al. "New Architectures for Radio-Frequency dc/dc Power Conversion", Laboratory for Electromagnetic and Electronic Systems, Massachusetts Institute of Technology, Jan. 2004, pp. 4074-4084.

Scollo P. Fischera R., "Electronic Transformer for a Halogen Lamp", ST Microelectronics, Jan. 1999, pp. 1-4.

* cited by examiner

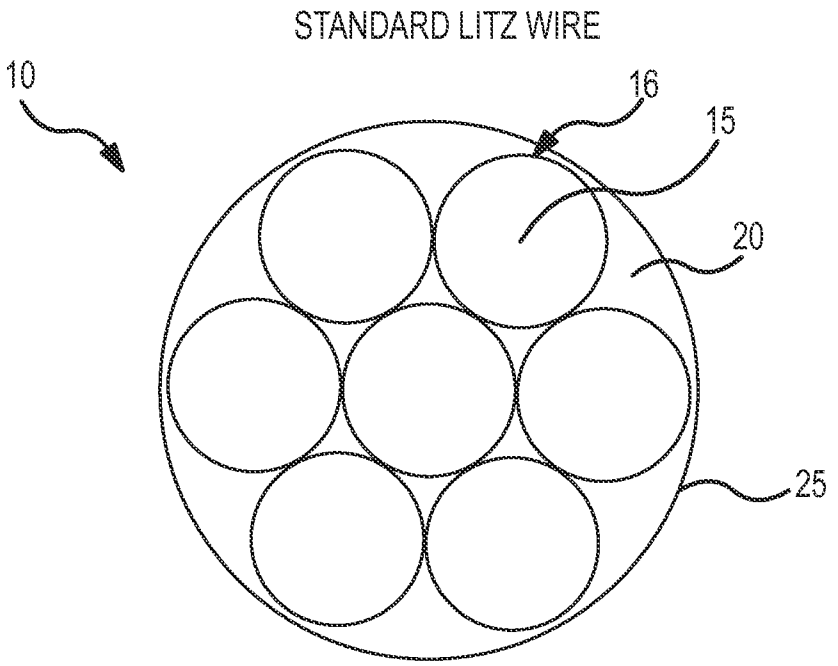

FIG.1
(PRIOR ART)

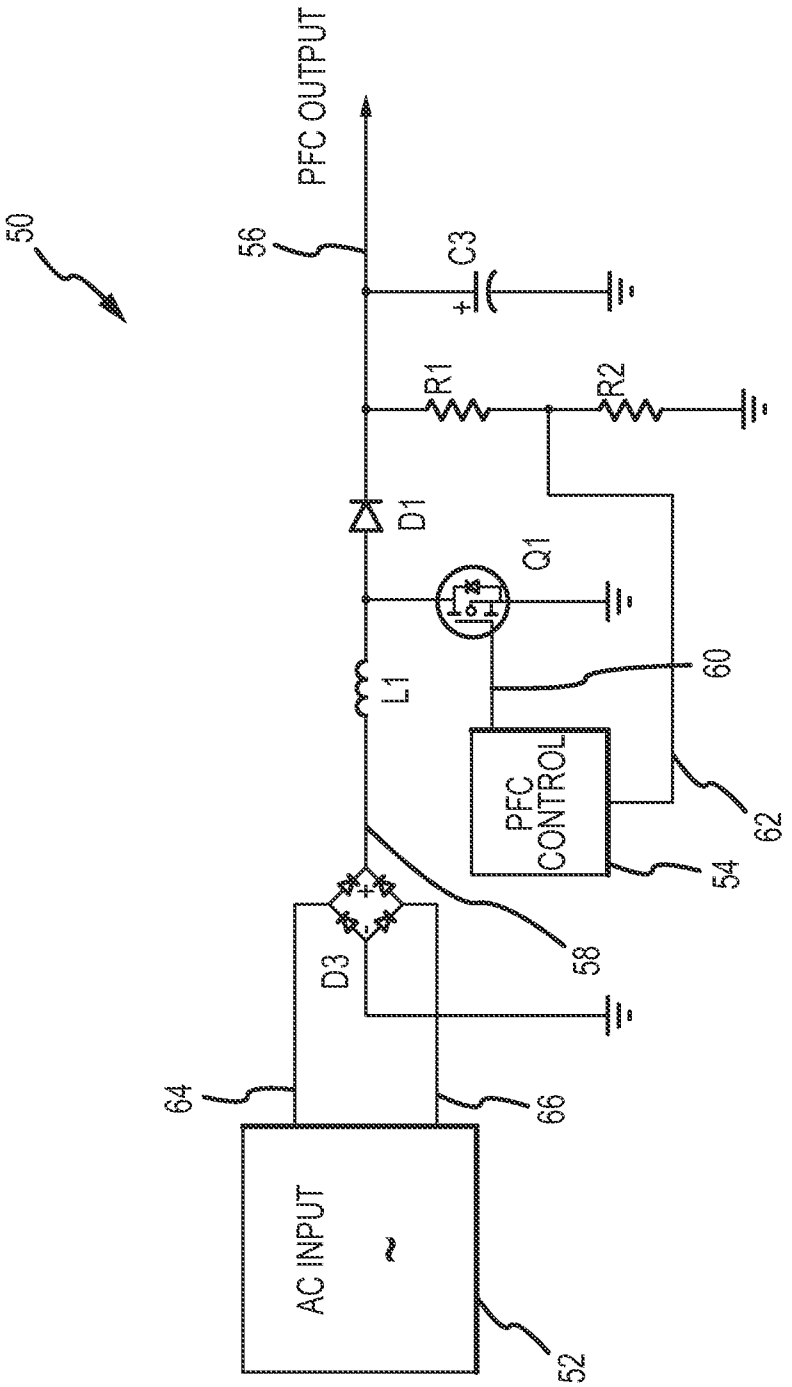
50
PFC OUTPUT
56
C3
R1
R2
D1
Q1
L1
60
PFC CONTROL
62
54
58
D3
64
66
AC INPUT
~
52

FIG.2

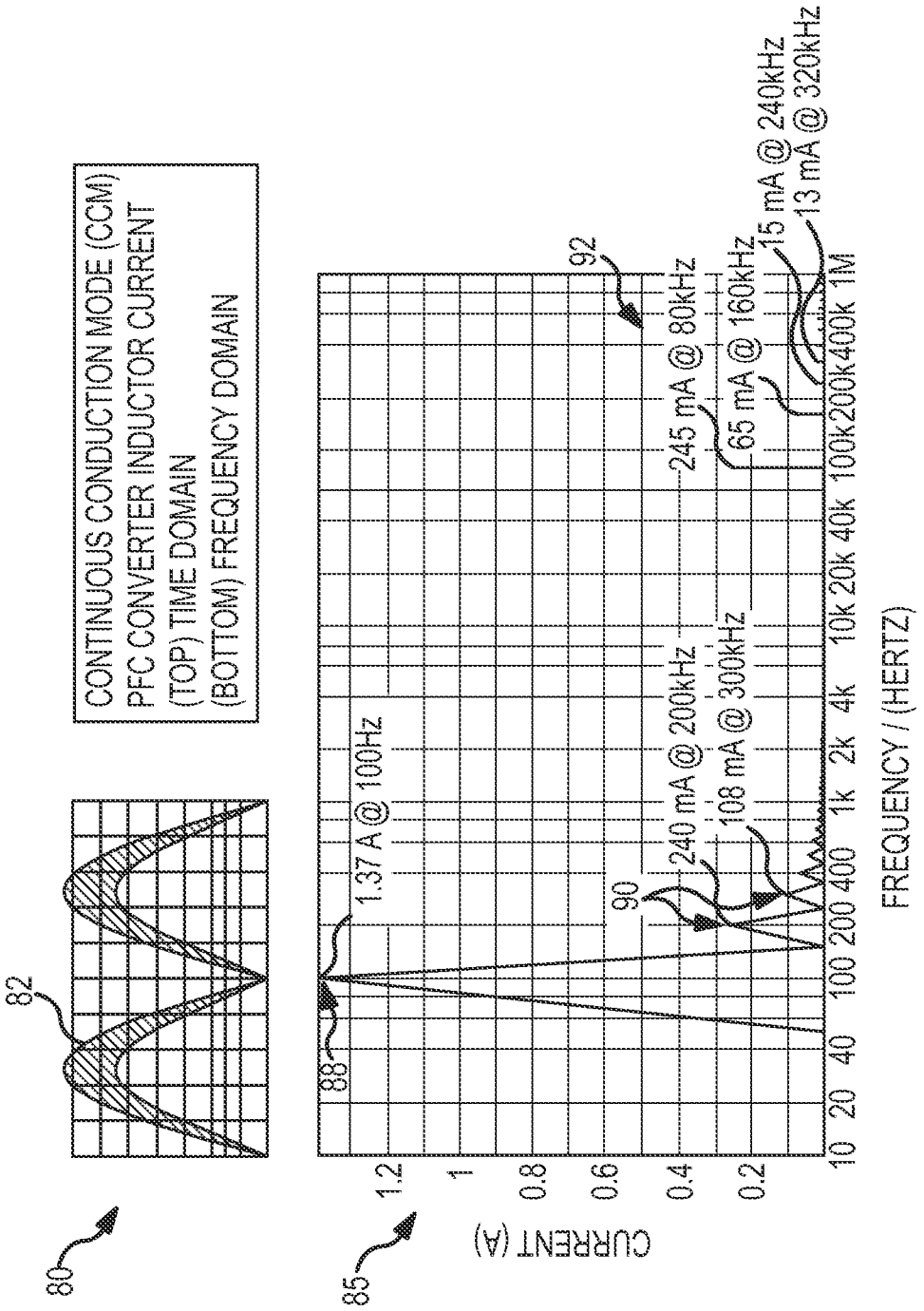
CONTINUOUS CONDUCTION MODE (CCM)
PFC CONVERTER INDUCTOR CURRENT
(TOP) TIME DOMAIN
(BOTTOM) FREQUENCY DOMAIN
80
82
85
88
90
92
1.37 A @ 100Hz
240 mA @ 200kHz
108 mA @ 300kHz
245 mA @ 80kHz
65 mA @ 160kHz
15 mA @ 240kHz
13 mA @ 320kHz
CURRENT (A)
1.2
1
0.8
0.6
0.4
0.2
10 20 40 100 200 400 1k 2k 4k 10k 20k 40k 100k 200k 400k 1M
FREQUENCY / (HERTZ)

FIG.3

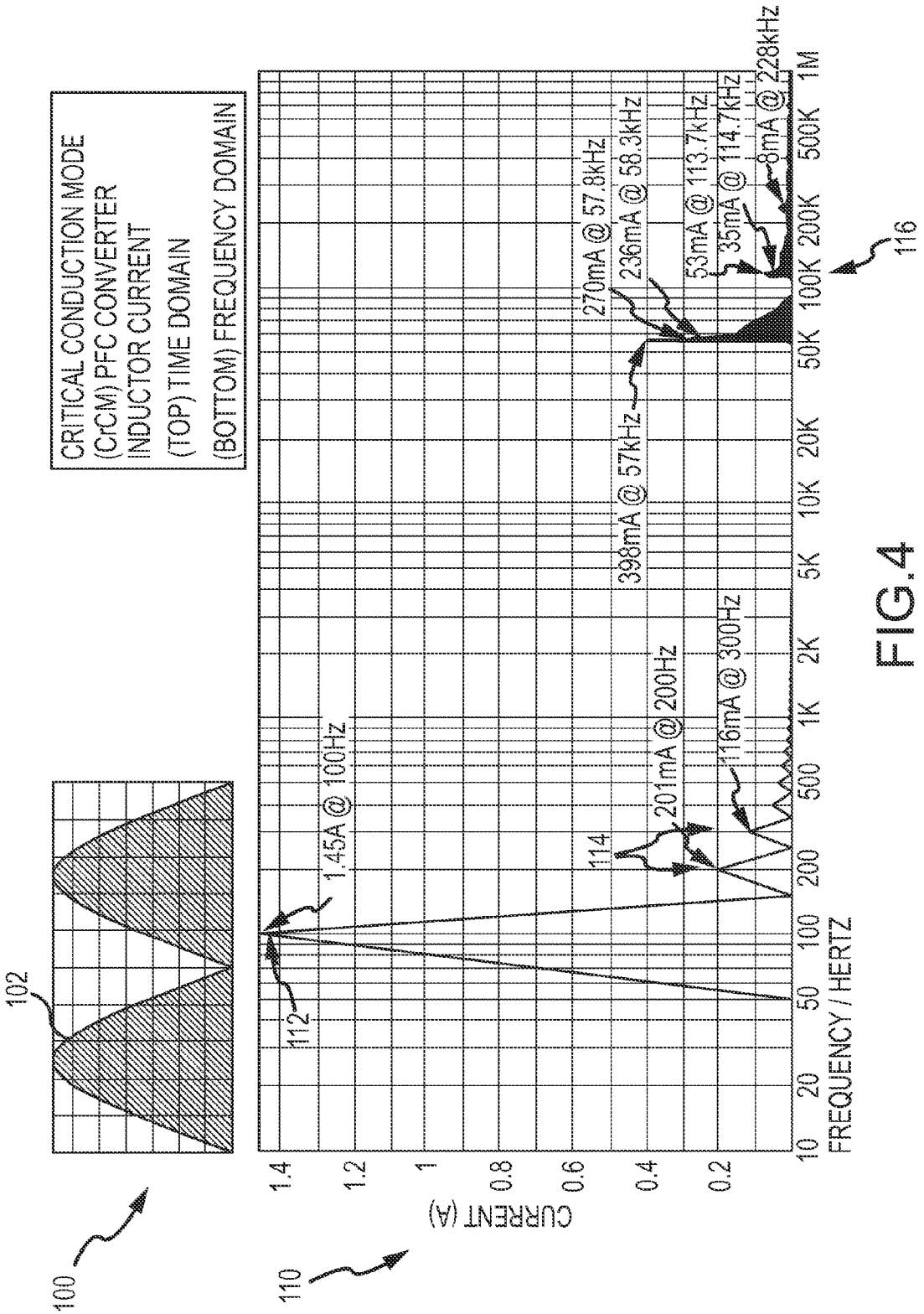
CRITICAL CONDUCTION MODE
(CrCM) PFC CONVERTER
INDUCTOR CURRENT
(TOP) TIME DOMAIN
(BOTTOM) FREQUENCY DOMAIN
100
102
110
112
114
116
1.45A @ 100Hz
201mA @ 200Hz
116mA @ 300Hz
398mA @ 57kHz
270mA @ 57.8kHz
236mA @ 58.3kHz
53mA @ 113.7kHz
35mA @ 114.7kHz
8mA @ 228kHz
CURRENT (A)
1.4
1.2
1
0.8
0.6
0.4
0.2
FREQUENCY / HERTZ
10
20
50
100
200
500
1K
2K
5K
10K
20K
50K
100K
200K
500K
1M

FIG.4

OPTIMIZED LITZ WIRE FOR
CCM OR CrCM PFC APPLICATIONS

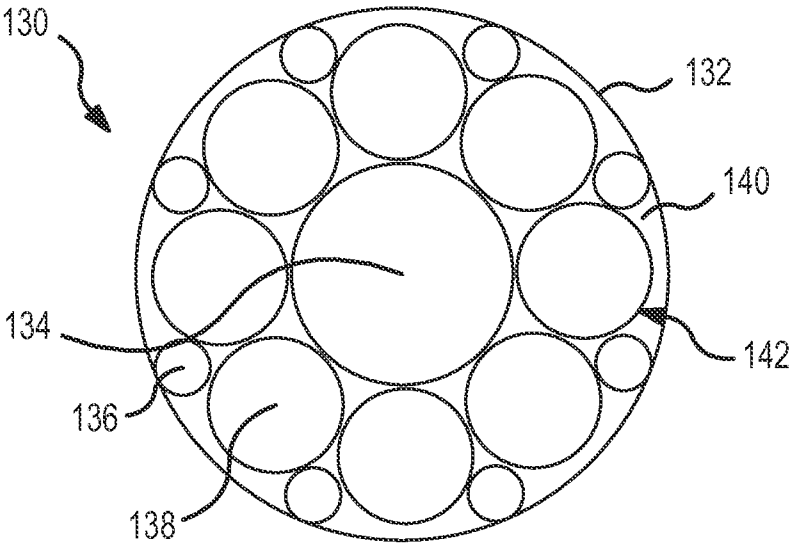

FIG.5

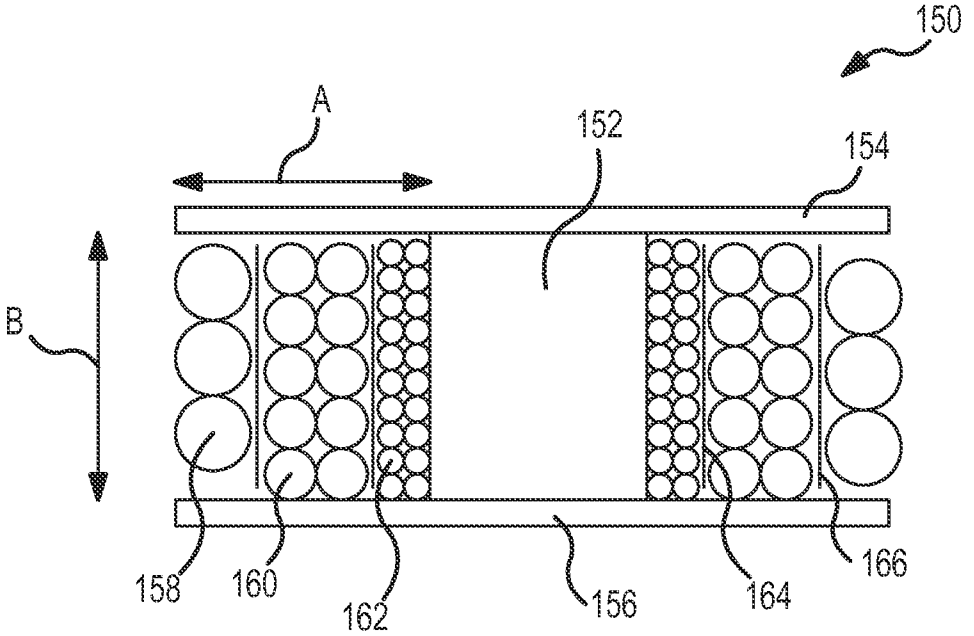

FIG.6

OPTIMIZED LITZ WIRE

CROSS-REFERENCE TO RELATED APPLICATION

This application claims priority under 35 U.S.C. 119 to U.S. Provisional Application No. 61/056,706, entitled: "TECHNIQUES FOR POWER CONVERSION," filed on May 28, 2008, the contents of which are incorporated herein as if set forth in full.

BACKGROUND

Many electronic components such as power converters utilize wires or cables to carry voltage and/or current from one point in a circuit to another. Generally, these wires may be constructed from a conductive material (e.g., copper), which has a resistance to current flow that may contribute to power loss (sometimes called "copper loss") in an electronic component. Therefore, it may be desirable to minimize the power loss in the conductors in order to provide more efficient components.

Generally, the resistance of a conductor at DC (0 Hertz) depends on its cross sectional area. A conductor with a larger cross sectional area has a lower resistance than a conductor with a smaller cross sectional area. For AC current, a phenomenon known as the "skin effect" causes that resistance to increase substantially with increasing frequency of current.

The skin effect is the tendency of an AC electric current to distribute itself within a conductor such that the current density (i.e., current per cross-sectional area) near the surface of the conductor is greater than at its core. In other words, the current tends to flow at the "skin" of the conductor. The skin effect is due to eddy currents formed by the AC current. The decline in current density verses depth from the surface is often quantified by a measure of the distance from the surface of the conductor over which the current density decays to 1/e (or about 37%) of its value at the surface. This measure is generally referred to as "skin depth."

For low frequencies, the skin effect may be negligible. For AC current at frequencies high enough that the skin depth is small compared to the conductor diameter, the skin effect causes most of the conduction to happen at the conductor's surface. At high enough frequencies, the interior of a large conductor does not carry much current. As an example, at 60 Hz, the skin depth of a copper wire is about 0.3 inches (8 mm). At 60 kHz, the skin depth of copper is about 0.01 inches (0.254 mm). At 6 MHz, the skin depth is about 0.001 inches (25.4 μm). As can be appreciated, conductors larger than a few skin depths do not conduct much current near their interior axis, so that material isn't used effectively.

A type of cable called bunched wire or litz wire (from the German litzendraht, braided wire) may be used to mitigate the skin effect for current with relatively high frequencies, such as a few kilohertz, a few megahertz, or more. A cross-sectional view of a litz wire **10** is shown in FIG. **1**. The litz wire **10** includes a number of insulated wire strands **15** woven together in a pattern (e.g., twisted, braided, or the like), so that the overall magnetic field acts substantially equally on all the strands and causes the total current to be distributed equally among them. Further, the radius of the individual strands may be chosen to be less than a skin-depth for a particular application, so the individual strands do not suffer an appreciable skin effect loss. The individual strands generally include an outer layer of insulation **16** to electrically insulate them from

each other, such that the strands in a bundle are not shorted together. Further, the entire bundle of strands **15** may include an outer insulation layer **25**.

Litz wire may be used in the windings of high-frequency transformers, to increase their efficiency by mitigating both skin effect and another phenomenon referred to as proximity effect, which is caused by an interaction of magnetic fields between multiple conductors. The weaving or twisting pattern of litz wire may be selected so that individual wires will reside for short intervals on the outside of cable and for short intervals on the inside of the cable, which may allow the interior of the litz wire to contribute to the cable's conductivity.

Undesirably, standard litz wire may reduce the effective copper area (relative to a solid conductive wire) since the insulation on each of the smaller individual wire strands consumes a significant amount of the net cross-sectional area of the litz wire. Furthermore, the packing of equally sized round strands next to each other leaves a relatively large percentage of the cross-sectional area taken by air space. Standard litz wire therefore results in relatively small amounts of copper in the cross-sectional area of the wire compared with standard wire of the same cross-sectional area.

SUMMARY

The following embodiments and aspects of thereof are described and illustrated in conjunction with systems, tools, and methods which are meant to be exemplary and illustrative, and not limiting in scope. In various embodiments, one or more of the above-described problems have been reduced or eliminated, while other embodiments are directed to other improvements.

According to a first aspect, a conductive cable that is operative conduct current having a plurality of frequency components is provided. The conductive cable includes a plurality of strands each including an inner conductor and an outer insulating layer, wherein at least one of the plurality of strands has a cross-sectional area that is different than a cross-sectional area of another of the plurality of strands.

According to a second aspect, a method for providing a conductive cable is disclosed. The method includes providing a first set of one or more strands that include an inner conductor and an outer insulating layer, the inner conductor having a first cross-sectional area, and providing a second set of one or more strands that include an inner conductor and an outer insulating layer, the inner conductor having a second cross-sectional area different than the first cross-sectional area. The method further includes coupling the ends of the first set of strands and the second set of strands together to form a conductive cable. In addition, the first and second cross-sectional areas are sized to efficiently conduct current having multiple frequency components.

According to a third aspect, a magnetic component is provided. The magnetic component includes a core, and a conductive cable wrapped around at least a portion of the core. The conductive cable includes a plurality of strands each including an inner conductor and an outer insulating layer, wherein at least one of the plurality of strands has a cross-sectional area that is different than a cross-sectional area of another of the plurality of strands.

In addition to the exemplary aspects and embodiments described above, further aspects and embodiments will become apparent by reference to the drawings and by study of the following descriptions.

BRIEF DESCRIPTION OF THE DRAWINGS

FIG. **1** illustrates a cross-sectional view of a prior art litz wire.

FIG. **2** illustrates an example of a PFC boost converter circuit that include an inductor that may include an optimized litz wire.

FIG. **3** illustrates time and frequency domain representations of the current through the inductor L**1** shown in FIG. **2** when the PFC boost converter is operated in a Continuous Conduction Mode (CCM).

FIG. **4** illustrates time and frequency domain representations of the current through the inductor L**1** shown in FIG. **2** when the PFC boost converter is operated in a Critical Conduction Mode (CrCM).

FIG. **5** illustrates a cross-sectional view of an exemplary optimized litz wire.

FIG. **6** illustrates a cross-sectional view of a bobbin that is wound with multiple strands of wires having different gauges.

DETAILED DESCRIPTION

While the invention is susceptible to various modifications and alternative forms, specific embodiments thereof have been shown by way of example in the drawings and are herein described in detail. It should be understood, however, that it is not intended to limit the invention to the particular form disclosed, but rather, the invention is to cover all modifications, equivalents, and alternatives falling within the scope and spirit of the invention as defined by the claims.

In the following discussion, systems and methods for providing an optimized litz wire are explored. First, with reference to FIG. **4**, a PFC boost converter in which the features described herein may be used is described. It will be appreciated that a discussion of this particular application is provided for explanatory purposes, and that the systems and methods for providing optimized litz wires may be applicable in other application. Next, with reference to FIGS. **5**-**6**, exemplary embodiments of optimized litz wires are described.

Electronic devices such as notebook computers, desktop computers, monitors, and the like typically receive power from an AC power source. However, in most instances, the devices require DC power to operate, so the power from the AC power source must converted to DC power. The simplest way to accomplish this is by diode rectification circuitry. In this type of circuit, diodes are positioned in a circuit so that AC current flows in only one direction, so that the output of the rectifier maintains a non-negative voltage. This method is typically the least expensive AC-DC conversion scheme, but it also creates the most noise or "pollution" on the AC power network. This is the case because when a power converter is coupled to loads that are not purely resistive (e.g., reactive loads that include capacitors and inductors), the current drawn from the AC power source may be out of phase with the AC voltage, which may lead to increased harmonics. Therefore, if used in large numbers, devices that use this method can greatly impact the quality of the AC power line. Additionally, reactive loads cause power converters to be less efficient. Energy stored in the reactive loads results in a time difference between the current and voltage waveforms. This stored energy returns to the power source and is not available to do work at the load, so the "real power" of the circuit is less than the "apparent power." The ratio of real power to apparent power is generally referred to as the power factor of a circuit. As can be appreciated, a circuit with a low power factor will be required to draw greater current to transfer a given quantity of real power than a circuit with a high power factor, which translates to increased losses in power distribution systems and increased energy costs. Hence, it is often desirable to provide AC-to-DC power conversion that does not have these same shortcomings.

To achieve this, a power converter that includes power factor correction (PFC) circuitry may be used. Generally, PFC circuits have the function of maintaining the AC current substantially in phase with the AC voltage, so that the power converter resembles a purely resistive load to the AC power source, which reduces the pollution on the AC power line and increases the efficiency of the power converter. One type of PFC circuit is generally referred to as a passive PFC circuit. Passive PFC circuits perform power factor correction with only passive components, such as inductors and capacitors. Passive PFC circuits are typically robust and effective, but it is often difficult to reduce the distortion to acceptable levels. Furthermore, since passive PFC circuits operate at the relatively low line frequency (e.g., A typical AC power source operates at 50 Hz or 60 Hz), the inductors and capacitors required may be large in size and costly.

Another type of PFC circuit is generally referred to as an active PFC circuit. Active PFC circuits generally have at least one switch. The most commonly used active PFC circuit is based on a boost converter, which is included in a PFC circuit **50** shown in FIG. **2**. The PFC circuit **50** operates to shape the input current to achieve low distortion levels. Due to the use of relatively higher switching frequencies (e.g., 50 kHz to 300 kHz), the size of the associated passive components required is significantly reduced when compared to passive PFC circuits.

The structure of the active PFC circuit **50** is now described with reference to FIG. **2**. As can be seen, an AC power source **52** is coupled across the input terminals **64**, **66** of a full-wave bridge rectifier D**3**. A first output terminal of the bridge rectifier D**3** is coupled to a first terminal of an inductor L**1** via a node **58**. A second terminal of the inductor L is coupled to a drain of a transistor switch Q**1** and to the anode of a diode D**1**. The cathode of the diode D**1** is coupled to a first terminal of a bulk capacitor C**3**, which forms a PFC output node **56** that may further be coupled to a load (e.g., a DC-DC converter). As shown, a second output terminal of the bridge rectifier D**3**, the source of the transistor switch Q**1**, and the second terminal of the capacitor C**3** may be coupled to ground. Furthermore, a PFC control circuit **54** may be coupled to the gate of the transistor switch Q**1** through a node **60** to control whether the transistor switch Q**1** is conductive (i.e., the switch is closed) or non-conductive (i.e., the switch is open). Additionally, the PFC control circuit **54** may be operable to sense various voltage and currents in the power converter. For example, the PFC control circuit **54** may be connected to a voltage divider circuit (i.e., resistors R**1** and R**2**) through a node **62**.

In operation, a current flows from the bridge rectifier D**3** through the inductor L**1** and through the switch Q**1** when it is closed. Under such conditions, the diode D**1** is reverse-biased by the voltage on the capacitor C**3** (i.e., the PFC output node **56**). The current flowing through the inductor L**1** stores energy in the form of an electromagnetic field. When the switch Q**1** is opened, the stored energy is transferred to the bulk capacitor C**3** by a current that flows through the diode D**1**, which is forward-biased under such conditions. The energy in the bulk capacitor C**3** maintains the voltage at the PFC output node **56** and is available for driving a load (e.g., another power supply stage). As can be appreciated, the rate of energy transfer from the AC power source **52** to the capacitor C**3** is dependent upon a duty cycle of the transistor switch Q**1**. Therefore, using feedback voltage and current signals, the PFC control circuit **54** may control the times at which

switching of the transistor switch Q1 occurs so that the AC current and the AC voltage are substantially in phase, and so that the PFC output node **56** voltage is substantially maintained at a constant DC level. As an example, the switching frequency of the transistor switch Q1 may be in the range of 10 kHz, 50 kHz, 250 kHz, and the like.

The PFC converter inductor L1 may carry large components of 2nd harmonic source frequency harmonics (e.g. 100 Hz or 120 Hz for 50 Hz and 60 Hz AC power sources, respectively), but may also carry significant components of relatively higher switching harmonics (e.g. 20 kHz-400 kHz, or higher). FIGS. **3** and **4** show typical PFC boost inductor current (time domain and frequency domain) for continuous-conduction-mode (FIG. **3**) and critical-conduction-mode (FIG. **4**) PFC converters. FIG. **3** illustrates a time domain graph **80** and a frequency domain graph **85** of the current flowing through the inductor L1 (e.g., inductor current **82** shown in the time domain graph **80**). As referenced by the numerals **88** and **90**, the majority of current passing through the PFC inductor L1 is low frequency such as 100 Hz and 200 Hz (or 120 Hz and 240 Hz for a 60 Hz AC power source). However, there is also a reasonably high percentage of switching-frequency currents (e.g., 50 kHz-500 kHz) in the PFC boost inductor L1, as highlighted by the reference numeral **92**.

Similarly, FIG. **4** illustrates a time domain graph **100** and a frequency domain graph **110** of the current flowing through the inductor L1 (e.g., inductor current **102** shown in the time domain graph **100**). As referenced by the numerals **112** and **114**, the majority of current passing through the PFC inductor L1 is low frequency such as 100 Hz and 200 Hz (or 120 Hz and 240 Hz for a 60 Hz AC power source). However, there are also a reasonably high percentage of switching-frequency currents (e.g., 50 kHz-500 kHz) in the PFC boost inductor L1, as highlighted by the reference numeral **116**.

FIG. **5** illustrates a cross-sectional area an optimized litz (or bunched) wire **130** that may be used for a winding of a PFC inductor (such as the inductor L1) or any other application that may carry multiple harmonics. The wire **130** may include a relatively large conductive strand **134** disposed in the center, and a plurality of strands **136** and **138** disposed around the larger strand **134**. Each of the strands **134**, **136**, and **138** may include an inner conductor made from any suitable conductive material (e.g., copper, silver, or the like). Further, each individual strand may be insulated from each other by an outer insulating layer (e.g., the outer insulating layer **142**), which may be constructed from any suitable material, such as nylon, fiberglass, ceramic, plastics, or the like. Further, the entire wire **130** may include an outer insulation layer **132**. It will be appreciated that since the various strands (e.g., strands **134**, **136**, and **136**) have a circular cross-sectional area, the overall cross-sectional area of the litz wire **130** may include a plurality of "gaps" **140**.

By utilizing multiple strands of wire having different cross sectional areas (or gauges), each gauge of wire may be designed and selected to carry current for one or more specific harmonics of the PFC inductor current. In this regard, the different gauges of wire may result in significantly fewer individual strands of litz wire, and thus, less insulation in comparison to the overall cross-sectional area of the wire **130**. This feature may also increase the percentage of the cross-sectional area in the wire **130** that includes a conductor. Furthermore, the different wire gauges utilize the cross-sectional area better than equal wire gauges by reducing the amount of air space (e.g., gaps **140**) in the cross-section of the wire **130**.

In the exemplary embodiment shown in FIG. **5**, the large conductive wire strand **134** in the center may carry the second-harmonic AC source frequency current (typically 100 Hz or 120 Hz for 50 Hz and 60 Hz AC sources, respectively), the mid-sized strands **138** that are closer to the outside of the wire **130** may carry the upper frequency harmonics of the AC source current (e.g. 4th harmonic, 6th harmonic, and the like), and the smallest strands **136** at the outer edge of the litz wire **130** may carry the switching frequency current (e.g., approximately 50 kHz-500 kHz). Additionally, by using different gauges of wire, more of the cross-sectional area of the wire **130** may be utilized by conductors, which permits the wire **130** to carry more current than a similarly sized litz wire using wires having a single gauge. As an example, conductors may make up over 80%, over 90%, or more of the overall cross-sectional area of the litz wire **130**. It will be appreciated that the gauge selected for the various strands of the wire **130** may be chosen dependent upon the frequency and magnitude of the current intended for the application. In one embodiment, the center strand **134** may make up at least 50 percent of the total cross-sectional area of the conductors in the wire **130**. Further, it will be appreciated that other numbers of different gauge wire may be used (e.g., two different gauges of wire, four different gauges of wire, and the like).

In addition, the multiple strands of different gauge wire may be arranged in any suitable pattern. For example, the strands **134**, **136**, and **138** may be twisted together in various ways (e.g., twelve twists per foot). Further, other patterns, such as a braid, may be utilized.

FIG. **6** illustrates a cross-sectional view of a bobbin **150** that includes a spindle portion **152** and rim portions **154** and **156**. The bobbin **150** may be used in conjunction with a core (e.g., an EE-core) to form a magnetic component, such as an inductor or a transformer. In this embodiment, three strands **158**, **160**, and **162** of wire having multiple cross-sectional areas (different gauges) are wound around the spindle of the bobbin **150**. The ends of each strand **158**, **160**, and **162** are coupled together, such that the strands are connected to each other in parallel. In this regard, the smaller diameter wire **162** may be used to carry the higher frequency harmonics (e.g., the switching frequency current), while the larger diameter wires **160** and **158** may be used to carry the middle and lower frequency harmonics (e.g., the AC source frequency harmonics), respectively. Optionally, layers of insulation **164**, **166** may be disposed between the strands **158**, **160**, and **162** to provide further electrical isolation.

In the example shown in FIG. **6**, the spindle **152** and the rims **154**, **156** of the bobbin **150** form a "window" (the area referenced by the arrows A and B) for the windings to be wrapped. It should be appreciated that the by utilizing multiple strands having different gauges, the portion of the window used to carry current at the various frequencies may be improved over previous designs that used multiple strands having the same gauge. Further, in general, the features described herein may reduce the losses in the windings of a magnetic component by reducing the portion of conductors that have a very low current density (due to the skin effect), by reducing the gaps between strands by providing strands of different gauges, and by reducing the percentage of total cross-sectional area that is occupied by the insulation layers of the individual strands. It will be appreciated that the features described herein may have other advantages as well.

While the invention has been illustrated and described in detail in the drawings and foregoing description, such illustration and description is to be considered as exemplary and not restrictive in character. For example, certain embodiments described hereinabove may be combinable with other

described embodiments and/or arranged in other ways (e.g., process elements may be performed in other sequences). Accordingly, it should be understood that only the preferred embodiment and variants thereof have been shown and described and that all changes and modifications that come within the spirit of the invention are desired to be protected.

What is claimed:

1. A power factor correction circuit for receiving an AC source current from an AC power source, wherein the AC source current has a plurality of electrical frequency harmonics including a second-harmonic, the power factor correction circuit comprising:

a switch Q**1**;

a rectifier that receives and rectifies the AC source current from the AC power source;

a controller electrically coupled with the switch Q**1** for controlling the switch Q**1**; and

an inductive element electrically coupled with the switch Q**1** and comprising a plurality of strands, each strand of the plurality of strands including an inner conductor and an outer insulating layer, wherein the cross-sectional area of each of the strands is based on the electrical frequency harmonics and at least one of the plurality of strands has a cross-sectional area that is different than a cross-sectional area of another of the plurality of strands, and further wherein one or more first strands of the plurality of strands each have a cross-sectional area based on the second-harmonic of the AC source current of the power factor correction circuit, wherein the one or more first strands are exactly one strand that has a cross-sectional area that is larger than the other of the plurality of strands, which all have the same cross-sectional area as each other, wherein the cross-sectional area of each of the other of the plurality of strands is based on one of a switching frequency of the switch Q**1** or a third or greater harmonic of the electrical frequency harmonics of the AC source current.

2. The power factor correction circuit of claim **1**, wherein the one strand is located near the center of the inductive element, and wherein the other of the plurality of strands are located away from the center of the inductive element.

3. The power factor correction circuit of claim **1**, wherein the one strand has a cross-sectional area that is at least 50 percent of the total cross-sectional area of the inductive element.

4. The power factor correction circuit of claim **1**, wherein the area of the other of the plurality of strands are chosen to fit an integral number of wires strands around the one strand.

5. The power factor correction circuit of claim **1**, wherein the sum of the cross-sectional areas of the inner conductors is greater than 85 percent of the total cross-sectional area of the inductive element.

6. The power factor correction circuit of claim **1**, wherein the plurality of strands include one or more second strands and one or more third strands, wherein the first, second and third strands have different cross-sectional areas, and further wherein the cross-sectional area of each of the second strands is based on a third or greater harmonic of the electrical frequency harmonics of the AC source current, and the cross-sectional area of each of the third strands is based on a switching frequency of the switch Q**1**.

7. The power factor correction circuit of claim **6**, wherein the conductive cable includes an equal number of strands having a first cross-sectional area and a second cross-sectional area, wherein the first and second cross-sectional areas are different.

8. A method for providing a power factor correction circuit for receiving an AC source current from an AC power source, wherein the AC source current has a plurality of electrical frequency harmonics including a second-harmonic, the method comprising:

providing a switch Q**1**;

receiving and rectifying the AC source current from the AC power source with a rectifier;

controlling the switch Q**1** with a controller electrically coupled with the switch Q**1**;

providing an inductive element electrically coupled with the switch Q**1**, wherein the providing of the inductive element comprises:

providing a first set of one or more strands each comprising an inner conductor and an outer insulating layer, the inner conductor having a first cross-sectional area;

providing a second set of one or more strands each comprising an inner conductor and an outer insulating layer, the inner conductor having a second cross-sectional area different than the first cross-sectional area, wherein the first and second cross-sectional areas are based on the electrical frequency harmonics of the AC source current, and further wherein the first cross-sectional area is based on the second-harmonic of the AC source current of the power factor correction circuit; and

coupling the ends of the first set of one or more strands and the second set of one or more strands together to form the inductive element; and

flowing the AC source current from the AC power source through the rectifier and through the strands of the inductive element, wherein the first set of one or more strands is exactly one strand, and wherein the first cross-sectional area is larger than the second cross-sectional areas of the second set of strands, which all have the same cross-sectional area as each other, wherein the cross-sectional area of each of the other of the plurality of strands is based on one of a switching frequency of the switch Q**1** or a third or greater harmonic of the electrical frequency harmonics of the AC source current.

9. The method of claim **8**, wherein the one strand is located near the center of the inductive element, and wherein the strands of the second set of one or more strands are located away from the center of the inductive element.

10. The method of claim **8**, wherein the one strand has a cross-sectional area that is at least 50 percent of the total cross-sectional area of the inductive element.

11. The method of claim **8**, further comprising:

wrapping the inductive element around at least a portion or a core to form a magnetic component.

12. The method of claim **8**, wherein the sum of the cross-sectional areas of all of the inner conductors is greater than 85 percent of the total cross-sectional area of the inductive element.

13. The method of claim **8**, further comprising:

providing a third set of one or more strands each comprising an inner conductor and an outer insulating layer, the inner conductor having a third cross-sectional area different than the first and second cross-sectional areas; and

coupling the ends of the first set of one or more strands, the second set of one or more strands, and the third set of one or more strands together to form the inductive element,

wherein the second cross-sectional area is based on a third or greater harmonic of the electrical frequency harmonics of the AC source current, and the third cross-sectional area is based on a switching frequency of the switch Q**1**.

14. The method of claim **13**, wherein the first set of one or more strands has an equal number of strands as at least one of the second and third set of strands.

15. A power factor correction circuit for receiving an AC source current from an AC power source, wherein the AC source current has a plurality of electrical frequency harmonics, the power factor correction circuit comprising:

a switch Q**1**;

a rectifier that receives and rectifies the AC source current from the AC power source;

a controller electrically coupled with the switch Q**1** for controlling the switch Q**1**; and

an inductive element electrically coupled with the switch Q**1** and comprising:

a core; and

a conductive cable carrying current having a plurality of electrical frequency harmonics and wrapped around at least a portion of the core, the conductive cable comprising a plurality of strands each of the plurality of strands including an inner conductor and an outer insulating layer, wherein the strands have cross-sectional areas matched to the electrical frequency harmonics and at least one of the plurality of strands has a cross-sectional area that is different than a cross-sectional area of another of the plurality of strands;

wherein the plurality of strands include one or more first strands, one or more second strands and one or more third strands, wherein the first, second and third strands have different cross-sectional areas, and further wherein the cross-sectional area of the first strands is based on a second-harmonic of the AC source current, the cross-sectional area of the second strands is based on a third or greater harmonic of the AC source current, and the cross-sectional area of the third strands is based on a switching frequency of the switch Q**1**.

16. The power factor correction circuit of claim **15**, wherein the inductive element is a transformer or an inductor.

* * * * *