US008390249B2

(12) **United States Patent**
Walley et al.

(10) **Patent No.: US 8,390,249 B2**
(45) **Date of Patent: Mar. 5, 2013**

(54) **BATTERY WITH INTEGRATED WIRELESS POWER RECEIVER AND/OR RFID**

(75) Inventors: **John Walley**, Ladera Ranch, CA (US); **Jeyhan Karaoguz**, Irvine, CA (US); **Ahmadreza (Reza) Rofougaran**, Newport Coast, CA (US); **Nambirajan Seshadri**, Irvine, CA (US); **Reinier Van Der Lee**, Lake Forest, CA (US)

(73) Assignee: **Broadcom Corporation**, Irvine, CA (US)

(*) Notice: Subject to any disclaimer, the term of this patent is extended or adjusted under 35 U.S.C. 154(b) by 400 days.

(21) Appl. No.: **12/793,458**

(22) Filed: **Jun. 3, 2010**

(65) **Prior Publication Data**

US 2011/0127954 A1 Jun. 2, 2011

Related U.S. Application Data

(60) Provisional application No. 61/264,925, filed on Nov. 30, 2009.

(51) **Int. Cl.**
H02J 7/00 (2006.01)
G05B 11/01 (2006.01)
G08C 19/12 (2006.01)

(52) **U.S. Cl.** **320/108**; 340/12.51; 340/13.26; 320/106

(58) **Field of Classification Search** 320/108
See application file for complete search history.

(56) **References Cited**

U.S. PATENT DOCUMENTS

2002/0000788	A1 *	1/2002	Ostergaard et al.	320/128
2005/0095498	A1	5/2005	Silverman	
2006/0038572	A1	2/2006	Philbrook	
2006/0139168	A1 *	6/2006	Pratt et al.	340/539.22
2006/0145660	A1 *	7/2006	Black et al.	320/108
2006/0178170	A1 *	8/2006	Chung et al.	455/572
2009/0096413	A1 *	4/2009	Partovi et al.	320/108
2009/0187495	A1	7/2009	Bertness	
2009/0212781	A1	8/2009	Bertness	

FOREIGN PATENT DOCUMENTS

WO	04061887	A1	7/2004
WO	08118477	A1	10/2008

OTHER PUBLICATIONS

"WiTricity: Wireless Electricity", Oct. 2009, 29 pp.
Andre Kurs, et al., "Wireless Power Transfer via Strongly Coupled Magnetic Resonances", Science, Jul. 6, 2007, pp. 83-86, vol. 317.
Partial European Search Report; EP Application No. EP 10 01 4990; Apr. 13, 2011; 5 pages.

* cited by examiner

Primary Examiner — M'Baye Diao
(74) *Attorney, Agent, or Firm* — Garlick & Markison; Edward J. Marshall

(57) **ABSTRACT**

A battery includes one or more rechargeable cells, a wireless power coil, a battery charger circuit, and may further include an RFID module. The wireless power coil is operable to generate an AC voltage from a wireless power electromagnetic field. The battery charger circuit is operable to generate a battery charge voltage from the AC voltage in accordance with a battery charge control signal and, when enabled, to charge the one or more rechargeable cells via the battery charge voltage. If the battery further includes the RFID module, it is operable to generate the battery charge control signal and communicate with a wireless power transmitter device.

20 Claims, 25 Drawing Sheets

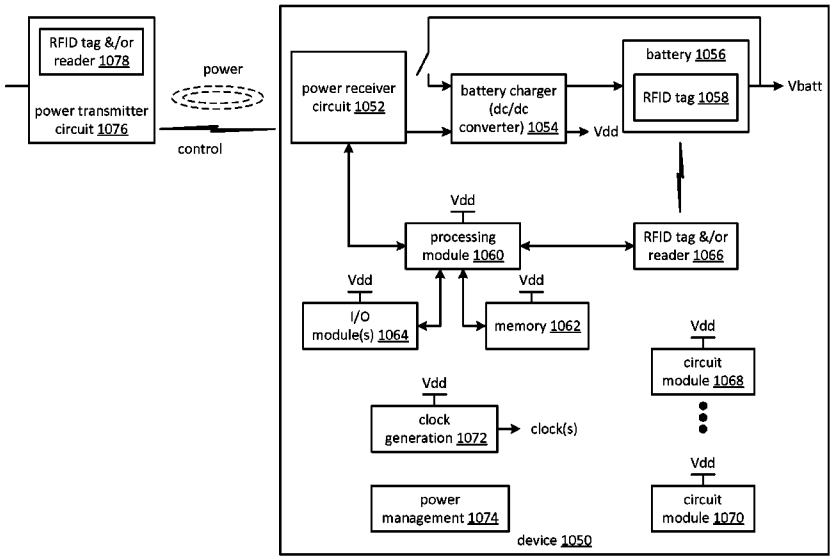

SAMSUNG EXHIBIT 1049

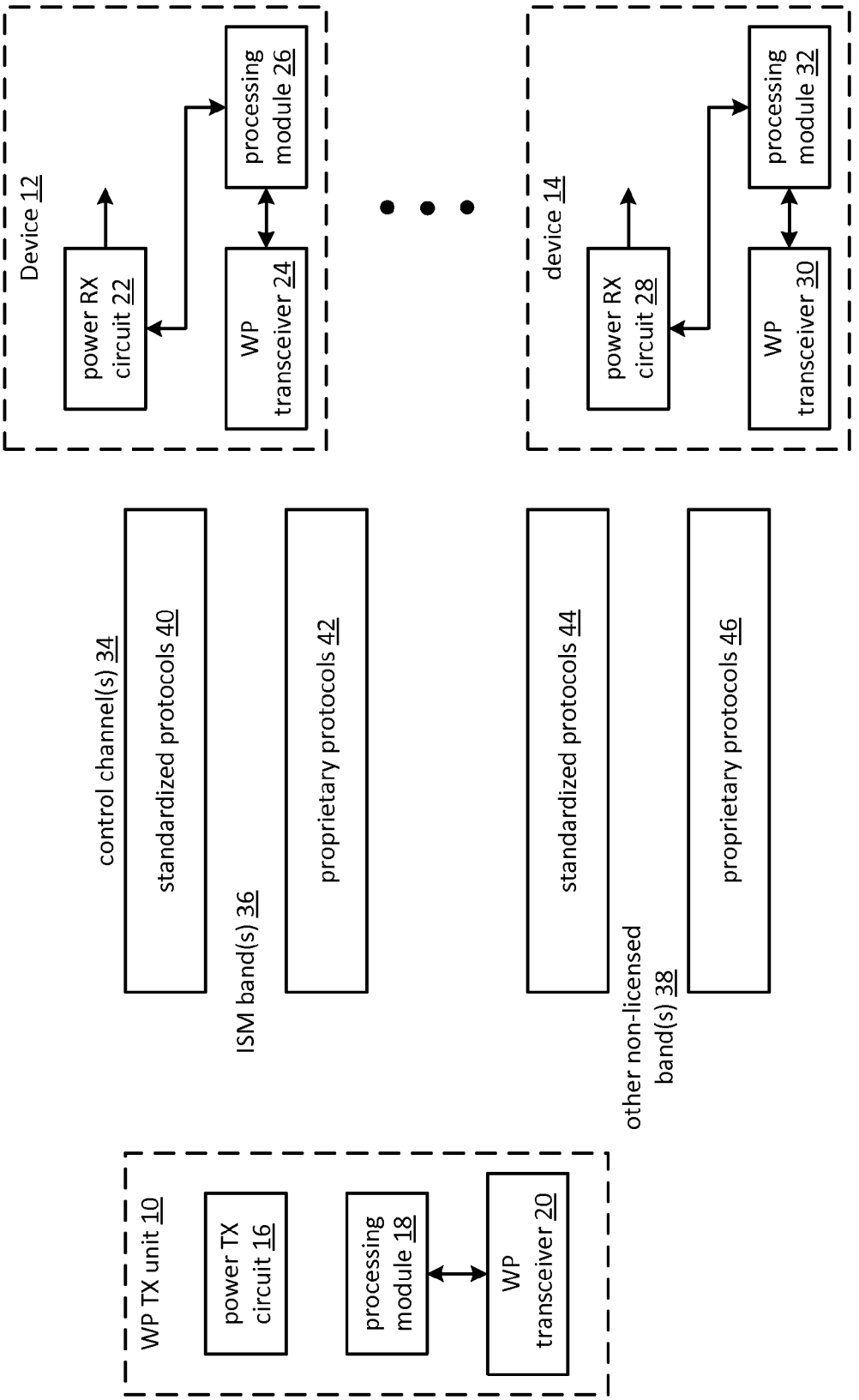
Device 12
power RX circuit 22
processing module 26
WP transceiver 24
device 14
power RX circuit 28
processing module 32
WP transceiver 30
control channel(s) 34
standardized protocols 40
ISM band(s) 36
proprietary protocols 42
standardized protocols 44
other non-licensed band(s) 38
proprietary protocols 46
WP TX unit 10
power TX circuit 16
processing module 18
WP transceiver 20

FIG. 1

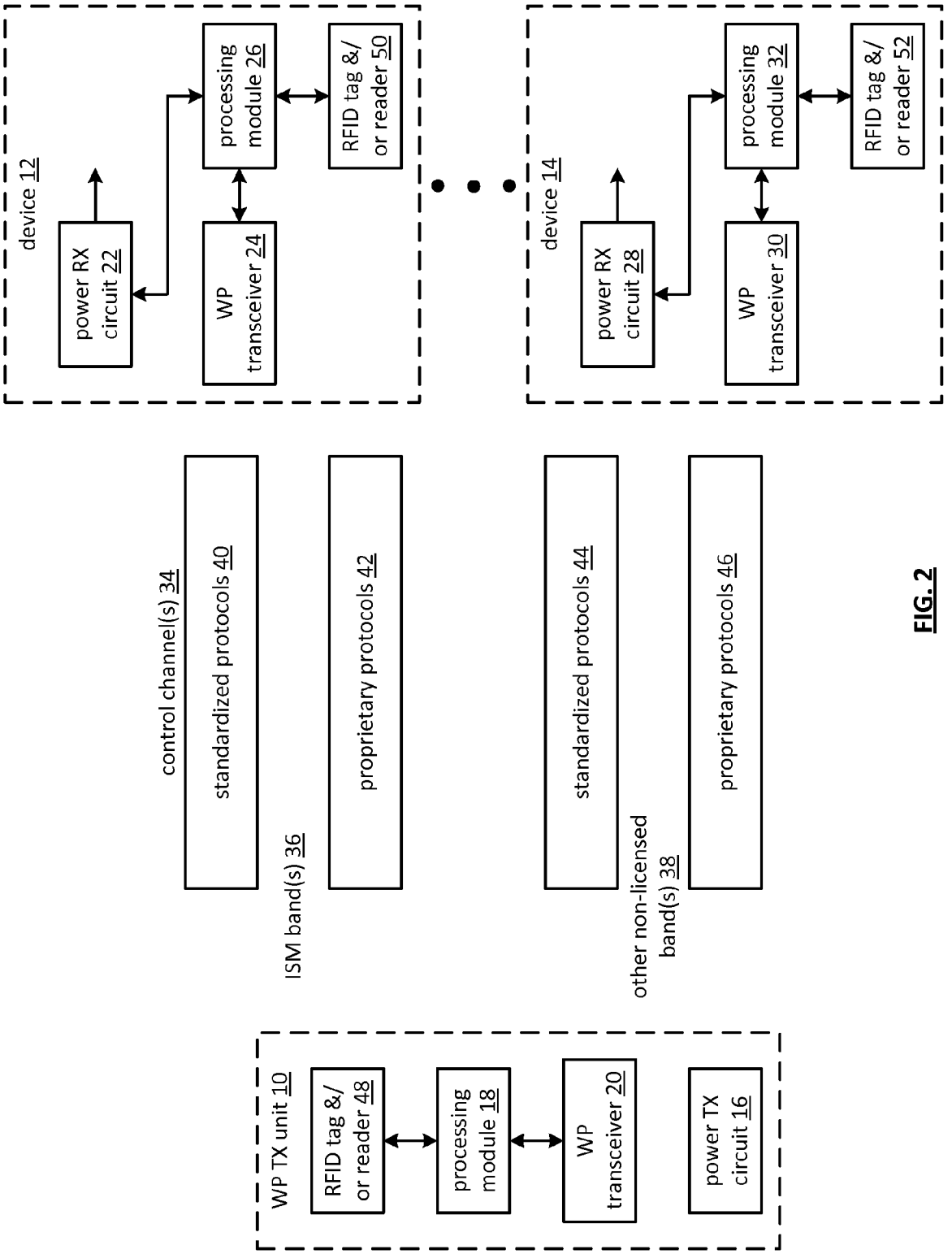
device 12
power RX circuit 22
processing module 26
RFID tag &/ or reader 50
WP transceiver 24
device 14
power RX circuit 28
processing module 32
RFID tag &/ or reader 52
WP transceiver 30
control channel(s) 34
standardized protocols 40
proprietary protocols 42
ISM band(s) 36
standardized protocols 44
proprietary protocols 46
other non-licensed band(s) 38
WP TX unit 10
RFID tag &/ or reader 48
processing module 18
WP transceiver 20
power TX circuit 16

FIG. 2

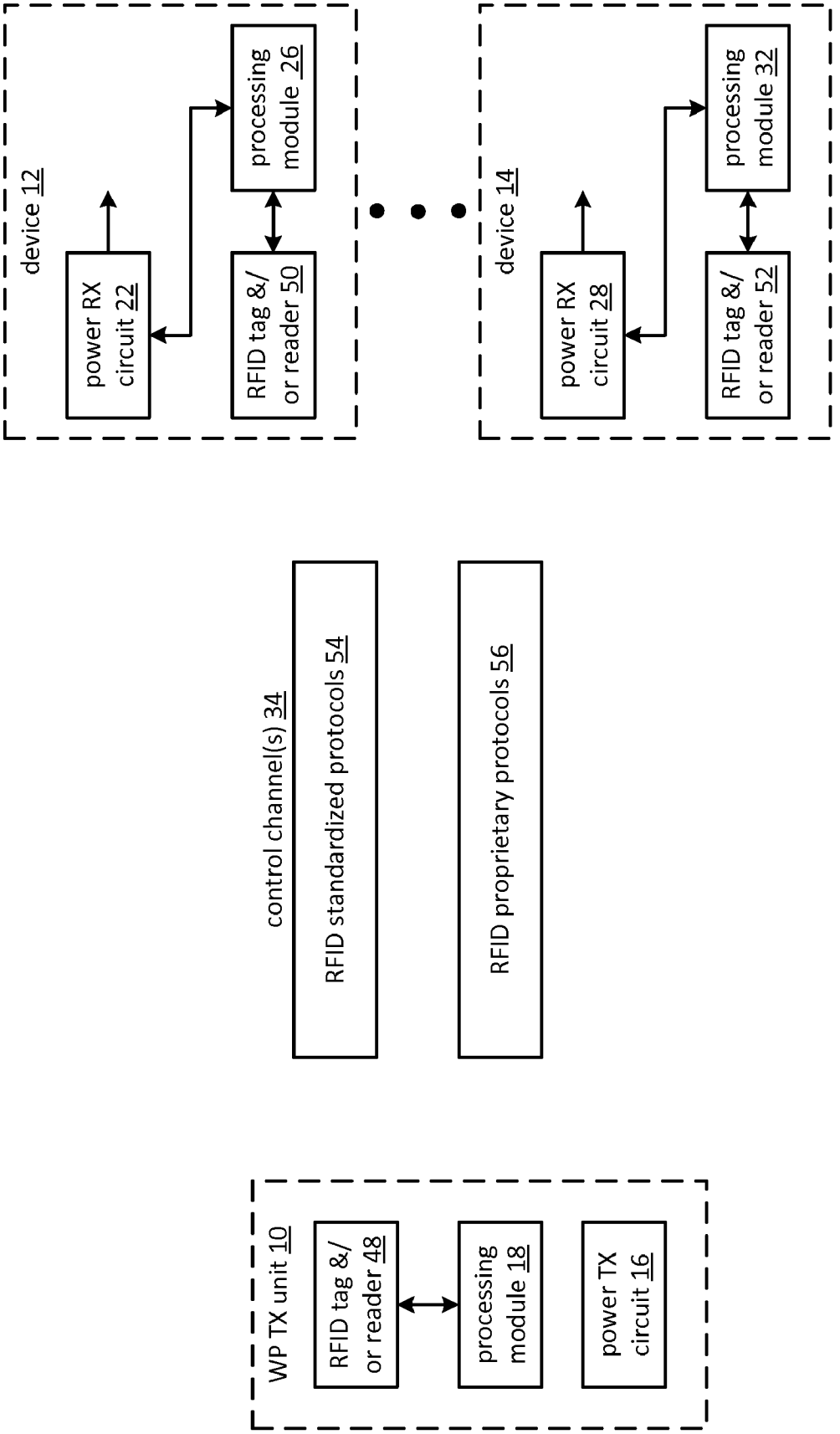
device 12
power RX circuit 22
processing module 26
RFID tag &/ or reader 50
device 14
power RX circuit 28
processing module 32
RFID tag &/ or reader 52
control channel(s) 34
RFID standardized protocols 54
RFID proprietary protocols 56
WP TX unit 10
RFID tag &/ or reader 48
processing module 18
power TX circuit 16

FIG. 3

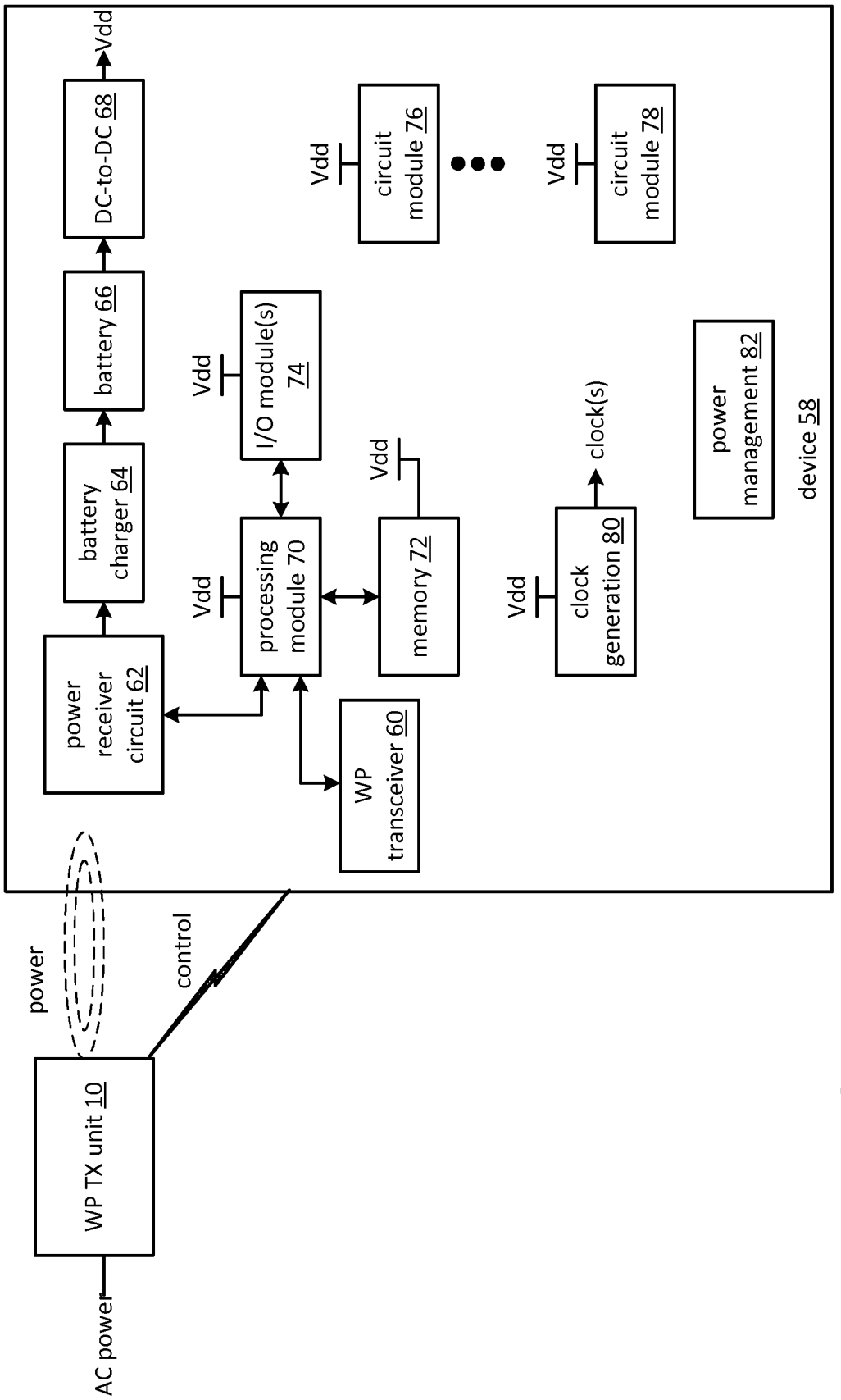
AC power
WP TX unit 10
power
control
power receiver circuit 62
battery charger 64
battery 66
DC-to-DC 68
Vdd
Vdd
processing module 70
Vdd
I/O module(s) 74
Vdd
memory 72
WP transceiver 60
Vdd
circuit module 76
Vdd
circuit module 78
Vdd
clock generation 80
clock(s)
power management 82
device 58

FIG. 4

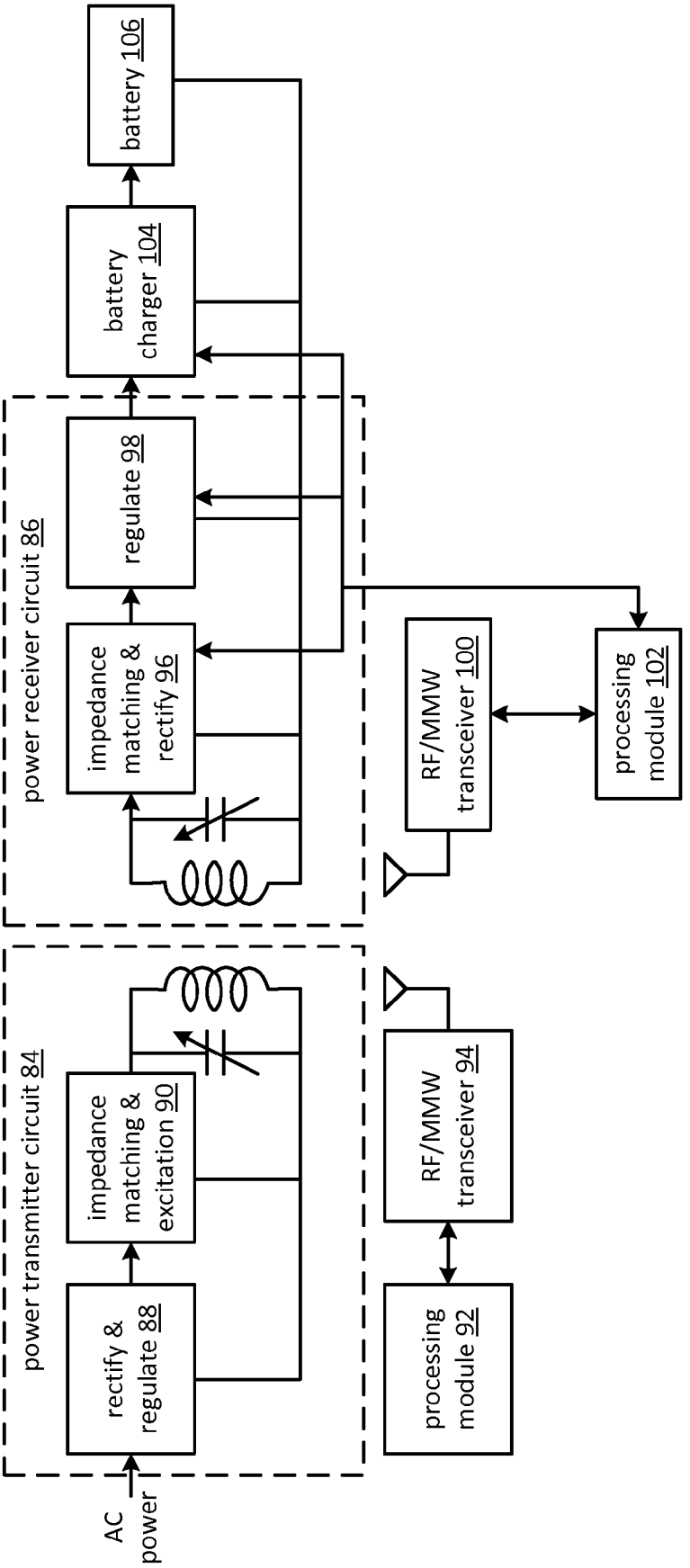
AC power
power transmitter circuit 84
rectify & regulate 88
impedance matching & excitation 90
processing module 92
RF/MMW transceiver 94
power receiver circuit 86
impedance matching & rectify 96
regulate 98
battery charger 104
battery 106
RF/MMW transceiver 100
processing module 102

FIG. 5

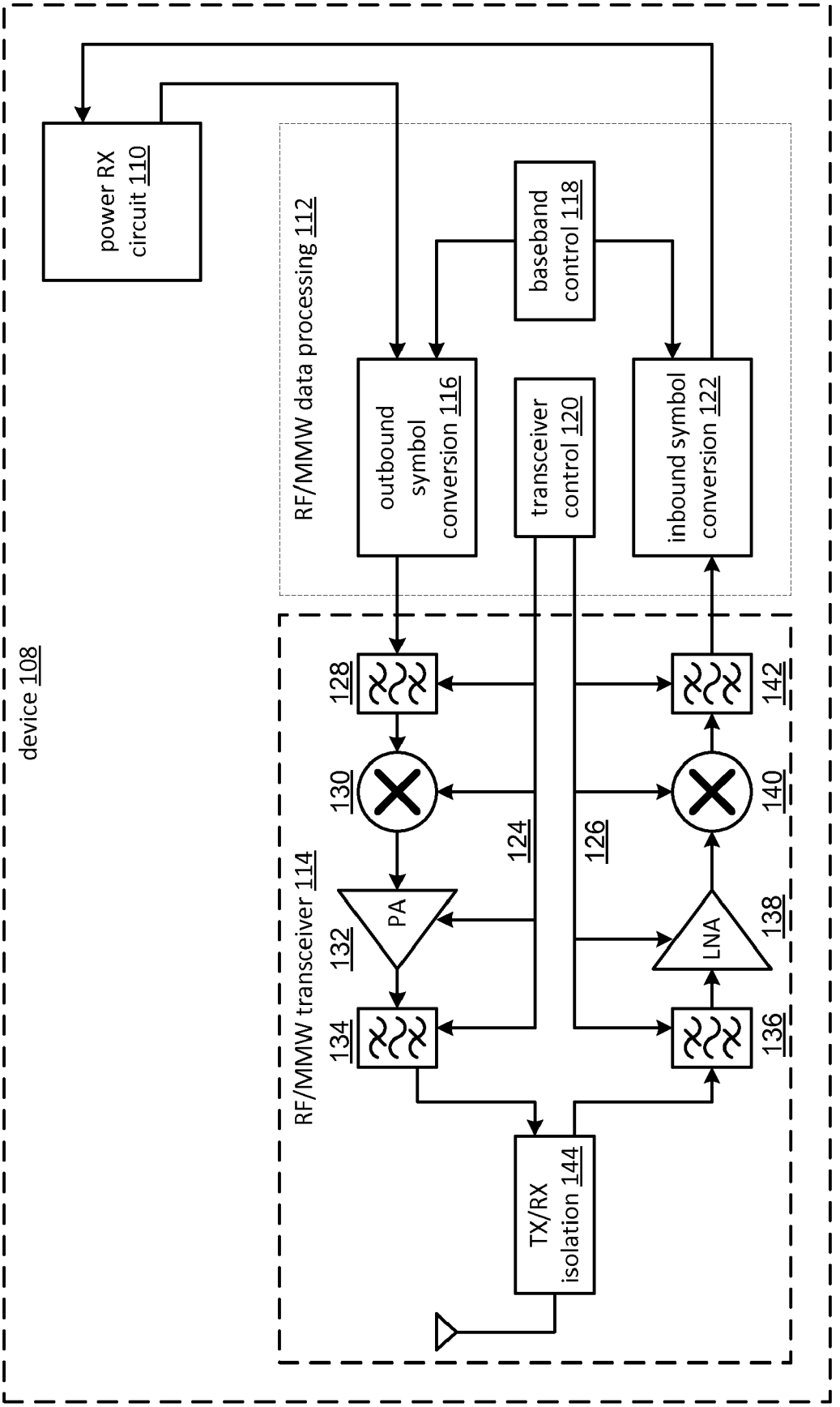
device 108
power RX circuit 110
RF/MMW data processing 112
baseband control 118
outbound symbol conversion 116
transceiver control 120
inbound symbol conversion 122
RF/MMW transceiver 114
128
130
132
PA
134
124
126
142
140
138
LNA
136
TX/RX isolation 144

FIG. 6

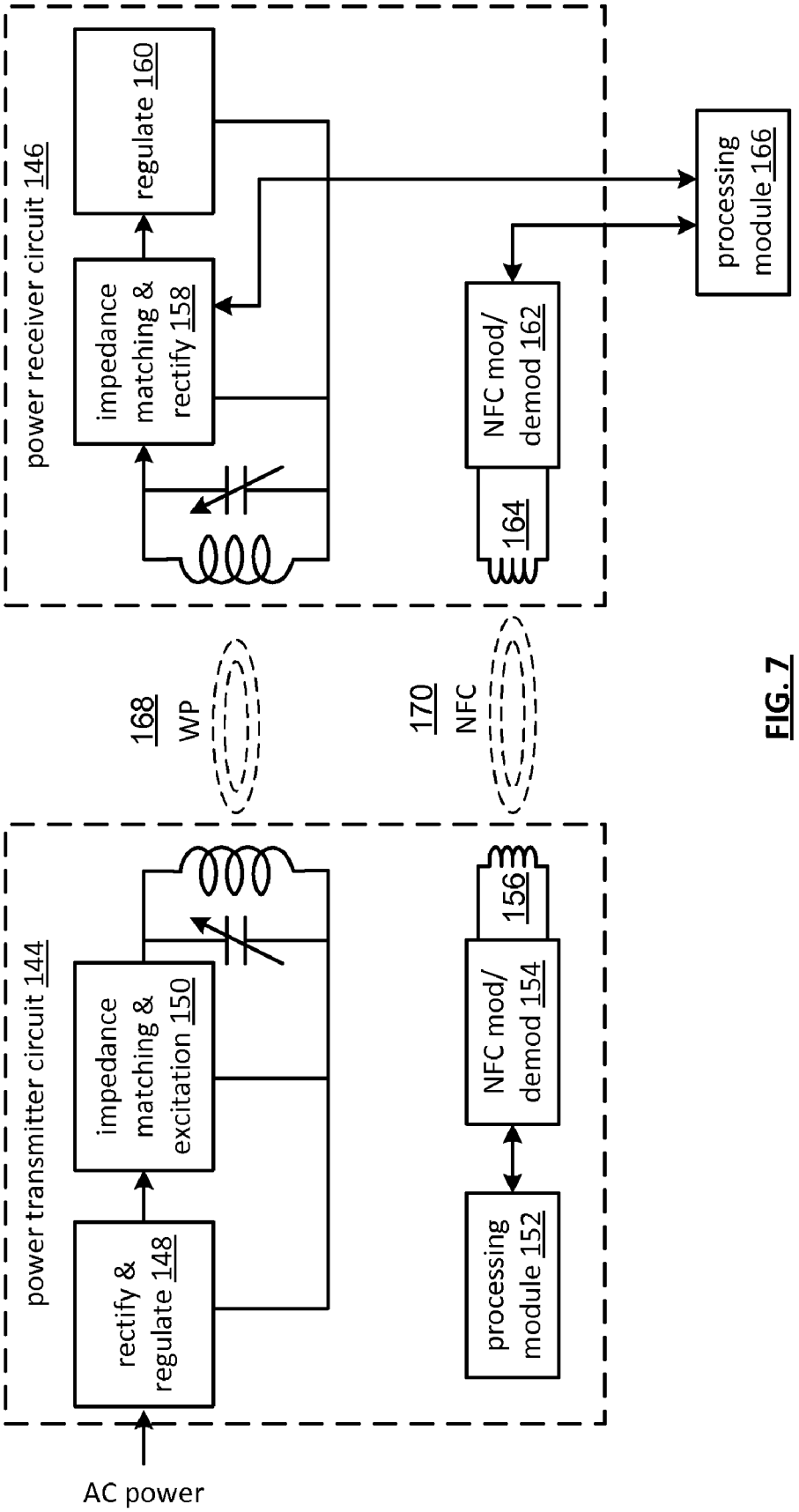
power receiver circuit 146
regulate 160
impedance matching & rectify 158
NFC mod/ demod 162
164
processing module 166
168
WP
170
NFC
power transmitter circuit 144
rectify & regulate 148
impedance matching & excitation 150
NFC mod/ demod 154
156
processing module 152
AC power

FIG. 7

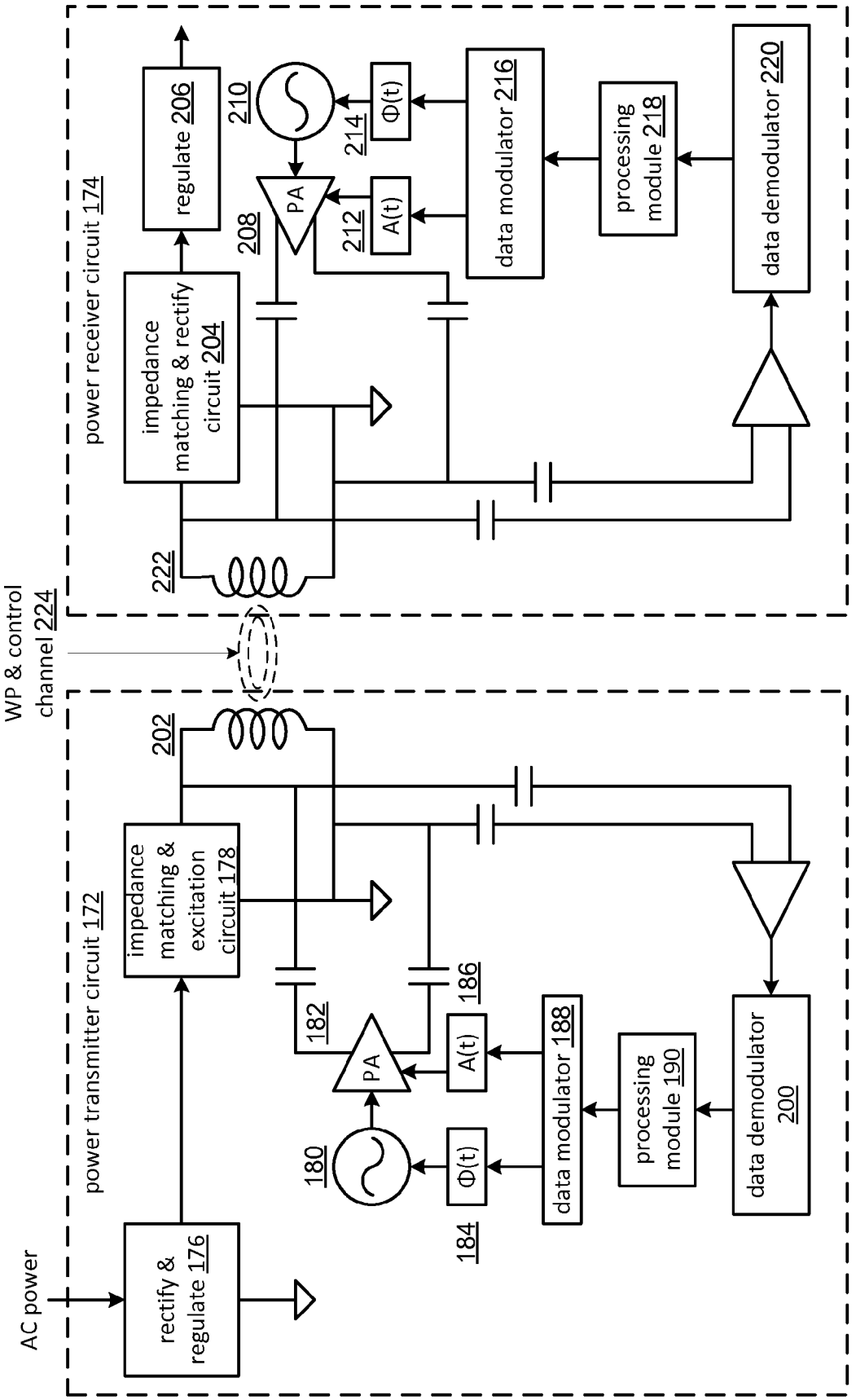
AC power
power transmitter circuit 172
rectify & regulate 176
impedance matching & excitation circuit 178
202
180
182
PA
186
A(t)
Φ(t)
184
data modulator 188
processing module 190
data demodulator 200
WP & control channel 224
power receiver circuit 174
impedance matching & rectify circuit 204
regulate 206
210
208
PA
212
A(t)
214
Φ(t)
data modulator 216
processing module 218
data demodulator 220
222

FIG. 8

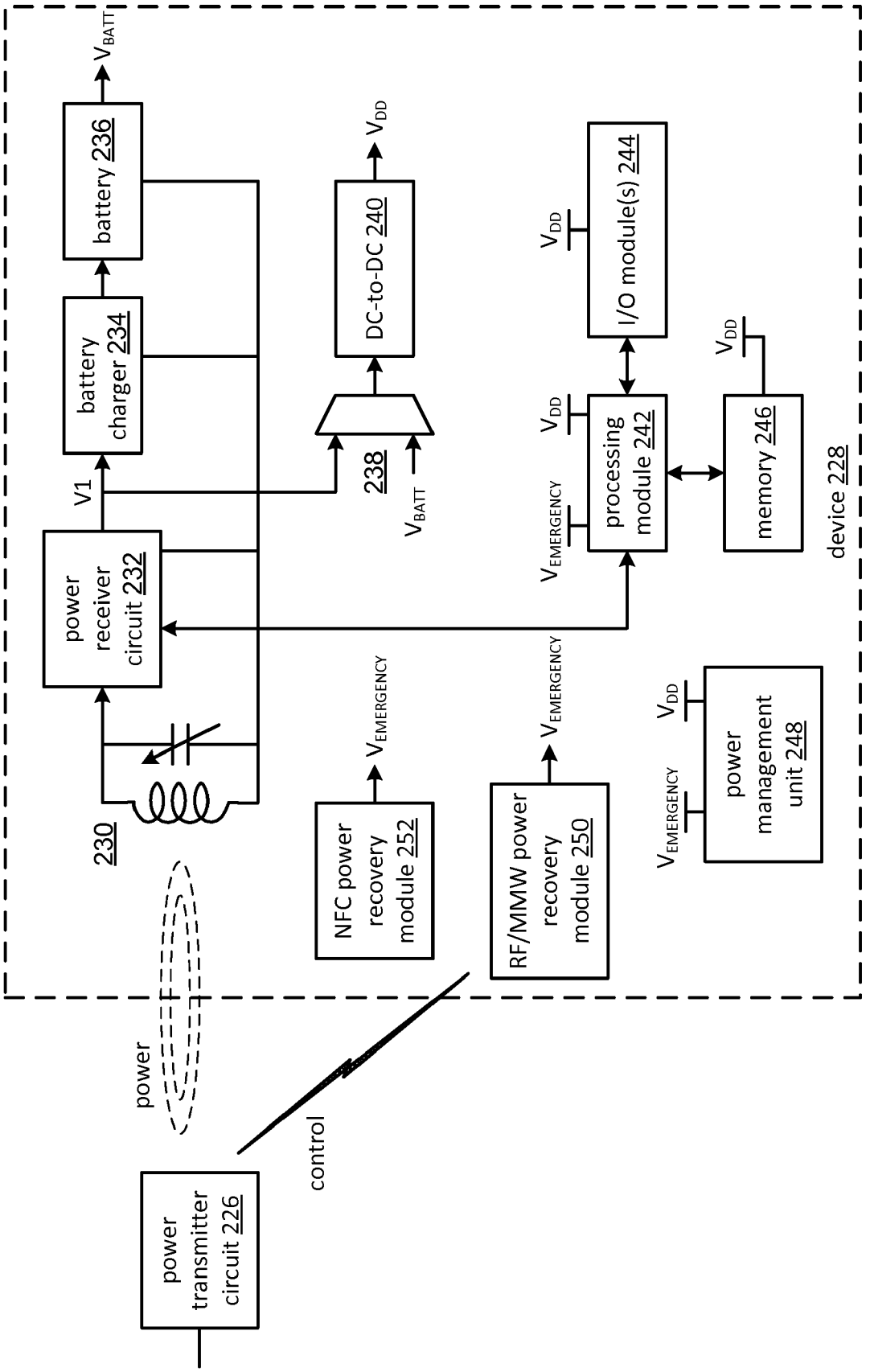
V_{BATT}
battery 236
battery charger 234
V1
power receiver circuit 232
230
power
power transmitter circuit 226
control
DC-to-DC 240
V_{DD}
238
V_{BATT}
NFC power recovery module 252
$V_{EMERGENCY}$
RF/MMW power recovery module 250
$V_{EMERGENCY}$
I/O module(s) 244
V_{DD}
processing module 242
V_{DD}
$V_{EMERGENCY}$
memory 246
V_{DD}
power management unit 248
V_{DD}
$V_{EMERGENCY}$
device 228

FIG. 9

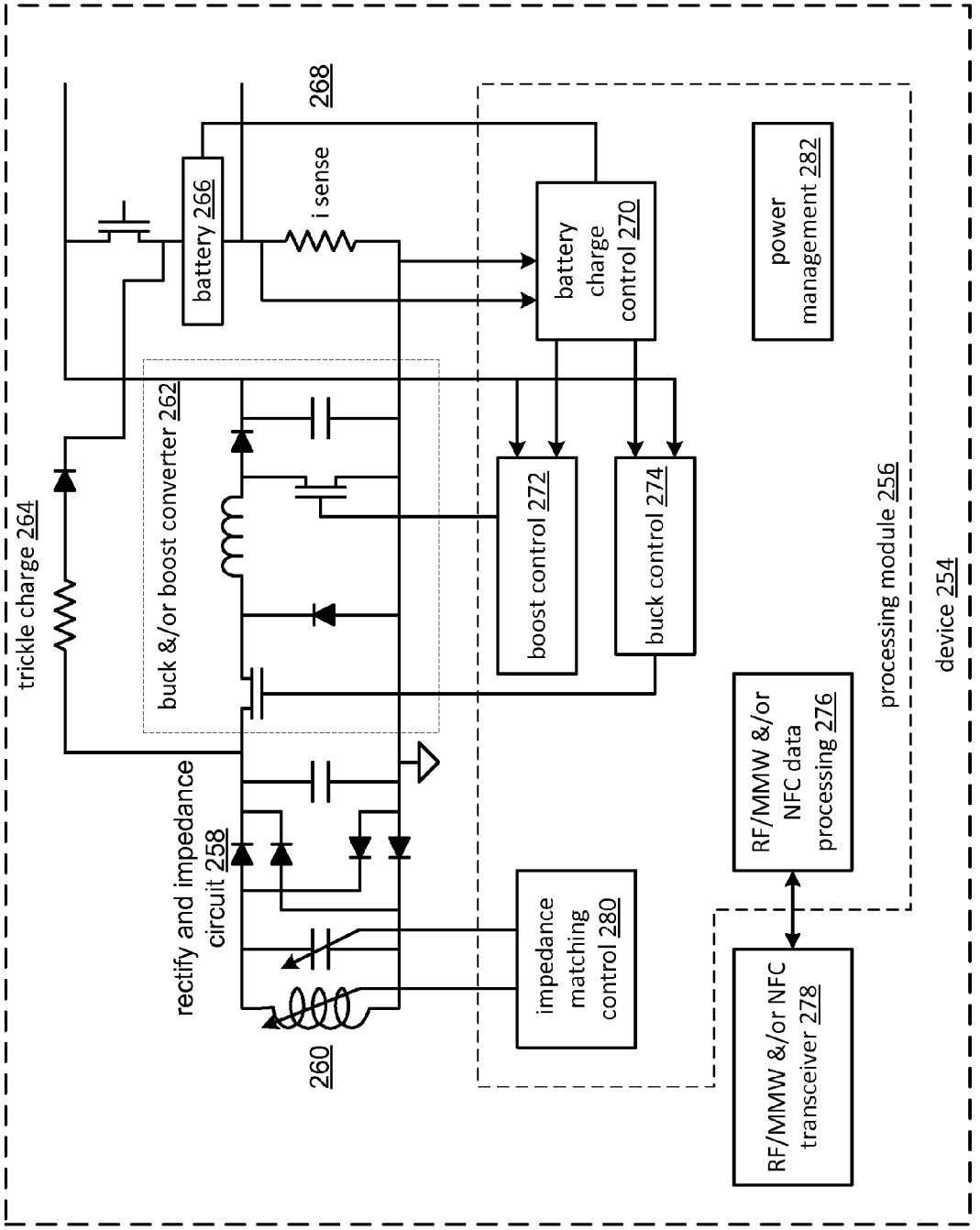
trickle charge 264
buck &/or boost converter 262
battery 266
268
i sense
battery charge control 270
power management 282
boost control 272
buck control 274
processing module 256
device 254
RF/MMW &/or NFC data processing 276
RF/MMW &/or NFC transceiver 278
impedance matching control 280
rectify and impedance circuit 258
260

FIG. 10

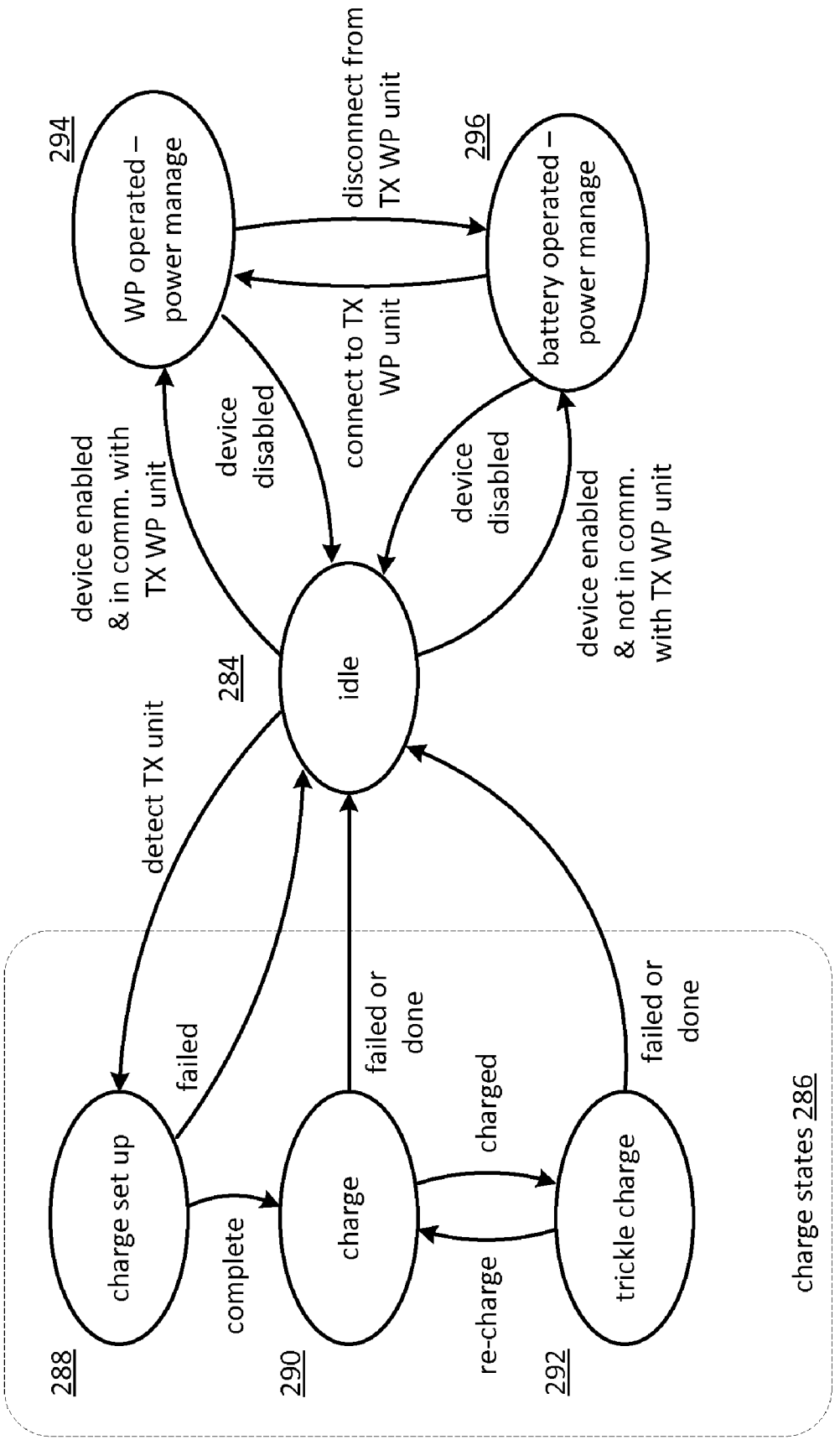
294
WP operated – power manage
disconnect from TX WP unit
296
battery operated – power manage
connect to TX WP unit
device enabled & in comm. with TX WP unit
device disabled
device disabled
device enabled & not in comm. with TX WP unit
284
idle
detect TX unit
failed
failed or done
failed or done
charged
complete
re-charge
288
charge set up
290
charge
292
trickle charge
charge states 286

FIG. 11

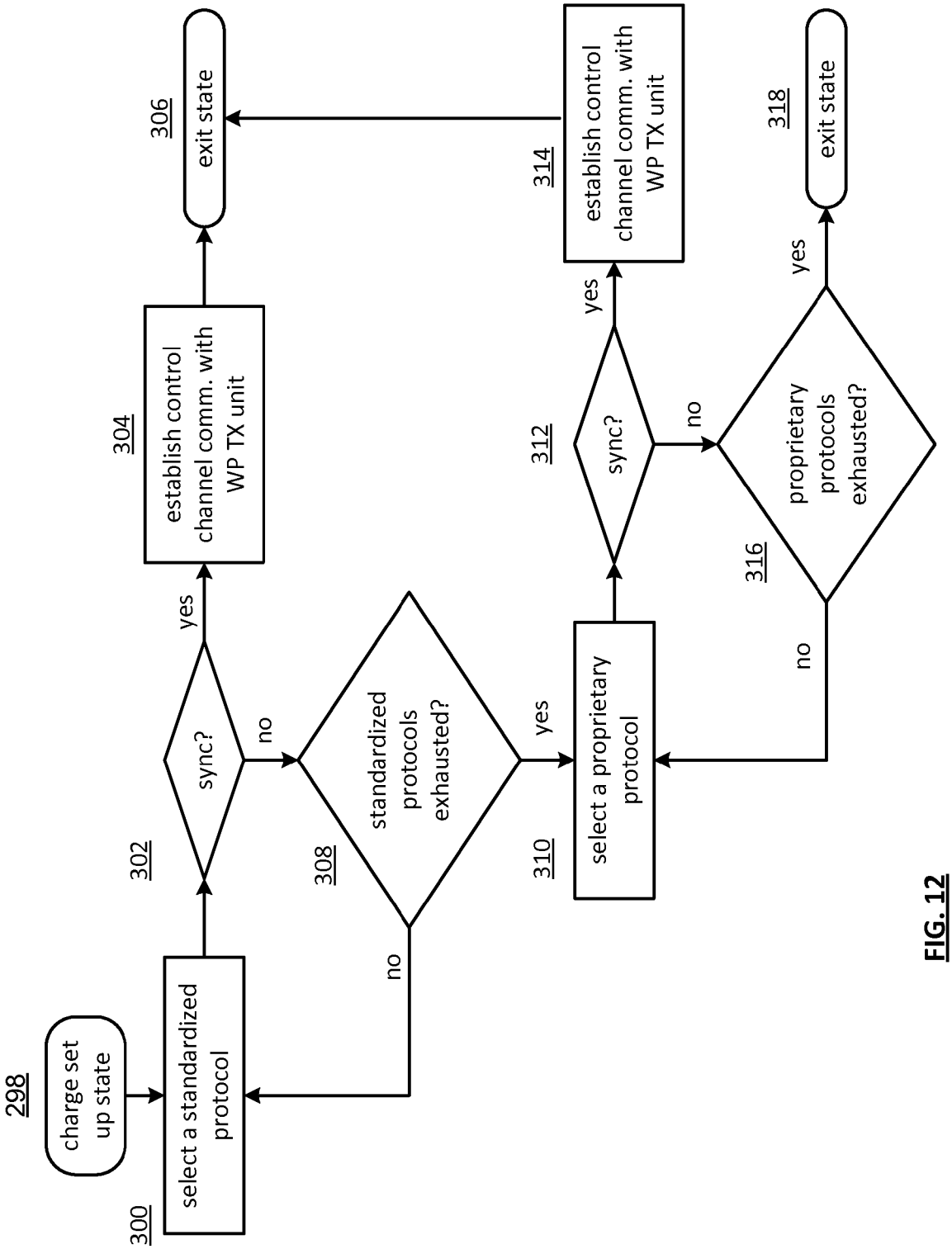
298
charge set up state
300
select a standardized protocol
302
sync?
yes
no
304
establish control channel comm. with WP TX unit
306
exit state
308
standardized protocols exhausted?
no
yes
310
select a proprietary protocol
312
sync?
yes
no
314
establish control channel comm. with WP TX unit
316
proprietary protocols exhausted?
yes
no
318
exit state

FIG. 12

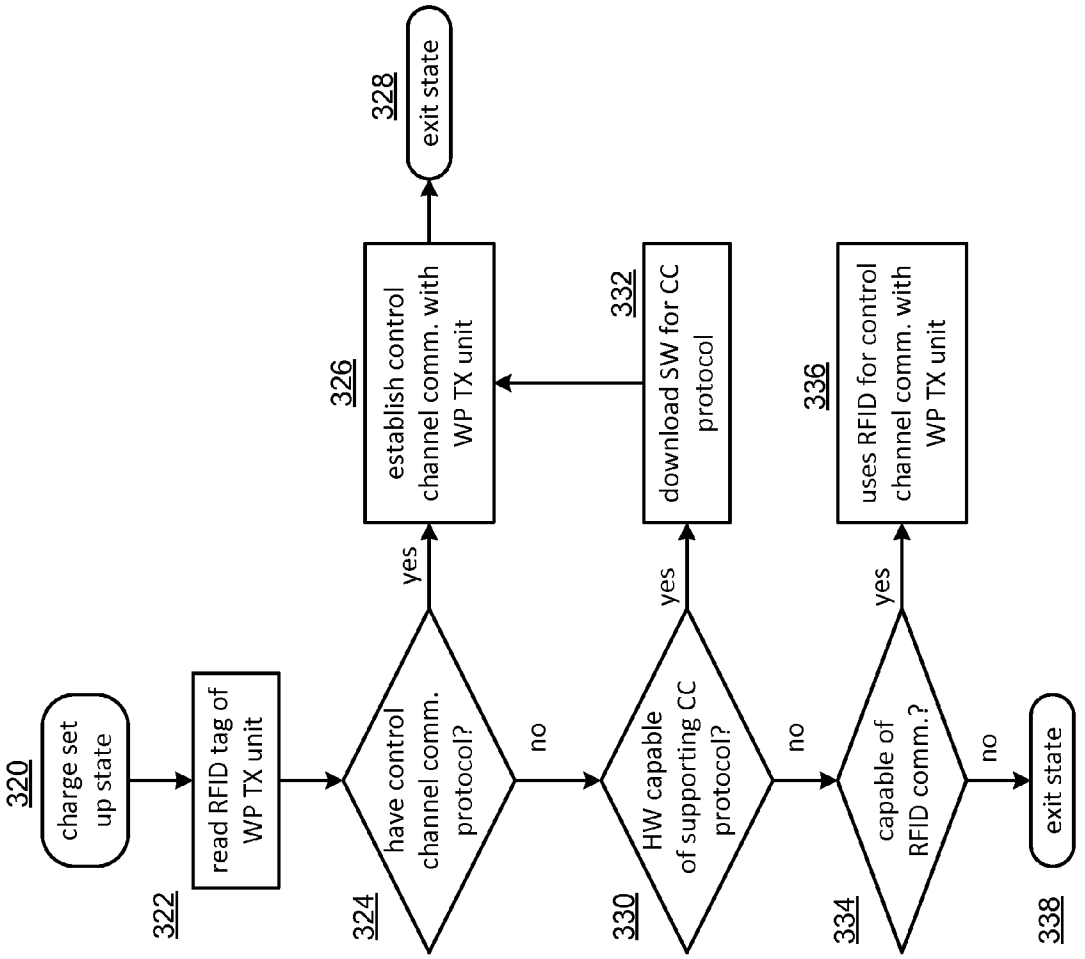
320
charge set up state
322
read RFID tag of WP TX unit
324
have control channel comm. protocol?
yes
no
326
establish control channel comm. with WP TX unit
328
exit state
330
HW capable of supporting CC protocol?
yes
no
332
download SW for CC protocol
334
capable of RFID comm.?
yes
no
336
uses RFID for control channel comm. with WP TX unit
338
exit state

FIG. 13

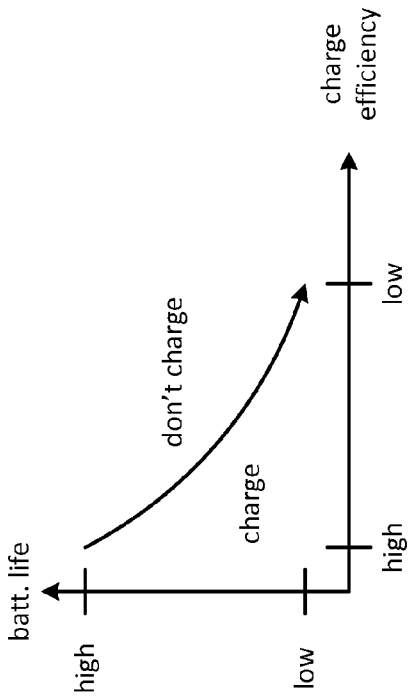
batt. life
high
low
charge
don't charge
high
low
charge efficiency

FIG. 15

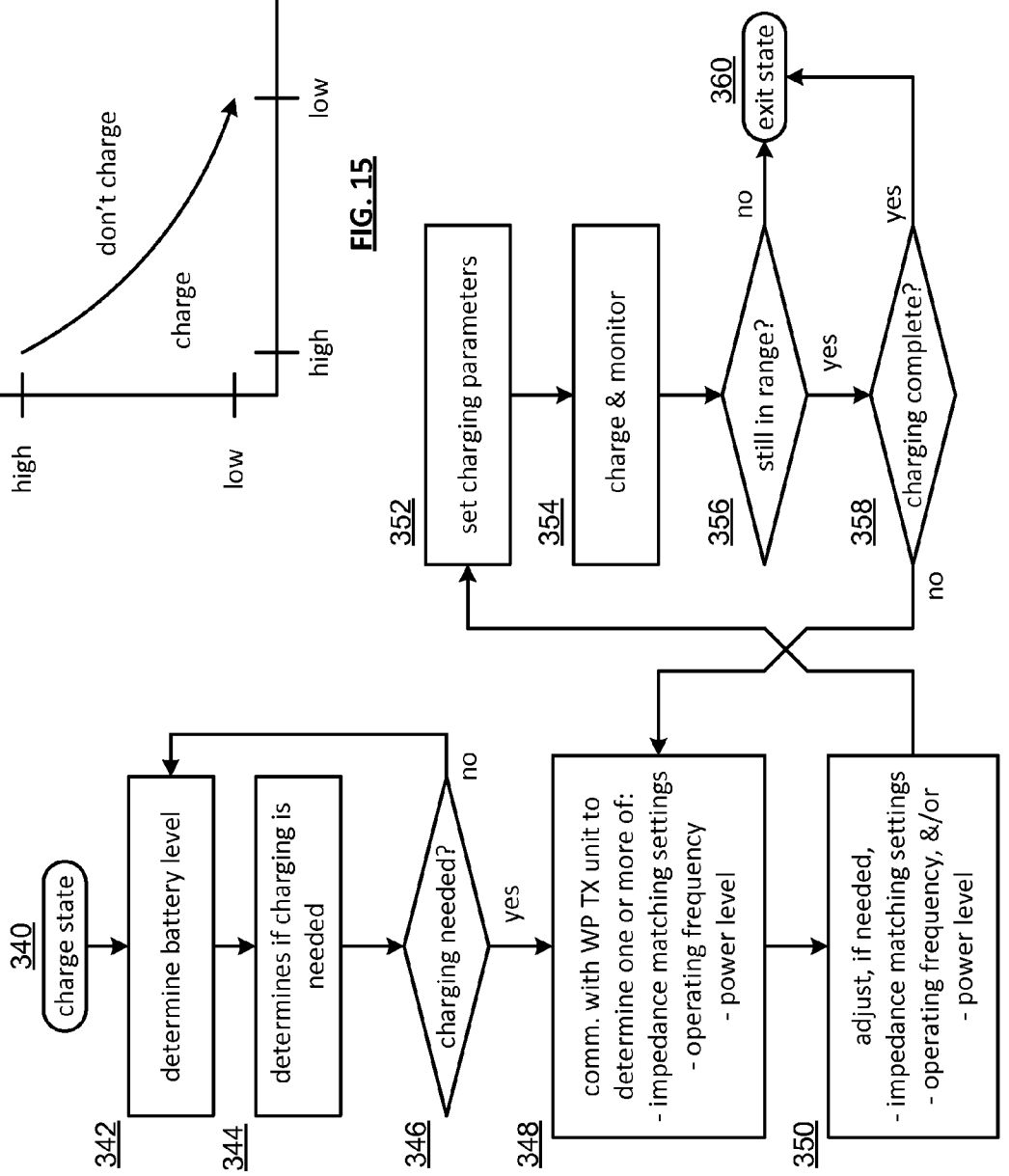
340
charge state
342
determine battery level
344
determines if charging is needed
346
charging needed?
no
yes
348
comm. with WP TX unit to determine one or more of:
- impedance matching settings
- operating frequency
- power level
350
adjust, if needed,
- impedance matching settings
- operating frequency, &/or
- power level
352
set charging parameters
354
charge & monitor
356
still in range?
no
yes
358
charging complete?
yes
no
360
exit state

FIG. 14

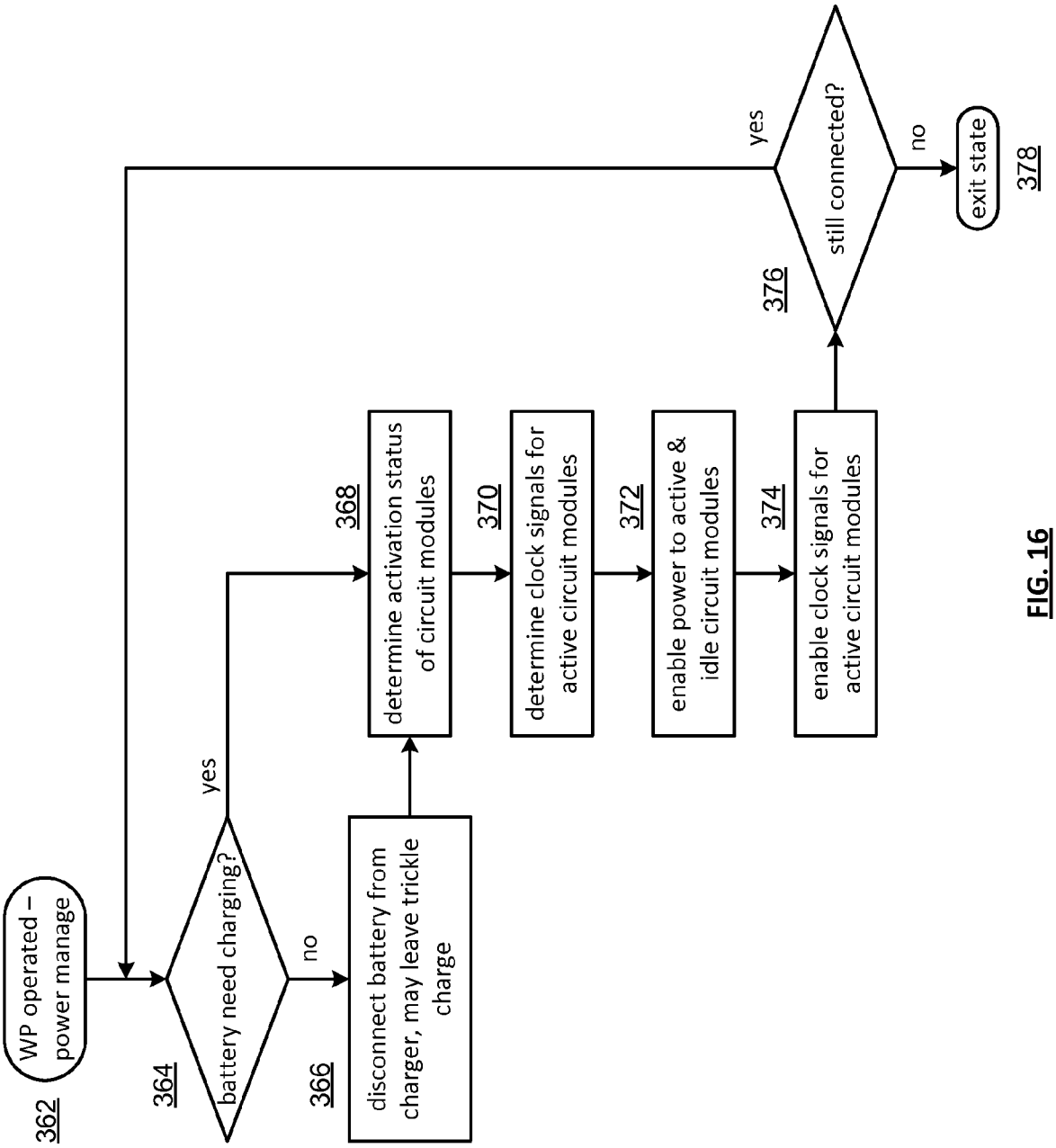
362
WP operated – power manage
364
battery need charging?
yes
no
366
disconnect battery from charger, may leave trickle charge
368
determine activation status of circuit modules
370
determine clock signals for active circuit modules
372
enable power to active & idle circuit modules
374
enable clock signals for active circuit modules
376
still connected?
yes
no
exit state
378

FIG. 16

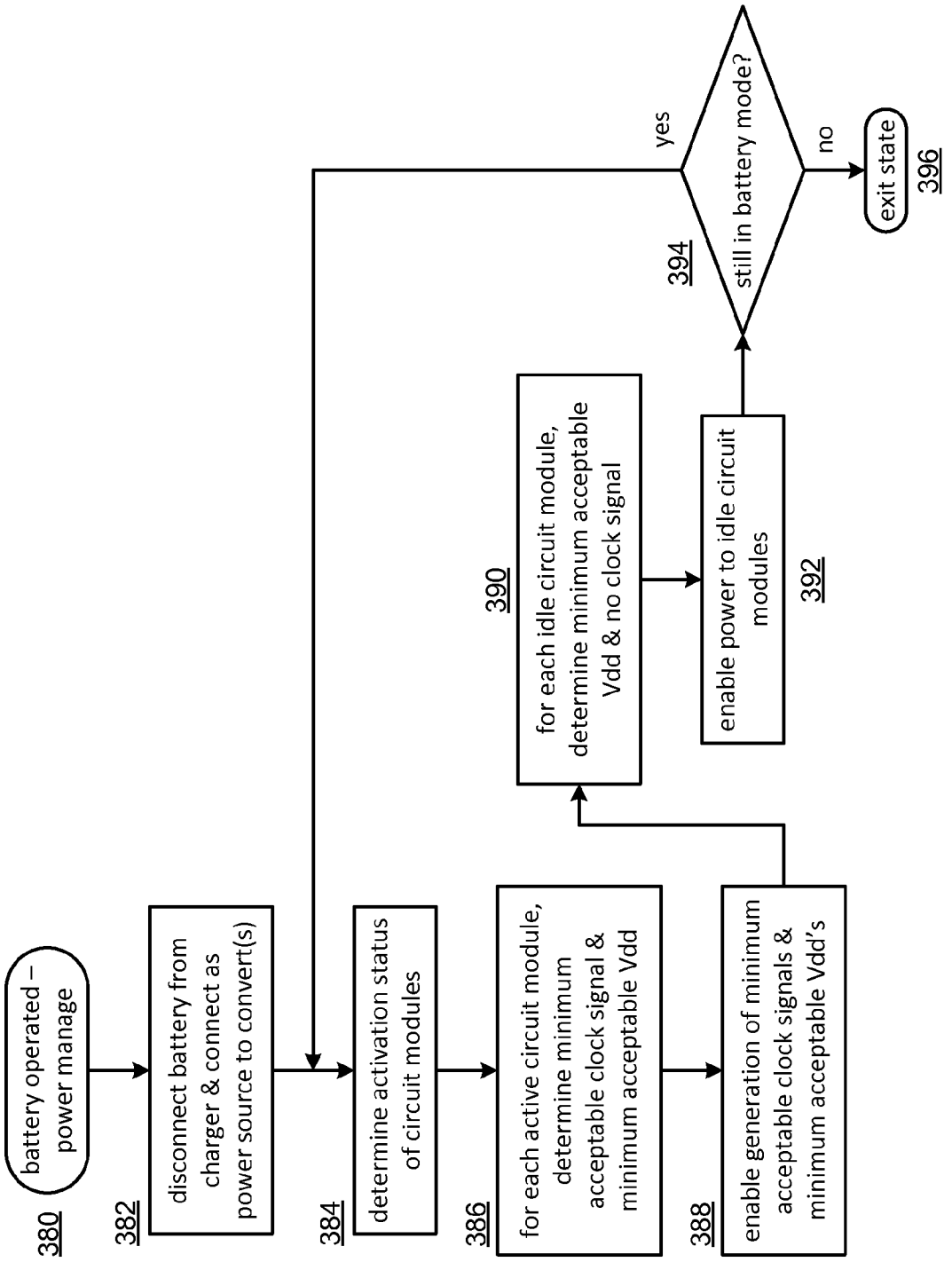
380
battery operated – power manage
382
disconnect battery from charger & connect as power source to convert(s)
384
determine activation status of circuit modules
386
for each active circuit module, determine minimum acceptable clock signal & minimum acceptable Vdd
388
enable generation of minimum acceptable clock signals & minimum acceptable Vdd's
390
for each idle circuit module, determine minimum acceptable Vdd & no clock signal
392
enable power to idle circuit modules
394
still in battery mode?
yes
no
396
exit state

FIG. 17

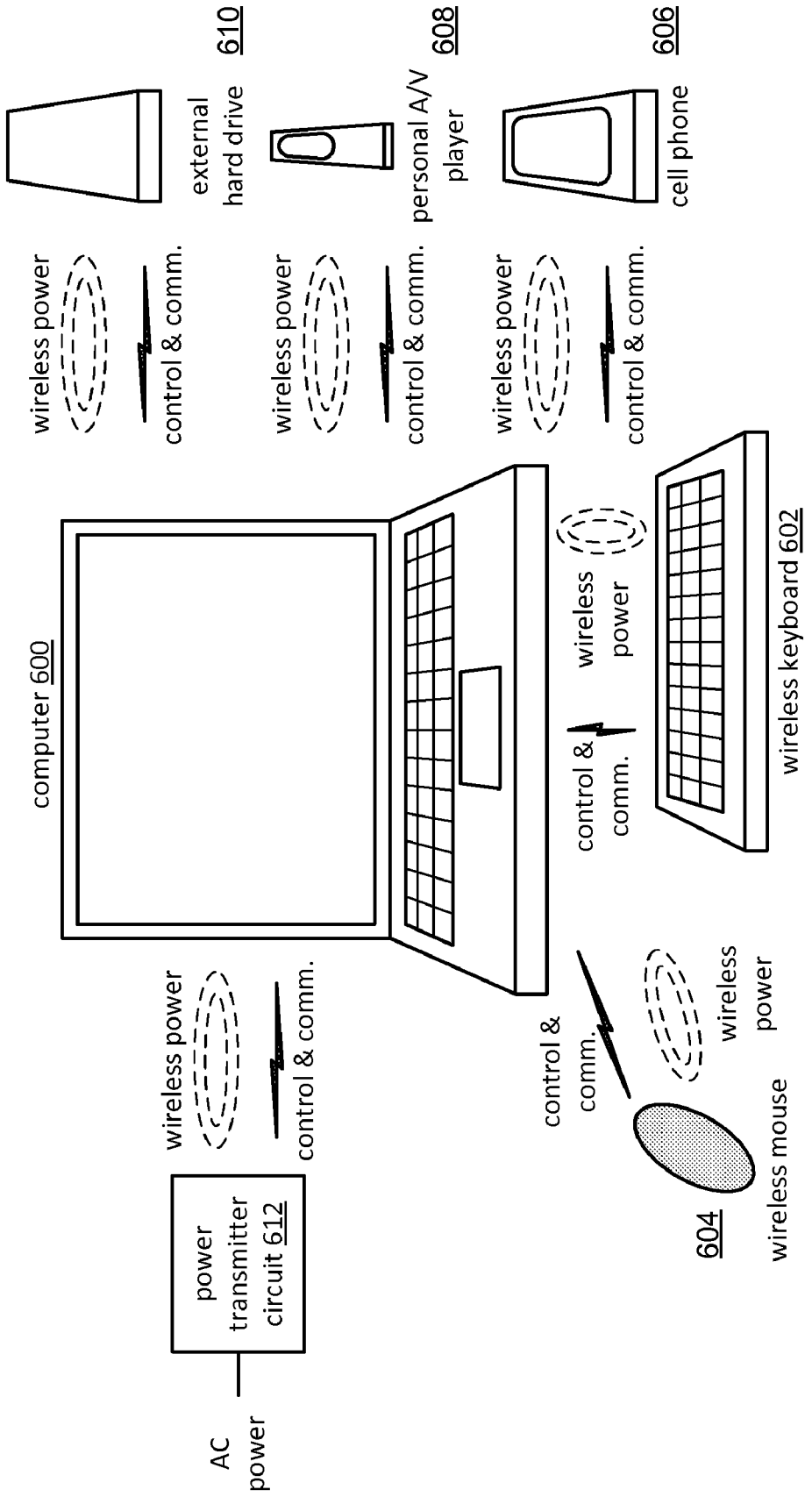
610
external hard drive
608
personal A/V player
606
cell phone
wireless power
control & comm.
wireless power
control & comm.
wireless power
control & comm.
computer 600
wireless power
control & comm.
wireless keyboard 602
control & comm.
wireless power
control & comm.
wireless power
604
wireless mouse
power transmitter circuit 612
AC power

FIG. 18

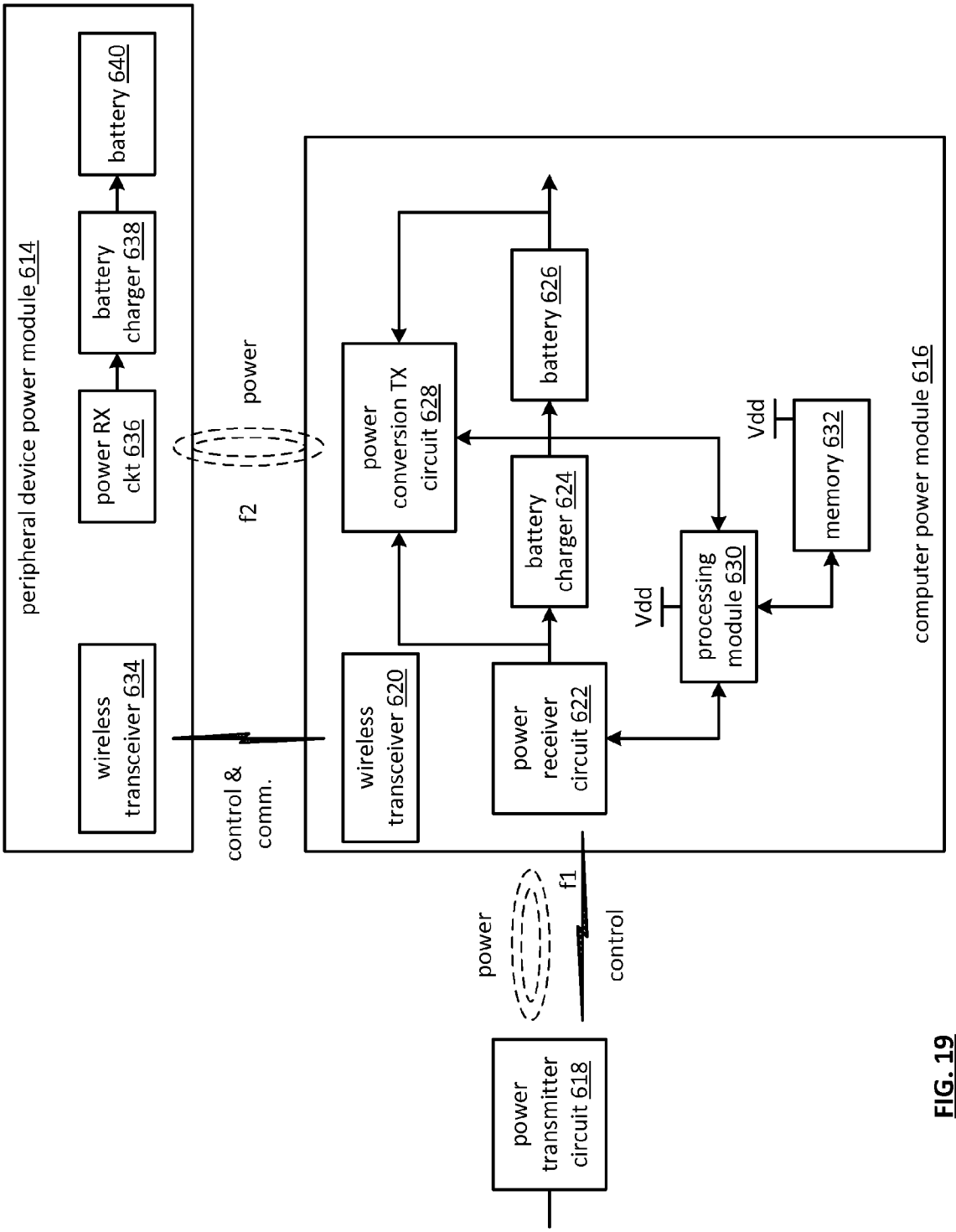
peripheral device power module 614
battery 640
battery charger 638
power RX ckt 636
wireless transceiver 634
power
f2
control & comm.
power conversion TX circuit 628
battery 626
battery charger 624
wireless transceiver 620
power receiver circuit 622
Vdd
processing module 630
Vdd
memory 632
computer power module 616
power
f1
control
power transmitter circuit 618

FIG. 19

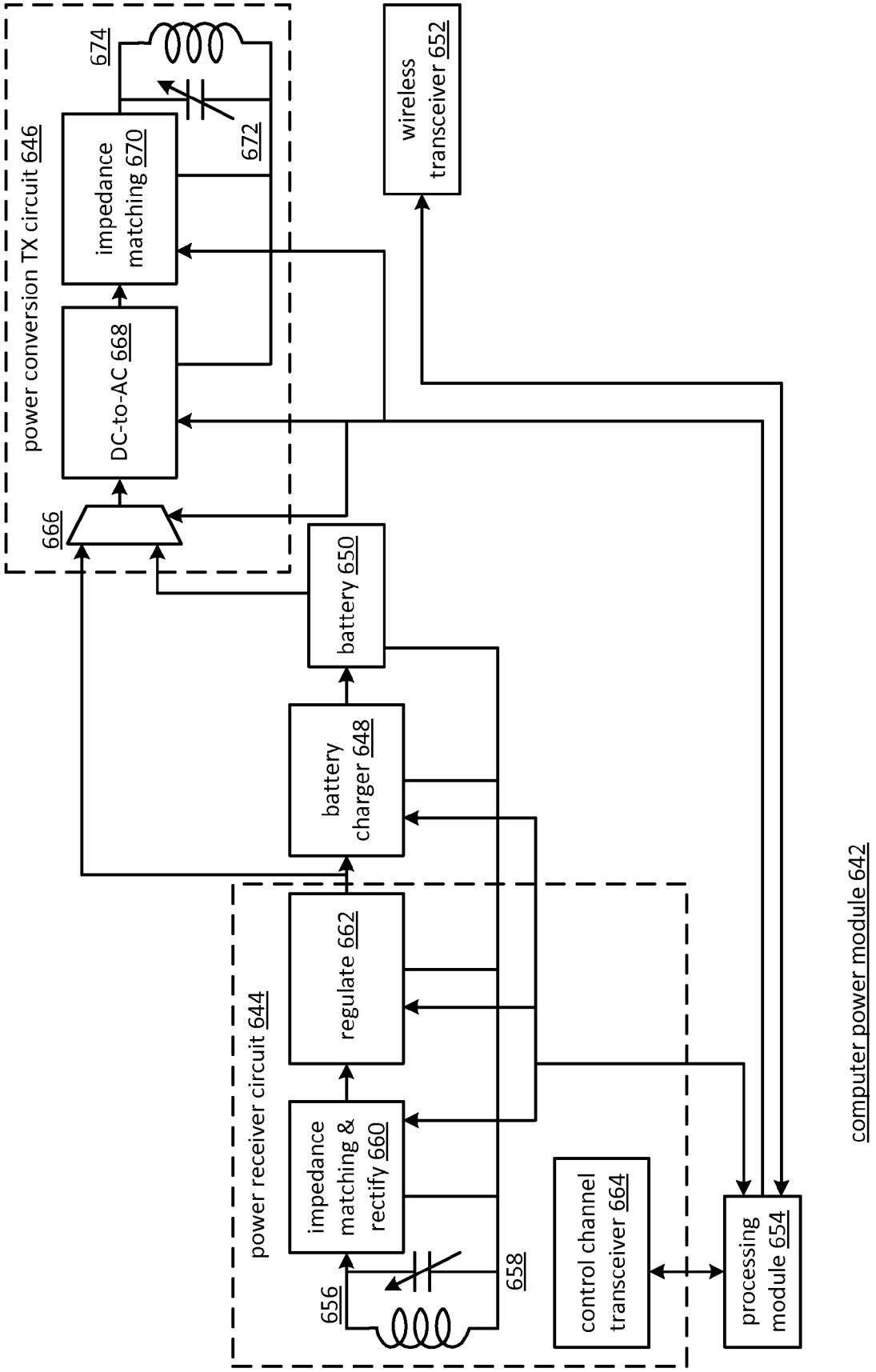
power conversion TX circuit 646
674
impedance matching 670
672
DC-to-AC 668
666
wireless transceiver 652
battery 650
battery charger 648
power receiver circuit 644
regulate 662
impedance matching & rectify 660
656
658
control channel transceiver 664
processing module 654
computer power module 642

FIG. 20

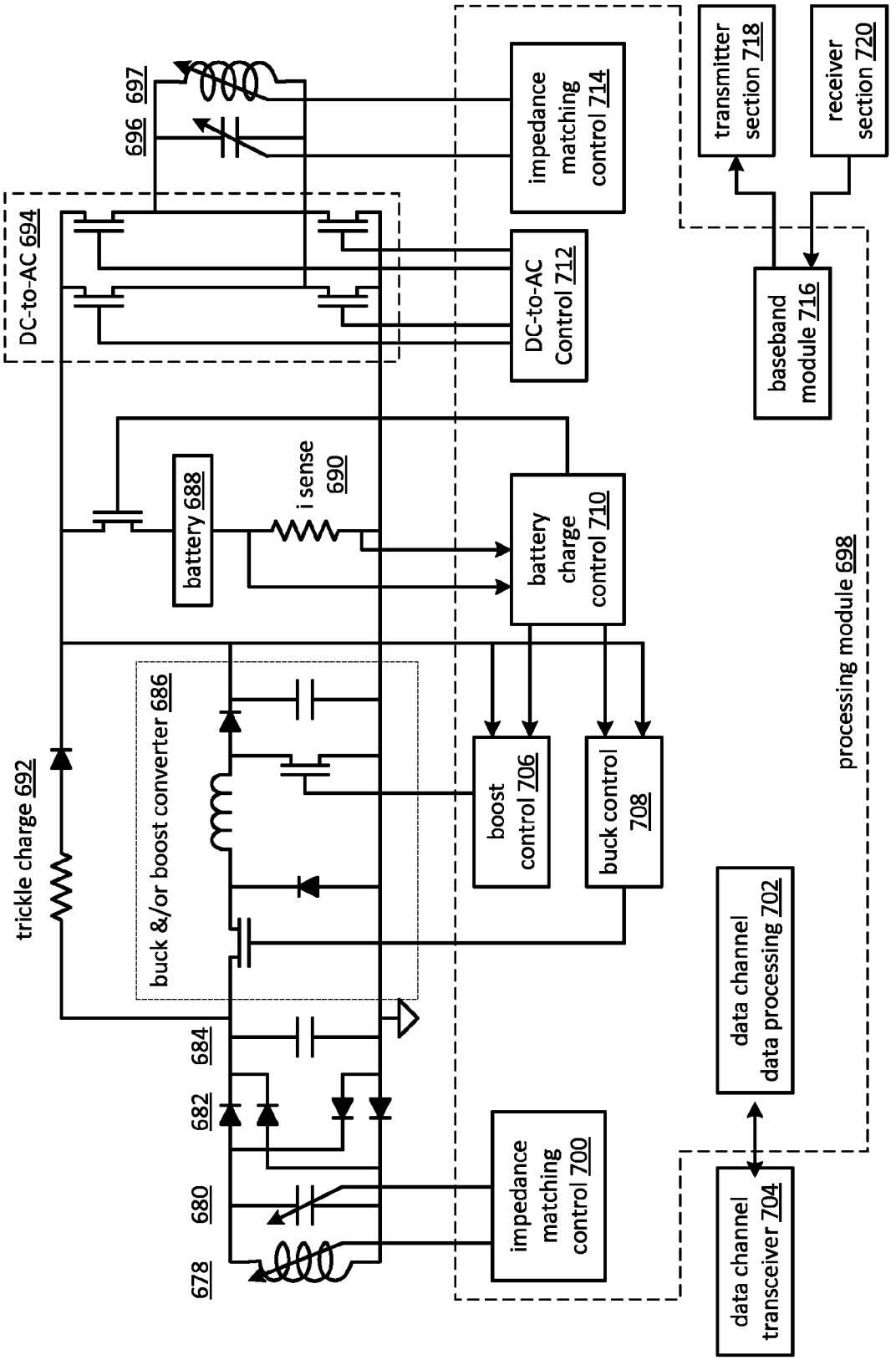
DC-to-AC 694
696
697
impedance matching control 714
DC-to-AC Control 712
transmitter section 718
receiver section 720
baseband module 716
battery 688
i sense 690
battery charge control 710
processing module 698
trickle charge 692
buck &/or boost converter 686
boost control 706
buck control 708
684
682
680
678
impedance matching control 700
data channel data processing 702
data channel transceiver 704
computer power module 676

FIG. 21

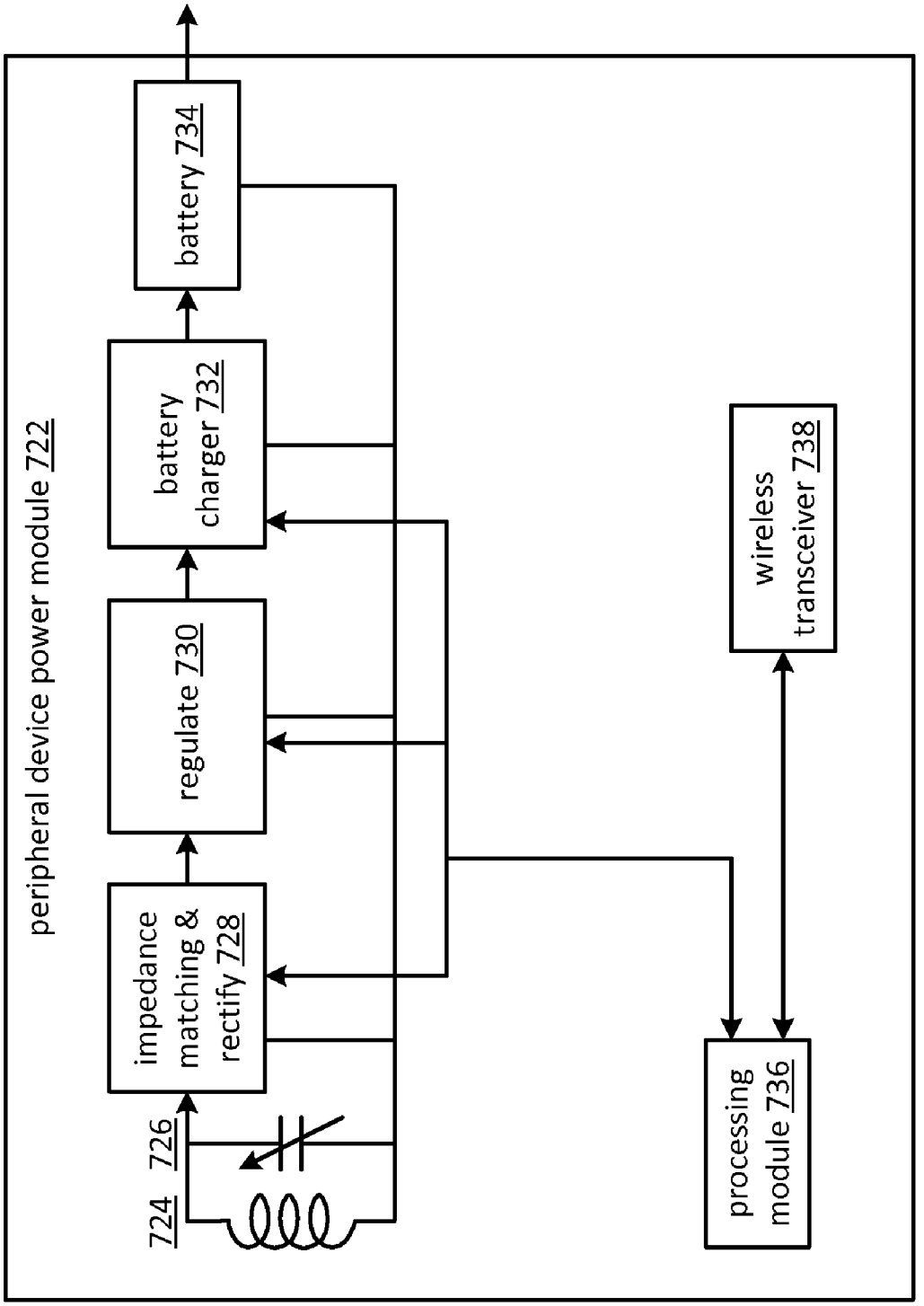
peripheral device power module 722
724
726
impedance matching & rectify 728
regulate 730
battery charger 732
battery 734
processing module 736
wireless transceiver 738

FIG. 22

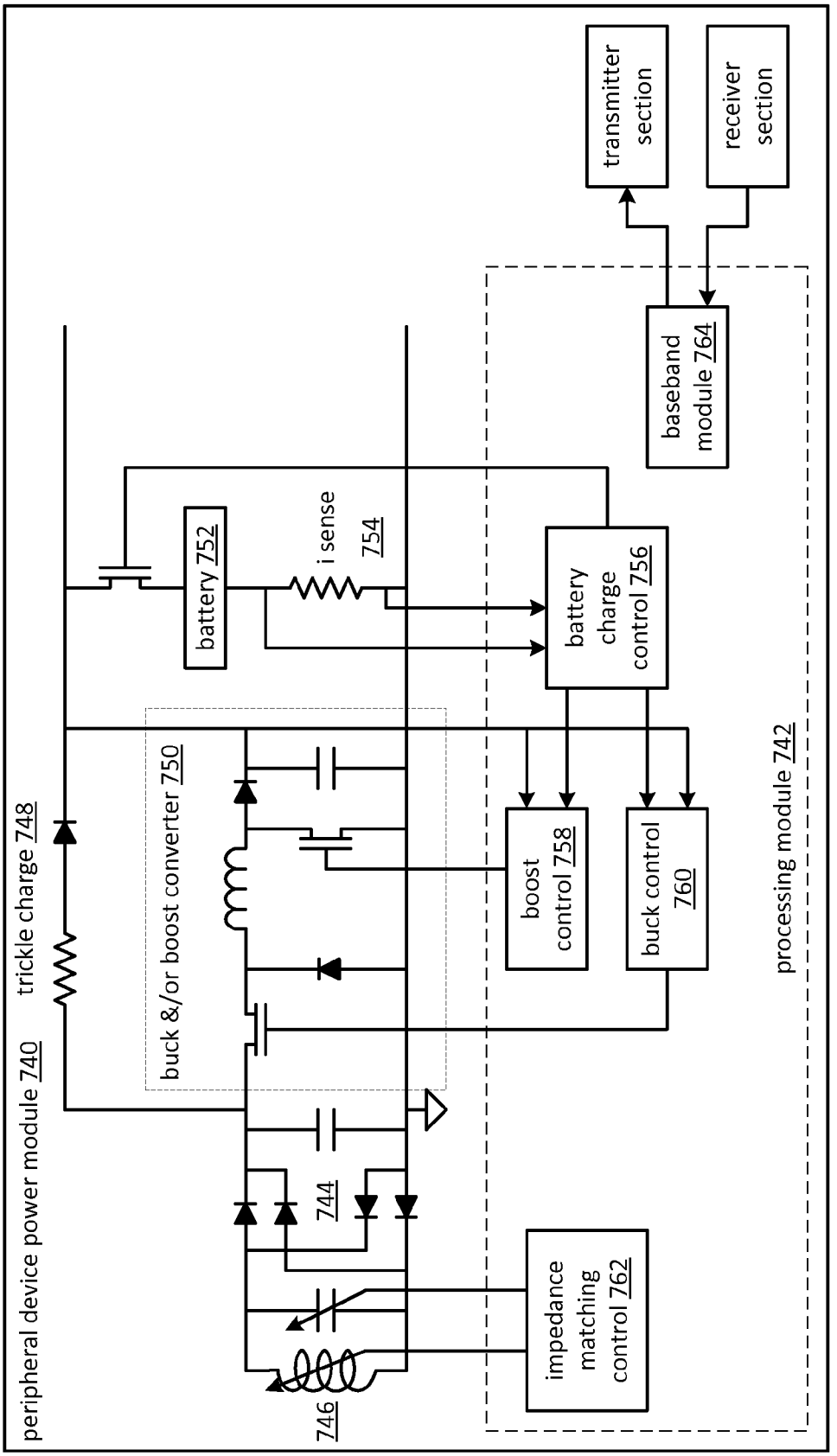
peripheral device power module 740
trickle charge 748
buck &/or boost converter 750
battery 752
i sense
754
744
746
battery charge control 756
boost control 758
buck control 760
impedance matching control 762
baseband module 764
transmitter section
receiver section
processing module 742

FIG. 23

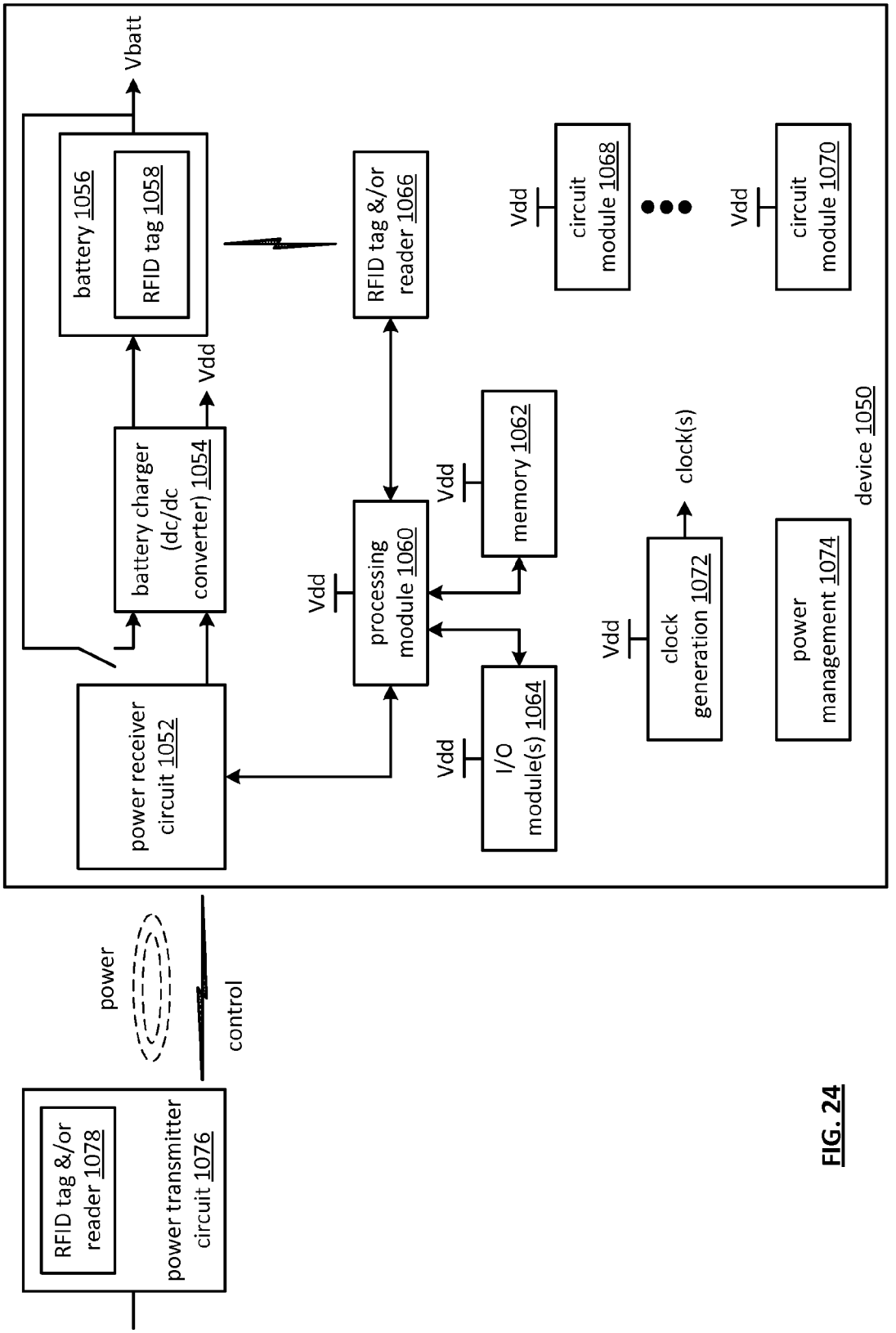
Vbatt
battery 1056
RFID tag 1058
Vdd
battery charger (dc/dc converter) 1054
power receiver circuit 1052
RFID tag &/or reader 1066
Vdd
processing module 1060
Vdd
memory 1062
Vdd
I/O module(s) 1064
Vdd
circuit module 1068
Vdd
circuit module 1070
Vdd
clock generation 1072
clock(s)
power management 1074
device 1050
power
control
RFID tag &/or reader 1078
power transmitter circuit 1076

FIG. 24

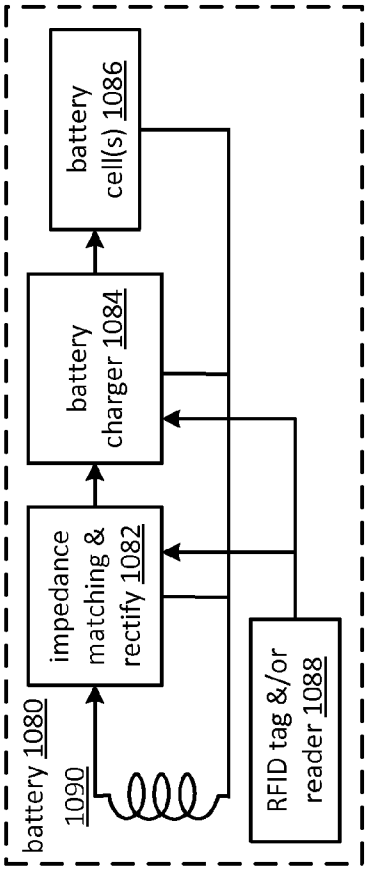
battery 1080
1090
impedance matching & rectify 1082
battery charger 1084
battery cell(s) 1086
RFID tag &/or reader 1088

FIG. 25

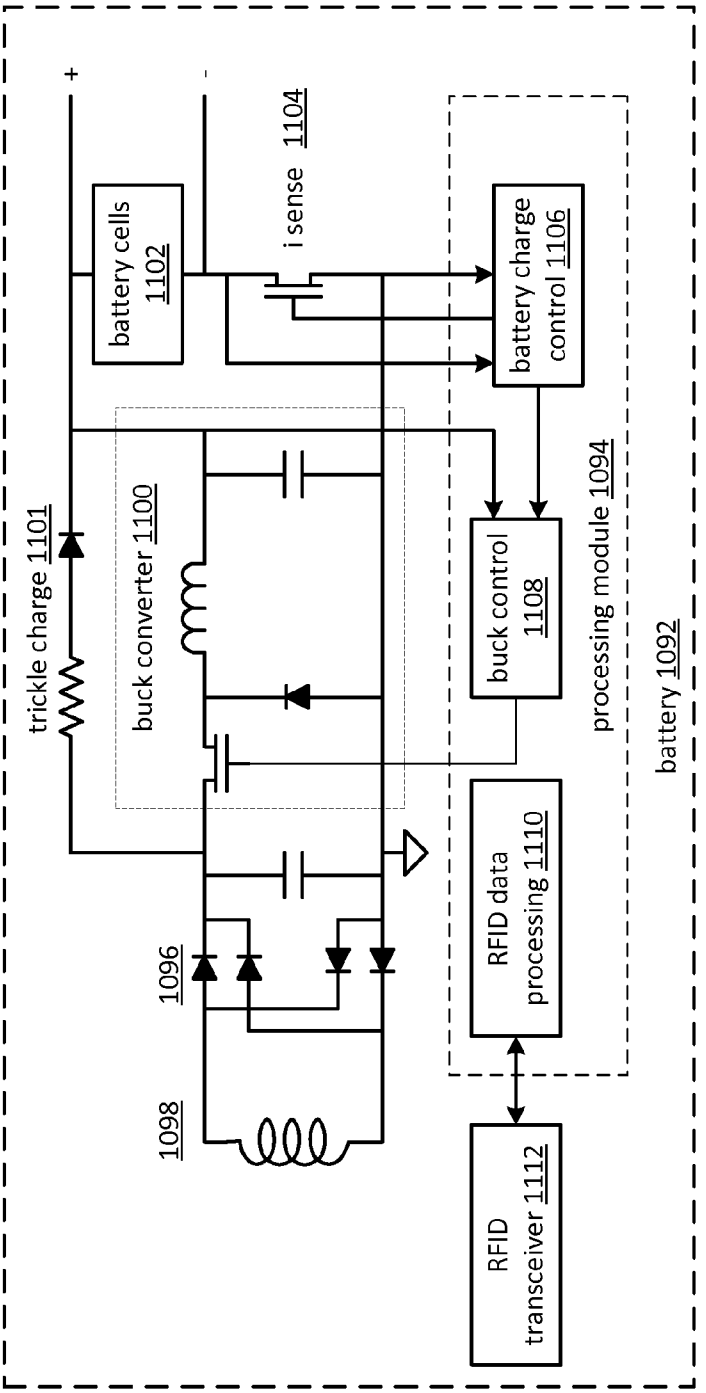
+
-
battery cells 1102
i sense 1104
battery charge control 1106
trickle charge 1101
buck converter 1100
buck control 1108
processing module 1094
battery 1092
1096
1098
RFID data processing 1110
RFID transceiver 1112

FIG. 26

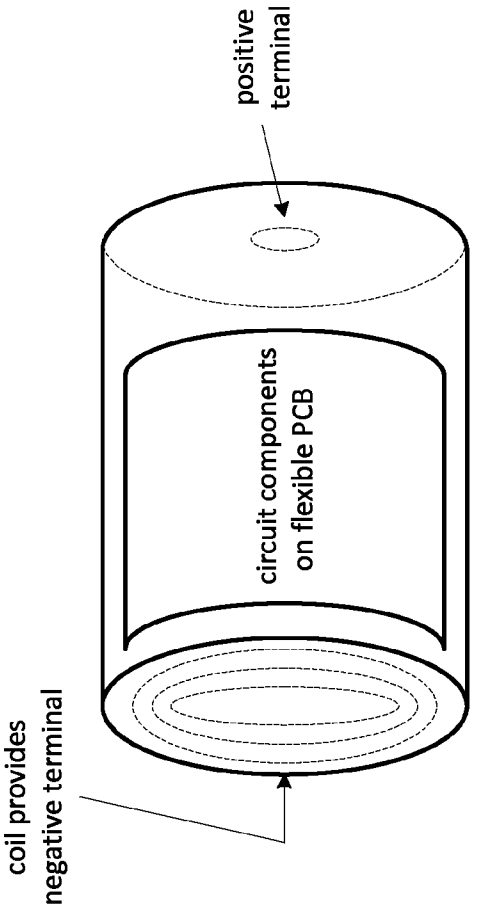
positive terminal
circuit components on flexible PCB
coil provides negative terminal

FIG. 27

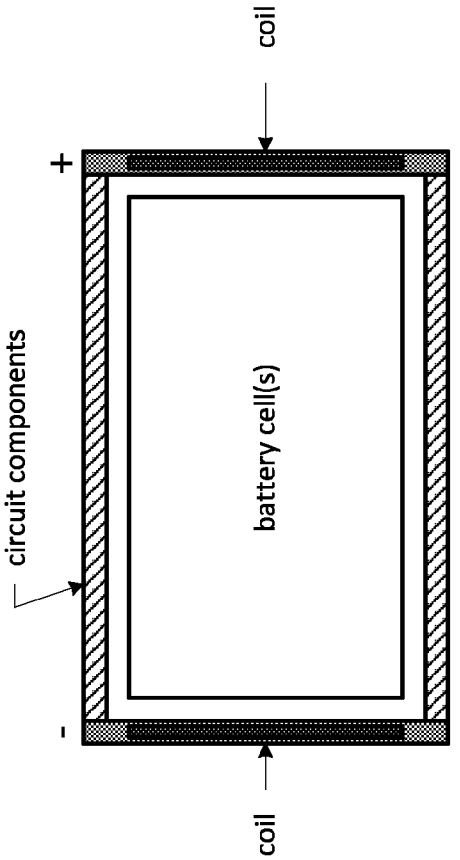
coil
+
circuit components
battery cell(s)
-
coil

FIG. 28

BATTERY WITH INTEGRATED WIRELESS POWER RECEIVER AND/OR RFID

This patent application is claiming priority under 35 USC §119 to a provisionally filed patent application entitled WIRELESS POWER SYSTEMS AND METHODS, having a provisional filing date of Nov. 30, 2009, and a provisional Ser. No. of 61/264,925.

STATEMENT REGARDING FEDERALLY SPONSORED RESEARCH OR DEVELOPMENT

NOT APPLICABLE

INCORPORATION-BY-REFERENCE OF MATERIAL SUBMITTED ON A COMPACT DISC

NOT APPLICABLE

BACKGROUND OF THE INVENTION

1. Technical Field of the Invention

This invention relates to power conversion and more particularly to wireless power conversion and supporting communications thereof.

2. Description of Related Art

The concept of wireless power (i.e., powering a device without an electrical power cord) has been around for a while and has recently been commercialized. In addition, there are a couple of on-going standards discussions (WPC—wireless communication alliance and CEA—consumer electronics association) to standardize wireless power systems.

Current commercially available wireless power products include a transmit unit, a receive unit, and a bidirectional control channel. In these products, the primary method of energy transfer is inductive coupling, but some lower power applications may include solar energy transfer, thermo-electronic energy transfer, and/or capacitive energy transfer. To use these products, the receive unit is a separate unit that must be coupled to a device that is to be wirelessly powered. Thus, the device itself cannot be wirelessly powered without the receive unit coupled to it.

To develop these products, effort has been spent on inductive power transfer, closed loop systems, and multiple load support. In the area of inductive power transfer, effort has been spent on optimizing the tuning the transmit and receive circuits (each of which includes a single inductor) for resonance, efficiency, and/or thermal issues, detecting loads, turning off the inductive power transfer, coil alignment, magnetic alignment, lower phantom power, Class D, E power transmitters with load compensation, antenna design, and coil switching. In the area of multiple load support, effort has been spent on power sharing and tuning, control channel multi-access, and collision avoidance.

In the area of closed loop systems, effort has been spent on regulating the transmit power, the transmit resonance, alignment to maximize safety and/or power transfer using a particular control channel protocol (e.g., backscatter, IrDA, or Bluetooth). As such, as long as the receive unit and transmit unit are from the same vendor using the same communication protocol for the control channel, wireless power transfer can occur. While the above referenced standards organization are attempting to establish standards regarding the control channel protocol, currently, vendors are free to use whatever protocol they chose, making compatibility issues between different vendors' wireless power products.

While effort has been spent to commercialize wireless power systems, there is still significant effort needed to make cost-effective and/or feature rich wireless power systems.

BRIEF SUMMARY OF THE INVENTION

The present invention is directed to apparatus and methods of operation that are further described in the following Brief Description of the Drawings, the Detailed Description of the Invention, and the claims. Other features and advantages of the present invention will become apparent from the following detailed description of the invention made with reference to the accompanying drawings.

BRIEF DESCRIPTION OF THE SEVERAL VIEWS OF THE DRAWING(S)

FIG. **1** is a schematic block diagram of an embodiment of a wireless power system in accordance with the present invention;

FIG. **2** is a schematic block diagram of another embodiment of a wireless power system in accordance with the present invention;

FIG. **3** is a schematic block diagram of another embodiment of a wireless power system in accordance with the present invention;

FIG. **4** is a schematic block diagram of another embodiment of a wireless power system in accordance with the present invention;

FIG. **5** is a schematic block diagram of another embodiment of a wireless power system in accordance with the present invention;

FIG. **6** is a schematic block diagram of an embodiment of a wirelessly powered device in accordance with the present invention;

FIG. **7** is a schematic block diagram of an embodiment of a portion of a wireless power system in accordance with the present invention;

FIG. **8** is a schematic block diagram of another embodiment of a portion of a wireless power system in accordance with the present invention;

FIG. **9** is a schematic block diagram of another embodiment of a wireless power system in accordance with the present invention;

FIG. **10** is a schematic block diagram of another embodiment of a wirelessly powered device in accordance with the present invention;

FIG. **11** is an example state diagram of a processing module of a wirelessly powered device in accordance with the present invention;

FIG. **12** is a logic diagram of an embodiment of a method for a charge set up state in accordance with the present invention;

FIG. **13** is a logic diagram of another embodiment of a method for a charge set up state in accordance with the present invention;

FIG. **14** is a logic diagram of an embodiment of a method for a charge state in accordance with the present invention;

FIG. **15** is a diagram of an example of a graph of charge need versus charge efficiency in accordance with the present invention;

FIG. **16** is a logic diagram of an embodiment of a method for a wirelessly powered power management state in accordance with the present invention;

FIG. **17** is a logic diagram of an embodiment of a method for a battery powered power management state in accordance with the present invention;

FIG. **18** is a schematic block diagram of an embodiment of a wireless power computer system in accordance with the present invention;

FIG. **19** is a schematic block diagram of an embodiment of power modules within a wireless power computer system in accordance with the present invention;

FIG. **20** is a schematic block diagram of an embodiment of a computer power module in accordance with the present invention;

FIG. **21** is a schematic block diagram of another embodiment of a computer power module in accordance with the present invention;

FIG. **22** is a schematic block diagram of an embodiment of a peripheral device power module in accordance with the present invention;

FIG. **23** is a schematic block diagram of another embodiment of a peripheral device power module in accordance with the present invention;

FIG. **24** is a schematic block diagram of another embodiment of a wireless power system in accordance with the present invention;

FIG. **25** is a schematic block diagram of an embodiment of a wirelessly chargeable battery in accordance with the present invention;

FIG. **26** is a schematic block diagram of another embodiment of a wirelessly chargeable battery in accordance with the present invention;

FIG. **27** is a diagram of an embodiment of a wirelessly chargeable battery in accordance with the present invention; and

FIG. **28** is a diagram of another embodiment of a wirelessly chargeable battery in accordance with the present invention.

DETAILED DESCRIPTION OF THE INVENTION

FIG. **1** is a schematic block diagram of an embodiment of a wireless power system that includes a wireless power (WP) transmit (TX) unit **10** and one or more devices **12-14**. The WP TX unit **10** includes a processing module **18**, a WP transceiver **20**, and a power TX circuit **16**. Each device **12-14** includes a WP receive (RX) circuit **22**, **28**, a processing module **26**, **32**, and a WP transceiver **24**, **30**. The device **12-14** will most likely include a plurality of other components depending on its desired functionality. For example, the device **12-14** may be a cell phone, a personal audio/video player, a video game unit, a toy, etc. and includes the corresponding circuitry.

The processing modules **18**, **26**, **32** of the WP TX unit **10** and in each of the devices **12-14** may each be a single processing device or a plurality of processing devices. Such a processing device may be a microprocessor, micro-controller, digital signal processor, microcomputer, central processing unit, field programmable gate array, programmable logic device, state machine, logic circuitry, analog circuitry, digital circuitry, and/or any device that manipulates signals (analog and/or digital) based on hard coding of the circuitry and/or operational instructions. The processing module **18**, **26**, **32** may have an associated memory and/or memory element, which may be a single memory device, a plurality of memory devices, and/or embedded circuitry of the processing module **18**, **26**, **32**. Such a memory device may be a read-only memory, random access memory, volatile memory, non-volatile memory, static memory, dynamic memory, flash memory, cache memory, and/or any device that stores digital information. Note that if the processing module **18**, **26**, **32** includes more than one processing device, the processing devices may be centrally located (e.g., directly coupled together via a wired and/or wireless bus structure) or may be distributedly located (e.g., cloud computing via indirect coupling via a local area network and/or a wide area network). Further note that when the processing module **18**, **26**, **32** implements one or more of its functions via a state machine, analog circuitry, digital circuitry, and/or logic circuitry, the memory and/or memory element storing the corresponding operational instructions may be embedded within, or external to, the circuitry comprising the state machine, analog circuitry, digital circuitry, and/or logic circuitry. Still further note that, the memory element stores, and the processing module **18**, **26**, **32** executes, hard coded and/or operational instructions corresponding to at least some of the steps and/or functions illustrated in FIGS. **1-28**.

The WP TX unit **10** communicates with the WP transceivers **24**, **30** of the devices **12-14** via one or more control channels **34** that use one or more frequencies in the ISM bands **36** and/or one or more frequencies in another non-licensed frequency band(s) **38**. The communication via the control channel **34** may use one or more standardized protocols **40**, **44** and/or one or more proprietary protocols **42**, **46**. For example, the standardized protocols **40**, **44** may include Bluetooth (2400 MHz), HIPERLAN (5800 MHz), IEEE 802.11 (2400 MHz and 5800MHz), and IEEE 802.15.4 (personal area networks using 915 MHz or 2400 MHz).

The ISM bands **36** include:

Frequency range	Center frequency
6.765-6.795 MHz	6.780 MHz
13.553-13.567 MHz	13.560 MHz
26.957-27.283 MHz	27.120 MHz
40.66-40.70 MHz	40.68 MHz
433.05-434.79 MHz	433.92 MHz
902-928 MHz	915 MHz
2.400-2.500 GHz	2.450 GHz
5.725-5.875 GHz	5.800 GHz
24-24.25 GHz	24.125 GHz
61-61.5 GHz	61.25 GHz
122-123 GHz	122.5 GHz
244-246 GHz	245 GHz

Each of the WP power transceivers **20**, **24**, **30** (e.g., in the WP TX unit **10** and in each of the devices **12-14**) includes baseband processing (which may be done by the corresponding processing module **18**, **26**, **32**), a radio frequency (RF) and/or a millimeter wave (MMW) transmitter section, and an RF and/or MMW receiver section. In an example of operation, the baseband processing converts outbound data into outbound symbol stream in accordance with one or more wireless communication standards (e.g., GSM, CDMA, WCDMA, HSUPA, HSDPA, WiMAX, EDGE, GPRS, IEEE 802.11, Bluetooth, ZigBee, universal mobile telecommunications system (UMTS), long term evolution (LTE), IEEE 802.16, evolution data optimized (EV-DO), proprietary protocol, etc.). Such a conversion includes one or more of: scrambling, puncturing, encoding, interleaving, constellation mapping, modulation, frequency spreading, frequency hopping, beamforming, space-time-block encoding, space-frequency-block encoding, frequency to time domain conversion, and/or digital baseband to intermediate frequency conversion.

The transmitter section converts the outbound symbol stream into an outbound RF signal that has a carrier frequency within a given frequency band (e.g., ISM bands **36**). In an embodiment, this may be done by mixing the outbound symbol stream with a local oscillation to produce an up-converted signal. One or more power amplifiers and/or power amplifier

drivers amplifies the up-converted signal, which may be RF bandpass filtered, to produce the outbound RF signal. In another embodiment, the transmitter section includes an oscillator that produces an oscillation. The outbound symbol stream provides phase information (e.g., +/−Δθ [phase shift] and/or θ(t) [phase modulation]) that adjusts the phase of the oscillation to produce a phase adjusted RF signal, which is transmitted as the outbound RF signal. In another embodiment, the outbound symbol stream includes amplitude information (e.g., A(t) [amplitude modulation]), which is used to adjust the amplitude of the phase adjusted RF signal to produce the outbound RF signal.

In yet another embodiment, the transmitter section includes an oscillator that produces an oscillation. The outbound symbol provides frequency information (e.g., +/−Δf [frequency shift] and/or f(t) [frequency modulation]) that adjusts the frequency of the oscillation to produce a frequency adjusted RF signal, which is transmitted as the outbound RF signal. In another embodiment, the outbound symbol stream includes amplitude information, which is used to adjust the amplitude of the frequency adjusted RF signal to produce the outbound RF signal. In a further embodiment, the transmitter section includes an oscillator that produces an oscillation. The outbound symbol provides amplitude information (e.g., +/−ΔA [amplitude shift] and/or A(t) [amplitude modulation) that adjusts the amplitude of the oscillation to produce the outbound RF signal.

The receiver section receives and amplifies an inbound RF signal to produce an amplified inbound RF signal. The receiver section may then mix in-phase (I) and quadrature (Q) components of the amplified inbound RF signal with in-phase and quadrature components of a local oscillation to produce a mixed I signal and a mixed Q signal. The mixed I and Q signals are combined to produce an inbound symbol stream. In this embodiment, the inbound symbol may include phase information (e.g., +/−Δθ [phase shift] and/or θ(t) [phase modulation]) and/or frequency information (e.g., +/−Δf [frequency shift] and/or f(t) [frequency modulation]). In another embodiment and/or in furtherance of the preceding embodiment, the inbound RF signal includes amplitude information (e.g., +/−ΔA [amplitude shift] and/or A(t) [amplitude modulation]). To recover the amplitude information, the receiver section includes an amplitude detector such as an envelope detector, a low pass filter, etc.

The baseband processing converts the inbound symbol stream into inbound data (e.g. control channel data) in accordance with one or more wireless communication standards (e.g., GSM, CDMA, WCDMA, HSUPA, HSDPA, WiMAX, EDGE, GPRS, IEEE 802.11, Bluetooth, ZigBee, universal mobile telecommunications system (UMTS), long term evolution (LTE), IEEE 802.16, evolution data optimized (EV-DO), proprietary protocol, etc.). Such a conversion may include one or more of: digital intermediate frequency to baseband conversion, time to frequency domain conversion, space-time-block decoding, space-frequency-block decoding, demodulation, frequency spread decoding, frequency hopping decoding, beamforming decoding, constellation demapping, deinterleaving, decoding, depuncturing, and/or descrambling.

The WP TX unit **10** communicates with the devices **12-14** via the control channel to facilitate efficient wireless power transfer from the WP TX unit **10** to the power RX circuit **22**, **28** of the devices **12-14**. For example, the communication may be to determine which frequency to use, to reposition the device **12-14** to improve magnetic coupling, to tune the components of the power TX circuit **16** and/or the power RX circuit **22**, **28**, to indicate desired power levels, to adjust power levels, etc. As such, during the wireless transfer of energy from the power TX circuit **16** to the power RX circuit **22**, **28** of one or more devices **12-14**, the WP TX unit **10** and the devices **12-14** communicate to provide a desired performance level of wireless energy transfer.

In another example of operation, the receive unit processing module **26**, **32** functions to identify the control channel protocol used by the wireless power transmit unit **10** for control channel communications. Note that the control channel includes one of a plurality of control channel protocols that includes at least one or more standard control channel protocols and/or one or more proprietary control channel protocols. Further note that the transmit unit transceiver **20** uses one of the control channel protocols and is capable of using a subset of the plurality of control channel protocols. For instance, one transmit unit transceiver **20** may use a Bluetooth protocol or a proprietary protocol for its control channel protocol, while another transmit unit transceiver **20** of another wireless power transmit unit **10** may use a different control channel protocol. As such, the receive unit needs to identify the control channel protocol.

The receive unit processing module **26**, **32** may identify the control channel protocol by interpreting a beacon signal transmitted by the transmit unit transceiver to determine the control channel protocol. Alternatively, or in addition to the preceding example, the receive unit processing module **26**, **32** may identify the control channel protocol by receiving a set-up communication from the transmit unit transceiver **20** using a default control channel protocol. As another alternative, or in addition to one or more of the preceding examples, the receive unit processing module **26**, **32** may identify the control channel protocol by scanning a frequency spectrum for control channel activity to produce scanned frequency spectrum and identify the control channel protocol from the scanned frequency spectrum. As yet another alternative, or in addition to one or more of the preceding examples, the receive unit processing module **26**, **32** may identify the control channel protocol by evoking a trial and error system using known control channel protocols.

When the receive unit processing module **26**, **32** identifies the control channel protocol, it determines whether the receive unit transceiver is capable of communication using the control channel protocol. For example, the processing module is determining whether the receive unit transceiver **24**, **30** be configured to support the control channel protocol. When the receive unit transceiver **24**, **30** is capable of communication using the control channel protocol, the processing module coordinates configuration of the receive unit transceiver to transceive the communication regarding the wireless power magnetic field via the control channel. Configuring of the receive unit transceiver **24**, **30** is discussed in greater detail with reference to FIG. **6**.

As yet another alternative to identifying the control channel protocol, the transmit unit transceiver **20** and the receive unit transceiver **24**, **30** may negotiate which control channel protocol to use. For example, the transmit unit transceiver may transceive negotiation information (e.g., what protocols they each support, desired data rate, available bandwidth, etc.) with the receive unit transceiver to mutually select the control channel protocol.

If the processing module **26**, **32** cannot identify the control channel or the receive unit transceiver **24**, **30** is not capable of being configured to use the control channel protocol, the processing module determines whether the receive unit transceiver is lacking hardware or lacking software to support the control channel protocol. When the receive unit transceiver is lacking software, the processing module generates a network

message to download the software to support the control channel protocol. Once the software is downloaded, the receive unit transceiver **24**, **30** is configured to support the control channel protocol.

With the control channel established between the wireless power transmit unit **10** and the device **12**, **14**, the wireless power transmit circuit **16** generates a wireless power magnetic field in accordance with the control channel data (e.g., power level, frequency, tuning, etc.). The wireless power receive circuit **22**, **28** converts the wireless power magnetic field into a voltage, which may be used to charge a battery of the device and/or to power at least a portion of the device **12**, **14**.

FIG. **2** is a schematic block diagram of another embodiment of a wireless power system that includes a wireless power (WP) transmit (TX) unit **10** and one or more devices. The WP TX unit **10** includes a processing module **18**, a WP transceiver **20**, an RFID (radio frequency identification) tag and/or reader **48**, and a power TX circuit **16**. Each device **12-14** includes a WP receive (RX) circuit **24**, **28**, a processing module **26**, **32**, an RFID tag and/or reader **50**, **52**, and a WP transceiver **24**, **30**. The device **12-14** will most likely include a plurality of other components depending on its desired functionality. For example, the device may be a cell phone, a personal audio/video player, a video game unit, a toy, etc. and it includes the corresponding circuitry.

In this embodiment, the RFID tags **48**, **50**, **52** include information regarding the wireless power requirements and capabilities of the devices **12-14** and of the WP TX unit **10**. For instance, the information may include the communication protocol to use (e.g., one or more of the standardized protocols **40**, **44** or one or more of the proprietary protocols **42**, **46**), the wireless power frequency spectrum, impedance matching information, battery charging requirements, etc. The RFID readers and tags **48**, **50**, **52** may be active or passive devices and may use backscattering to communicate. As such, the devices **12-14** initially communicate with the WP TX unit **10** to exchange set up information and, once set up, the devices **12-14** communicate with the WP TX unit **10** via the WP transceivers **20**, **24**, **30**.

FIG. **3** is a schematic block diagram of another embodiment of a wireless power system that includes a wireless power (WP) transmit (TX) unit **10** and one or more devices **12-14**. The WP TX unit **10** includes a processing module **18**, an RFID (radio frequency identification) tag and/or reader **48**, and a power TX circuit **16**. Each device **12-14** includes a WP receive (RX) circuit **22**, **28**, a processing module **26**, **32**, and an RFID tag and/or reader **50**, **52**. The device **12-14** will most likely include a plurality of other components depending on its desired functionality. For example, the device may be a cell phone, a personal audio/video player, a video game unit, a toy, etc. and it includes the corresponding circuitry.

In this embodiment, the RFID tags **48**, **50**, **52** include information regarding the wireless power requirements and capabilities of the devices **12-14** and of the WP TX unit **10**. For instance, the information may include the communication protocol to use (e.g., one or more of the standardized protocols **54** or one or more of the proprietary protocols **56**), the wireless power frequency spectrum, impedance matching information, battery charging requirements, etc. In addition to exchanging set up information, the WP TX unit **10** and the devices **12-14** use the RFID tags and readers **48**, **50**, **52** as the primary communication means between them. Note that the RFID readers and tags **48**, **50**, **52** may be active or passive devices and may use backscattering to communicate.

FIG. **4** is a schematic block diagram of another embodiment of a wireless power system that includes the WP TX unit **10** and a device **58**. The device **58** includes the power receiver circuit **62**, a battery charger **64**, a battery **66**, a DC-to-DC converter **68**, the processing module **70**, memory **72**, a plurality of input/output (I/O) modules **74**, a plurality of circuit modules **76-78**, a clock generation unit **80**, and a power management unit **82**. Note that the device **58** may be one of the devices **12-14** of FIGS. **1-3**.

In an example of operation, after the WP TX unit **10** and the device **58** have established communication, the WP TX unit **10** generates a magnetic field that is received by the power receiver circuit **62**, which is integrated into device **58**. This will be discussed in greater detail with reference to one or more of the subsequent figures. The power receiver circuit **62** generates an AC voltage from the magnetic field, rectifies the AC voltage to produce a rectified voltage, and filters to the rectified voltage to produce a DC voltage rail (e.g., V+ and V−). The power receiver circuit **62** may be tuned based on control signals provided by the processing module **70**. The tuning includes adjusting one or more electromagnetic properties, such as the quality factor of the circuit, adjusting impedance, current limiting, etc., of the magnetic field and/or the wireless power receiver circuit **62**.

The battery charger **64** converts the DC voltage rail into a battery charge voltage, which it provides to the battery **66**. The battery charger **64** monitors the charging to insure proper charging in accordance with the type of battery and, once the battery **66** is charged, may implement a trickle charge. Note that the processing module **70** may provide control signals to the battery charger **64** to regulate the charging in accordance with the type of battery.

The DC-to-DC converter **68** converts the battery voltage (e.g., 1.5 volts, 4.2 volts, etc.) into one or more supply voltages (e.g., 1 volt, 2.2 volts, 3.3 volts, 5 volts, 12 volts, etc.). The DC-to-DC converter **68** provides the supply voltages to one or more of the other modules **70**, **72**, **74**, **76**, **78**, **80** under the direction of the power management module **82**. In general, the power management module **82** functions to control power consumption by the device **58** to an optimal level (e.g., balancing of performance and battery life). In this regard, the power management module **82** may treat each module **70**, **72**, **74**, **76**, **78**, **80** as a separate power island that can be individually controlled. For example, when a circuit module **76-78** is inactive, the power management module **82** may remove power from the circuit module **76-78**. As another example, the power management module **82** may reduce the voltage provided to a circuit module **76-78** when the circuit module **76-78** does not need to operate at its maximum potential.

In addition to controlling the supply voltage to each power island, the power management module **82** may control the clock signals provided to each circuit module **76-78** that uses a clock signal. For example, when a circuit is idle, the power management module **82** may provide a reduced supply voltage to the circuit module **76-78**, but disable the clock signal provided to the circuit module **76-78**. In this way, minimal power is consumed, but the circuit module **76-78** may be quickly activated when it is needed. As another example, the power management module **82** may reduce the frequency of a clock signal for a circuit module **76-78** when the circuit module **76-78** does not need to operate at its maximum potential.

The plurality of circuit modules **76-78** provides at least some of the functionality for the device **58**. For example, if the device is a cell phone, the circuit modules **76-78** may provide a digital image capture function, a digital image display function, an audio file playback function, a data messaging function, a voice call function, etc. The plurality of input/output (I/O) modules **74** provides the interface to the user input/

output components (e.g., speaker, microphone, display, buttons, etc.) of the device **58**. For example, a circuit module may generate outbound data (e.g., a captured digital image). The processing module processes the outbound data to produce processed data (e.g., generates a digital image file) and provides the processed outbound data to an input/output module for display on a peripheral output component (e.g., an LCD display). As another example, an input/output module may receive inbound data (e.g., a place call command) from a peripheral input component (e.g., keypad of the device) and provide it to the processing module. The processing module processes the inbound data to produce processed inbound data (e.g., retrieve the phone number of the target identified in the call command). The processing module provides the processed inbound data to a circuit module, which performs a function on the processed inbound data (e.g., places the call to the target).

FIG. **5** is a schematic block diagram of an embodiment of a portion of a wireless power system that includes the power transmitter circuit **84** and the power receiver circuit **86**. The power transmitter circuit **84** includes a coil (i.e., an inductor), a rectify and regulate circuit **88**, an impedance matching and excitation circuit **90**, a processing module **92**, and an RF and/or MMW transceiver **94**. The power receiver circuit **86** includes a coil, an impedance matching and rectify circuit **96**, a regulate circuit **98**, and an RF and/or MMW transceiver **100**. The power receiver circuit **86** is coupled to the battery charger **104** and the processing module **102**. In this regard, the power receiver circuit **84** is readily integrated into the device and uses components of the device (e.g., the processing module **102**). As such, the power receiver circuit **86** is not a standalone component coupled to the device, but an integral part of the device. Note that the device **12**,**14**, **58** will typically include a housing, which houses the power receiver circuit **86**, the battery charger **104**, the battery **106**, and the RF/MMW transceiver **100**, the processing module **102**, and the components as shown in FIG. **4**.

In an example of operation, the rectify and regulate circuit of the power transceiver circuit **84** converts an AC voltage (e.g., 110 VAC, 220 VAC, etc.) into a DC voltage (e.g., 160 VDC, 320 VDC, etc.). The impedance matching and excitation circuit **90** couple the TX power coil to the DC voltage in an alternating pattern (e.g., a full bridge inverter, a half bridge inverter) at a given frequency (e.g., 10 MHz, etc.). The impedance matching allows the LC circuit of the capacitor and coil to be tuned to a desired resonant frequency and to have a desired quality factor. For example, the LC circuit may be tuned to resonant at the excitation rate.

The coil of the power RX **86** unit is proximal to the coil of the TX unit **84** to receive the magnetic field created by the TX coil and to create an AC voltage therefrom. The LC circuit of the RX coil and capacitor may be tuned to have a desired resonance and/or a desired quality factor. The impedance matching and rectify circuit **96** rectifies the AC voltage of the RX coil to produce a DC rail voltage that is regulated via the regulation circuit. The remainder of the diagram functions as previously discussed and/or as will be subsequently discussed.

FIG. **6** is a schematic block diagram of an embodiment of a wirelessly powered device **108** that includes the power RX circuit **110**, an RF and/or MMW data processing module **112** (which may be implemented within the processing module) and the RF and/or MMW transceiver **114**. The RF and/or MMW data processing module **112** includes an outbound symbol conversion module **116**, a baseband control module **118**, a transceiver control module **120**, and an inbound symbol conversion module **122**. The RF and/or MMW transceiver **114** includes a transmitter **124** and a receiver **126**. The transmitter **124** includes a low IF (e.g., 0 to a few MHz) bandpass filter **128**, a mixing module **130**, a power amplifier (PA) **132**, and an RF bandpass filter **134**. The receiver **126** includes an RF bandpass filter **136**, a low noise amplifier (LNA) **138**, a mixing module **140**, and a low IF bandpass filter **142**. If the transmitter **124** and receiver **126** share an antenna, the transceiver **114** further includes a TX/RX isolation circuit **144** (e.g., a circulator, a transformer balun, a TX/RX switch, etc.).

In an example of operation, the data processing module **112** configures itself based on the communication protocol being implemented and the corresponding data modulation. In addition, the transceiver control module provides control signals to the transceiver **114** to adjust one or more of the components thereof based on the protocol being implemented. In this regard, the data processing module **112** and the transceiver **114** may be configured to implement one or more of the standard communication protocols and/or one or more of the proprietary communication protocols. Note that the device **108** may include one or more configurable RF/MMW data processing modules **112** and/or one or more configurable RF/MMW transceivers **114**.

FIG. **7** is a schematic block diagram of an embodiment of a portion of a wireless power system that includes the power transmitter circuit **144** and the power receiver circuit **146**. The power transmitter circuit **144** includes a rectify and regulate circuit **148**, an impedance matching and excitation circuit **150**, a processing module **152**, an NFC modulator/demodulator **154**, and an NFC coil **156**. The power receiver circuit **146** includes an impedance matching and rectify circuit **158**, a regulate circuit **160**, an NFC modulator/demodulator **162**, and an NFC coil **164**. The power receiver circuit **146** is coupled to the battery charger (not shown in figure) and the processing module **166**.

In an example of operation, the rectify and regulate circuit **148** of the power transmitter circuit **144** converts an AC voltage (e.g., 110 VAC, 220 VAC, etc.) into a DC voltage (e.g., 160 VDC, 320 VDC, etc.). The impedance matching and excitation circuit **150** couple the TX power coil to the DC voltage in an alternating pattern (e.g., a full bridge inverter, a half bridge inverter) at a given frequency (e.g., 10 MHz, etc.). The impedance matching allows the LC circuit of the capacitor and coil to be tuned to a desired resonant frequency and to have a desired quality factor. For example, the LC circuit may be tuned to resonant at the excitation rate.

The coil of the power receiver circuit **146** is proximal to the coil of the transmitter circuit **144** to receive the magnetic field created by the TX coil and to create an AC voltage therefrom. The LC circuit of the RX coil and capacitor may be tuned to have a desired resonance and/or a desired quality factor. The impedance matching and rectify circuit **158** rectifies the AC voltage of the RX coil to produce a DC rail voltage that is regulated via the regulation circuit **160**.

The device communicates to the power transmitter circuit **144** via NFC (near field communication) **170**. For example, when the device has data to convey to the power transmitter circuit **144**, the processing module **166** generates the data, which it provides to the NFC modulator/demodulator **162**. The NFC mod/demodulator **162** modulates the data at a given frequency (e.g., 13 MHz, 900 MHz, etc.) that drives the NFC coil **164**. The NFC coil **164** creates a magnetic field that is received by the NFC coil **156** of the power transmitter circuit **144**. The NFC mod/demod unit **154** demodulates the signal produced by the NFC coil **156** to recover the transmitted data, which is provided to the processing module **152**. Data from the power transmitter circuit **144** to the device is processed in a similar manner.

FIG. **8** is a schematic block diagram of another embodiment of a portion of a wireless power system that includes the power transmitter circuit **172** and the power receiver circuit **174**. The power transmitter circuit **172** includes a rectify and regulate circuit **176**, an impedance matching and excitation circuit **178**, a processing module **190**, an NFC modulator/demodulator **188**, **200**, and a share WP & NFC coil **202**. The power receiver circuit **174** includes an impedance matching and rectify circuit **204**, a regulate circuit **206**, an NFC modulator/demodulator **216**, **220**, and an NFC coil **222**. The power receiver circuit **174** is coupled to the battery charger (not shown in figure) and the processing module **218**.

In an example of operation, the rectify and regulate circuit **176** of the power transmitter circuit **172** converts an AC voltage (e.g., 110 VAC, 220 VAC, etc.) into a DC voltage (e.g., 160 VDC, 320 VDC, etc.). The impedance matching and excitation circuit **178** couple the TX power coil **202** to the DC voltage in an alternating pattern (e.g., a full bridge inverter, a half bridge inverter) at a given frequency (e.g., 10 MHz, etc.). The impedance matching allows the LC circuit of the capacitor and coil to be tuned to a desired resonant frequency and to have a desired quality factor. For example, the LC circuit may be tuned to resonant at the excitation rate.

The coil **202** of the power receiver circuit **174** is proximal to the coil **222** of the power transmitter circuit **172** to receive the magnetic field created by the TX coil **202** and to create an AC voltage therefrom. The LC circuit of the RX coil **222** and capacitor may be tuned to have a desired resonance and/or a desired quality factor. The impedance matching and rectify circuit **204** rectifies the AC voltage of the RX coil **222** to produce a DC rail voltage that is regulated via the regulation circuit.

The device communicates with the WP TX unit via NFC (near field communication) using the shared WP & NFC coils **202**, **222**. For example, when the device has data to convey to the WP TX unit, the processing module **218** generates the data, which it provides the NFC data modulator **216**. The NFC modulator **216** modulates the data at a given frequency (e.g., 13 MHz, 900 MHz, etc.) to produce an amplitude component (A(t)) **212** and a phase component (Φ(t)) **214**. The phase component **214** adjusts the phase of an oscillation (cos ω(t)) to produce a phase adjusted oscillation (cos(ω(t)+Φ(t))) **210**. The power amplifier **208** amplifies the phase adjusted oscillation **210** by the amplitude component **212** to produce an amplitude modulated and phase adjusted signal (A(t)cos (ω(t)+Φ(t))). The signal is AC coupled to the shared WP & NFC coil **222** for conveyance to the WP TX unit.

The shared coil **202** of the WP TX unit receives the signal (e.g., A_0 cos(ω_0(t))*A(t)cos(ω(t)+Φ(t)), where A_0 is the amplitude of the WP signal and ω_0 corresponds to the frequency of the WP signal). The NFC signal component is AC coupled to the data demodulator **200** and the WP component is provided to the impedance matching circuit **178**. The data demodulator **200** recovers the data from the amplitude component **186** and the phase component **184** and provides the data to the processing module **190**.

FIG. **9** is a schematic block diagram of another embodiment of a wireless power system that includes the WP TX unit **226** and a device **228**. The device **228** includes the WP coil **230**, the power RX circuit **232**, the battery charger **234**, the battery **236**, a multiplexer **238** or the like, the DC-to-DC converter **240**, the processing module **242**, the IO interface modules **244**, the memory **246**, the power management unit **248**, an NFC power recovery module **252**, and/or an RF/MMW power recovery module **250**.

In an example of operation, when the battery **236** is dead or near dead and as insufficient power to power minimal circuitry to facilitate battery charging, the NFC power recovery module **252** and/or RF/MMW power recovery module **250** generate an emergency voltage to provide the energy to initiate battery charging. Once energy is being received from the WP TX unit **226**, the emergency supply generators may be disabled and the supply voltage V**1** may be used to power the device **228** during charging and/or after charging is complete (i.e., in a trickle charge mode). Note that as long as WP energy is being received, the device **228** may be powered by V**1** or another voltage derived from the WP energy.

FIG. **10** is a schematic block diagram of another embodiment of a wirelessly powered device **254** that includes the processing module **256**, the rectify and impedance matching circuit (e.g., capacitors and diodes) **258**, the RX coil **260**, a buck &/or boost converter **262**, a trickle charge circuit **264**, a battery **266**, and a battery current sensor **268**. The processing module **256** implements a battery charger controller **270**, a boost controller **272**, a buck controller **274**, an impedance matching control **280**, and an RF/MMW and/or NFC data processing module **276**. The processing module **256** may further implement the power management unit **282**. Note that the processing module **256** may be fabricated on a single integrated circuit or on a multiple integrated circuit with one or more of the components of the converter **262**, the rectifier circuit **258**, the trickle charge circuit **264**, and/or the battery current sense **268**.

In an example of operation, the RX coil **260** (which may include one or more adjustable inductors) receives a magnetic field from the WP TX unit and creates an AC voltage therefrom. The adjustable capacitor is tuned (alone in conjunction with the RX coil **260**) to a desired resonance, impedance, and/or quality factor to facilitate the creation of the AC voltage. The full bridge rectifier (e.g., the diodes) rectify the AC voltage to produce a rectified voltage that is filtered by the capacitor to produce a DC rail voltage (e.g., 3-20 volts).

The buck and/or boost converter **262** is enabled in a buck converter mode when the DC voltage rail is to be stepped down to produce battery charge voltage (and the supply voltage Vdd for the device) and is enabled in boost converter mode when the DC rail voltage is to be stepped up to produce the battery charge voltage (and the supply voltage Vdd). Note that when the buck and/or boost converter **262** is in the boost mode, the buck transistor is enabled. Further note that the buck and/or boost converter **262** may include multiple inductors, transistors, diodes, and capacitors to produce multiple supply voltages.

When the battery **266** is charging, the battery charge control module **270** monitors the battery current and voltage to insure charging is in accordance with the charging requirements of the battery **266**. When the battery **266** is charged, the battery **266** is disconnected from the converter **262** (which may be disabled or enabled to provide Vdd) and the battery **266** may be trickle charged. Note that when the WP is lost, the battery **266** is coupled to provide the power for the device **254**.

FIG. **11** is an example state diagram of a processing module of a wirelessly powered device **12-14**, **58** that includes six states **286**: idle **284**, charge set up **288**, charge **290**, trickle charge **292**, WP operated—power management **294**, and battery operated—power management **296**. The device starts in the idle state **284** and waits to detect the WP TX unit, WP operation enablement, or battery operation enablement. The device may be in one of the charge states **286** and the WP operated—power management state **294** concurrently.

When the device detects the WP TX unit (e.g., via RFID communication, via control channel communication, via sensing a magnetic field, etc.), the device transitions from the idle state **284** to the charge set up state **288**. When in the

charge set up state **288**, the device functions as referenced in FIGS. **12** and/or **13**, which will be subsequently discussed. The device transitions back to the idle state **284** if the set up failed, which may result from failing to establish a control channel communication, the WP TX unit not being able to currently service the device, circuit damage, a bad battery, or loss of connection.

The device transitions to the charge state **290** when the charge set up is complete. While in the charge state **290**, the device functions as referenced in FIGS. **14** and/or **15**, which will be subsequently discussed. The device transitions to the idle state **284** if the charging failed or the charging is complete and the battery does not require a trickle charge. If the charging is complete and the battery will be trickled charge, the device transitions to the trickle charge state **292**. The device stays in this state until a failure occurs (e.g., loss of connection with the WP TX unit) or until the trickle charge is complete. In either event, the device transitions back to the idle state **284**.

When the device is enabled for operation, the device transitions to the WP operated—power manage state **294** when the device is enabled and is connected to the WP TX unit. While in this state, the device functions as referenced in FIG. **16**, which will be subsequently discussed. The device transitions back to the idle state **284** when the device is disabled (e.g., turned off, placed in a sleep mode, etc.). Note that while the device is in this state, it may also be in one of the charge states.

The device transitions from the WP operated state **294** to the battery operated—power manage state **296** when the device is disconnected from the WP TX unit. The device may also enter the battery-operated state **296** from the idle state **284** when the device is enabled and not connected to the WP TX unit. While in this state, the device functions as referenced in FIG. **17**, which will be subsequently discussed. The device transitions back to the WP operated state **294** when the device is again connected to the WP TX unit. The device transitions back to the idle state **284** when the device is disabled (e.g., turned off, sleep mode, low battery, etc.).

In an embodiment, the device may include an integrated circuit (IC) that includes at least a portion of a wireless power receiver circuit **86** (e.g., an on-chip coil, an on-chip variable capacitor, components of the impedance matching & rectify circuit **96** (diodes of the rectify circuit may be off-chip), and components of the regulation circuit **98**), a transceiver, and a processing module. The wireless power receiver circuit converts the electromagnetic signal into a voltage and the transceiver, when operable, transceives a control channel communication.

The processing module is operable to transition the device from an idle state to a charge state when a wireless power transmitter unit is detected. The processing module is further operable to transition the device from the idle state to a wireless power operated state when a wireless power transmit circuit is detected and the device is enabled. The processing module is still further operable to transition the device from the idle state to a battery operated state when the device is enabled and the wireless power transmit circuit is not detected.

Alternatively, or in addition to the above, the processing module may be operable to detect availability of the wireless power transmitter unit via the control channel communication. The processing module may then, when the wireless power transmitter unit is available, determine battery charging needs and whether the device is active. The processing module may then, when the battery charging needs compares unfavorable to a threshold, initiate battery charging using the voltage. The processing may, when the device is active, enable wireless power operation and, when the wireless power transmitter is not available, enable battery operated mode for the device.

FIG. **12** is a logic diagram of an embodiment of a method for a charge set up state **298** that begins with the device working with the WP TX unit to select a standardized communication protocol **300**. Examples of the communication protocols were presented with reference to FIGS. **1-3**. Note this step may begin by assuming a default communication protocol (e.g., RFID, Bluetooth, etc.) to initiate communication and then, once communication is established, selecting another communication protocol. The method continues with the device determining whether the device is synchronized via a control channel with the WP TX unit **302**. In other words, is a usable control channel established between the device and the WP TX unit? If yes, the method continues with the device establishing a control channel communication with the WP TX unit **304** and exiting the state **306**.

If a control channel is not established, the method continues with the device determining whether it has exhausted its standardized communication protocols **308** (e.g., the ones it is capable of executing). If not, the process repeats with the device selecting another standardized protocol **300**. If the standardized protocols are exhausted, the method continues with the device selecting a proprietary communication protocol **310**. Note that the method may begin with proprietary protocols and if they are exhausted, then try standardized protocols. Further note that there may be no distinction between a standard protocol and a proprietary protocol such that the method attempts to find a usable protocol regardless of whether it is a standard or proprietary protocol.

The method continues with the device determining whether the device is synchronized via a control channel with the WP TX unit using the proprietary protocol **312**. If yes, the method continues with the device establishing a control channel communication with the WP TX unit **314** using the proprietary protocol and exiting the state **318**.

If a control channel is not established using a proprietary protocol, the method continues with the device determining whether it has exhausted its proprietary communication protocols **316** (e.g., the ones it is capable of executing). If not, the process repeats with the device selecting another proprietary protocol **310**. If the proprietary protocols are exhausted, the method continues with the device exiting this state due to a failure **318**.

FIG. **13** is a logic diagram of another embodiment of a method for a charge set up state **320** that begins with the device reading an RFID tag of the WP TX unit **322** to determine a desired control channel protocol. The method continues with the device determining whether it is capable of executing the desired control channel protocol **324**. If yes, the method continues with the device establishing a control channel communication with the WP TX unit **326** and exiting the state **328**.

If the device does not have the desired control channel protocol, the method continues with the device determining whether it includes the hardware to support the desired control channel protocol **330**. For example, does it include the NFC circuitry, the RF circuitry, and/or the MMW circuitry to support the operating frequency, power requirements, transmission range, etc. of the desired control channel protocol. If yes, then the device is lacking the desired control channel protocol software and the method continues with the device downloading the software for the desired control channel protocol **332**. After the device has the software, the method

continues with the device establishing a control channel communication with the WP TX unit **326**.

If the device does not have the hardware to support the desired control channel protocol, the method continues with the device determining whether it can use RFID as the control channel protocol with the WP TX unit **334**. In an embodiment, the device requests that they use RFID, if the WP TX unit agrees, then the method continues with the device using RFID for the control channel with the WP TX unit **336**. If the device cannot use RFID for the control channel, then the device exits the state due to a failure **338**.

FIG. **14** is a logic diagram of an embodiment of a method for a charge state **340** that begins with the device determining the level of its battery **342** (e.g., the battery life left based on the battery type, the power demands of the device, etc.). The method continues with the device determining if the battery needs charging **344-346**. For example, has the power capacity of the battery been drained below a threshold, which may be based on battery life, not being fully charged, and/or some other criteria.

The method branches back to the beginning if the battery does not need charging and branches to the next step if it does. At the next step, the device communicates with the WP TX unit to determine one or more of: impedance matching settings, operating frequency, power level, number of coils, etc **348**. The method continues with the device determining whether it needs to adjust one or more of the impedance of its power RX circuit, the operating frequency of the power RX circuit, the power level, etc. and making the appropriate adjustments as needed **350**.

The method continues with the device setting charging parameters **352** (e.g., Vdd, current limits, trickle level, charge time intervals, etc.). The method continues with the device charging the battery and monitoring the charging **354** (e.g., the charging current and/or the charging voltage). The device also determines whether it is still in range of the WP TX unit **356**. If so, the method continues with the device determining whether the charging is complete **358**. If not, the process continues by setting (i.e., adjusting if needed in subsequent repetitions of the loop) the charging parameters **348**. If the device is out of range, the method continues with the device exiting this state due to a failure **360**. The device also exits this state **360** if the battery is charged.

FIG. **15** is a diagram of an example of a graph of charge need versus charge efficiency that may be used by the device to determine whether charging is needed as mentioned in the logic diagram of FIG. **14**. As can be inferred by the diagram of FIG. **15**, the determination of whether charging is needed is a sliding scale that varies based on battery life and charging efficiency. As such, when the battery life is high, don't charge the battery unless it can be done efficiently. As the battery life diminishes, the need to charge it is greater, which, at some point, outweighs the desired for the charging to be done efficiently.

FIG. **16** is a logic diagram of an embodiment of a method for a wirelessly powered power management state **362** that begins with the device determining whether the battery needs charging **364**. If not, the method continues with the device disconnecting the battery from the charger **366**. The device may engage a trickle charge if desired or required per the battery charging requirements. The method continues with the device determining the activation status of the circuit modules **368** (e.g., disabled, active, idle, etc.). The method continues with the device determining clock signals for the active circuit modules **370** (e.g., select clock rate to just meet operational needs, which will typically be less than a maximum clock rate).

The method continues with the device determining supply voltages for the active and idle circuit modules **372**. For example, the device may set the power levels for idle circuit modules at a level to provide just enough energy to determine whether the circuit module is to remain in the idle state or transition into an active state. As another example, the device may set the power level for active circuits modules to a level just sufficient enough for the circuit module to perform its task, which will typically be less than a maximum power level.

The method continues with the device enabling the clock signals for the active circuits and providing the selected power levels to the active and idle circuit modules **374**. The method continues with the device determining whether it is still connected to the WP TX unit **376**. If yes, the method repeats from the beginning. If not, the method continues with the device exiting the state **378**. Note that in this state, power management of the device is a less critical task than when the device is battery operated. As such, the setting of the clock signal rates and power levels may be set near maximum values to enhance performance.

FIG. **17** is a logic diagram of an embodiment of a method for a battery powered power management state **380** that begins with the device disconnecting the battery from the charger and connecting it as the primary power source **382**. The method continues with the device determining activation status of the circuit modules **384** (e.g., disabled, active, idle, etc.). The method continues with the device determining, for each active circuit module, a minimum acceptable clock signal and a minimum acceptable supply voltage **386** (e.g., Vdd).

The method continues with the device enabling generation of the minimum acceptable clock signals by the clock generator and the minimum acceptable supply voltages by the converter **388**. The method continues with the device determining, for each idle circuit module, a minimum acceptable idle supply voltage and no clock signal **390**. The method continues with the device enabling generation of the idle supply voltage by the converter **392**. The method continues with the device determining whether it is still in the battery mode **394**. If yes, the method repeats. If not, the device exits this state **396**.

FIG. **18** is a schematic block diagram of an embodiment of a wireless power computer system that includes a computer **600**, a wireless keyboard **602**, a wireless mouse **604**, a cell phone **606**, a personal audio/video (A/V) player **608**, an external hard drive **610**, and potentially other peripheral computer devices (e.g., joy stick, touch pad, track ball, speakers, etc.). The computer **600** may be a laptop, a panel display computer (e.g., a tablet), a conventional computer, etc. and includes a wireless power module.

In this embodiment, the computer **600** is powered wirelessly via the power transmitter circuit **612** (i.e., a WP TX unit) and provides wireless power to the peripheral components (e.g., keyboard **602**, mouse **604**, cell phone **606**, personal AV player **608**, hard drive **610**, etc.). The peripheral devices **602-610** may be wirelessly powered concurrently from the computer **600** and/or sequentially. Each of the peripheral devices **602-610** wirelessly communicates with the computer **600** using conventional wireless communication protocols (e.g., Bluetooth) and/or uses the WP control channel.

While FIG. **18** illustrates a computer system, the concepts apply to a more generic system. For example, a wireless power system may include a primary device (e.g., computer, television, monitor, cable set-top box, satellite set-top box, home electronic appliance, etc.) and at least one peripheral device (e.g., the peripheral devices of FIG. **35**, audio and/or

video entertainment components, remote controllers, etc.). The primary device includes a power conversion unit, a functional module, and a transceiver. The peripheral device includes a wireless power receiver, a peripheral unit, and a transceiver.

Within the primary device, the power conversion unit converts a power source into an electromagnetic signal. For example, the power conversion unit may include a power supply and a wireless power transmitter circuit. The power supply converts the power source (e.g., an AC voltage) into an output DC voltage. The wireless power transmitter circuit converts the output DC voltage into the electromagnetic signal. As another example, the power conversion unit includes a wireless power receiver circuit and a power conversion transmit circuit. The wireless power receiver circuit converts the power source (e.g., an input electromagnetic signal) into a supply voltage. The power conversion transmit circuit converts the supply voltage into the electromagnetic signal. In the latter example, the input electromagnetic signal may have a first frequency and the electromagnetic signal may have a second frequency to minimize interference therebetween.

The functional module of the primary device executes a function regarding peripheral information (e.g., communication protocol for the conveyance of the peripheral information, input data from the peripheral device, an input command from the peripheral device, output data for the peripheral device, and/or an output command for the peripheral device). For example, if the functional module is a central processing unit and the peripheral device is a user input device (e.g., touch screen, keypad, mouse, keyboard, etc.), the user input device may generate data and/or a command for execution by the central processing unit. As another example, if the functional module is memory and the peripheral device is a user output device, the memory provides data to the user output device for display (e.g., audible and/or visual).

The transceiver of the primary device communicates information regarding the electromagnetic signal with the transceiver of the peripheral device. The information regarding the electromagnetic signal includes control channel protocol, frequency of the electromagnetic signal, impedance matching parameters, resonant frequency tuning parameters, and/or other electromagnetic properties discussed herein.

The transceiver of the primary device also communicates the peripheral information with the transceiver of the peripheral device. In this regard, the transceivers are used for wireless power control channel communication and for peripheral device functional (e.g., data and/or commands) communication.

In addition to including a power conversion unit, a functional module, and a transceiver, the primary device may further include a battery, a battery charger, and a processing module. The battery charger utilizes the supply voltage to charge the primary battery as discussed with reference to one or more of the figures. The processing module coordinates the charging of the battery, the communicating the information regarding the electromagnetic signal, and the communicating the peripheral information.

The wireless power receiver circuit of the peripheral device converts the electromagnetic signal into a voltage as discussed with reference to one or more of the figures. The peripheral unit of the peripheral device processes the peripheral information. For example, the peripheral unit may generate input data for the primary device, wherein the peripheral information includes the input data. As another example, the peripheral unit may generate an input command for the primary device, wherein the peripheral information includes the input command. As another example, the peripheral unit may perform a function on output data from the primary device, wherein the peripheral information includes the output data. As another example, the peripheral unit may perform a function in accordance with an output command from the primary device, wherein the peripheral information includes the output command.

In addition to including a wireless power receiver, a peripheral unit, and a transceiver, the peripheral device may further include a battery, a battery charger, and a processing module. The battery charger utilizes the supply voltage to charge the peripheral battery. The processing module coordinates the charging of the battery, the communicating the information regarding the electromagnetic signal, and the communicating the peripheral information.

The primary device and/or the peripheral device may include an integrated circuit (IC) to support the above-described functions. For example, an IC may include at least a portion of the wireless power receiver circuit (e.g., one or more of the coil, capacitor, and diodes of the rectifying circuit may be off-chip), at least a portion of the battery charger (e.g., one or more of the switching transistors, the output filter capacitor, the inductor may be off-chip), the transceiver, and the processing module.

FIG. **19** is a schematic block diagram of an embodiment of power modules (e.g., computer power module **616** and peripheral device power module **614**) within a wireless power computer system. The computer power module **616** includes a wireless transceiver **620**, a power receiver circuit **622**, a battery charger **624**, a battery **626**, a power conversion transmit (TX) circuit **628**, a processing module **630**, and memory **632**. The peripheral device power module **614** includes a wireless transceiver **634** a power receive circuit (RX ckt) **636**, a battery charger **638**, and a battery **640**.

In an example of operation, the power transmit circuit **618** generates a magnetic field that is received by the power receiver circuit **622** of the computer power module **616** to facilitate a wireless power transference. The power receiver circuit **622** generates a DC rail voltage in accordance with control signals provided by the processing module **630**. The battery charger **624** converts the DC rail voltage into a battery charge voltage, which is supplied to the battery **626**. The power conversion TX circuit **628** generates a magnetic field that is magnetically coupled to the power RX circuit **636** of the peripheral device power module **614**. The power conversion TX circuit **628** may be sourced by the DC rail voltage when the computer power module **616** is proximal to the power transmitter circuit **618** or the battery **626** when the computer power module **616** is not proximal to the power transmitter circuit **618**.

The power RX circuit of the peripheral device power module **636** generates a DC rail voltage from the magnetic field of the power conversion TX circuit **628**. The battery charger **624** converts the DC rail voltage into a battery charger voltage, which is provided to the battery **626**. The computer power module **616** communicates with the peripheral device power module **614** via the wireless transceivers **620**, **634** (e.g., RF, MMW, and/or NFC) regarding wireless power matters (e.g., frequency selection, operating frequency, impedance matching settings, power levels, etc.). In addition, the wireless transceivers **620**, **634** may be used to convey data between the peripheral device and the computer. For example, if the peripheral device is the wireless keyboard, the keyboard signaling may be conveyed to the computer via the wireless transceivers. Note that with multiple peripheral devices, each including a wireless transceiver, a local area network is created, which requires a network level coordinate of communications therein.

A power module (e.g., computer power module **616** and peripheral device power module **614**) may include an integrated circuit (IC) to support its function. For example, the IC may include at least a portion of a wireless power receiver circuit (e.g., one or more of the coil, capacitor, and diodes of the rectifying circuit may be off-chip), at least a portion of a wireless power transmit circuit (e.g., one or more of the coil, capacitor, and the switching transistors of the DC-to-AC circuit may be off-chip), and the transceiver. The wireless power receiver circuit is operable to convert an electromagnetic signal into a voltage, wherein a wireless power transmitter unit generates the electromagnetic signal. The wireless power transmit circuit is operable to convert the voltage into a second electromagnetic signal. The transceiver communicates first information regarding the first electromagnetic signal, communicates second information regarding a second electromagnetic signal, and communicates peripheral information regarding execution of a function.

FIG. **20** is a schematic block diagram of an embodiment of a computer power module **642** that includes the power receiver circuit **644**, the battery charger **648**, the battery **650**, the power conversion TX circuit **646**, the wireless transceiver **652**, and the processing module **654**. The power receiver circuit **644** includes the RX coil **656**, an adjustable capacitor **658**, the impedance matching & rectify circuit **660**, the regulation circuit **662**, and the control channel transceiver **664**. The power conversion TX circuit **646** includes a multiplexer **666**, a DC-to-AC converter **668**, an impedance matching circuit **670**, an adjustable capacitor **672**, and a coil **674**.

In an example of operation, the RX coil **656** of the power receiver circuit **644** generates an AC voltage from the magnetic field it receives from the TX coil of the WP TX unit. The impedance matching and rectify circuit **660** converts the AC voltage into a DC rail voltage that is regulated via the regulation circuit **662**. The battery charger **648** uses the DC rail voltage to charge the battery **650**.

The power conversion TX circuit **646** is powered by the DC rail voltage when the computer is receiving wireless power from the WP TX unit **646** and is powered by the battery **650** when the computer is in a battery operated mode (assuming the battery **650** has sufficient energy to charge peripheral devices). When in the WP mode, the DC-to-AC converter **668** converts the DC rail voltage into an AC voltage that is provided to the coil **674** via the impedance matching circuit **670**. The coil **674** generates a magnetic field that is received by the RX coil of a peripheral device power module. In an embodiment, the AC voltage of the RX coil **656** of the power receiver circuit **644** of the computer power module **642** may have the same or a different frequency than the AC voltage of the TX coil **674** of the power conversion TX module **646**.

When the computer is in the battery operated mode, the power conversion TX circuit **646** generates the magnetic field as described above if the battery **650** has sufficient power (e.g., a desired battery life level) to charge one or more peripheral devices. If the battery **650** does not have sufficient power, the power conversion TX circuit **646** is disabled.

FIG. **21** is a schematic block diagram of another embodiment of a computer power module **676** that includes the RX coil **678**, an adjustable capacitor **680**, rectifying diodes **682**, a storage capacitor **684**, a buck and/or boost converter **686**, the battery **688**, a battery current sense **690**, a trickle charge circuit **692**, the DC-to-AC converter **694**, another adjustable capacitor **696**, and the processing module **698**. The processing module **698** is configured to implement an RX impedance matching control module **700**, the control channel processing module **702**, a boost control module **706**, a buck control module **708**, a battery charger control module **710**, a DC-to-AC control module **712**, and a TX impedance matching control module **714**. In addition, the processing module **698** may implement the baseband processing **716** for the wireless transceiver. Note that the processing module **698** and one or more other components may be implemented on one or more integrated circuits.

In an example of operation of the back half of the circuit, the DC-to-AC module **694** receives the DC rail voltage produced by the buck and/or boost converter **686**. The DC-to-AC module **694** includes a full bridge inverter topology to excite the coil **697**. The DC-to-AC control module **712** generates the switching signals to drive the DC-to-AC module **694** at a desired frequency. The impedance matching control circuit **714** adjusts the impedance of the capacitor **696** and/or coil **697** to a desired resonance and/or quality factor. As an example, the impedance matching control circuit **714** may tune the capacitor **696** and coil **697** to resonate at the switching frequency of the DC-to-AC converter **694**, to be an under-damped circuit, or an over-damped circuit. In an alternate embodiment, the DC-to-AC converter **694** may include a half bridge inverter topology. Note that the front half of the circuit operates in a similar manner as described with reference to FIG. **10**.

FIG. **22** is a schematic block diagram of an embodiment of a peripheral device power module **722** that includes the RX coil **724**, an adjustable capacitor **726**, the impedance matching and rectifying circuit **728**, the regulation circuit **730**, the battery charger **732**, the battery **734**, the processing module **736**, and the wireless transceiver **738**.

In an example of operation, the RX coil **724** generates an AC voltage from the magnetic field it receives from the TX coil of the computer power module. The impedance matching and rectify circuit **728** converts the AC voltage into a DC rail voltage that is regulated via the regulation circuit **730**. The battery charger **732** uses the DC rail voltage to charge the battery **734**.

FIG. **23** is a schematic block diagram of another embodiment of a peripheral device power module **740** that includes the processing module **742**, the rectify and impedance matching circuit **744** (e.g., capacitors and diodes), the RX coil **746**, a buck &/or boost converter **750**, a trickle charge circuit **748**, a battery **752**, and a battery current sensor **754**. The processing module **742** implements a battery charger controller **756**, a boost controller **758**, a buck controller **760**, an impedance matching circuit **762**, and an RF/MMW and/or NFC baseband processing module **764**. Note that the processing module **742** may be fabricated on a single integrated circuit or on a multiple integrated circuit with one or more of the components of the converter **750**, the rectifier circuit **744**, the trickle charge circuit **748**, and/or the battery current sense **754**.

In an example of operation, the RX coil **746** (which may include one or more adjustable inductors) receives a magnetic field from the computer power module and creates an AC voltage therefrom. The adjustable capacitor **744** is tuned (alone or in conjunction with the RX coil **746**) to a desired resonance, impedance, and/or quality factor to facilitate the creation of the AC voltage. The full bridge rectifier **744** (e.g., the diodes) rectifies the AC voltage to produce a rectified voltage that is filtered by the capacitor **744** to produce a DC rail voltage (e.g., 3-20 volts).

The buck and/or boost converter **750** is enabled in a buck converter mode when the DC voltage rail is to be stepped down to produce battery charge voltage (and the supply voltage Vdd for the device) and is enabled in boost converter mode when the DC rail voltage is to be stepped up to produce the battery charge voltage (and the supply voltage Vdd). Note that when the buck and/or boost converter **750** is in the boost

mode, the buck transistor is enabled. Further note that the buck and/or boost converter **750** may include multiple inductors, transistors, diodes, and capacitors to produce multiple supply voltages.

When the battery **752** is charging, the battery charge control module **756** monitors the battery **752** current and voltage to insure charging is in accordance with the charging requirements of the battery **752**. When the battery **752** is charged, the battery **752** is disconnected from the converter **750** (which may be disable or enabled to provide Vdd) and the battery **752** may be trickle charged **748**. Note that when the WP is lost, the battery **752** is coupled to provide the power for the device.

FIG. **24** is a schematic block diagram of another embodiment of a wireless power system that includes the WP TX unit and a device **1050**. In this diagram, the power TX circuit and the RFID tag and/or reader of the WP TX unit is shown. The device **1050** includes the power RX circuit **1052**, a battery charger &/or DC-to-DC converter **1054**, a battery **1056** (which includes an RFID tag **1058**), the processing module **1060**, memory **1062**, a plurality of input/output (I/O) modules **1064**, a plurality of circuit modules **1068-1070**, a clock generation unit **1072**, an RFID tag and/or reader **1066**, and a power management unit **1074**.

In an example of operation, after the WP TX unit and the device **1050** have established communication, the WP TX unit generates a magnetic field that is received by the power RX circuit **1052** of the device **1050**. The power RX circuit **1052** generates an AC voltage from the magnetic field, rectifies the AC voltage to produce a rectified voltage, and filters to the rectified voltage to produce a DC voltage rail (e.g., V+ and V−). The power RX circuit **1052** may be tuned based on control signals provided by the processing module **1060**. The tuning includes adjusting the quality factor of the circuit, adjusting impedance, current limiting, etc.

The battery charger **1054** converts the DC voltage rail into a battery charge voltage, which it provides to the battery **1056**. The battery charger **1054** monitors the charging to insure proper charging in accordance with the type of battery and, once the battery **1056** is charged, may implement a trickle charge. Note that the processing module **1060** may provide control signals to the battery charger **1054** to regulate the charging in accordance with the type of battery **1056**.

The DC-to-DC converter **1054** converts the battery voltage (e.g., 1.5 volts, 4.2 volts, etc.) into one or more supply voltages (e.g., 1 volt, 2.2 volts, 3.3 volts, 5 volts, 12 volts, etc.). The DC-to-DC converter **1054** provides the supply voltages to one or more of the other modules under the direction of the power management module **1074**. In general, the power management module **1074** functions to control power consumption by the device **1050** to an optimal level (e.g., balancing of performance and battery life). In this regard, the power management module **1074** may treat each module as a separate power island that can be individually controlled. For example, when a circuit module **1068-1070** is inactive, the power management module **1050** may remove power from the circuit module **1068-1070**. As another example, the power management module **1074** may reduce the voltage provided to a circuit module **1068-1070** when the circuit module **1068-1070** does not need to operate at its maximum potential.

In addition to controlling the supply voltage to each power island, the power management module **1074** may control the clock signals provided to each circuit module **1068-1070** that uses a clock signal. For example, when a circuit **1068-1070** is idle, the power management module **1074** may provide a reduced supply voltage to the circuit module **1068-1070**, but disable the clock signal provided to the circuit module **1068-1070**. In this way, minimal power is consumed, but the circuit module **1068-1070** may be quickly activated when it is needed. As another example, the power management module **1074** may reduce the frequency of a clock signal for a circuit module **1068-1070** when the circuit module **1068-1070** does not need to operate at its maximum potential.

To facilitate charging of the battery **1056**, the RFID tag **1058** of the battery **1056** stores information regarding effective and efficient charging of the battery **1056**. For example, the information may indicate the type of battery **1056**, the number of times the battery **1056** has been charged, the desired charging current, the desired charging voltage, the desired charging duration, time base changes in the charge current, time based changes in the charging voltage, trickle charge requirements, etc. In this manner, the battery **1056** provides information regarding its optimal charging such that the device **1050** may configure itself to optimally charge the battery **1056**.

FIG. **25** is a schematic block diagram of an embodiment of a wirelessly chargeable battery **1080** that includes a coil **1090**, an impedance matching & rectify circuit **1082**, a battery charger **1084**, battery cells **1086**, and an RFID tag and/or reader **1088**. Note that the physical size of the components is dependent on the operating frequency of the charger **1084** and the charging requirements of the battery **1086**.

In an example of operation, the coil **1090** of the power RX unit is receives a magnetic field from the TX coil and creates an AC voltage therefrom. The impedance matching and rectify circuit **1082** adjusts the impedance of the coil **1090** and rectifies the AC voltage of the RX coil **1090** to produce a DC rail voltage that is regulated via the regulation circuit (not on figure). Note that impedance matching may be omitted from the in-battery battery charging circuit. The battery charger **1084** adjusts the voltage to a desired charging voltage and monitors the charging current to insure proper charging.

FIG. **26** is a schematic block diagram of another embodiment of a wirelessly chargeable battery **1092** that includes the processing module **1094**, the rectify and impedance matching circuit **1096** (e.g., capacitors and diodes), the RX coil **1098**, a buck (&/or boost) converter **1100**, a trickle charge circuit **1101**, battery cells **1102**, and a battery current sensor **1104**. The processing module **1094** implements a battery charger controller **1106**, a buck (&/or boost) controller **1108**, and an RFID data processing module **1110**. Note that the processing module **1094** may be fabricated on a single integrated circuit or multiple integrated circuit with one or more of the components of the converter **1100**, the rectifier circuit **1096**, the trickle charge circuit **1101**, and/or the battery current sense **1104**.

In an example of operation, the RX coil **1098** (which may include one or more adjustable inductors) receives a magnetic field from the WP TX unit and creates an AC voltage therefrom. The full bridge rectifier **1096** (e.g., the diodes) rectify the AC voltage to produce a rectified voltage that is filtered by the capacitor to produce a DC rail voltage (e.g., 3-20 volts). The buck (and/or boost) converter **1100** is enabled to step down the DC voltage rail to produce battery charge voltage (or as a boost converter to step up the DC rail voltage to produce the battery charge voltage).

When the battery **1902** is charging, the battery charge control module **1106** monitors the battery current and voltage to insure charging is in accordance with the charging requirements of the battery **1096**. When the battery **1092** is charged, the battery **1092** is disconnected from the converter **1100** (which is disabled) and the battery **1102** may be trickle charged.

FIG. **27** is a diagram of an embodiment of a wirelessly chargeable battery that includes the components shown in

FIG. **25** and/or FIG. **26**. In this illustration, the RX coil is fabricated in the negative terminal and/or the positive terminal. The other components may be implemented on a flexible circuit board that conforms to the battery's shell or casing.

FIG. **28** is a diagram of another embodiment of a wirelessly chargeable battery that includes the components shown in FIG. **25** and/or FIG. **26**. In this illustration, the RX coil is fabricated in the negative terminal and the positive terminal. The other components may be implemented on a flexible circuit board that conforms to the battery's shell or casing.

As may be used herein, the terms "substantially" and "approximately" provides an industry-accepted tolerance for its corresponding term and/or relativity between items. Such an industry-accepted tolerance ranges from less than one percent to fifty percent and corresponds to, but is not limited to, component values, integrated circuit process variations, temperature variations, rise and fall times, and/or thermal noise. Such relativity between items ranges from a difference of a few percent to magnitude differences. As may also be used herein, the term(s) "operably coupled to", "coupled to", and/or "coupling" includes direct coupling between items and/or indirect coupling between items via an intervening item (e.g., an item includes, but is not limited to, a component, an element, a circuit, and/or a module) where, for indirect coupling, the intervening item does not modify the information of a signal but may adjust its current level, voltage level, and/or power level. As may further be used herein, inferred coupling (i.e., where one element is coupled to another element by inference) includes direct and indirect coupling between two items in the same manner as "coupled to". As may even further be used herein, the term "operable to" or "operably coupled to" indicates that an item includes one or more of power connections, input(s), output(s), etc., to perform, when activated, one or more its corresponding functions and may further include inferred coupling to one or more other items. As may still further be used herein, the term "associated with", includes direct and/or indirect coupling of separate items and/or one item being embedded within another item. As may be used herein, the term "compares favorably", indicates that a comparison between two or more items, signals, etc., provides a desired relationship. For example, when the desired relationship is that signal **1** has a greater magnitude than signal **2**, a favorable comparison may be achieved when the magnitude of signal **1** is greater than that of signal **2** or when the magnitude of signal **2** is less than that of signal **1**.

While the transistors in the above described figure(s) is/are shown as field effect transistors (FETs), as one of ordinary skill in the art will appreciate, the transistors may be implemented using any type of transistor structure including, but not limited to, bipolar, metal oxide semiconductor field effect transistors (MOSFET), N-well transistors, P-well transistors, enhancement mode, depletion mode, and zero voltage threshold (VT) transistors.

The present invention has also been described above with the aid of method steps illustrating the performance of specified functions and relationships thereof. The boundaries and sequence of these functional building blocks and method steps have been arbitrarily defined herein for convenience of description. Alternate boundaries and sequences can be defined so long as the specified functions and relationships are appropriately performed. Any such alternate boundaries or sequences are thus within the scope and spirit of the claimed invention.

The present invention has been described above with the aid of functional building blocks illustrating the performance of certain significant functions. The boundaries of these functional building blocks have been arbitrarily defined for convenience of description. Alternate boundaries could be defined as long as the certain significant functions are appropriately performed. Similarly, flow diagram blocks may also have been arbitrarily defined herein to illustrate certain significant functionality. To the extent used, the flow diagram block boundaries and sequence could have been defined otherwise and still perform the certain significant functionality. Such alternate definitions of both functional building blocks and flow diagram blocks and sequences are thus within the scope and spirit of the claimed invention. One of average skill in the art will also recognize that the functional building blocks, and other illustrative blocks, modules and components herein, can be implemented as illustrated or by discrete components, application specific integrated circuits, processors executing appropriate software and the like or any combination thereof.

What is claimed is:

1. A battery comprises:
- a positive terminal;
- a negative terminal;
- one or more rechargeable cells operably coupled to the positive terminal and to the negative terminal;
- a voltage sensing circuit operable to determine a voltage of the one or more rechargeable cells; and
- a radio frequency identification (RFID) tag that includes:
  - a transceiver section having a coil integrated into at least one of the positive terminal and the negative terminal, wherein the coil transceives electromagnetic signals within a given frequency band and, at direct current (DC), is a conductive element of the at least one of the positive terminal and the negative terminal;
  - memory for storing battery information and battery charging parameters; and
  - a processing module operable to:
    - obtain the voltage;
    - determine battery charging requirements based on at least one of the voltage, the battery charging information, and the battery charging parameters; and
    - communicate the battery charging requirements via the transceiver section.

2. The battery of claim **1**, wherein the battery information comprises at least one of:
- battery charging parameters;
- battery charging history;
- age of the battery; and
- remaining rechargeable life of the battery.

3. The battery of claim **1**, wherein the battery charging requirements comprises at least one of:
- battery charging parameters; and
- level of need for battery charging.

4. The battery of claim **1** further comprises:
- a wireless power coil operable to generate an alternating current (AC) voltage from a wireless power electromagnetic field; and
- a battery charging circuit, when operable, to:
  - convert the AC voltage into a battery charging voltage; and charge the one or more rechargeable cells via the battery charging voltage.

5. The battery of claim **1** further comprises:
- a flexible substrate for supporting the RFID circuit and the voltage sensing circuit; and
- a casing that encases the one or more rechargeable cells and the flexible substrate.

6. A battery comprises:
one or more rechargeable cells;
a wireless power coil operable to generate an alternating current (AC) voltage from a wireless power electromagnetic field; and
a battery charger circuit operable to:
generate a battery charge voltage from the AC voltage in accordance with a battery charge control signal;
when enabled, charge the one or more rechargeable cells via the battery charge voltage; and
wherein the battery charger circuit comprises output coupling circuitry operable to:
provide the battery charge voltage to the one or more rechargeable cells;
disconnect the one or more rechargeable cells from a terminal of the battery when the wireless power electromagnetic field is detected; and
connect an output of the battery charger circuit to the terminal when the wireless power electromagnetic field is detected.

7. The battery of claim 6 further comprises:
a radio frequency identification (RFID) module operable to:
generate the battery charge control signal; and
communicate with a wireless power transmitter device.

8. The battery of claim 6, wherein the battery charger circuit comprises:
a voltage sensing circuit operable to determine a voltage of the one or more rechargeable cells;
a detection circuit operable to detect the wireless power electromagnetic field; and
a processing module operable to enable the charging of the one or more rechargeable cells based on the voltage and the detection of the wireless power electromagnetic field.

9. The battery of claim 6 further comprises:
a positive terminal operably coupled to the one or more rechargeable cells; and
a negative terminal operably coupled to the one or more rechargeable cells, wherein the wireless power coil is integrated into at least one of the positive terminal and the negative terminal.

10. The battery of claim 9, wherein:
the coil transceives electromagnetic signals within a given frequency band; and
at direct current (DC), is a conductive element of the at least one of the positive terminal and the negative terminal.

11. The battery of claim 6 further comprises:
a flexible substrate for supporting at least a portion of the battery charger circuit; and
a casing that encases the one or more rechargeable cells and the flexible substrate.

12. The battery of claim 6, further comprising:
memory for storing battery information comprising at least one of:
battery charging parameters;
battery charging history;
age of the battery; and
remaining rechargeable life of the battery.

13. A battery circuit module comprises:
a wireless power coil operable to generate an alternating current (AC) voltage from a wireless power electromagnetic field;
a battery charger circuit operable to:
generate a battery charge voltage from the AC voltage in accordance with battery charge information; and
when enabled, charge the one or more rechargeable cells via the battery charge voltage; and
a radio frequency identification (RFID) module operable to:
communicate with a wireless power transmitter device;
generate the battery charge information based on, at least in part, the communication with the wireless power transmitter device; and
a processing module operable to:
process detection of the wireless power electromagnetic field;
process determining a voltage of a battery;
enable the charging of the battery based on the voltage and the detection of the wireless power electromagnetic field;
process a baseband portion of the communication with the wireless power transmitter device; and
generate the battery charge information.

14. The battery circuit module of claim 13, wherein the battery charger circuit comprises:
a voltage sensing circuit operable to determine a voltage of a battery;
a detection circuit operable to detect the wireless power electromagnetic field; and
a processing module operable to enable the charging of the battery based on the voltage and the detection of the wireless power electromagnetic field.

15. The battery circuit module of claim 13 further comprises:
a flexible substrate for supporting at least a portion of the battery charger circuit and the RFID module.

16. The battery circuit module of claim 13, wherein the RFID module comprises:
a coil;
a transceiver section coupled to the coil;
memory for storing the battery charge information that includes at least one of battery information and battery charging parameters; and
a processing module operable to process the battery charging information.

17. The battery circuit module of claim 16 further comprises:
the coil integrated into the wireless power coil.

18. The battery circuit module of claim 16, wherein the battery information comprises at least one of:
battery charging history;
age of the battery; and
remaining rechargeable life of the battery.

19. The battery circuit module of claim 13 wherein the wireless power coil is integrated into a terminal of a battery to be charged.

20. The battery circuit module of claim 19, wherein:
the wireless power coil transceives electromagnetic signals within a given frequency band; and
at direct current (DC), is a conductive element of the at least one of the terminal.

* * * * *