UNITED STATES PATENT AND TRADEMARK OFFICE

BEFORE THE PATENT TRIAL AND APPEAL BOARD

SAMSUNG ELECTRONICS CO., LTD.
Petitioner

v.

MOJO MOBILITY INC.
Patent Owner

Patent No. 11,292,349

PETITION FOR *INTER PARTES* REVIEW
OF U.S. PATENT NO. 11,292,349

TABLE OF CONTENTS

I. INTRODUCTION 1

II. MANDATORY NOTICES 1

III. PAYMENT OF FEES 2

IV. GROUNDS FOR STANDING 2

V. PRECISE RELIEF REQUESTED AND GROUNDS 2

VI. LEVEL OF ORDINARY SKILL 4

VII. '349 PATENT 5

VIII. CLAIM CONSTRUCTION 5

IX. DETAILED EXPLANATION OF GROUNDS 7

A. Ground 1: Claim 17 is obvious over *Fells* 7

1. Claim 1 7

2. Claim 17 55

B. Ground 2: Claim 8 is obvious over *Fells* in view of *Silva* and *Jung* 59

1. Claim 8 59

C. Ground 3: Claims 13, 15, and 16 are obvious over *Fells* in view of *Sagoo* 65

1. Claim 13 65

2. Claim 15 76

3. Claim 16 79

D. Ground 4: Claim 17 is obvious over *Fells* in view of *Walley* 82

1. Claim 17 82

E. Ground 5: Claim 18 is obvious over *Fells* in view of *Ben-Shalom* 87

1. Claim 18 87

F. Ground 6: Claim 17 is obvious over *Fells* in view of *Stoner* and *Nakamura* 92

G. Ground 7: Claim 8 is obvious over *Fells* in view of *Stoner, Nakamura, Silva* and *Jung* 94

H. Ground 8: Claims 13 and 15-16 are obvious over *Fells* in view of *Stoner, Nakamura,* and *Sagoo* 95

I. Ground 9: Claim 17 is obvious over *Fells* in view of *Stoner, Nakamura,* and *Walley* 96

J. Ground 10: Claim 18 is obvious over *Fells* in view of *Stoner, Nakamura,* and *Ben-Shalom* 97

X. DISCRETIONARY DENIAL IS NOT APPROPRIATE 99

XI. CONCLUSION 104

LIST OF EXHIBITS

Ex.1001	U.S. Patent No. 11,292,349
Ex.1002	Declaration of R. Jacob Baker, Ph.D., P.E.
Ex.1003	Curriculum Vitae of R. Jacob Baker, Ph.D., P.E.
Ex.1004	Prosecution History of U.S. Patent No. 11,292,349
Ex.1005	U.S. Patent No. 8,587,154 ("*Fells*")
Ex.1006	U.S. Patent No. 8,829,732 ("*Tengner*")
Ex.1007	U.S. Patent No. 7,782,169 ("*Guenther*")
Ex.1008	U.S. Patent Application Publication No. 2009/0267721 ("*Okada*")
Ex.1009	DOE Fundamentals Handbook Electrical Science, FSC-6910, Vol. 1, DOE-HDBK-1011/1-92, U.S. Department of Energy, June 1992
Ex.1010	U.S. Patent Application Publication No. 2005/0068019 ("*Nakamura*")
Ex.1011	U.S. Patent No. 8,912,686 ("*Stoner*")
Ex.1012	Physics, Henry Semat et al., Rinehart & Co., Inc., 1958, Chapters 29-32 ("*Semat*")
Ex.1013	International Patent Application Publication No. WO2009155000A2 ("*Lin*")
Ex.1014	U.S. Patent Application Publication No. 2008/0067874 ("*Tseng*")
Ex.1015	U.S. Patent No. 9,356,473 ("*Ghovanloo*")
Ex.1016	U.S. Patent No. 9,178,376 ("*Jung*")
Ex.1017	U.S. Patent No. 8,830,036 ("*Park*")

Ex.1018	TeckChuan Beh et al., Wireless Power Transfer System via Magnetic Resonant Coupling at Fixed Resonance Frequency—Power Transfer System Based on Impedance Matching—, 25th World Battery, Hybrid and Fuel Cell Electric Vehicle Symposium & Exhibition, Nov. 5-9, 2010 ("*Beh*")
Ex.1019	U.S. Patent No. 8,975,523 ("*Silva*")
Ex.1020	U.S. Patent Application Publication No. 20140339916 ("*Fells-II*")
Ex.1021	Mojo Mobility's Infringement Contentions in *Mojo Mobility Inc. v. Samsung Elecs. Co., Ltd.*, No. 2:22-cv-00398 (E.D. Tex.) (February 28, 2023)
Ex.1022	Memorandum from Director Vidal (June 21, 2022)
Ex.1023	Federal Court Management Statistics (December 2022)
Ex.1024	Docket Control Order of March 28, 2023, *Mojo Mobility Inc. v. Samsung Elecs. Co., Ltd.*, No. 2:22-cv-00398 (E.D. Tex.)
Ex.1025	Mojo Mobility's Infringement Chart for U.S. Patent No. 11,292,349 (Ex. 6) accompanying Mojo Mobility's Infringement Contentions in *Mojo Mobility Inc. v. Samsung Elecs. Co., Ltd.*, No. 2:22-cv-00398 (E.D. Tex.) (February 28, 2023)
Ex.1026	Watson, J., Mastering Electronics, Third Ed., McGraw-Hill, Inc. (1990)
Ex.1027	Sedra *et al*, Microelectronic Circuits, Fourth Ed., Oxford University Press (1998)
Ex.1028	GB Patent Application Publication No. 2202414 ("*Logan*")
Ex.1029	U.S. Patent No. 7,226,442 ("*Sheppard*")
Ex.1030	International Patent Application Publication No. WO1996040367 ("*WangII*")
Ex.1031	U.S. Patent No. 6,960,968 ("*Odendaal*")

Ex.1032	U.S. Patent No. 6,489,745 ("*Koreis*")
Ex.1033	U.S. Patent Application Publication No. 2004/0201988 ("*Allen*")
Ex.1034	International Patent Application Publication No. WO2003/096361 ("*Cheng*")
Ex.1035	U.S. Patent No. 6,366,817 ("*Kung*")
Ex.1036	AN710 Antenna Circuit Design for RFID Applications
Ex.1037	Spiral Inductor Design for Quality Factor, Sang-Gug Lee et al., Journal of Semiconductor Technology and Science, Vol. 2. No. 1, March 2002 ("*Lee*")
Ex.1038	U.S. Patent No. 4,942,352 ("*Sano*")
Ex.1039	U.S. Patent Application Publication No. 2006/0202665 ("*Hsu*")
Ex.1040	International Patent Application Publication No. WO2004/038888 ("*ChengII*")
Ex.1041	U.S. Patent Application Publication No. 2005/0127868 ("*Calhoon*")
Ex.1042	U.S. Patent Application Publication No. 2006/0145660A1 ("*Black*")
Ex.1043	U.S. Patent No. 5,780,992 ("*Beard-1*")
Ex.1044	U.S. Patent No. 6,912,137 ("*Berghegger*")
Ex.1045	U.S. Patent No. 7,378,817 ("*CalhoonII*")
Ex.1046	U.S. Patent No. 6,606,247 ("*Credelle*")
Ex.1047	U.S. Patent Application Publication No. 2001/0055207 ("*Barbeau*")
Ex.1048	U.S. Patent No. 7,791,311 ("*Sagoo*")
Ex.1049	U.S. Patent No. 8,390,249 ("*Walley*")

Ex.1050	International Patent Application Publication No. WO2012095850A1 ("*Ben-Shalom*")

I. INTRODUCTION

Samsung Electronics Co., Ltd. ("Petitioner") requests *inter partes* review of claims 8, 13, and 15-18 ("challenged claims") of U.S. Patent No. 11,292,349 ("'349 patent") (Ex.1001) assigned to Mojo Mobility Inc. ("PO"). For reasons explained, each challenged claim should be found unpatentable and canceled.

II. MANDATORY NOTICES

Real Parties-in-Interest: Petitioner identifies the following as the real parties-in-interest: Samsung Electronics Co., Ltd., and Samsung Electronics America, Inc.

Related Matters: The '349 patent is at issue in the following matter(s):

- *Mojo Mobility Inc. v. Samsung Electronics Co., Ltd.*, No. 1-22-cv-00398 (E.D. Tx.) (asserting the '349 patent and also U.S Patent Nos. 7,948,208, 9,577,440, 11,316,371, 11,201,500, 11,342,777, and 11,462,942) ("Texas Litigation").
- Petitioner is filing concurrently herewith a petition for *inter partes* review challenging other claims of the '349 patent.

The '349 patent issued from Application No. 17/467,032 (now U.S. Patent No. 11,114,886), which is a continuation of Application No. 15,830,411 (now U.S. Patent No. 10,594,155), which is a continuation of Application No. 14/252,627 (now

U.S. Patent No. 9,837,846), and claims priority to U.S. Provisional Application No. 61/811,638 (filed April 12, 2013). (Ex.1001, Cover.)

Counsel and Service Information: Lead counsel: Joseph E. Palys (Reg. No. 46,508), and Backup counsel are (1) Naveen Modi (Reg. No. 46,224) and (2) David Valente (Reg. No. 76,287). Service information is Paul Hastings LLP, 2050 M St., Washington, D.C., 20036, Tel.: 202.551.1700, Fax: 202.551.1705, email: PH-Samsung-MojoMobility-IPR@paulhastings.com. Petitioner consents to electronic service.

III. PAYMENT OF FEES

The PTO is authorized to charge any fees due during this proceeding to Deposit Account No. 50-2613.

IV. GROUNDS FOR STANDING

Petitioner certifies that the ’349 patent is available for review and Petitioner is not barred or estopped from requesting review on the grounds identified herein.

V. PRECISE RELIEF REQUESTED AND GROUNDS

The challenged claims should be canceled as unpatentable based on the following grounds:

Ground 1: Claim 17 is unpatentable under AIA 35 U.S.C. §103 as obvious over *Fells*;

Ground 2: Claim 8 is unpatentable under 35 U.S.C. §103 as obvious over *Fells*, *Silva*, and *Jung*;

Ground 3: Claims 13, 15, and 16 are unpatentable under 35 U.S.C. §103 as obvious over *Fells* and *Sagoo*;

Ground 4: Claim 17 is unpatentable under 35 U.S.C. §103 as obvious over *Fells* and *Walley*;

Ground 5: Claim 18 is unpatentable under 35 U.S.C. §103 as obvious over *Fells* and *Ben-Shalom*;

Ground 6: Claim 17 is unpatentable under 35 U.S.C. §103 as obvious over *Fells*, *Stoner*, and *Nakamura*;

Ground 7: Claim 8 is unpatentable under 35 U.S.C. §103 as obvious over *Fells*, *Stoner, Nakamura, Silva* and *Jung*;

Ground 8: Claims 13, 15, and 16 are unpatentable under 35 U.S.C. §103 as obvious over *Fells, Stoner, Nakamura,* and *Sagoo*;

Ground 9: Claim 17 is unpatentable under 35 U.S.C. §103 as obvious over *Fells*, *Stoner, Nakamura,* and *Walley*; and

Ground 10: Claim 18 is unpatentable under 35 U.S.C. §103 as obvious over *Fells*, *Stoner, Nakamura,* and *Ben-Shalom*.

The ’349 patent claims priority to a provisional application filed April 12, 2013. (§II.) For purposes of this proceeding, Petitioner assumes that date is the effective filing date.

Fells, Jung, Stoner, Silva, Walley, and *Sagoo* were filed 8/28/2008, 2/24/2010, 11/1/2011, 5/28/2009, 6/3/2010, and 10/24/2006, respectively, and each qualifies as prior art at least under 35 U.S.C. §102(a)(2). *Nakamura* published 3/31/2005 (filed 9/23/2004), and *Ben-Shalom* published 7/19/2012 (filed 1/10/2012), and thus each qualifies as prior art under AIA 35 U.S.C. §§102(a)(1), 102(a)(2).

VI. LEVEL OF ORDINARY SKILL

A person of ordinary skill in the art as of the claimed priority date of the ’349 patent (“POSITA”) would have had at least a master’s degree in electrical engineering, or a similar discipline, and two or more years of experience with wireless charging systems, including, for example, inductive power transfer systems.[1] (Ex.1002, ¶¶20-21.)[2] More education can supplement practical experience and vice versa. (*Id.*)

---

[1] Petitioner disagrees with the applicant’s limited/vague POSITA definition. (Ex.1004, 124.)

[2] Petitioner submits the declaration of R. Jacob Baker, Ph.D., P.E. (Ex.1002), an expert in the field of the ’349 patent. (Ex.1002, ¶¶5-13; Ex.1003.)

VII. '349 PATENT

The '349 patent generally relates to inductive power transfer from a charger to one or more receivers. (Ex.1001, 1:53-56, 2:8-12; 2:13-33, Abstract.) The Examiner allowed the claims without any rejections. (Ex.1004, 113-114.) However, as demonstrated below, the claimed features are compilations of known technologies/techniques disclosed/suggested in the prior art. (§IX; Ex.1002, ¶¶22-311; Exs. 1005-1018, 1026-1047.)

VIII. CLAIM CONSTRUCTION

The Board only construes claims when necessary to resolve the underlying controversy. *Toyota Motor Corp. v. Cellport Systems, Inc.*, IPR2015-00633, Paper No. 11 at 16 (Aug. 14, 2015). For this proceeding, Petitioner believes that construction is necessary only for the term identified below.[3] (Ex.1002, ¶¶59-60.)

Claim limitation 1(k) recites a "**means for <u>positioning the receiver in a power transfer position, proximate to the charger surface, to inductively</u>**

[3] Petitioner reserves all rights to raise claim construction and other arguments, including §112 challenges, in district court as relevant there. *See, e.g.*, *Target Corp. v. Proxicom Wireless, LLC*, IPR2020-00904, Paper 11 at 11–13 (Nov. 10, 2020). A comparison of the claims to any accused products may raise controversies that are not presented here given the similarities between the references and the patent.

transfer power to the receiver of the first mobile device." (Ex.1001, 23:49-52.) The "means for" language does not provide sufficient definite meaning as the name for structure, and thus, the term should be construed as a means-plus-function term. *Williamson v. Citrix Online, LLC*, 792 F.3d 1339, 1347-49 (Fed. Cir. 2015).

The identified function is **underlined** above. The corresponding structure encompasses that described in the specification and dependent claims 24-25 and/or equivalents thereof. (Ex.1001, 14:35-38 ("…means to provide more precise alignment between the charger and receiver coils or antennas" including "**visual, physical, or magnetic means** *to assist the user in alignment of parts*.")[4], 25:56-63 (means for positioning "includes **one or more magnets**", means for positioning includes one or more of "**visual, physical, or magnetic means**").)[5]

[4] All emphasis added.

[5] *Supra* n.3.

IX. DETAILED EXPLANATION OF GROUNDS

A. Ground 1: Claim 17 is obvious over *Fells*

Claim 17 depends from claim 1.

1. Claim 1

a) 1(a): A system for inductive power transfer comprising:

To the extent limiting, *Fells* discloses this limitation. (Ex.1002, ¶¶110-117.) *Fells* discloses "an ***inductive power transfer system*** including a primary unit and a secondary device," where the primary unit includes a "power transfer surface" and "field generators" (e.g., primary coils/cells) and the secondary device (e.g., a mobile device) includes a "power receiver having a secondary coil." (Ex.1005, Abstract.) *Fells* describes various power transfer system configurations including such transmitter/receiver components and related circuitry. (§§IX.A.1(b)-(q); Ex.1005, Abstract, FIGS. 1-8, 16-20, 22-23, 1:3-6:3, 6:56-8:9, 10:26-11:8, 11:26-12:19; *see*

also id., FIGS. 9-15, 21, 24-27, 8:10-10:25, 11:9-25, 13:26-22:35; Ex.1002, ¶¶110-112.)

Fig. 2

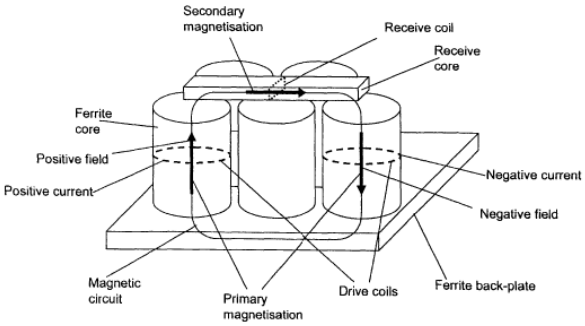

Fig. 8

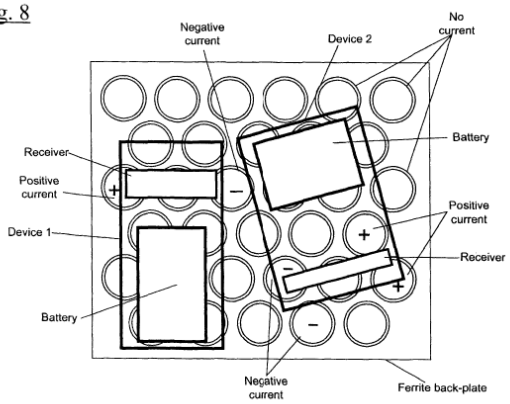

Fig. 5

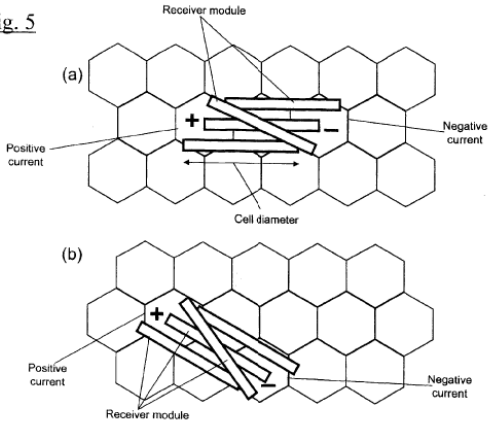

Fig. 18

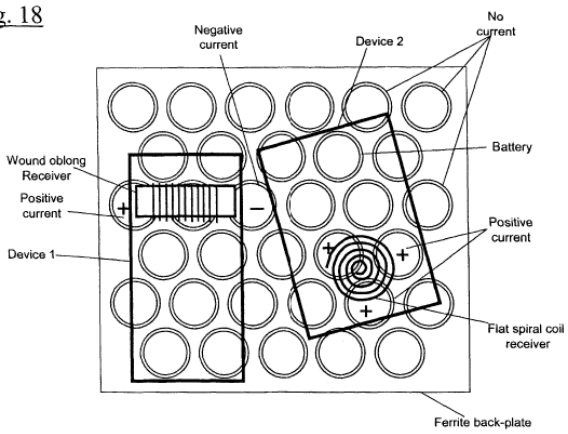

Fig. 16

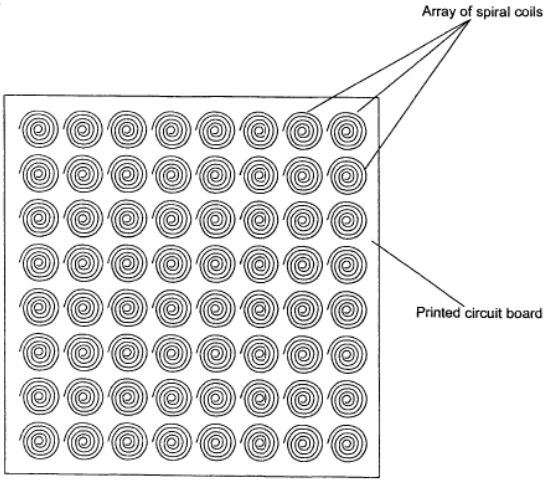

Fig. 17

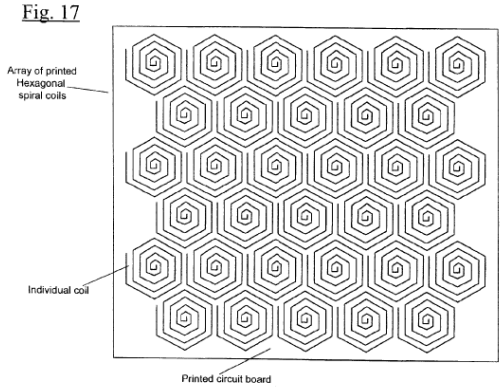

Fig. 23

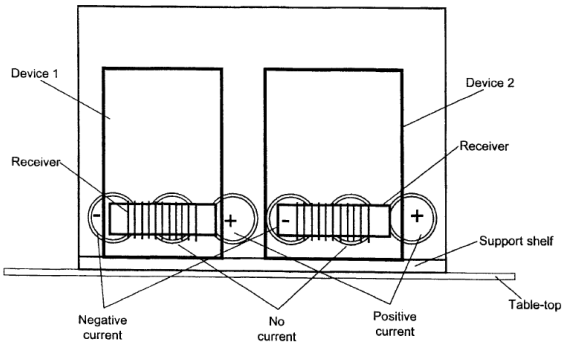

The various arrangements/materials/configurations, etc. are related to a "system" like that claimed—including configurations including features not directly mapped/applied to the claim limitations herein. (§§IX.A.1(b)-(q).) For instance, while FIG. 2 describes non-planar coils, the disclosure concerning magnetic fields forming a magnetic circuit via activated coils is applicable to other configurations (e.g., planar charging coils). (Ex.1005, Fig. 2, 7:9-24, 10:26-34.) Consequently, the "system" disclosed by *Fells* includes any of the "system" configurations that

encompass components/features tracking the features of claim 1. (*Id.*; Ex.1002, ¶¶113-117; *e.g.*, Ex.1005, 1:41-6:3, 12:9-22:32; §§IX.A.1(b)-(q).)

b) <u>1(b):</u> a charger, wherein the charger is an inductive charger, and the charger includes:

Fells discloses this limitation. (Ex.1002, ¶¶118-122.) *Fells*' "**inductive power transfer**" "**system**" includes a primary unit ("**charger**") that transfers power to the secondary/mobile device via electromagnetic induction. (§IX.A.1(a); Ex.1005, FIGS. 9, 13, 26, Abstract, 2:28-33, 6:9-14, 6:15-52, 6:57-7:21, 7:25-42, 8:1-9 (*devices* simultaneously charged), 8:10-9:63; 13:53-14:14; Ex.1002, ¶119; §§IX.A.1(c)-(q).)

<u>Fig. 9</u>

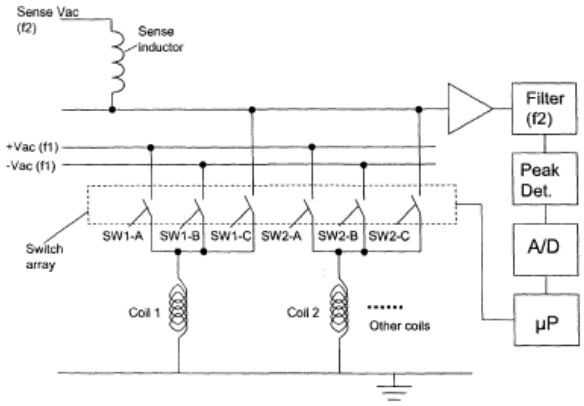

<u>Fig. 13</u>

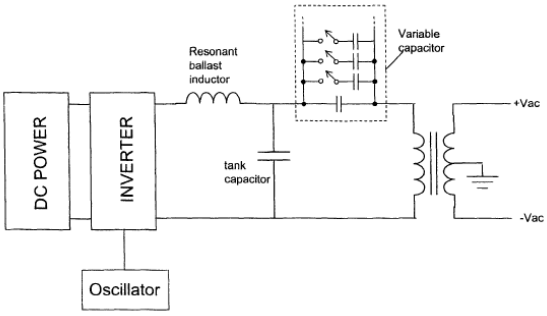

Fells discloses a "**charger**" also by a portion of the primary unit including one or more of the charging coil(s) and associated circuitry/components discussed herein. As one example, a "charger" is exemplified in FIG. 23 (annotated-below) by the charging coils on left-side (red) or right-side (blue) of the unit (and associated

circuitry/components discussed herein). (§§IX.A.1(a)-(q)).[6] (*See* §§IX.A.1(c)-(q); Ex.1002, ¶¶120-122.)

Fig. 23

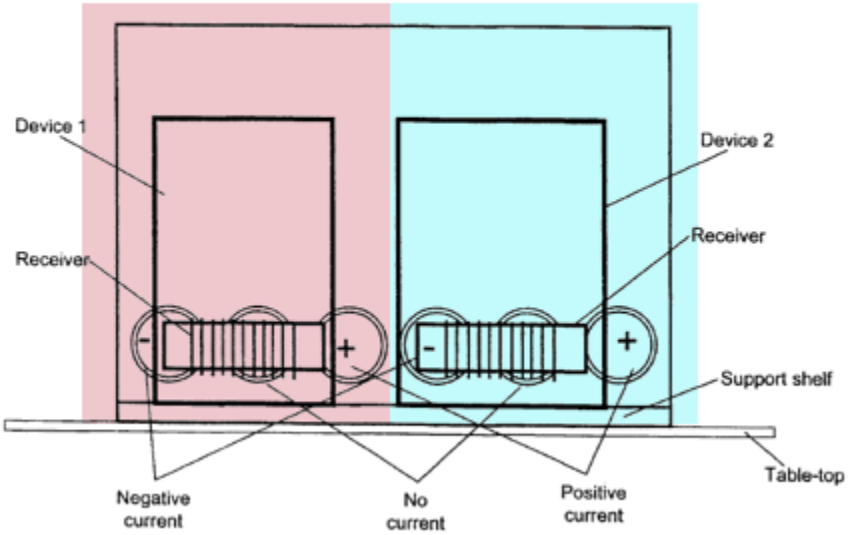

c) 1(c): a printed circuit board having a charger coil, wherein the charger coil has a substantially planar charger surface;

Fells discloses this limitation. (Ex.1002, ¶¶123-125; §§IX.A.1(a)-(b).) *Fells*' "charger" can include one or more planar primary coils ("**charger coil** [having] **a substantially planar charger surface**") on a "**printed circuit board**" (PCB). For

[6] The highlighted portions in FIG. 23 are exemplary and not limiting in terms of boundaries or components of the "charger" in *Fells*. Other configurations in *Fells* likewise disclose a "charger" as claimed.

example, the charger can be formed "using a ***PCB*** implementation" where "an array of ***planar spiral coils*** [are] used to generate the vertical fields." (Ex.1005, 10:26-28; *id.*, 10:28-37, FIGS. 16-17 (annotated-below); FIG. 23, 11:45-64 ("PCB coils…can be used…"), Claim 1; Ex.1002, ¶¶124-125; §§IX.A.1(d)-(q).)

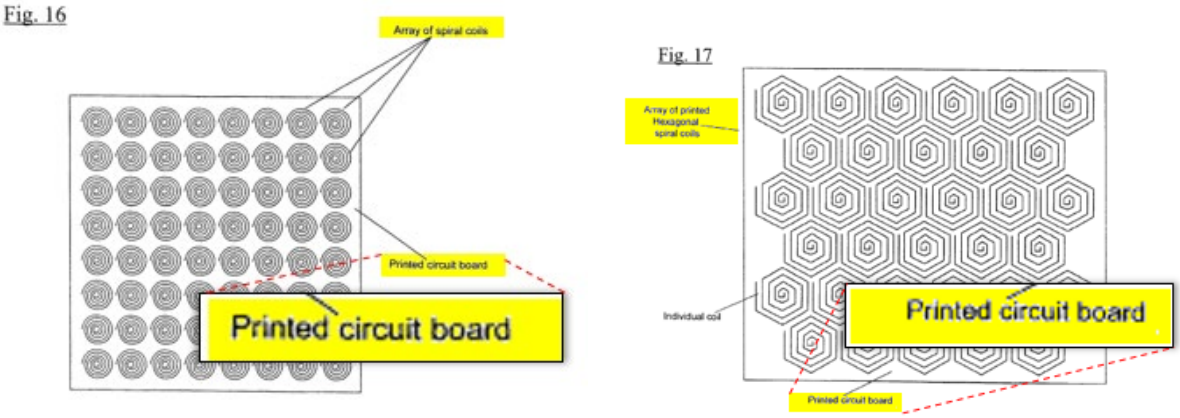

d) <u>1(d)</u>: a substantially planar magnetic layer under the charger coil opposite the charger surface; and,

Fells discloses this limitation. (Ex.1002, ¶¶126-128; §§IX.A.1(a)-(c).) The charger can include a ferrite backplate ("**substantially planar magnetic layer**") under the primary coil(s) ("**charger coil(s)**") that is "**opposite the charger surface**" since it is positioned under the surface of the primary coil(s) that generate the magnetic field used to inductively transfer power. (Ex.1005, 10:26-34 (PCB-planar-coil-implemented charger of FIG. 16 where "[a] ***ferrite back plate*** would typically be required"), 11:65-12:9 (discussing FIG. 23, where "[a] ferrite back-plate may be used behind the vertical cores to act as a flux return path" and "[t]he permeable

material from which…back-plate [is] manufactured is preferably ***Mn-Zn ferrite, but other magnetic materials***…***could be used***"), 6:57-63 (FIG. 1(b) coils attached to a "***ferrite backplate***"), 7:9-21 (FIG. 2 "***ferrite backplate***" forms a "magnetic circuit" with a first coil and receiver core), 8:26-32, FIG. 16; *id.*, FIGS. 3, 8, 17-18; §IX.A.1(a); Ex.1002, ¶127.)

Fig. 2

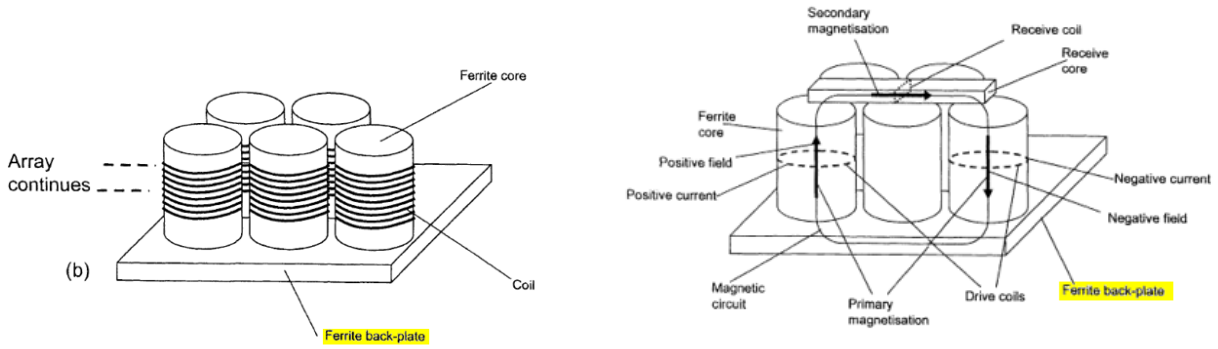

Thus, the ferrite backplate implemented in the various charger applications is a "**substantially planar**" magnetic layer and positioned "**under the charger coil(s)**" and "**opposite**" the charger "surface" (which faces the secondary coil). (Ex.1002, ¶128.) (§§IX.A.1(e)-(q).)

e) <u>1(e)</u>: a charger drive circuit, wherein the charger drive circuit includes a resonant capacitor and a FET switch to apply an alternating voltage to the charger coil; and

Fells discloses this limitation. (Ex.1002, ¶¶129-143.) The above-described "system" can be configured for various applications. (§§IX.A.1(a)-(d).) For

example, Figure 4 (below) describes an exemplary relationship between a power receiver (§IX.A.1(f)) and charger coils. (Ex.1005, 7:31-42; Ex.1002, ¶¶130-133.)

Fig. 4

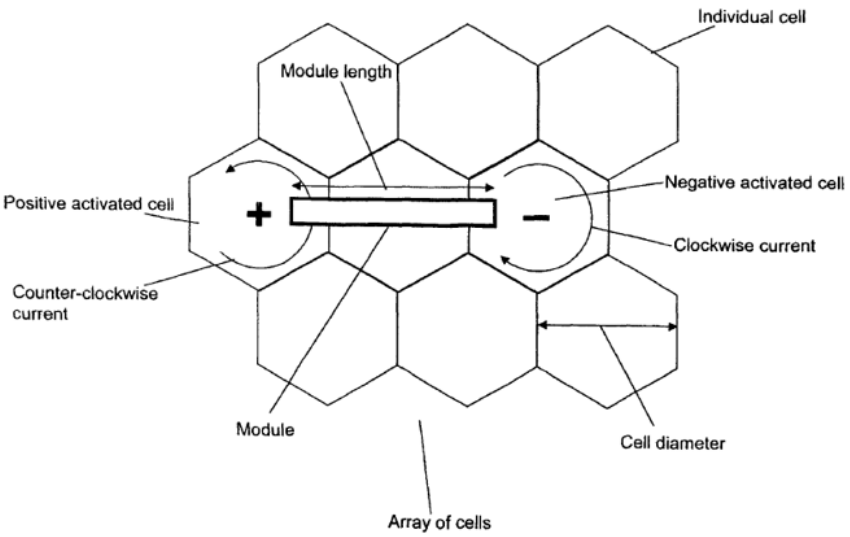

The receiver can be powered by activating multiple coils even when placed in different positions. FIG. 5 (below) shows two charging coils powering receivers in different positions. (*Id.*, 7:25-67.)

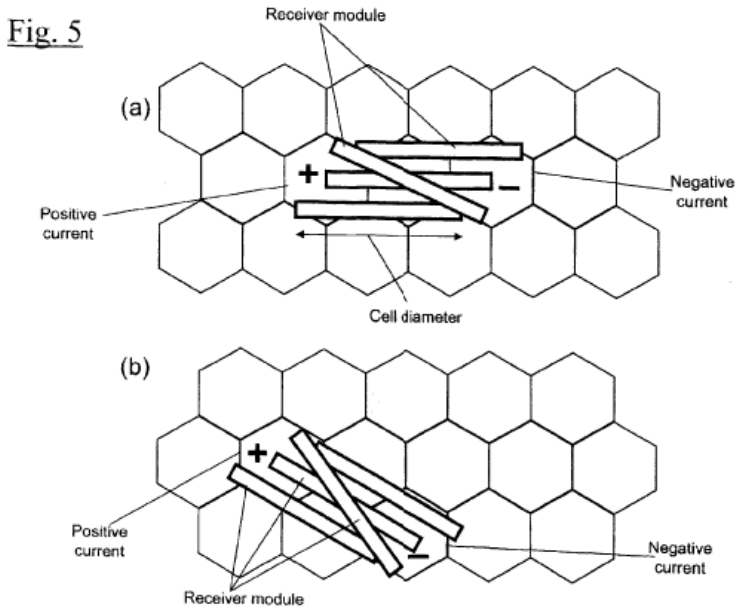

FIGS. 6 and 7 (below) show other examples using multiple coils. (*Id.*, 7:50-57.)

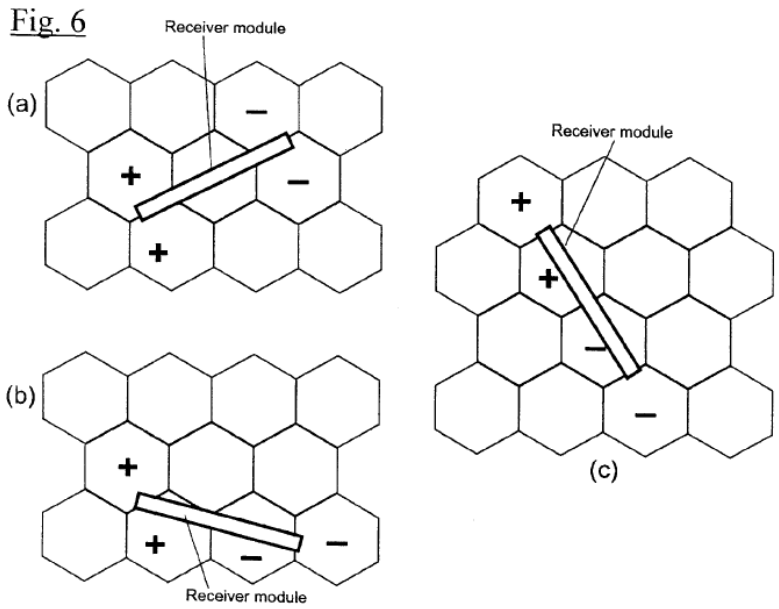

Fig. 7

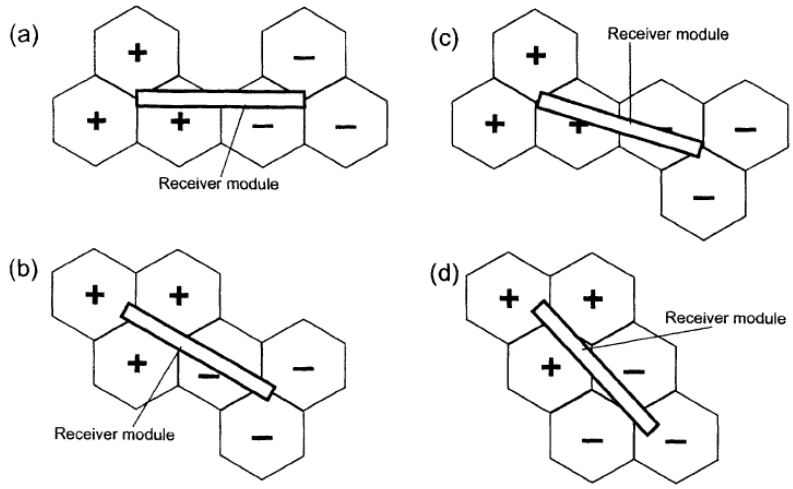

FIG. 8 (below) shows simultaneously charging multiple devices. (*Id.*, 8:1-9.)

Fig. 8

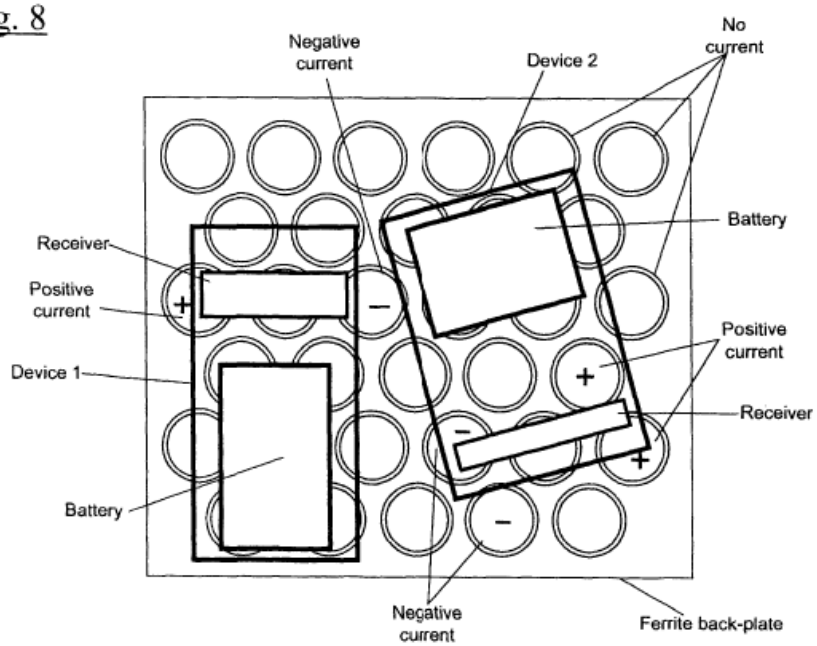

Regarding FIGS. 9 and 13 (below), the "charger" can include components for sensing receiver coil position and switching/activating appropriate primary coils.

(Ex.1005, 6:27, 6:31-32, 8:10-13.) Such an arrangement uses AC signals, and "FIG. 13 shows a means of generating these signals." (Ex.1005, 9:46-48; Ex.1002, ¶134.)

Fig. 9

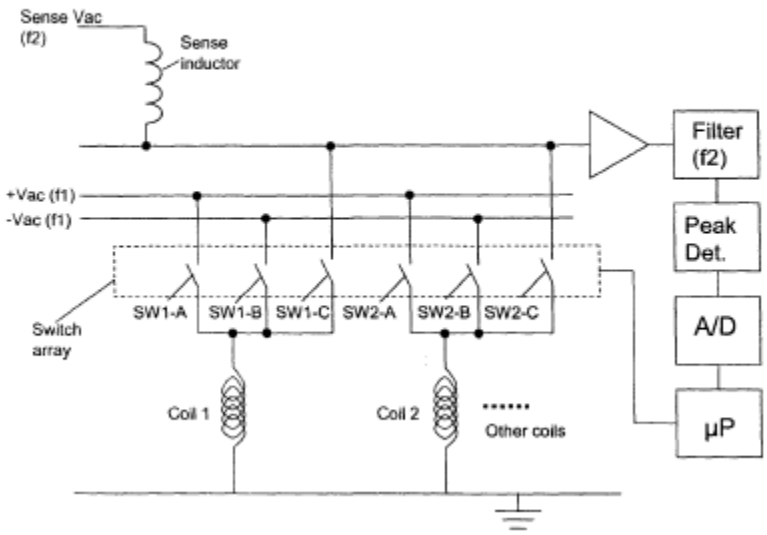

Fig. 13

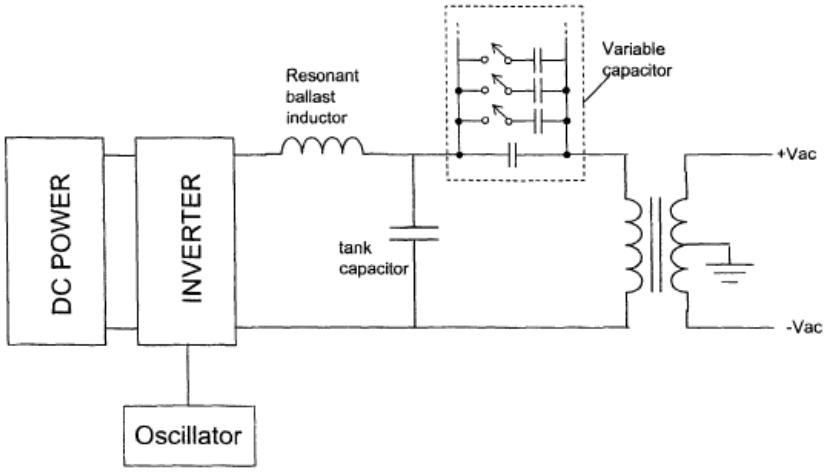

Each charger coil may be connected to switches (*e.g.*, SWx-A/SQx-B/SWx-C (FIG. 9)) controlled by a microprocessor. (*Id.*, 8:13-15.) Some (SWx-A/SWx-B) "are ***used***

to drive the coil" via connection to AC supplied by +Vac/-Vac and another (SWx-C) is supplied with Vac and is used for sensing which coils to activate. (*Id.*, 8:15-41.) FIG. 13 shows a DC power source coupled to an inverter "to generate an AC signal at a reference oscillator frequency." (*Id.*, 9:46-63.) The inverter output is "coupled to an inductor and capacitor resonant at the oscillator frequency," which "in turn [is] coupled to a transformer, via a variable capacitor." (*Id.*) "The two ends of the transformer output provide the positive and negative polarity inputs to the circuit of FIG. 9." (*Id.*) The microprocessor executes an algorithm to determine appropriate coils to drive. (*Id.*, 8:57-9:45, 11:26-44 ("drive pairs of coils in the charger"); *id.*, 12:60-13:22, FIG. 23.) (Ex.1002, ¶¶135-137.)

Fells explains alternative arrangements can be used "for providing the power for the coils and switching this power to the required coils." (Ex.1005, 13:23-25; *id.*, 13:26-14:35, FIGS. 24-27, 14:36-22:32.) FIG. 26 shows a configuration "for driving multiple devices" that may have "different power requirements." (*Id.*, 13:53-55.)

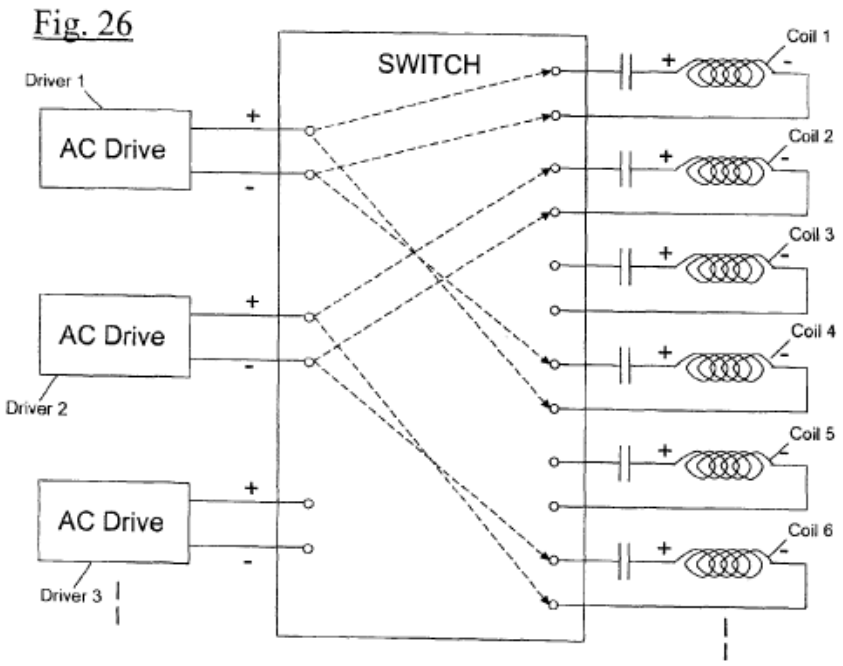

Similar to the FIG. 9, 13 arrangement, switches connected to AC drivers can be "used to drive a pair of coils" (positive/negative polarities). (*Id.*, 13:55-14:15.) The drivers may connect to more than one pair of coils, and can use separate/dual sources ("for example as in FIG. 13 or 24"). (*Id.*, 14:5-14.) "A ***resonant capacitor*** may be placed at either the driver side or the coil side of the switch." (*Id.*, 13:57-59.) Different types of switches can be used, including "**FET**" switches. (*Id.*, 14:32-35, 9:42-56 ("**MOSFET** switches"), 12:66-13:13.) *Fells*' teachings are consistent with known use of resonant circuits in charging devices. (Ex.1002, ¶¶138-139; Ex.1011, FIG. 1, 7:3-9; Ex.1049, 5:63-6:6, 8:8-21, 9:38-58, 10:38-53, 11:13-32, 12:27-35, 17:35-42, 23:47-54.) .)

Thus, *Fells* discloses a "**charger**" including driving circuitry ("**charger drive circuit**") that includes "**FET**" switch(es) and a "**resonant capacitor**" (*e.g.*, positioned before/after the switch) that "**apply an alternating voltage**" to selected "**charger coil(s)**," as claimed (Ex.1002, ¶¶140-143; §§IX.A.1(f)-(q).)

f) <u>1(f)</u>: a first mobile device that includes a receiver to inductively receive power for the first mobile device, wherein the receiver includes:

Fells discloses this limitation. (Ex.1002, ¶¶144-150.) *Fells'* system inductively charges a mobile device via a power receiver in the device. (§§IX.A.1(a)-(e); Ex.1005, FIGS. 1-2, 5-8, 18-23, 1:3-16, 6:57-60 ("power receiver suitable for embedding in a portable device"), 6:25-26, 7:9-21, 8:1-9, 10:38-67, 11:15-21, 11:45-55, 12:60-65.) The mobile device's "**receiver**" inductively receives power from the charger coils. (§§IX.A.1(a)-(e); Ex.1002, ¶¶145-150; *see* §§IX.A.1(g)-(q).)

Fig. 1

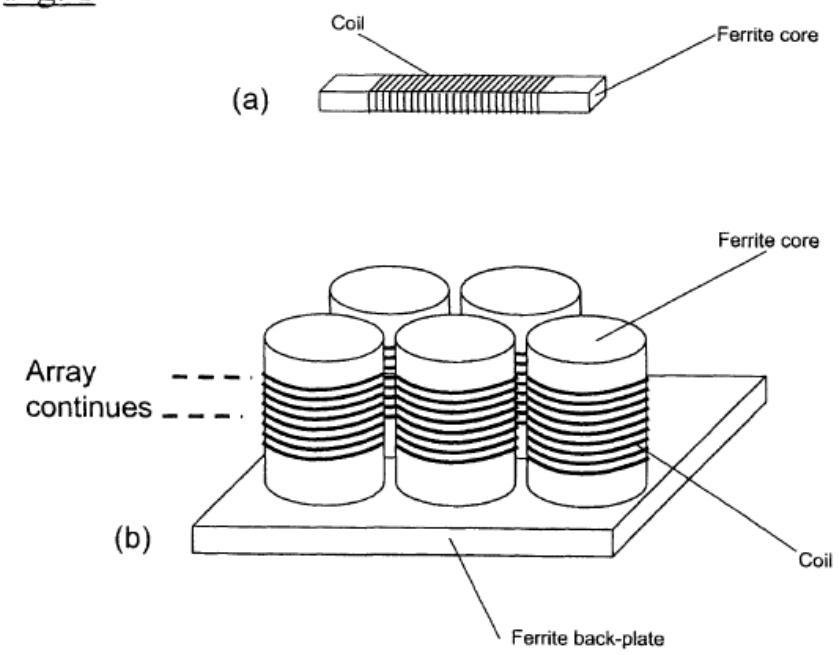
Coil
Ferrite core
(a)
Ferrite core
Array
continues
(b)
Coil
Ferrite back-plate

Fig. 8

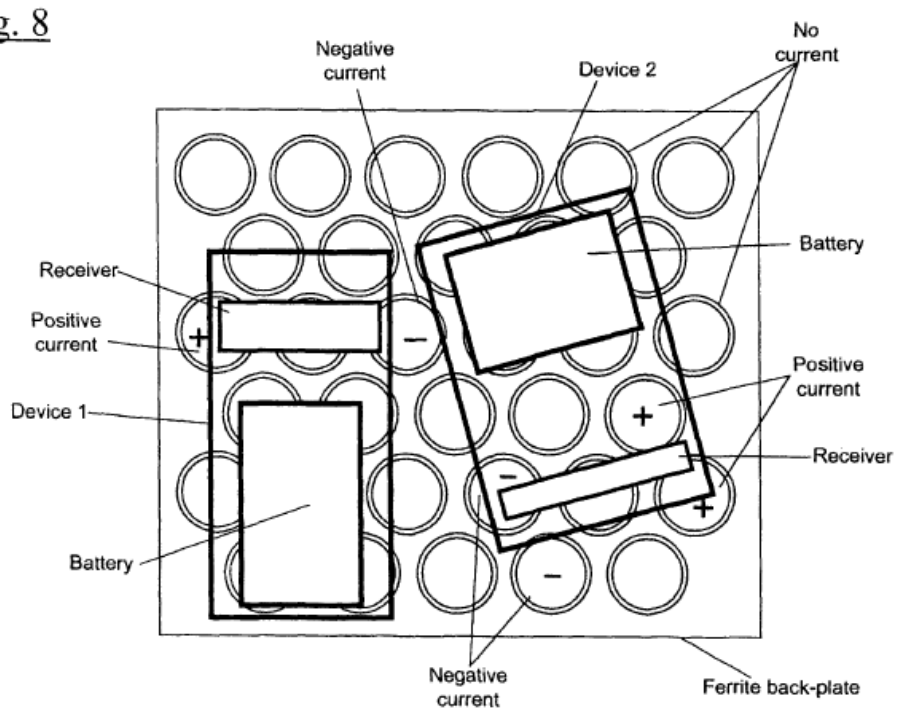
Negative
current
Device 2
No
current
Battery
Receiver
Positive
current
Device 1
Positive
current
Receiver
Battery
Negative
current
Ferrite back-plate

Fig. 18

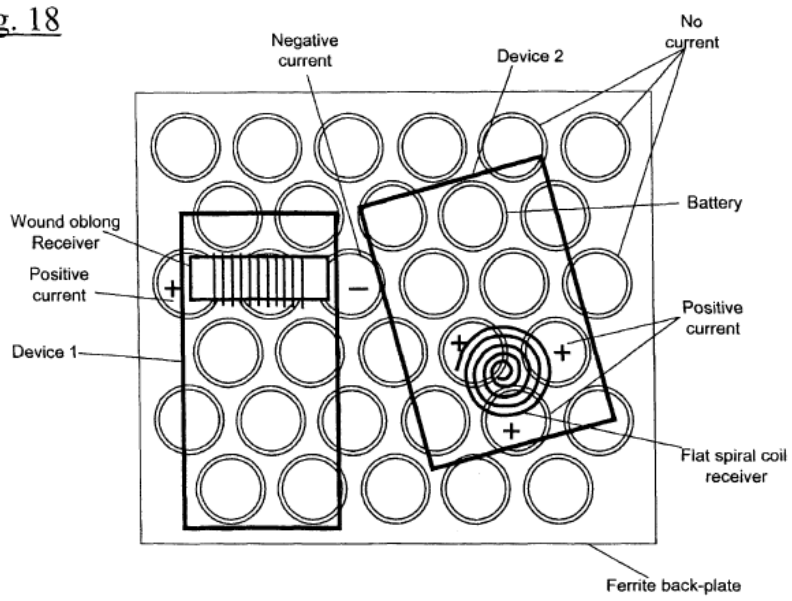
Negative current
Device 2
No current
Battery
Wound oblong Receiver
Positive current
Device 1
Positive current
Flat spiral coil receiver
Ferrite back-plate

Fig. 19

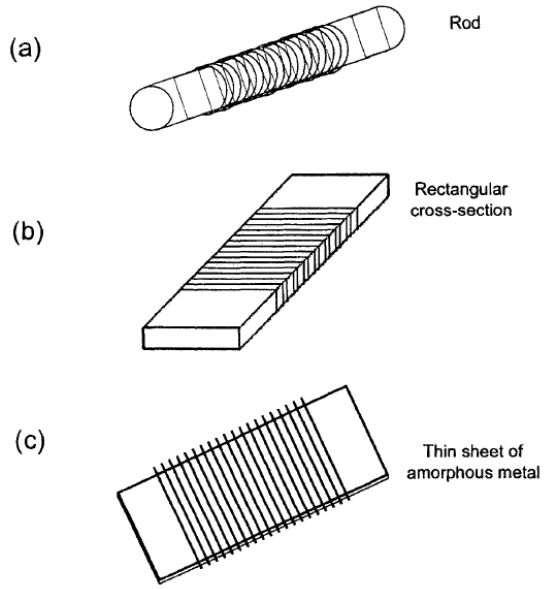
(a)
Rod
(b)
Rectangular cross-section
(c)
Thin sheet of amorphous metal

Fig. 23

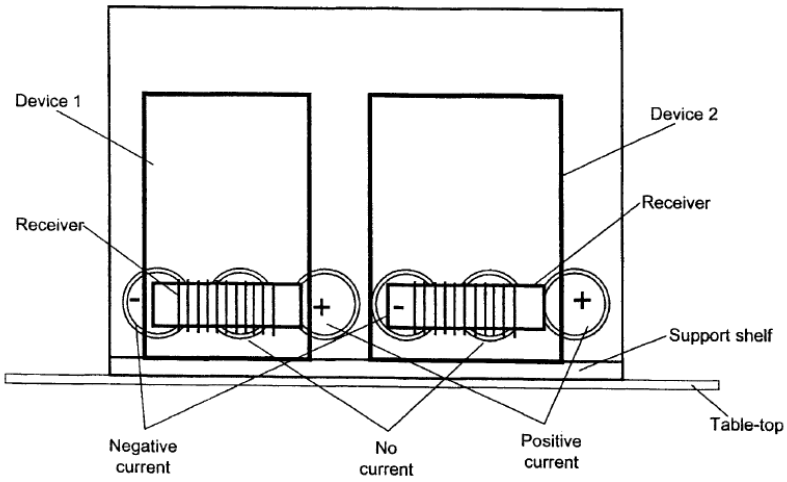

g) <u>1(g)</u>: a solenoid, wherein the solenoid includes:

Fells discloses this limitation. (Ex.1002, ¶¶151-158; §§IX.A.1(a)-(f).) The '349 patent describes a receiver "solenoid" in non-limiting ways, such as "a ***blade or thin solenoid***." (Ex.1001, 2:30-31; *id.*, 2:54-55, 8:63-65, 9:21-27 ("***solenoid…is shaped as or otherwise resembles a blade***"), 21:65-22:2, 2:58-63, FIGS. 7, 9-10.)

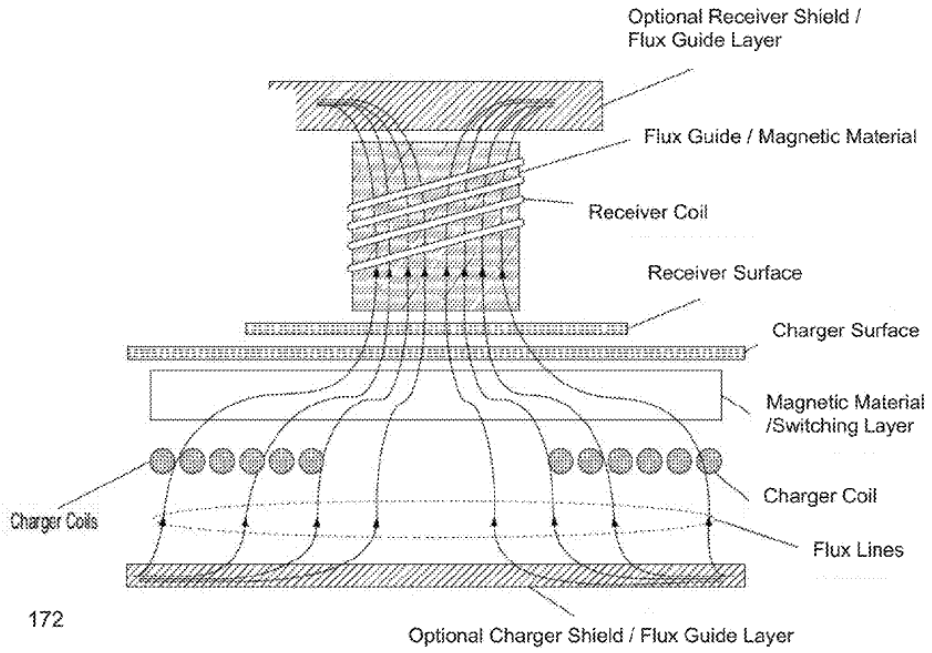

FIGURE 7

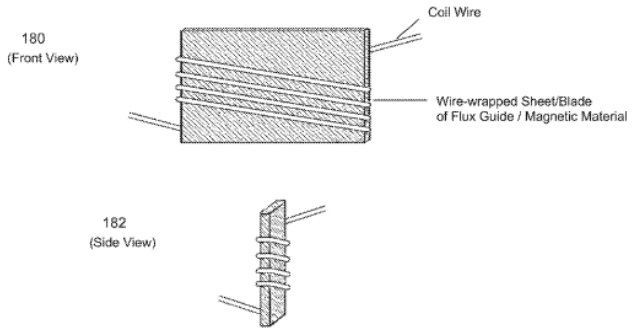

FIGURE 9

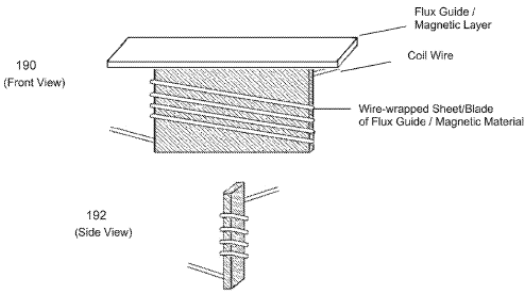

FIGURE 10

(Ex. 1001, FIGS. 7, 9-10.) The claimed "solenoid" encompasses at least these types of "solenoid(s)." (Ex.1002, ¶152.)

Fells discloses the power receiver can be configured as a "**solenoid**" like that of the '349 patent. (Ex.1002, ¶¶153-158; Ex.1005, 6:39, 6:57-7:7, 10:60-63 ("FIG.

19 shows a range of different types of receiver"), 11:9-21, FIGs. 1(a), 19, 21.) (*See* §§IX.A.1(h)-(q).)

Fig. 1

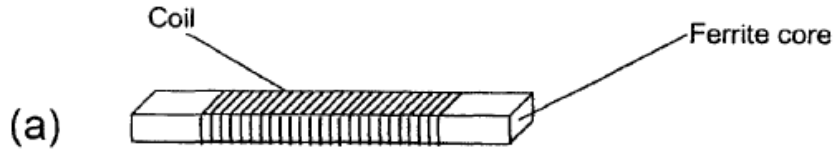

Fig. 19

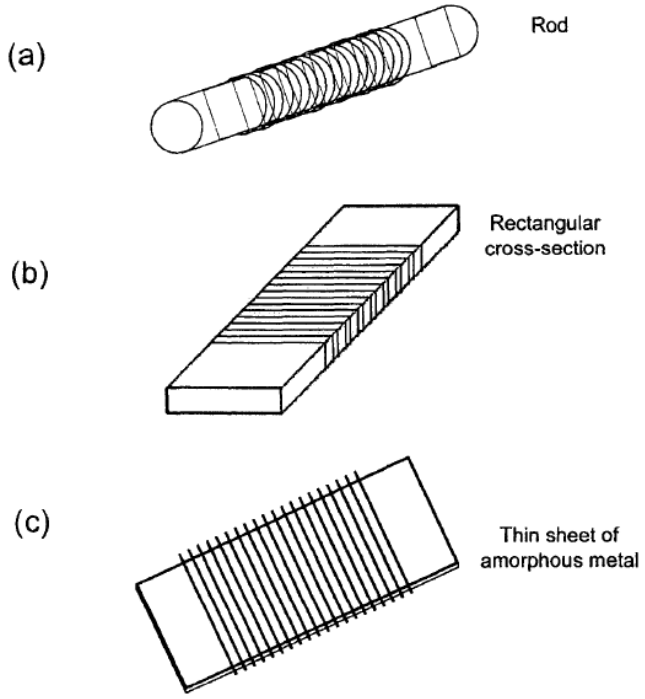

Fig. 21

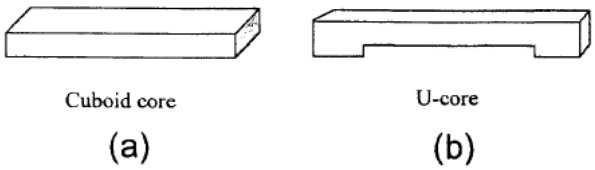

h) 1(h): a magnetic core having a relative magnetic permeability exceeding 1 and having first and second ends; and

Fells discloses this limitation. (Ex.1002, ¶¶159-164.) The receiver solenoid (secondary coil) includes a core (§IX.A.1(g)) of high magnetic permeability material with first and second ends. (§§IX.A.1(a)-(g); Ex.1005, 6:57-60 (receiver "has a ferrite core and coil wound around the core"), 7:19-16, 8:26-32 ("***the ferrite in the receiver*** reduces the reluctance of the magnetic circuit compared to air"), 11:1-4 ("preferable that ***the coil winding does not go all the way to the ends of the magnetic material***"), 11:15-21 (receiver coil with "***high effective permeability***"), 12:3-8, FIGs. 1-2; Ex.1002, ¶¶160-161.)

A POSITA would have understood that that such a magnetic core with "high effective permeability" necessarily discloses a "magnetic core having a relative magnetic permeability exceeding 1," because it was known ferrite material-based

cores have relative permeability over 1, especially given the permeability of air is close to 1. (Ex.1002, ¶¶162-163; Ex.1006, 1:10-45, 5:49-57, 2:4-11, 2:26-31, 2:37-48; Ex.1007, Abstract, 3:26-40, 4:50-56 ("magnetic permeability >1"), 5:45-6:23, 15:21-16:58; Ex.1008, Abstract, ¶¶0012, 0013-0018, 0032-0035, 0051-0053, 0073-0075; Ex.1009, Abstract (6), 51 ("***[f]errites...have relative permeabilities that range from 50-200***").[7] (*See* §§IX.A.1(i)-(q).)

Given *Fells* discloses the magnetic core of the receiver solenoid can be ferrite, a POSITA would have understood that *Fells* necessarily discloses the core having relative magnetic permeability greater than 1. (*Supra*; Ex.1002, ¶164, Ex.1005, 8:26-32; §§IX.A.1(d), IX.A.1(p)-(q); Exs. 1006-1009.) *Fells*' teachings are consistent with the '349 patent dependent claim 10 ("magnetic core" is "ferrite").

i) <u>1(i)</u>: Litz wire wrapped around a section of the magnetic core forming a wire wound section around the magnetic core, with the magnetic core extending beyond the wire wound section; and

Fells discloses this limitation. (Ex.1002, ¶¶165-169; §§IX.A.1(a)-(h).) The magnetic core of the "solenoid" is wire wrapped. (*Id.*; Ex.1005, 1:51-57, 2:12-21, 2:43-46, 3:12-17, 3:47-53, 4:8-11, 4:38-47, 5:2-16, 5:57-64, FIGs. 18-20, 22-23.) "Preferably ***Litz wire is used for*** both the primary and ***secondary coils***." (Ex.1005, 7:3-4.) "***Litz wire*** has many strands of [insulated] copper, which "allows the copper

[7] Exs. 1006-1009 demonstrate state-of-art knowledge.

losses to be reduced." (*Id.*, 7:4-8.) Secondary core/coil configurations include "**the magnetic core extend[ing] beyond the wire wound section**" like that claimed. (*Id.*, FIGS. 1, 18-20, 22-23, 11:1-4 ("It is preferable that ***the coil winding does not go all the way to the ends of the magnetic material***."); Ex.1002, ¶¶166-169.) (§§IX.A.1(j)-(q).)

Fig. 20

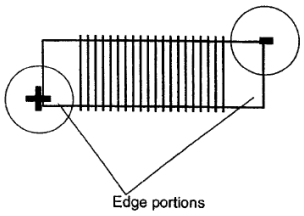

Fig. 1

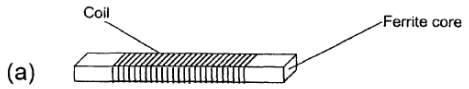

Fig. 18

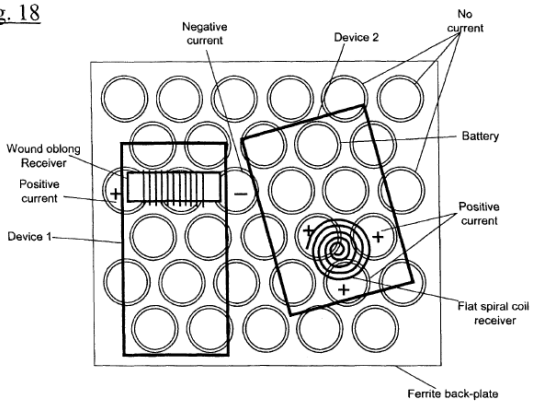

Fig. 23

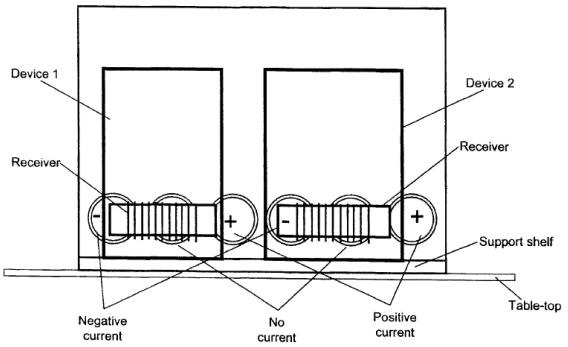

j) <u>1(j)</u>: a receiver electronic circuit, wherein the receiver electronic circuit includes a resonant capacitor and a rectifier; and

Fells discloses this limitation. (Ex.1002, ¶¶170-173.) The mobile device includes an electronic circuit configured to facilitate reception of power transferred by the charger ("**receiver electronic circuit**"). (Ex.1005, FIG. 14, Abstract, 6:33-34 ("FIG. 14 shows a block diagram of the electronics within the portable device."), 9:64-10:12; §§IX.A.1(a)-(i).)

<u>Fig. 14</u>

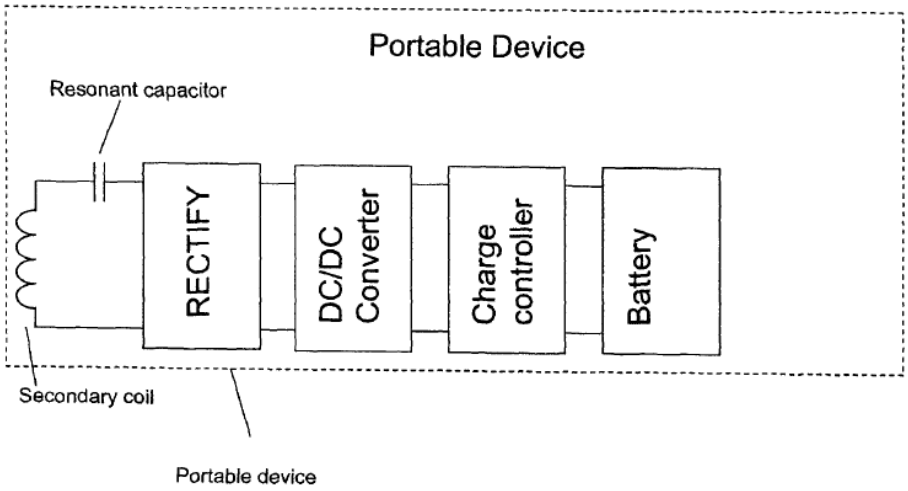

The circuit includes a "***rectifier***" and a "***resonant capacitor***" that ensures "the combination is resonant at the oscillator frequency." (*Id.*, FIG. 14, 9:65-67.) Thus, *Fells*' mobile device includes a "**receiver electronic circuit**" including "**a resonant capacitor and a rectifier**." (Ex.1002, ¶¶171-173.) (§§IX.A.1(k)-(q).)

k) <u>1(k)</u>: the charger further includes a means for positioning the receiver in a power transfer position, proximate to the charger surface, to inductively transfer power to the receiver of the first mobile device;

Fells discloses/suggests this limitation under its plain meaning and/or as construed above. (Ex.1002, ¶¶174-184; §VIII.) *Fells* discloses charger configurations that ensure mobile device(s) placed proximate to the charger surface are aligned to facilitate inductive transfer of power to the "receiver" (§§IX.A.1(f)-(j)). FIG. 23 describes a variation to a horizontal flat pad charger that sits upright (at an angle) to allow mobile device(s) to be placed thereon ("**proximate to the charger surface**"). (Ex.1005, FIG. 23 (below), 11:45-5:19, 1:58-63 ("secondary device may be placed anywhere on or in *proximity to the power transfer surface* to receive power") 2:21-26, 2:58-63, 3:19-34, 3:54-59, 4:17-22, 4:48-53, 5:9-23, 5:43-48, 5:65-6:3, 7:9-13, 8:57-9:45, FIGS. 10-12, 14:16-23.)

Fig. 23

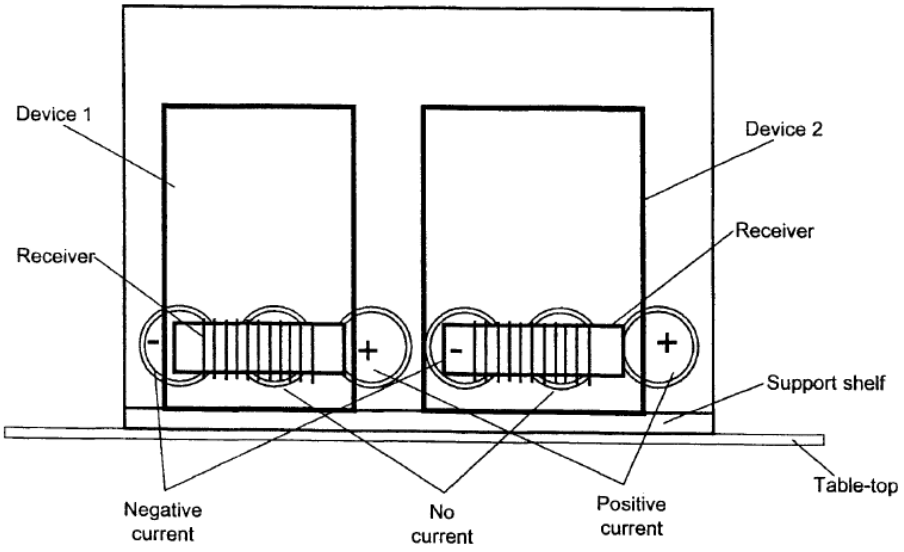

The charger can be configured "in the form of a shelf" so the device stands slightly titled back and upright on a ledge so that "there is **always alignment in one dimension**" with the "receiver positioned in the portable device a set distance away from the bottom edge." (Ex.1005, 11:45-51; *id*., 11:46-55, 12:12-14.) Accordingly, the charger includes an alignment mechanism for positioning the receiver "**in a power transfer position**" since it ensures a device is positioned "**proximate to the charger surface**" for receiving power transferred from the charger's coil(s), and aligned with the receiver's coil(s). (Ex.1002, ¶176.) Thus, in at least this configuration, *Fells* discloses the "**charger**" including a "**means for positioning**" (*e.g*., support shelf/ledge is a physical mechanism/means to assist user alignment of the device(s) on the charger). (*Id*., ¶¶175-176; §VIII.)

To the extent a "means for positioning" is not disclosed, it would have been obvious to modify *Fells*' charger (flat pad or other configurations) with other forms of physical/visual mechanisms to assist such alignment. (Ex.1002, ¶177.) It was well known to use mechanical/magnetic/visual-based mechanisms to guide a user's placement of power receiving devices in an inductive charging system to maximize magnetic coupling and power transfer. (*Id*., ¶178; EX.1010, FIGS. 8-9, ¶¶0102-0103; Ex.1011, Abstract, FIGS. 1-4, 8, 11, 1:6-46, 2:14-4:62, 5:38-7:34, 10:46-12:35.)[8] A POSITA would have been motivated to consider and implement well-known mechanisms for aiding a user in aligning the mobile device(s) onto the charger of *Fells*' system (*e.g*., for flat pad, etc. configurations), given the guidance in *Fells* associated with the FIG. 23 configuration, and a POSITA's knowledge of the use and benefits of mechanical or visual aids for facilitating the same purpose. (*Id.*) Modifying *Fells*' charger configurations (whether one like FIG. 23 or others) with such known alignment aids would have provided benefits/advantages beyond the FIG. 23 shelf applications. (Ex.1002, ¶¶179-183.) Such a modification would have thus improved *Fells*' system by providing mechanisms (*e.g*., visual/magnetic/physical) that assisted users in aligning a mobile device receiver to the charger coil(s) to maximize magnetic coupling and power transfer. (*Id.*, ¶183)

[8] Exs. 1010-1011 demonstrate state-of-art knowledge.

A POSITA would have had the skills, knowledge, and rationale to implement such a modification while considering design tradeoffs and techniques/technologies with a reasonable expectation of success. (*Id.*, ¶184.) Indeed, such modification would have involved applying known technologies/techniques (*e.g.*, known alignment mechanisms (*e.g.*, Ex.1010) consistent with those taught by *Fells* (FIG. 23)) to yield the predictable result of providing an efficient inductive charging system consistent with that contemplated by *Fells*. (*Id.*) *KSR Int'l Co. v. Teleflex Inc.*, 550 U.S. 398, 416 (2007). (*See* §§IX.A.1(l)-(q).)

> **l) <u>1(l)</u>: the charger drive circuit is configured to drive the charger coil at one or more operating frequencies to inductively transfer power from the charger to the receiver when the receiver is positioned in the power transfer position, wherein when the receiver is positioned in the power transfer position, a tuned circuit, including the charger coil and the resonant capacitor of the charger drive circuit and the solenoid and the resonant capacitor of the receiver electronic circuit, has a resonant frequency that allows the charger to transfer the power to the receiver at the one or more operating frequencies;**

Fells (including as modified above) discloses/suggests this limitation. (Ex.1002, ¶¶185-189.) *Fells* discusses activating relevant charger coils based on receiver coil position. (§§IX.A.1(a)-(k); Ex.1005, FIG. 10, 8:57-9:16; FIGS. 11-12, 9:18-45.) The analysis in §§IX.A.1(e) and IX.A.1(k) demonstrates how *Fells* discloses a "**charger drive circuit**" configured to "**drive the** [one or more] **charger coil**[s]…**to inductively transfer power from the charger to the receiver when the**

receiver is positioned in the power transfer position." (*See* §§IX.A.1(a)-(d), 1(f)-(j).) Also demonstrated above is how the "**charger driver circuit**" includes a "**resonant capacitor**" used in providing an alternating voltage to selected one or more "**charger coil(s)**" (§IX.A.1(e)), and the receiver electronic circuit includes a "**solenoid**" and "**resonant capacitor**" that respectively work to allow the "**transfer [of] the power**" from the "**charger**" "**to the receiver**" (*id.*; §§IX.A.1(f)-(i)). (Ex.1002, ¶186.)

A POSITA would have understood based on the disclosures of *Fells* (§§IX.A.1(a)-(k)) that the "**resonance capacitor**" in the "**charger**" would have caused the "**charger driver circuit**" to "**drive the charger coil at one or more operating frequencies to inductively transfer power**" to the mobile device receiver (§IX.A.1(e); Ex.1002, ¶187.) Indeed, consistent with that known in the art, *Fells'* resonant capacitor allows the charger to efficiently transfer power in the system that provides an operating frequency via the voltage source used in the charger's "drive[r] circuit." (§IX.A.1(e); Ex.1005, 9:46-67, 13:53-14:14.) A POSITA would have thus understood that the power is transferred from the charger to the receiver at the resonant frequency for efficiency. (*Id.*, Ex.1002, ¶188; Ex.1005, 8:33-41.)

Fells' system operates such that "**a tuned circuit**" is formed from the "[selected/activated] **charger coil[s] and the resonant capacitor of the charger**

drive circuit" (§IX.A.1(e)) "**and the solenoid and the resonant capacitor of the receiver electronic circuit**" (§§IX.A.1(f)-(j)) which "**has a resonant frequency that allows the charger to transfer the power to the receiver at the one or more operating frequencies**" as claimed. (Ex.1002, ¶189.) Indeed, the receiver circuit has a resonant capacitor that is "resonant at the oscillator frequency" of the charger's resonant capacitor circuit (thus forming a "**tuned circuit**"). (*Id.*; §§IX.A.1(f)-(j); Ex.1005, 9:46-67, 25:40-26:32 ("primary unit and secondary device having a resonant frequency" (*e.g.*, tuned circuit), driver circuitry with switching/variable impedance circuitry that can be "adjusted to affect the resonant frequency of the system" (claim 21), and control circuitry controlling "switching circuitry" to "selectively activate a field generator" (*e.g.*, charger coil) "to transfer power inductively to the secondary device (*e.g.*, mobile device) (claim 22), where the control circuitry "maintains inductive power transfer at or near the resonant frequency" (claim 23).) (*Id.*, 22:37-23:26, 23:57-24:40, 24:63-25:33, 25:12-15; *see* §§IX.A.1(m)-(q).)

m) <u>1(m)</u>: the charger coil includes a conductor patterned to include multiple, substantially concentric turns for generating a magnetic flux through a first end of the solenoid when the receiver is placed in the power transfer position, wherein an outermost of the concentric turns defines a perimeter of a charger coil area;

Fells (including as modified above) discloses/suggests this limitation. (Ex.1002, ¶¶190-195.) The "**charger coil(s)**" can be planar-spiral coils, which includes a "**conductor patterned to include multiple, substantially concentric turns**." (§IX.A.1(c); Ex.1005, 10:26-36, FIGS. 16-17, 11:45-64; §§IX.A.1(a)-(l).) As exemplified below, "**an outermost of the concentric turns**" of the conductor in a charger coil "**defines a perimeter of a charger coil area**" as claimed. (Ex.1002, ¶¶191-193; *e.g.*, Ex.1005, FIGS. 16-17, 23 (annotated-below).)

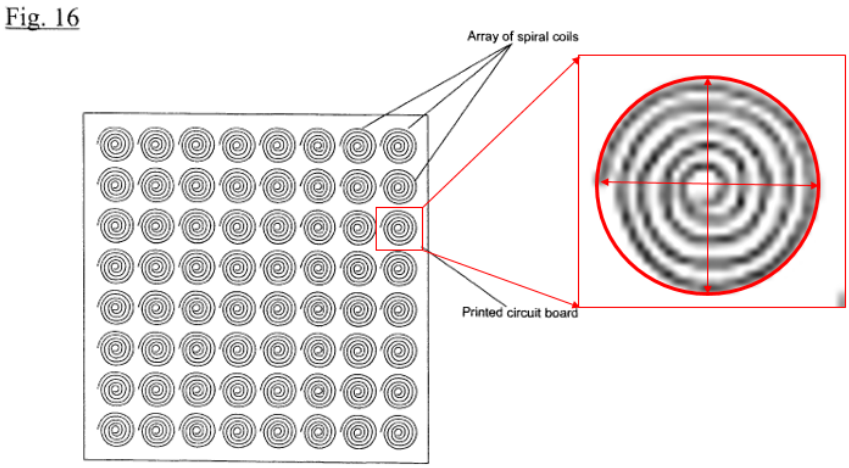

Fig. 17

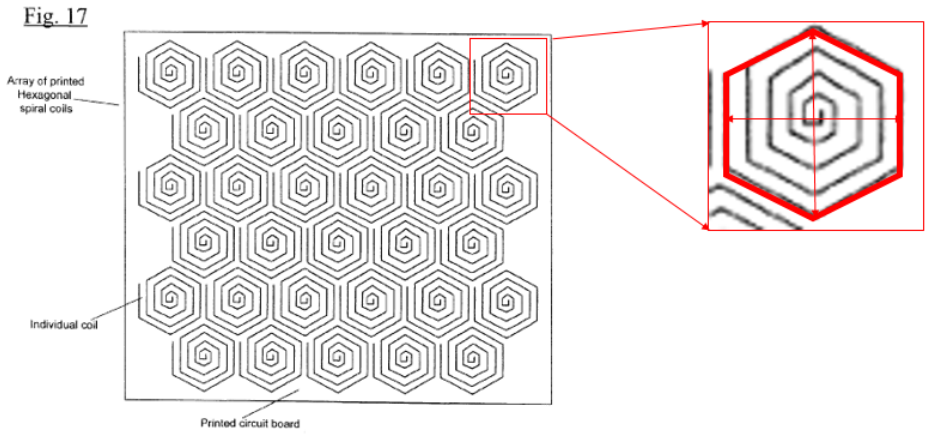

Fig. 23

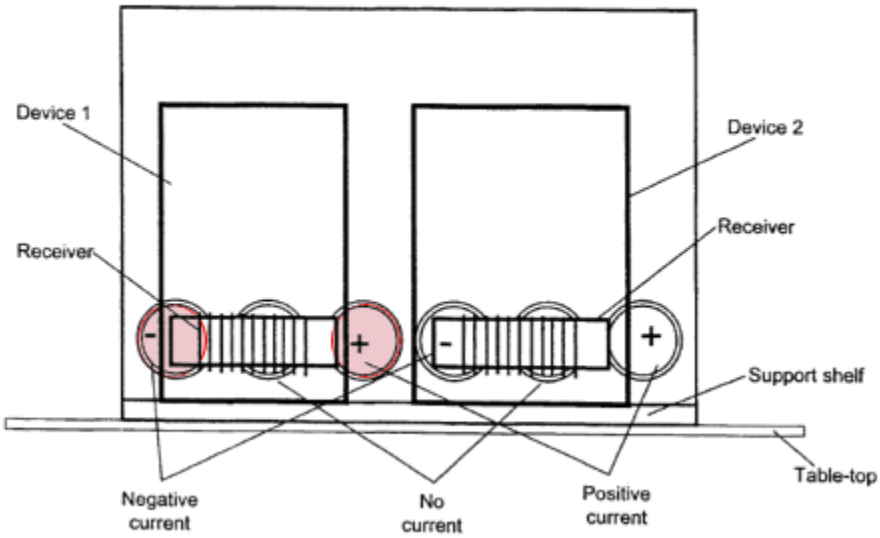

Such charger coil(s) "**generat[es] a magnetic flux through a first end of the solenoid when the receiver is placed in the power transfer position**. (Ex. 1002, ¶194; §§IX.A.1(c), IX.A.1(f)-(l); Ex.1005, FIG. 2, 1:55-57 ("flux"), 2:17-20, 2:54-56, 3:26-28, 3:51-53, 4:12-16, 5:15-16, 5:37-42, 5:61-64, 11:61-12:2, 14:57-65 ("magnetic flux"), 15:49-54, 16:29-36, 17:9-17, 17:53-62, 18:29-35, 19:9-17, 19:62-

20:2, 20:47-51, 21:4-18, 22:37-45 ("primary unit comprising: power transfer surface capable of enabling inductive coupling with said secondary device…").) *Fells* explains how different charger coils can be activated such that magnetic flux flows through the end of the mobile device's receiver, which occurs whether the charger coils are configured as planar spiral-type coils or other configurations. (Ex.1005, FIGS. 2, 5, 8 (below), 23 (annotated-below), 1:3-6:3, 6:56-8:9, 10:26-11:8, 11:26-12:19; *see id.*, 8:10-10:25, 11:9-25, 13:26-22:35; Ex.1002, ¶195; §§IX.A.1(n)-(q).)

Fig. 23

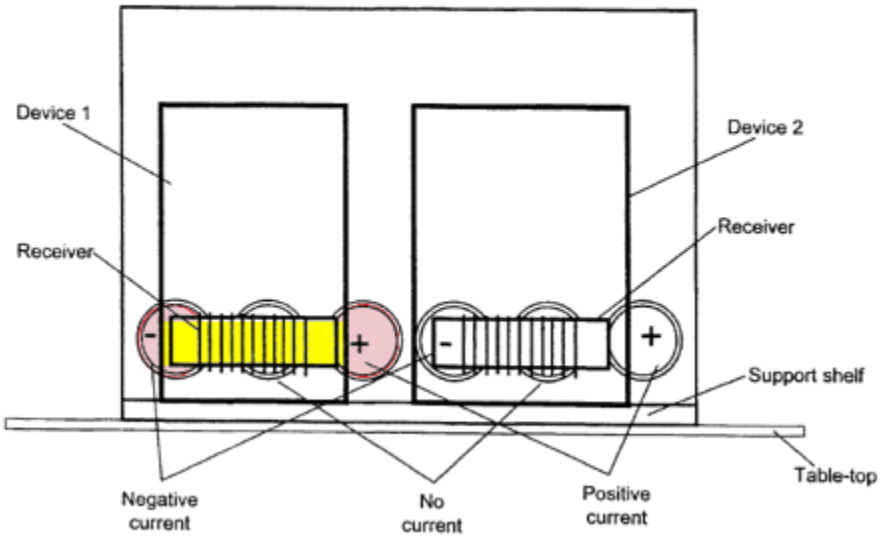

Fig. 2

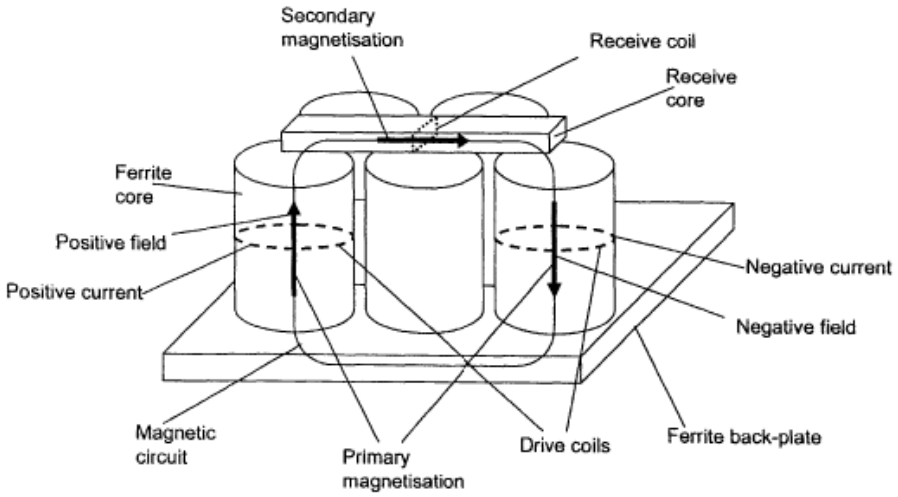
Secondary magnetisation
Receive coil
Receive core
Ferrite core
Positive field
Positive current
Negative current
Negative field
Magnetic circuit
Primary magnetisation
Drive coils
Ferrite back-plate

Fig. 5

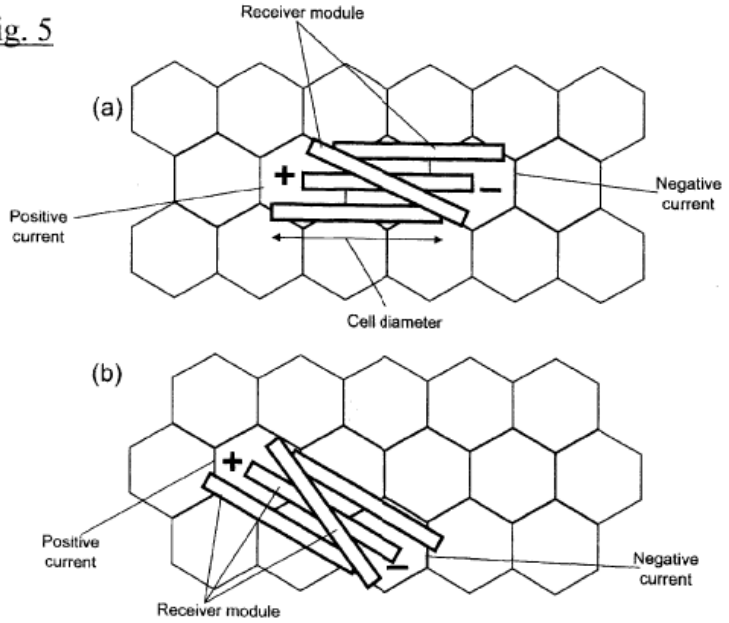
Receiver module
(a)
+
−
Positive current
Negative current
Cell diameter
(b)
+
−
Positive current
Negative current
Receiver module

Fig. 8

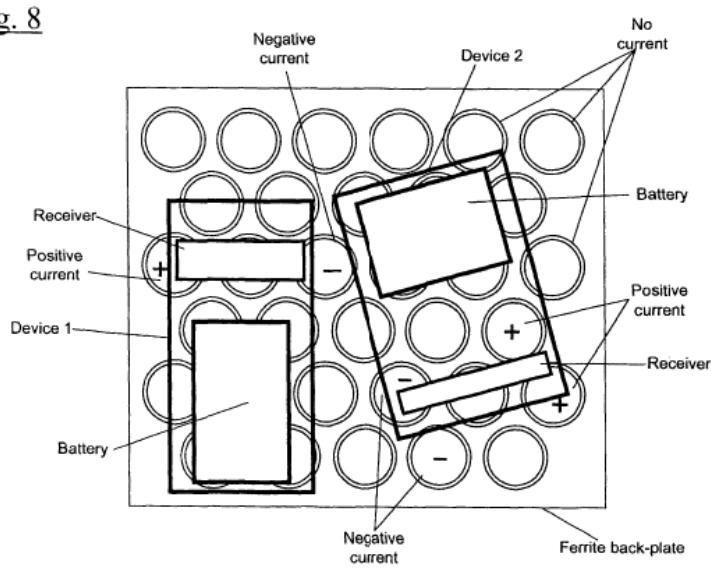

n) <u>1(n)</u>: the multiple concentric turns, when driven by the charger drive circuit, generate a magnetic field that is substantially perpendicular to the charger surface at a geometric center of the charger coil area,[9]

Fells (including as modified above) discloses/suggests this limitation. (Ex.1002, ¶¶196-201.) Each activated charger coil in *Fells*' charger is "**driven by the charger drive[r] circuit**" in accordance with the various configurations contemplated by *Fells*, including those employing planar spiral coils with "**substantially concentric turns**." (§IX.A.1(1)-(m); §§IX.A.1(a)-(k).) When driven, "**a magnetic field that is substantially perpendicular to the charger surface**" is generated. (Ex.1002, ¶197.) For instance, consistent with that discussed

[9] The plain language only requires ***a*** perpendicular magnetic field at the geometric center (not all fields).

above (§§IX.A.1(a)-(m)), *Fells* describes configurations where power is transferred "from a primary unit to a secondary device...by electromagnetic induction" where the primary unit comprises "***a power transfer surface***" ("charger surface") and "a plurality of field generators" (*e.g.,* charger coils) that are "each able to generate a field ***substantially perpendicular to the power transfer surface***." (Ex.1005, 1:41-49.) "[***M]agnetic flux*** from at least one field generator flows through the secondary coil, supplying power to secondary device." (*Id.*, 1:55-57; *id.*, 6:66-7:1 ("[c]urrent is applied to the coils so as to generate a magnetic field in a direction perpendicular to the charging surface").)

FIG. 2 illustrates how a magnetic field (e.g., "positive field") flows through the center of a charger core/coil in a perpendicular direction to the surface of the charger. (Ex.1005, FIG. 2 (below), 7:9-21; Ex.1002, ¶198)

Fig. 2

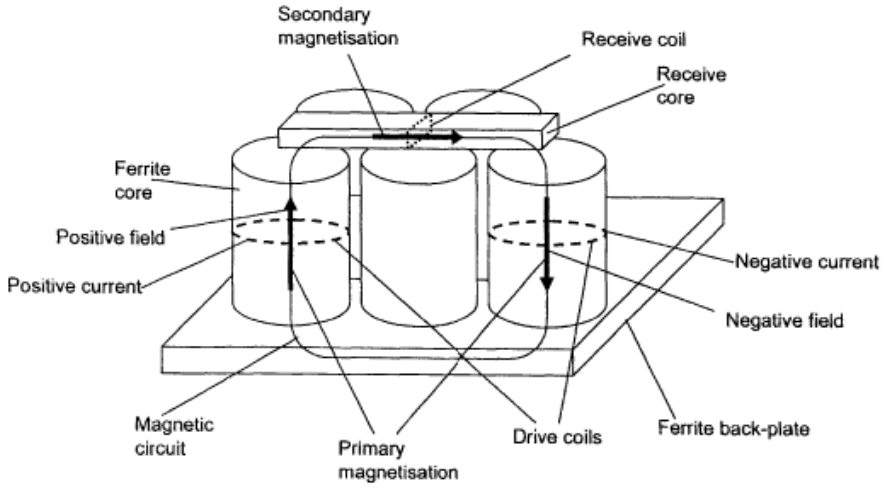

A POSITA would have understood planar-spiral type charger coils (as taught by *Fells*) would likewise generate magnetic field lines substantially perpendicular to the charger surface and through the geometric center of the coil, similar to a loop coil. (Ex.1002, ¶¶199-200; Ex.1012 (state-of-art knowledge), 559 ("magnetic field at the center of [a wire] loop is perpendicular to the plane of the loop"), 558-559, FIG. 30-4, 562, FIG. 30-8, 563-564, 592.)

Fig. 30-4 Magnetic field produced by a current in a circular loop of wire. The magnetic field at the center is at right angles to the plane of the loop.

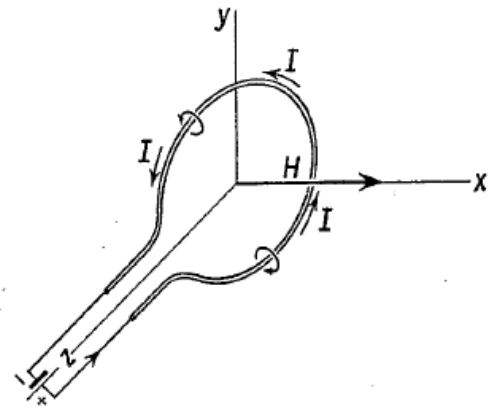

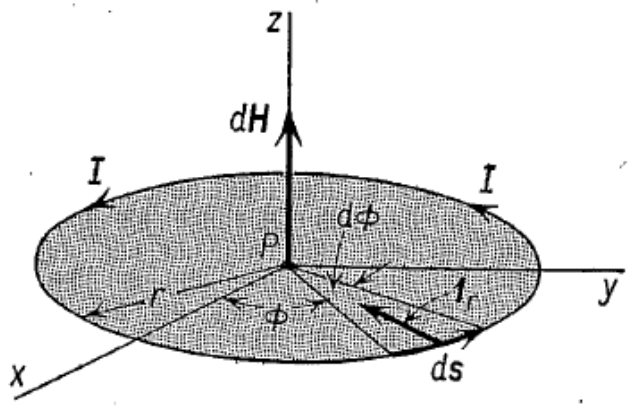

Fig. 30-8

Accordingly, a POSITA would have understood that each of the planar-spiral charger coils in *Fells*' charger would generate a magnetic field "**at a geometric**

center of the charger coil area" substantially perpendicular to the coil/charger surface, consistent with conventional planar-spiral coils. (*Id.*; Ex.1002, ¶201 (discussing Exs. 1013-1015, demonstrating state-of-art knowledge); §§IX.A.1(o)-(q).)

o) <u>1(o)</u>: the charger coil area is larger than an area of the first end and larger than an area of the second end of the magnetic core of the solenoid;

Fells (including as modified above) discloses/suggests this limitation. (Ex.1002, ¶¶202-212; §§IX.A.1(a)-(n).)

As explained, *Fells* discloses various power transfer system configurations/applications. (§§IX.A.1(a)-(l).) *Fells* discusses many aspects relating to such configurations (Ex.1005, 1:50-6:3, 14:36-22:33), including *e.g.*, varying gap spacing (*id.*, 7:16-21), coil-receiver configurations (*id.*, 7:22-24 (coils can have a diameter and height of 12.7mm with 15mm pitch, and 25mm long receiver), 10:60-11:44 (exemplary receivers), 12:15-19), charger configurations (*id.*, 11:45-12:8, 13:14-14:31), dimensional relationships (*id.*, 7:31-8:9), and different components, functionalities, and combinations thereof (*id.*, 8:42-56, 12:66-13:22, 13:23-22:33).

As noted, the claimed "**solenoid**" may be shaped as a "blade or thin solenoid." (§IX.A.1(g); Ex.1001, 2:30-31, 2:54-55, 8:63-65, 9:21-27, 21:65-22:2, 2:58-63, FIGS. 7, 9-10.) *Fells* discloses similar types of a "solenoid" that include two ends.

(§IX.A.1(g); Ex.1005, FIGS. 1(a), 19(a)-(b), 21, 6:57-7:7, 10:60-63, 11:9-21.) *Fells* explains that the "coils themselves could physically be a range of different structures" and exemplifies that "[d]imensions which give good performance for powers of 2-5 W are: ***a power receiver which is 30 mm long with a cross section of 2 mm x 6 mm***; and a ***charging surface with a cell diameter of 15 mm***." (Ex.1005, 7:37-42.) A POSITA would have understood such dimensions to reflect a charging cell having a cylindrical shaped coil (since it has a surface cell "diameter"), and a power receiver "solenoid" with a magnetic core having rectangular shaped ends (given its "cross section" with length/width). (Ex.1002, ¶¶204-208; Ex.1005, FIGS. 1(a), 16-17, 19(b), 21(a), 23 (below); §§IX.A.1(c), IX.A.1(f)-(i), IX.A.1(m)-(n).)

Fig. 1

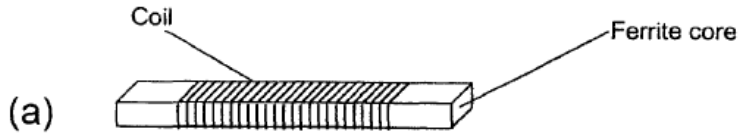

Fig. 19

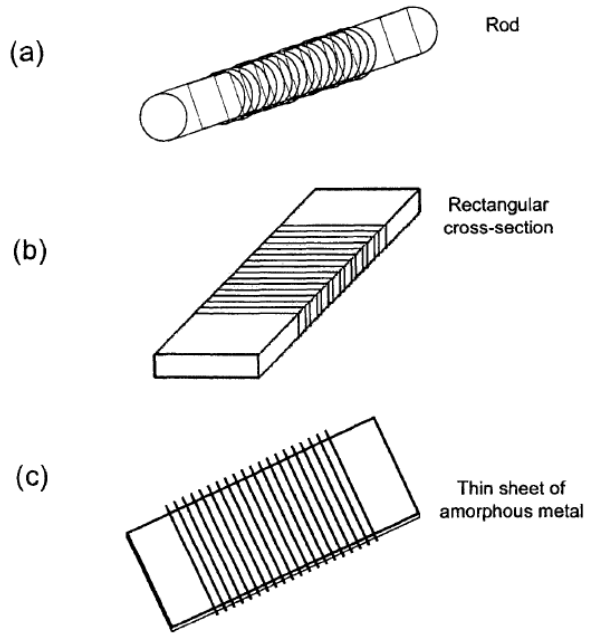

Fig. 21

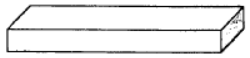

Cuboid core

(a)

Fig. 16

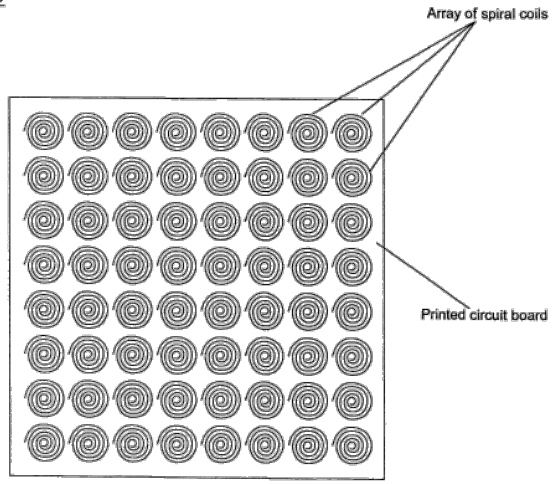

Fig. 17

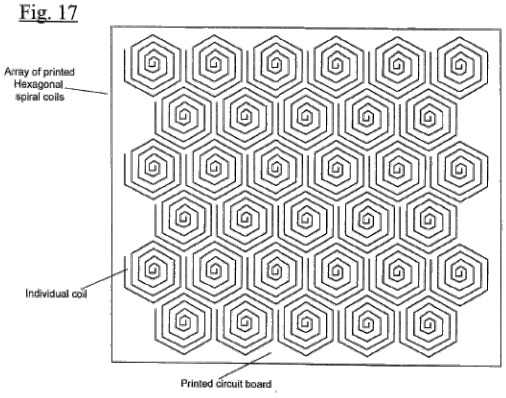

Fig. 23

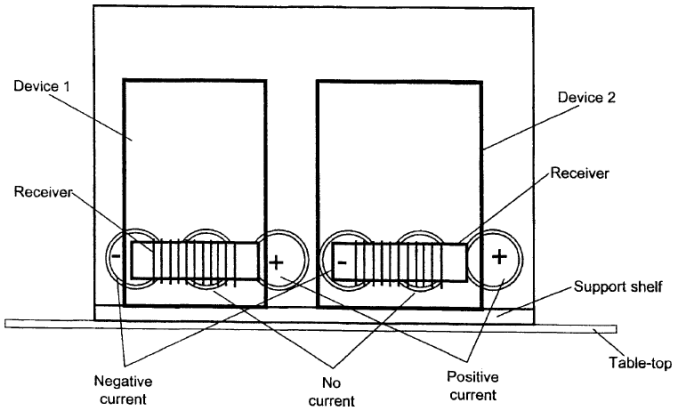

Thus, a POSITA would have understood an exemplary circular shaped charging cell (spiral coil) with a 15mm diameter (7.5mm radius) has a ~176.6mm^2 area (area=πr^2). Likewise, the ends of the magnetic core of the solenoid in the

exemplary power receiver have an area of 12mm^2 (2mm by 6mm).[10] (Ex.1002, ¶209.) Accordingly, *Fells* discloses configurations where "**the charger coil area**" in (§§IX.A.1(b)-(c), (m)-(n)) (*e.g.,* ~176.6mm^2) "**is larger than an area of the first end and larger than an area of the second end of the magnetic core of the solenoid**" (*e.g.,* ~12mm^2 each). (Ex.1002, ¶209.)

Nonetheless, to the extent *Fells* does not expressly disclose such features (*e.g.*, dimensions for both magnetic core ends (including rod/cylindrical shaped solenoid magnetic cores)), it would have been obvious to a POSITA to configure/implement a receiver solenoid having a magnetic core with ends having an area smaller than the charging coil. (Ex.1002, ¶210.) A POSITA would have been motivated to consider and implement such receiver solenoid magnetic cores (whether rod/cylindrical or rectangular/cuboid shaped, etc.) to be consistent with configurations contemplated by *Fells*. (*Id.*; *see* citations/discussions above.) A POSITA had reasons to consider and implement various types of components, having various dimensions, given *Fells* contemplates variations in the types of materials/sizes/arrangements/applications, and the like in the inductive charging system, as noted above. (Ex.1002, ¶210.) Moreover, a POSITA would have recognized how *Fells* figures

[10] A cuboid-shaped magnetic core (Ex.1005, FIGS. 19(b), 21(a)) would have equal opposite faces—a known property of a cuboid. (Ex.1002, ¶209.)

exemplify/depict/suggest receiver cores having ends with widths smaller than charging cell sizes. (*E.g.,* Ex.1005, FIGS. 5-8, 18. 23 (below).)

Fig. 5

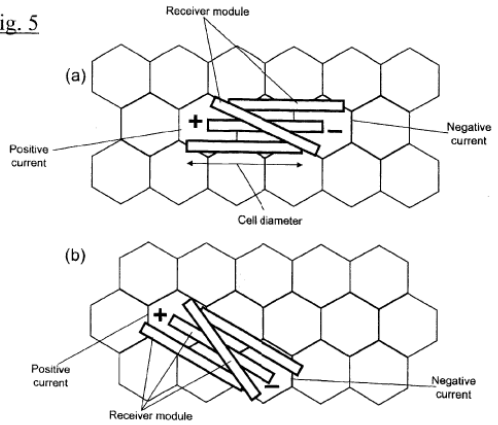

Fig. 6

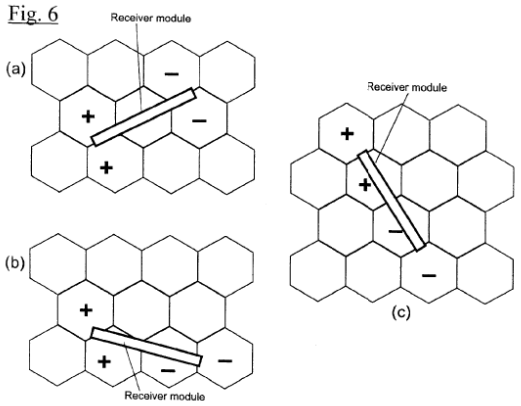

Fig. 7

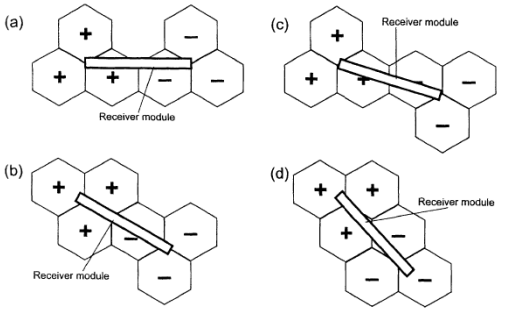

Fig. 8

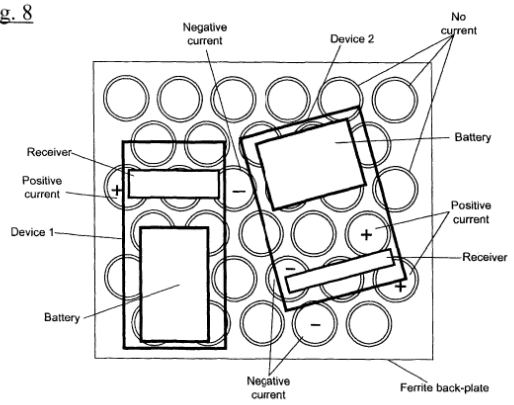

Fig. 18

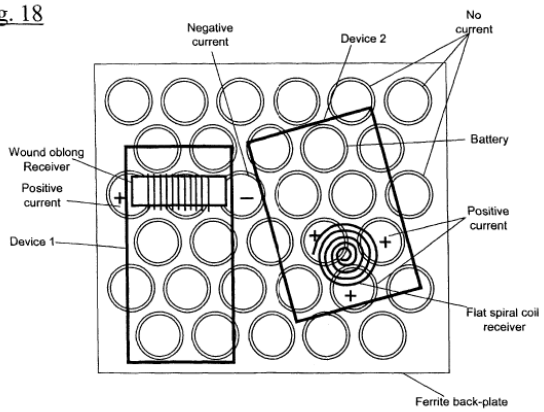

Fig. 23

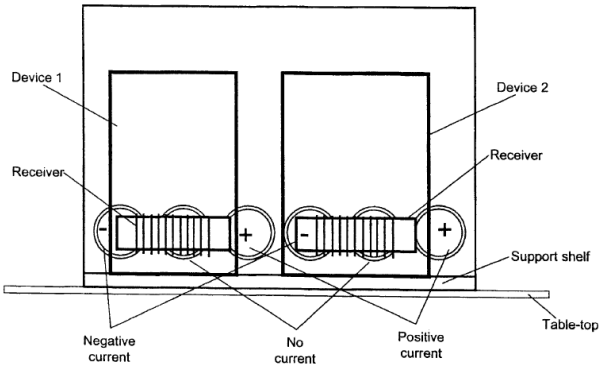

While such figures are exemplary and do not expressly convey precise receiver/magnetic core dimensions, a POSITA would have been guided by such depictions in context of *Fells*' other teachings providing exemplary dimensions (*supra*; Ex.1005, 7:9-42), to consider designs that track similar area relationships disclosed in *Fells* (*e.g.,* Ex.1005, 7:38-42) that would have resulted in dimension/area relationships like those recited in limitation 1(o). (Ex.1002, ¶211.) In light of such teachings/suggestions, a POSITA would have been motivated to consider and implement various types of magnetic cores for the receiver's solenoid (§§IX.A.1(f)-(h)) including those having ends with an area smaller than the charging cell area (§IX.A.1(c), 1(l)-(o)).

A POSITA would have had the skills, knowledge, and rationale to implement such a configuration, while taking into account design tradeoffs and techniques/technologies associated with the configurations, and done so with a reasonable expectation of success. (Ex.1002, ¶212.) Indeed, implementing the above-modification would have involved applying known technologies/techniques (*e.g*., known shaped/sized magnetic receiver cores and planar charging coils) to predictably provide an inductive charging system configured to provide power transfer functionalities for given applications, consistent with those discussed by *Fells*. (*Id.*.) *KSR*, 550 U.S. at 416. (§§IX.A.1(a)-(n), IX.A.1(p)-(q).)

p) <u>1(p)</u>: the magnetic layer of the charger extends beyond the charger coil area; and

Fells (including as modified above) discloses/suggests this limitation. (Ex.1002, ¶¶213-217.) As explained, *Fells* discloses a "**magnetic layer**" (§IX.A.1(d)). While *Fells* does not expressly state the size/dimensions of the magnetic backplate, *Fells* shows backplate examples that are clearly beyond the charger coil area (*i.e.*, the area of a single coil). (Ex.1005, FIG. 1(b) (below), 6:57-63, FIG. 2 (below), 7:9-21, FIG. 3, 7:25-29.) (Ex.1002, ¶¶214-215.)

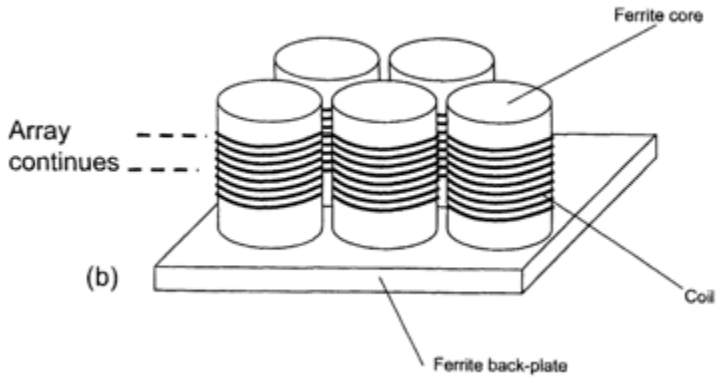

<u>Fig. 2</u>

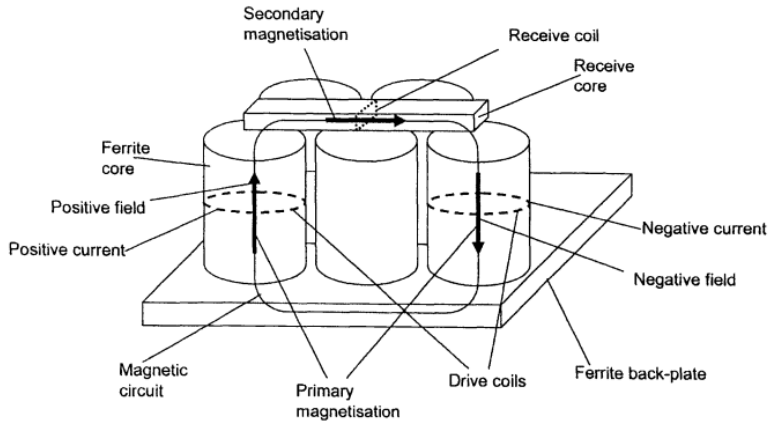

Fig. 3

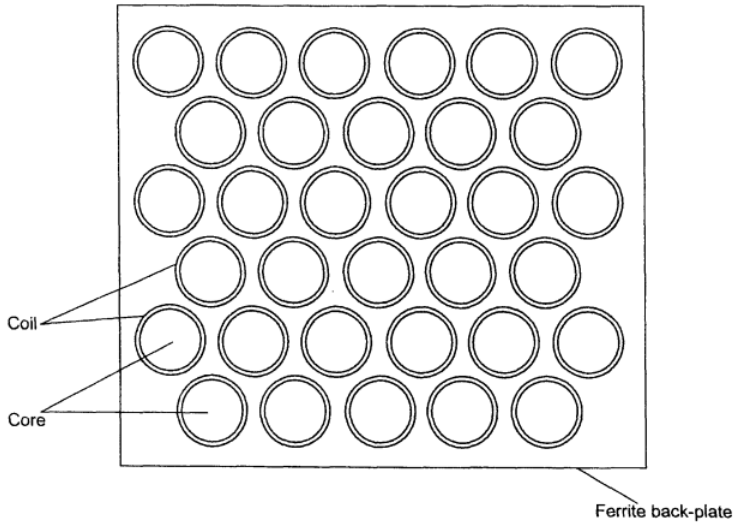

To the extent not evident or disclosed, it would have been obvious to a POSITA to consider and implement a ferrite back-plate that extends beyond the "charger coil area" (§IX.A.1(m)-(o)) to ensure the charger coil(s) has a magnetic layer to "complete the [magnetic] circuit" that is "formed when the power receiver is placed on the charging surface" including the charger coil(s), consistent with that discussed by *Fells.* (Ex.1005, 7:9-16; Ex.1002, ¶216.) Such a modification would have been a predictable application of *Fells*' teachings and configurations that would have been within the capabilities, knowledge, and skills of a POSITA and motivated by the teachings/suggestions in *Fells.* (Ex.1002, ¶217.) In light of such guidance and a POSITA's knowledge/skills, a POSITA would have had a reasonable expectation of success that implementing such a modification would have resulted

in an inductive power transfer system that operated as intended/consistent with that contemplated by *Fells*. (*Id.*) *KSR*, 550 U.S. at 416. (§§IX.A.1(a)-(o), IX.A.1(q).)

> q) **<u>1(q)</u>: when the receiver is in the power transfer position, the first end of the magnetic core is located proximate to the charger coil area above the charger surface to receive magnetic flux from the charger coil area and guide the magnetic flux in a closed magnetic loop from the charger coil area through the solenoid and return through the charger magnetic layer to the charger coil area to form the closed magnetic loop.**

Fells (including as modified above) discloses/suggests this limitation. (Ex.1002, ¶¶218-224; §§IX.A.1(a)-(p).) Section IX.A.1(k) explains how the charger includes an alignment mechanism/means for positioning the receiver "**in a power transfer position**" to ensure the mobile device is positioned "**proximate to the charger surface**" for receiving power transferred from the charger's coil(s). (Ex.1002, ¶219.) A POSITA would have understood in light of *Fells'* teachings (§§IX.A.1(a)-(p)), that when the receiver is in the "**power transfer position**," inductive power transfer takes place between charger coil(s) and a receiver coil, consistent with that known in the art, resulting in magnetic flux flowing between the charger coils and the magnetic core of the receiver solenoid. (*Id.*; Ex.1002, ¶219.)

Indeed, regarding FIG. 2 (below), *Fells* explains how a "magnetic circuit [is] formed when the power receiver is placed on the charging surface" such that "[a] coil in proximity to ***one end of the receiver*** is driven with current in a positive sense and a coil in proximity to the ***other end*** is driven in a negative sense," where "[t]he

field is concentrated in the ferrite and forms a magnetic circuit from the first coil, through the receiver core, through the second coil and through the ferrite backplate to complete the circuit." (Ex.1005, 7:9-21.)

Fig. 2

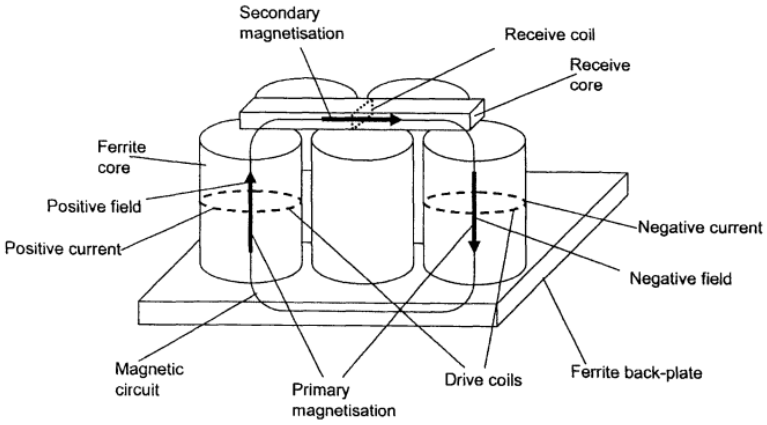

Similarly, *Fells* explains that "[a] ***ferrite back-plate*** may be used behind the vertical cores to ***act as a flux return path***, and this improves the coupling factor." (*Id.*, 11:65-12:2; *see also* §IX.A.1(m) (discussing "magnetic flux"); Ex., 1005, 1:3-6:3 (*e.g.,* 1:55-57 ("magnetic flux from at least one field generator flows through the secondary coil, supplying power to secondary device")), 6:56-8:9, 10:26-11:8, 11:26-12:19, 14:57-65, 15:49-54, 16:29-36, 17:9-62, 18:29-35, 19:9-17, 19:62-20:2, 20:47-51, 21:4-18); §IX.A.1(h); Ex.1002, ¶221; Ex.1009, 51; Ex.1012, 592 (discussing magnetic flux).)

A POSITA would have thus understood the similar operation/characteristics would occur between the planar charger coils and the solenoid's magnetic core in a

receiver placed proximate to the charger coil(s) in context of the above-discussed configurations of *Fells*. (Ex.1002, ¶222; Ex.1005, FIGS. 4-8, 16-18, 23, 7:31-8:11, 10:26-58, 11:45-12:8; §IX.A.1(m) (different charger coils can be activated such that magnetic flux flows through the end of the device's receiver (and its solenoid's magnetic core), even with planar spiral-type charger coils); §IX.A.1(h).)

A POSITA would have understood there is a flux path from a first activated charger coil (*e.g.*, "-") through the receiver's core and solenoid, to another activated charger coil (*e.g.,* "+") and through the backplate to the first activated coil forming a "**closed magnetic loop**" like that claimed to "complete the magnetic circuit." (Ex.1005, 7:9-16, 7:31-36, FIGS. 2 (above), 4 (below).) (Ex.1002, ¶223.)

Fig. 4

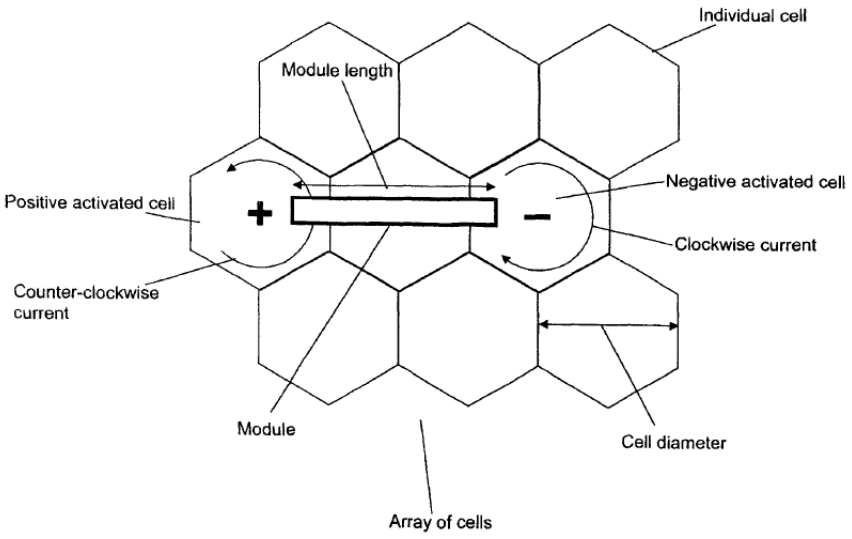

Accordingly, *Fells* discloses/suggests "**when the receiver is in the power transfer position**" (§IX.A.1(k)), "**the first end of the magnetic core**" (of the receiver solenoid (§§IX.A.1(f)-(h), IX.A.1(o)) "**is located proximate to the charger coil area above the charger surface to receive magnetic flux from the charger coil area**" (*see* discussions above; §§IX.A.1(m)-(o)) "**and guide the magnetic flux in a closed magnetic loop from the charger coil area through the solenoid and return through the charger magnetic layer to the charger coil area to form the closed magnetic loop**" (*supra*; §§IX.A.1(m)-(p)), as claimed. (Ex.1002, ¶224.)

2. Claim 17

a) The system of claim 1, wherein: the receiver and the charger include communication and control electronics circuits to communicate, between the receiver and the charger, information associated with the transfer of power to the first mobile device; and

b) the communication is through a charger antenna that includes the charger coil and a receiver antenna that includes the solenoid.

Fells discloses/suggests these limitations. (Ex.1002, ¶¶225-231.) In addition to the reasons discussed above for claim 1 (§IX.A.1), the charger and receiver in the above-described *Fells* "system" each include electronic circuits that communicate and control the communication of information associated with the transfer of power to the mobile device. (Ex.1002, ¶226.) *Fells* describes implementations involving

exchanging information between the charger and mobile device to control the transfer of power. (Ex.1005, 10:55-59 ("[i]t may be necessary for the portable device to communicate what type of receiver it is to the charger, so that the charger can correctly determine which coils should be activated and with what polarity configuration").) *Fells* also explains the positioning of a receiver coil can be accomplished by "***[i]nductive communications using the primary and secondary coils***" where, for example the secondary coil "***has dual use as an RFID tag antenna, and the position is detected using the RFID channel***." (Ex.1005, 12:20-22, 12:37-40.) A POSITA would have understood that in such a configuration electronic circuitry associated with the secondary coil ("**solenoid**") in the mobile device (e.g., circuitry included in the circuits described for *e.g.,* FIG. 14) would form a "**communication and control electronic circuit**" in the "receiver." (Ex.1002, ¶227; §IX.A.1(f)-(j).) Such circuitry would work with the receiver's coil ("**solenoid**") in the same way *Fells* discloses (*id.*; Ex.1005, 9:64-10:12), but where the secondary coil has "***dual use as an RFID tag antenna***" that would communicate with the charger "over the RFID channel" formed by "inductive communications using the primary and secondary coils" for purposes of sensing location/position of the "receiver coil." (Ex.1005, 12:20-22, 12:37-40.) The communication necessarily includes "**information associated with the transfer of power to the first mobile device**" given the location of the receiver coils is used by the charger to activate

selected coils. (§§IX.A.1(a)-(g); Ex.1005, 1:41-6:3, 6:56-9:45, 12:60-61 ("[t]he ***position of the secondary is sensed and then power is transferred by switching on the appropriate primaries***"), 12:61-13:25.)

A POSITA would have understood that by use of an "RFID channel" with the secondary coil "antenna," that *Fells*' necessarily discloses the primary coil has dual use as an "antenna" to communicate information over the channel. (Ex.1002, ¶228; Ex.1005, 12:37-40.) Such understanding would have been consistent with the knowledge that an inductor coil that transmits information is an antenna. (*Id*.)

To the extent such features are not disclosed, a POSITA would have been motivated, and found it obvious, to configure the *Fells* system to utilize the charger coil as an antenna to facilitate the exchange of information over the "RFID channel" like the mobile device's secondary coil ("solenoid"). (Ex.1002, ¶229.) A POSITA would have found it obvious to implement such features given, in such a configuration explained by *Fells*, the electronic circuitry associated with the charger coil(s) in the charger activate and control coil(s) to transfer power to the mobile device coil (e.g., circuitry included in the circuits described for *e.g.,* FIGS. 9, 12-13, 23, 26) would form a "**communication and control electronic circuit**" in the "**charger**" for reasons similar to that discussed above. (*Id*.) Such circuitry would have worked with the charger coil(s) in a similar way described by *Fells* (§§IX.A.1(b)-(e), IX.A.1(k)-(q)), where the charger coil also operates as an "RFID

channel" to communicate with the secondary coil (having "dual use as an RFID tag antenna") for sensing location/position of the "receiver coil" and facilitating transfer of power to the mobile device (Ex.1005, 12:20-22, 12:37-40, 12:60-61.) Thus, a POSITA would have been motivated to configure the charger coil to have "dual use" as an antenna to receive information regarding the mobile device receiver coil position consistent with *Fells*. (Ex.1002, ¶229.)

A POSITA had reasons to consider such a predictable configuration given *Fells* describes the exchange of information between the charger and mobile device to control the transfer of power. (*E.g.,* Ex.1005, 12:41-43 (sensing method 6 where tuned resonator features are used between the coils), 10:55-59; Ex.1002, ¶230.) In such a configuration, a POSITA would have understood the communication between the charger and mobile device receiver are "**through a charger antenna that includes the charger coil and a receiver antenna that includes the solenoid**" as claimed since the coils are used to provide the RFID channel (and *Fells* refers to the secondary coil as an RFID antenna (Ex. 1005, 12:39)) and the secondary coil forms the "**solenoid**" (§IX.A.1(f)-(i)) and the charger coil would form the "**charger antenna**" to receive such RFID communication information (§IX.A.1(b)-(c)). (Ex.1002, ¶231.)

B. Ground 2: Claim 8 is obvious over *Fells* in view of *Silva* and *Jung*

1. Claim 8

a) The system of claim 1, wherein the Litz wire is selected for operation at a frequency of greater than 205 kHz.

Fells in view of *Silva and Jung* discloses/suggests this limitation. (Ex.1002, ¶¶232-245; §§IX.A.1.)

As explained, *Fells* discloses the receiver "solenoid" comprises a "Litz wire wrapped around a section of the magnetic core." (§IX.A.1(i).) While *Fells* does not expressly state the Litz wire is selected for operation at a frequency greater than 205 kHz, it would have been obvious to configure *Fells*' system to use such a Litz wire in view of the teachings/suggestions of *Silva* and *Jung*. (Ex.1002, ¶233.)

Fells discloses different aspects relating to the system, including coil/receiver/solenoid/charger configurations, dimensions, components, etc. (§§IX.A.1(a), IX.A.1(o); Ex.1005, FIGS. 1(a), 19(a)-(b), 21, 1:50-6:3, 6:57-7:7, 7:16-8:9, 8:42-56, 10:60-11:44, 12:66-13:22, 13:23-22:33.) (*See* §§IX.A.1(b)-(n), IX.A.1(p)-(q); Ex.1002, ¶234.) A POSITA thus had reasons to consider various components to accommodate *Fells*' contemplated implementations, and would have known how to, and been capable of, designing/implementing an inductive power transfer system including selecting particular components depending on the application. (Ex.1002, ¶234.) Those choices include the wire for the receiver's "solenoid." (*Id.*)

A POSITA was aware of the properties/design characteristics associated with coils in inductive power transfer systems, including how material type and dimensions affect such a system's operation. In particular, a POSITA would have understood the selection/properties of Litz wire as disclosed by *Fells* (Ex.1005, 7:3-8; §IX.A.1(i)) in a power transfer system. (Ex.1002, ¶¶235-241.) *Silva* demonstrates a POSITA's knowledge relating Litz wire.

Namely, *Silva* recognized that "electronic components…utilize wires or cables to carry voltage and/or current" that "may be constructed from a conductive material (e.g., copper)" that has "a resistance to current flow that may contribute to power loss." (Ex.1019, 1:14-21.) "Therefore, it may be desirable to minimize the power loss in the conductors in order to provide more efficient components." (*Id.*, 1:21-23.) *Silva* explains that eddy currents formed by AC current in components increase resistance proportional to the "frequency of current" (called "skin effect"). (*Id.*, 1:24-41.) "Skin depth" was also a known property that was also "appreciated" at the time. (*Id.*, 1:34-53.) *Silva* notes that a "***litz wire***" was "***used to mitigate the skin effect for current with relatively high frequencies, such as a few kilohertz, a few megahertz, or more***." (*Id.*, 1:54-57.)

Silva discusses known characteristics of an exemplary "litz wire," such as a woven pattern of insulated wire strands causing equal distribution of current among them. (*Id.*, 1:57-63.) *Silva* teaches that "***the radius of the individual strands may***

be chosen to be less than a skin-depth for a particular application" to mitigate "skin effect loss." (*Id.*, 1:63-66; *see id.*, 1:66-2:3.) For example, "Litz wire may be used in the windings of high-frequency transformers, to increase their efficiency by mitigating both skin effect and…proximity effect." (*Id.*, 2:4-8.) As such, *Silva* teaches that the "weaving or twisting pattern of litz wire ***may be selected***" with a pattern, "allow[ing] the interior of the litz wire to contribute to the cable's conductivity." (*Id.*, 2:8-13.) While *Silva* recognizes some tradeoff between standard wires and litz wires, *Fells* teaches using Litz, and a POSITA would have appreciated the teachings/suggestions in *Silva* regarding configuring such litz wire for given applications (e.g., high frequencies). (*Id.*, 2:14-25, 4:26-30 ("relatively higher switching frequencies (e.g., 50 kHz to 300 kHz)"), 5:4-6 ("frequency...may be in the range of 10 kHz, 50 kHz, 250 kHz, and the like"); *see id.*, 2:29-42, 2:43-55, 2:56-63, 3:40-4:20, 5:27-6:46.) Indeed, *Silva* discloses that a POSITA would have "***appreciated that the gauge selected for the various stands of [a Litz wire] may be chosen dependent upon the frequency and magnitude of the current intended for the application***." (Ex.1019, 6:16-19.)

Silva's teachings are consistent with *Fells*. (Ex.1005, 7:4-8.) Thus, a POSITA had reasons to consider *Silva*'s guidance when contemplating the design/implementation of *Fells*' "receiver" (and its "solenoid"). (Ex.1002, ¶242; §§IX.A.1(f)-(j).) In light of the teachings/suggestions of *Silva* in context of *Fells*

(which contemplates high frequencies), a POSITA would have been motivated to select a Litz wire for operation at various high frequencies to accommodate given applications, including operation at a frequency "greater than 205 kHz," as claimed. (Ex.1002, ¶242.) Indeed, *Jung* confirms it was known to select Litz wire for a wireless charging coil operating at 100-250 kHz ("**a frequency greater than 205 kHz**").

TABLE 3

Comparison with Convention Litz Core

Items	Litz core	PSR PTPCB core	EGPL-PTPCB core
Material	Copper (99.99%)	Copper (70 μm) + PSR Coating	Copper (70 μm) + Electroless plating (0.03 μm)
Thickness	0.35 mm	0.4 mm	0.4 mm
Size	32 × 32 mm	32 × 32 mm	32 × 32 mm
Shape	Rectangular	Planar rectangular	Planar hexagon
Number of turns	20 (Litz shape)	24/(1Layer)	24/(2Layer)
Number of threads per turn	7	1	1
Thickness of wire	0.15Φ	1 mm/2 oz	1 mm/2 oz
Inductance	7.7 uH	11 uH	7.8 uH
Q (no shield)	27	9	20
DCR (Internal resistance)	230 mΩ	850 mΩ	350 mΩ
Efficiency@2.5 W (5 V × 500 mA)	61%	53%	60%
Temp@2.5 W (5 V × 500 mA)	40	42	40
Rate of change of inductance	1.5%	0.5%	0.5%
Operation frequency	100~250 kHz	100~250 kHz	100~250 kHz
Cost	Middle (Facility investment required)	Low	Middle (Facility investment not required)
Performance	Average	Average	Good

(Ex.1016, 15:1-25, Table 3 (annotated); *id.*, 2:4-14 (known use of Litz coil for "primary and ***secondary cores***"), 4:51-55, 11:63-67, 14:64-67, 15:28-34, 16:40-41.)

As with *Silva*, a POSITA had reasons to consider the teachings/suggestions of *Jung* in context of *Fells*. (Ex.1002, ¶243.) Indeed, *Jung* describes an inductive

power transfer system including techniques/technologies/configurations similar/related to those of *Fells.* (§§IX.A.1(a)-(q); Ex.1016, Abstract, FIGS. 1-18, 1:9-24; Ex.1002, ¶243.) Thus, *Jung* is in the same field of endeavor as the '349 patent and *Fells*. (Ex.1002, ¶243; Ex.1001, 1:53-58. 3:28-6:14; Ex.1016, Abstract, FIGS. 1-18, 1:9-23, 3:24-5:17, 6:22-8:67; §§IX.A.1(a)-(q) (regarding *Fells*).) Further, *Jung*, like *Fells*, discloses features that were reasonably pertinent to one or more problems the inventor for the '349 patent was trying to solve. (*E.g.*, Ex.1002, ¶243; Ex.1001, 1:53-2:38. 3:28-6:14; Ex.1016, 2:35-5:18; Ex.1005, 1:3-6:3; §§IX.A.1(a)-(q).) Similarly, as noted, *Silva* discloses features pertinent to known issues relating to the use of Litz wire for high frequency applications, consistent with *Fells.* A POSITA looking to address/solve such issues and others relating to the design/implementation of an inductive power transfer system, like that claimed and described by *Fells*, would have consulted such teachings. (Ex.1002, ¶243.) Thus, a POSITA would have consulted teachings/suggestions like those in *Jung*/*Silva*, and consequently been motivated to configure the above-discussed *Fells* system to select Litz wire for the "solenoid" (§§IX.A.1(g)-(i)) for operation at a frequency above 205 kHz. (*Id.*)

A POSITA would have been motivated, and found obvious, to implement such a modification to, *e.g.,* add versatility in the types of implementations contemplated by *Fells* (e.g., operations at relatively high frequencies) (Ex.1005, 7:3-

8, 13:9-19 ("each coil could have its own high frequency power MOSFET"), 9:64-67. (Ex.1002, ¶244.) Knowing that Litz wire can be used "***to mitigate the skin effect for current with relatively high frequencies***" (Ex.1019, 1:54-57) and "***may be chosen dependent upon the frequency and magnitude of the current intended for the application***" (*id.*, 6:16-19), and had been used for applications operating at frequencies, such as 100-250 kHz (Ex.1016, 15:1-27), a POSITA would have had the rationale, capabilities, skills, and reasonable expectation of success to select the Litz wire for the "solenoid" in *Fells*' receiver "for operation at a frequency of greater than 205 kHz." (Ex.1002, ¶244.)

The '349 patent's lack of disclosure regarding selecting *Litz* wire for operation at any particular frequency supports obviousness. (*See generally* Ex.1001; *id.*, 20:43-46 (only mention of "205 kHz" in context of WPC standard—not the claimed "solenoid").) "If this were so vital an element in the functioning of the apparatus, it is strange that all mention of it was omitted." *Graham v. John Deere Co. of Kansas City*, 383 U.S. 1, 25 (1966).

C. Ground 3: Claims 13, 15, and 16 are obvious over *Fells* in view of *Sagoo*

1. Claim 13

a) The system of claim 1, wherein, the charger is incorporated into a second mobile device;

Fells in view of *Sagoo* discloses/suggests this limitation 13(a). (Ex.1002, ¶¶246-263; §IX.A.1.)

Fells discloses no limits on the type of device into which the charger can be incorporated. (*See generally* Ex.1005.) The exemplary "aspect[s] of the invention" broadly describes a "primary unit" (e.g., charger) that includes a power transfer surface, field generators (e.g., charger coils), and other components. (*Id.*, 1:41-6:3, 14:42-22:13.) *Fells* explains that "[i]n any of the aspects disclosed here, the various features may be implemented in hardware, or as software modules," and the invention extends to "system aspects, and corresponding primary unit aspects, [and] method aspects." (*Id.*, 22:14-32.) The FIG. 23 configuration is described in the form of a "shelf" placed on table-top. (*Id.*, FIG. 23 (below), 11:45-12:19.)

Fig. 23

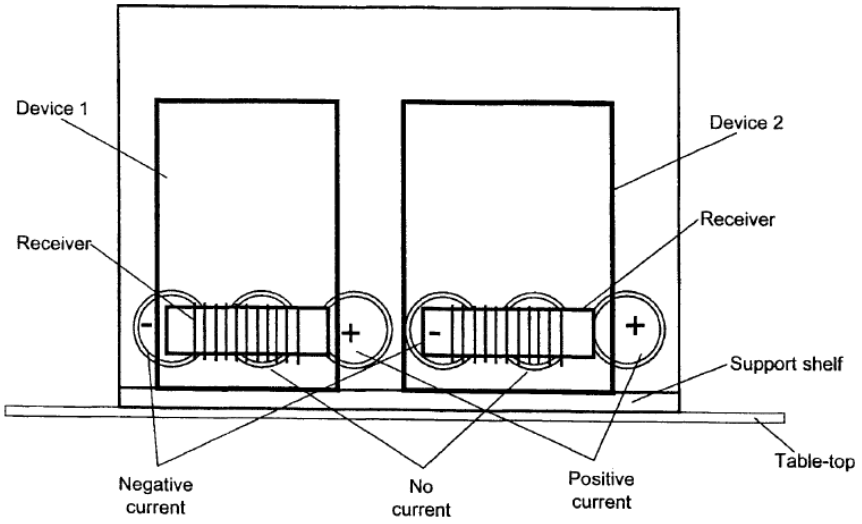

A POSITA would have understood that *Fells* contemplates charger implementations that are compatible with portable applications (e.g., a charger mat, or shelf can be moved.) (Ex.1002, ¶¶248-249.)

While *Fells* does not expressly disclose the charger being "**incorporated into a second mobile device**," it would have been obvious to implement such features in light of the teachings/suggestions in *Fells* and *Sagoo*. (Ex.1002, ¶250.)

Sagoo discloses an inductive power sharing system that addresses potential limitations with fixed chargers, such as being coupled to an AC power source. (Ex.1048, Abstract, 1:15-63, FIG. 1.) *Sagoo* teaches configurations to "maximize the portability of a mobile device" by sharing power between mobile devices, (*id.*, 1:64-2:54), including, for example, inductively transferring power to another mobile device using known primary/secondary coil features/arrangements (*id.*, 3:52-5:39).

A mobile device may operate in source mode (provides energy to another device) and a load mode (charged by energy of another device) (*id.*, 4:30-33), where an inductive coil in a mobile device "serves as the primary coil or the secondary coil according to whether the mobile device supplies energy or is supplied with energy" (*id.*, 5:23-39). *Sagoo* provides examples with respect to FIGS. 4-5, and 8:

FIG. 4

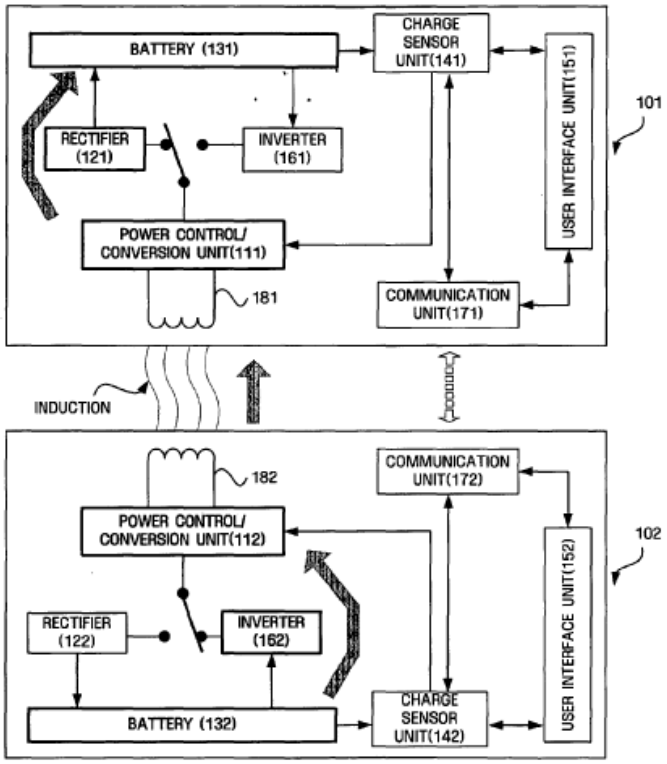

FIG. 5

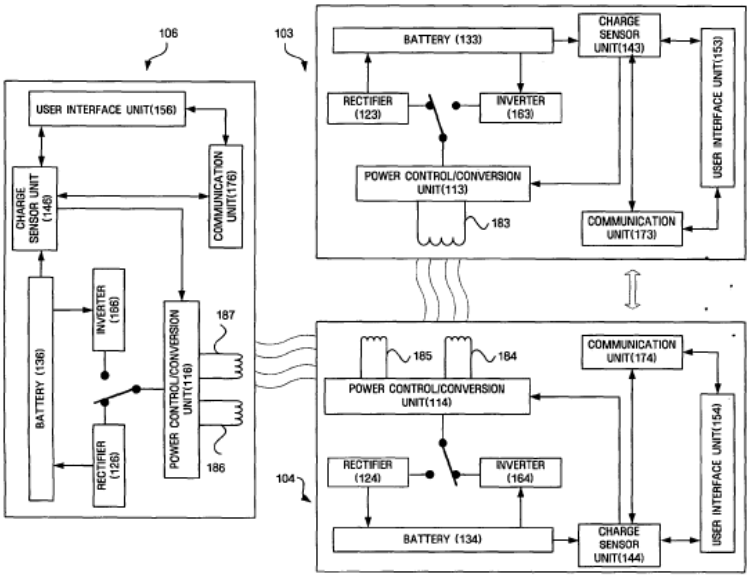

FIG. 8

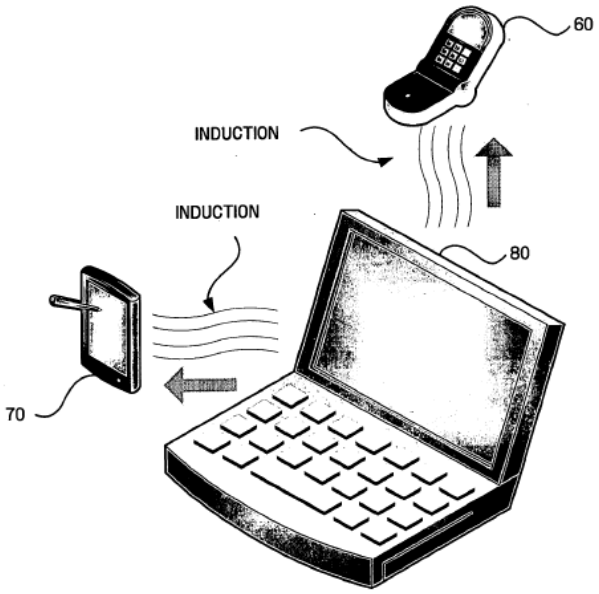

(*Id.*, 5:40-8:41, FIGS. 6-7.) (Ex.1002, ¶¶251-252; §§IX.C.1(b)-(d).) Such arrangements include rechargeable batteries within each mobile device that are used to operate that mobile device and to act as a source of power inductively transferred

to another mobile device (in source mode), thus operating as a "charger" (Ex.1048, 4:10-11, 7:9-8:3) and also a Bluetooth communication system for communicating with another mobile device (*id.*, 5:5-22, 7:4-8:4). (Ex.1002, ¶253.)

Given *Sagoo* describes an inductive power transfer system including techniques/technologies/configurations similar/related to those of *Fells* (§§IX.A.1(a)-(q)), a POSITA had reasons to consider the teachings/suggestions of *Sagoo* in context of *Fells*. (Ex.1002, ¶254.) Indeed, *Sagoo* is in the same field of endeavor as the '349 patent and *Fells*. (*Id.*; Ex.1001, 1:53-58. 3:28-6:14; *supra* and below (regarding *Sagoo*); §§IX.A.1(a)-(q) (regarding *Fells*).) Like *Fells*, *Sagoo* discloses features that were reasonably pertinent to one or more problems the inventor for the '349 patent was trying to solve. (Ex.1002, ¶254; Ex.1001, 1:53-2:38. 3:28-6:14; Ex.1048, 1:15-2:54; §§IX.A.1(a)-(q).) Such teachings would have been consulted by the inventor of the '349 patent, and a POSITA, looking to address/solve such issues and others relating to the design/implementation of an inductive power transfer system, like that described by *Fells*. (Ex.1002, ¶255.)

Upon considering *Sagoo*, a POSITA would have been motivated to configure *Fells*' system such that the "charger" is implemented in "a second mobile device," including functionalities/features similar to those of *Sagoo*, especially since a "charging pad [may be] fixed in a state of being connected to an AC power supply" thus limiting the "mobility of a mobile device requiring charging" like *Fells'* "first

mobile device" (§IX.A.1(f)). (Ex.1048, 1:53-58; Ex.1002, ¶255.) A POSITA would have appreciated the benefits/advantages such a modification would have provided to *Fells*' system (*e.g.*, portable charging "maximiz[ing] the portability of [the first] mobile device" (Ex.1048, 1:64-2:8)). (Ex.1002, ¶255.) Given *Fells* does not restrict implementations compatible with portable chargers (such as another mobile device) (*supra*), a POSITA would have had reasons, and found it obvious, to leverage the teachings/suggestions of *Sagoo* to implement the above-discussed modification to *Fells*' system. (*Id.*)

A POSITA would have had the skills, knowledge, and rationale in light of the teachings/suggestions of *Fells* and *Sagoo* to implement such a modification while taking into account design tradeoffs and techniques/technologies, with a reasonable expectation of success. (*Id.*, ¶256.) A POSITA would have appreciated the benefits of portability with respect to the charger as compared to a non-portable charger, as noted by *Sagoo* (Ex.1048, 1:21-2:8). (Ex.1002, ¶256.) Implementing the above-modification would have involved applying known technologies (*e.g.*, known use of mobile device components/inductive power transfer technologies, consistent with those taught by *Fells*/*Sagoo*), according to known methods (*e.g.,* inductive power transfer between devices using such known technologies) to yield the predictable result of providing a portable charger that is configured to charge the battery of

another mobile device, consistent with *Sagoo*'s and *Fells*' teachings. (*Id.*, ¶256.) *KSR*, 550 U.S. at 416. (*See* §§IX.C.1(b)-(d), IX.C.2, IX.C.3.)

b) the second mobile device includes an internal, rechargeable battery;

The above *Fells-Sagoo* modified system discloses/suggests this limitation. (Ex.1002, ¶¶257-258; §§IX.A.1, IX.C.1(a), IX.C.1(c)-(d).) As explained, *Sagoo* discloses when a mobile device is operating in load mode, a battery in the mobile device is rechargeable by power received from another mobile device. (§IX.C.1(a); Ex.1048, 4:30-33, 5:22-39, 6:26-55, 7:4-8:6, FIGS. 4-5 (annotated-below), 8.)

FIG. 4

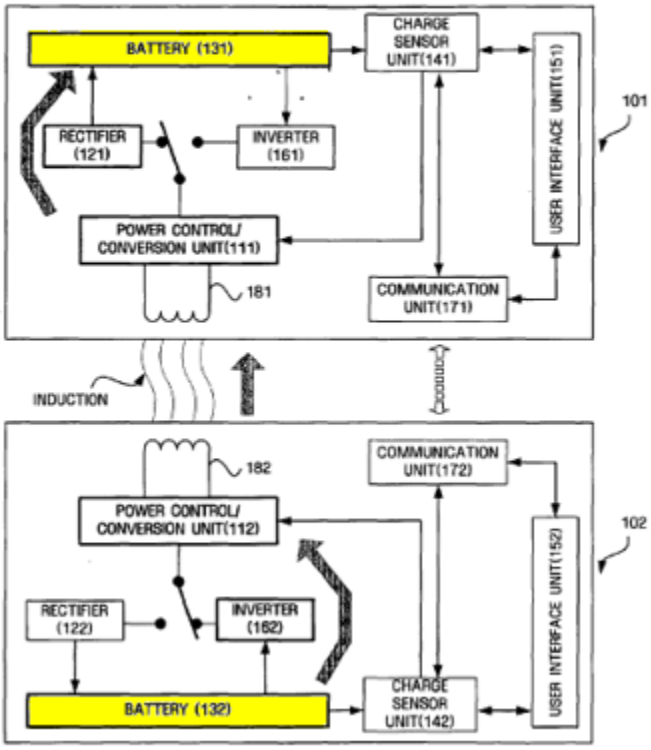

FIG. 5

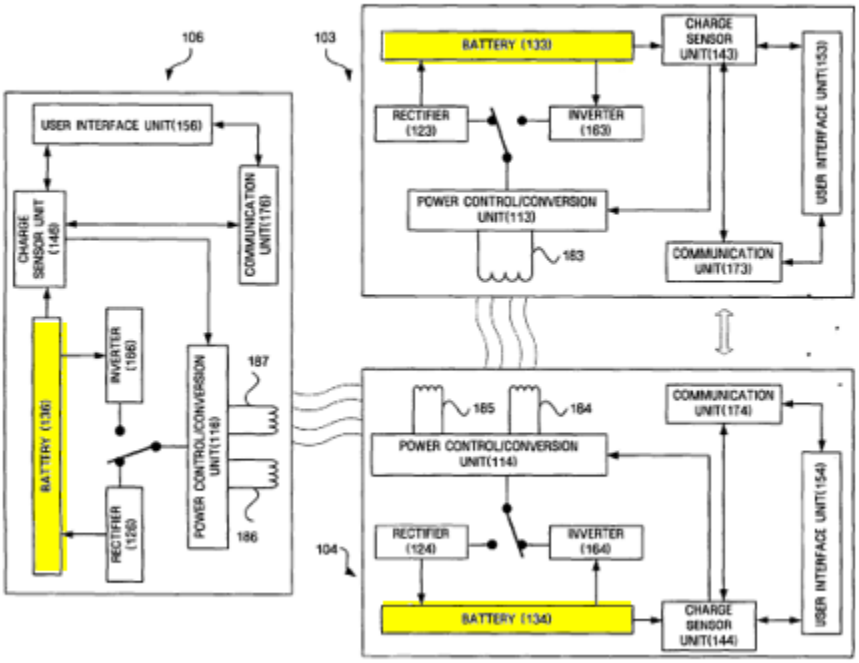

(*See also id.*, 6:4-16 ("rechargeable batteries such as battery 131 of the first device 101 can be installed in devices, such as a notebook computer").)

Accordingly, for reasons discussed above for limitation 13(a), a POSITA would have been motivated and found obvious (and had the same rationale and expectation of success) to configure the modified *Fells*' charger (configured as a second mobile device) to include a rechargeable battery (internal power source) so that that the second mobile device could operate portably similar to the features discussed by *Sagoo*. (§§IX.C.1(a), IX.C.1(c)-(d), IX.C.2-C.3; Ex.1002, ¶258.)

c) the second mobile device uses the internal battery to transfer power to and operate the charger for a period of time; and

Fells in view of *Sagoo* discloses/suggests this limitation. (Ex.1002, ¶¶259-260; §§IX.A.1, IX.C.1(a)-(b).) For reasons explained for limitations 13(a)-(b), the modified system would have included a charger-based mobile device ("**second mobile device**") that uses the "**internal**" rechargeable "**battery**" as an internal power source "**to transfer power to and operate the charger**" for a period of time (consistent with known portable device battery operations) (*e.g.*, §§IX.C.1(a)-(b); Ex.1048, 4:10-11 (battery "installed in order to operate the portable device").

The battery in the modified *Fells* charger-based "second mobile device" would thus have operated to transfer power to and operate the charger in the device so that the device can perform operations consistent with those discussed by *Fells* and above for claim 1 (§§IX.A.1(a); IX.C.1(a)-(b); Ex.1002, ¶259.) A POSITA would have understood that by having an internal rechargeable battery, the modified charger-mobile-device in the *Fells-Sagoo* combination discussed above would have been configured to allow power to be used to operate the charger within the mobile device to perform operations/features consistent with those discussed by *Fells* and above for claim 1. (§§IX.A.1(a); IX.C.1(a)-(b); Ex.1002, ¶260.) (*See* §§IX.C.1(d); IX.C.2-C.3.)

d) the first and second mobile devices comprise Bluetooth communication systems to communicate with each other during non-power transfer operations.

Fells in view of *Sagoo* discloses/suggests this limitation. (Ex.1002, ¶¶261-263; §§IX.A.1, IX.C.1(a)-(c).)

A POSITA would have been motivated, and found obvious, to configure the above modified *Fells*' system (§§IX.C.1(a)-(c)) such that both mobile devices (**first and second mobile devices**) include a Bluetooth communication system, allowing the devices to communicate using well known wireless technologies/techniques, consistent with known mobile device operations/configurations. (Ex.1002, ¶261.) Such a POSITA would have been motivated to implement such features in the modified *Fells*' system given *Fells* indicates that the charger and portable device can both comprise Bluetooth communication components (systems) that enable communications to facilitate sensing of the location/orientation of receiver coil(s) with the charger, which occur at times "**during non-power transfer operations**" (*e.g.,* before power transfer operations commence) (Ex.1005, 12:20-22, 12:34-36 (portable device "reports back the signal strength via a separate communications channel (e.g., ***Bluetooth***), which reveals its location"); Ex.1002, ¶261.) Moreover, a POSITA would have found motivation to implement such features in light of *Sagoo*'s teachings/suggestions that demonstrate known use of Bluetooth communication systems in mobile devices. (Ex.1048, FIGS. 3-5, 5:5-21

(communication unit 170 in mobile device "performs communications" and "receives information" using *e.g.,* "Bluetooth"), 5:55-65 ("[c]ommunication units 171 and 172 of the two mobile devices perform information exchange"), 6:17-25; Ex.1002, ¶262.)

In light of such teachings, coupled with a POSITA's knowledge of Bluetooth technologies/techniques to facilitate communication of information between mobile devices (Ex.1002, ¶263; Ex.1049, 1:56-60, 4:14-55, 5:45-59, 6:13-21, 14:5-14, 15:51-61), a POSITA would have found it obvious to configure the mobile devices in the above modified *Fells* system to include similar technologies/techniques. (*Id.*, ¶263.) Such modification would have been a predictable application of known technologies/techniques (as demonstrated by *Sagoo*/*Fells*) for known purposes (*e.g.*, communication between devices), that would have been within the skills, knowledge, and capabilities of a POSITA at the time. (*Id.*) As such, a POSITA would have had a reasonable expectation of success of implementing Bluetooth technology in the mobile devices, as was routinely done at the time. (*Id.*; §§IX.C.2-C.3.)

2. Claim 15

a) The system of claim 13, wherein the second mobile device further includes: an additional inductive charger, wherein the additional inductive charger includes an additional charger coil to transfer power to additional mobile devices.

Fells in view of *Sagoo* discloses/suggests this limitation. (Ex.1002, ¶¶264-270; §§IX.A.1, IX.C.1.) As explained, *Fells* discloses a charger, including a plurality of charging coils to transfer power to multiple mobile devices. (§§IX.A.1(a)-(q).) For example, in addition to the primary unit representing the "charger" recited in claim 1, one or more portions of the primary unit's charging coils and associated circuitry/components constitutes an additional "charger" (FIG. 23 being one non-limiting example). (§IX.A.1(b); Ex.1002, ¶265.)

Fig. 23

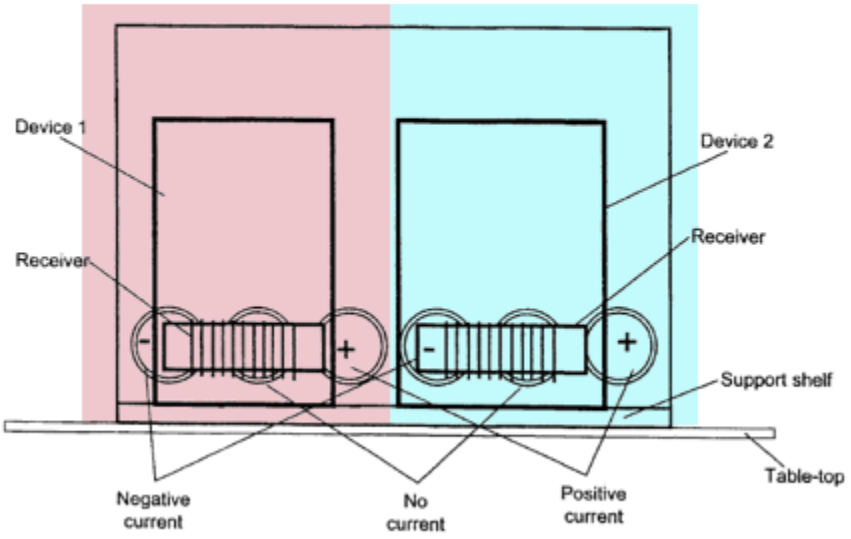

Such configurations provide for charging multiple mobile devices, demonstrate examples of a "**charger**" and an "**additional inductive charger**" with an "**additional charger coil to transfer power to additional mobile devices**" as claimed. (Ex.1002, ¶266.) For example, using the example above, either the red/blue portion (and associated circuitry/components) exemplifies a "**charger**" and the other blue/red portion exemplifies an "**additional inductive charger**." Other multiple-device charging configurations likewise provide examples of similar features (*e.g.*, Ex.1005, FIG. 8.) (Ex.1002, ¶266)

A POSITA would have had the same motivation/skills/capabilities/knowledge, and expectation of success to modify the *Fells-Sagoo* combined system discussed above for claim 13 to include an array of charging coils (and related components) in the "**second mobile device**" (§IX.C.1(a)-(d)) that form a "**charger**" and "**additional inductive charger**" like that recited in claim 15. (§IX.C.1; Ex.1002, ¶267.) The resulting combination would have predictably resulted in a "**system**" including a first mobile device and a second

mobile device including multiple "chargers" for inductively powering other mobile devices consistent with the features disclosed/suggested by *Fells* and *Sagoo*.[11] (*Id.*)

For example, in one non-limiting example, for the above-reasons, a POSITA would have been motivated, and found obvious, to configure the modification to include (which is applicable to the obviousness rationale for claim 13 (and thus incorporated above for §IX.B.1)), a "**second mobile device**" as a laptop computer, that may have a plurality of charging coils (that operate in a manner consistent with that disclosed by *Fells* as modified by the teachings/suggestions of *Sagoo*) positioned in the cover of the laptop so that multiple other mobile devices (including the "**first mobile device**" and "**additional mobile device(s)**") can be positioned on the closed cover to be inductively powered in a manner consistent with the operations/functionalities discussed above for the *Fells-Sagoo* modified system. (Ex.1002, ¶¶268-270; §§IX.A.1, IX.C.1; Ex.1048, FIG. 8 (below), FIG. 5, 6:49-7:3 (third device 104 with multiple coils that can operate in load or source mode).)

[11] The '394 patent does not disclose a system including all of the features recited in claims 1, 13, and 15, which supports obviousness. (*See generally* Ex.1001.) *Graham* at 25 (quoted *supra* §IX.A.2).

FIG. 8

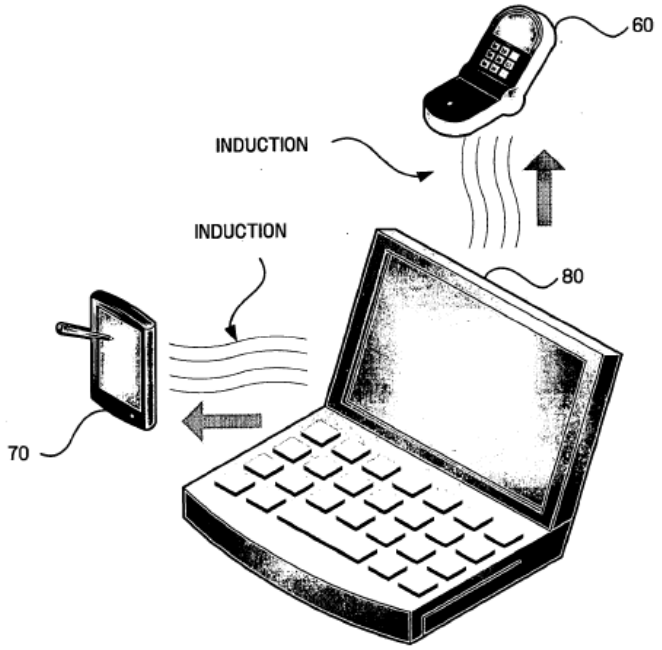

3. Claim 16

a) The system of claim 13, wherein the receiver of the first mobile device is a first receiver, and the second mobile device includes a second receiver to inductively receive power to charge the internal, rechargeable battery of the second mobile device.

Fells in view of *Sagoo* discloses/suggests this limitation. (Ex.1002, ¶¶271-273; §§IX.A.1, IX.C.1-C.2.) As explained, *Fells* discloses the claimed "receiver" (§IX.A.1(f)-1(j)), which is a "**first receiver**." (Ex.1002, ¶272.) The analysis above for claim 13 also demonstrates how the *Fells-Sagoo* combination discloses and/or suggest the "**second mobile device**," (§IX.C.1), and why it would have been obvious to configure the modified system such that the "rechargeable battery" in the second device can operate as an internal power source for the second mobile device, and

also can be configured to receive power for charging the battery. (§§IX.A.1(b)-(c); Ex.1048, FIGS. 3-5 (below), 4:30-7:3 (mechanisms to switch between rectifier/inverter operations to respectively charge the battery (load mode) or provide power to charge other mobile device(s) (source mode).)

FIG. 3

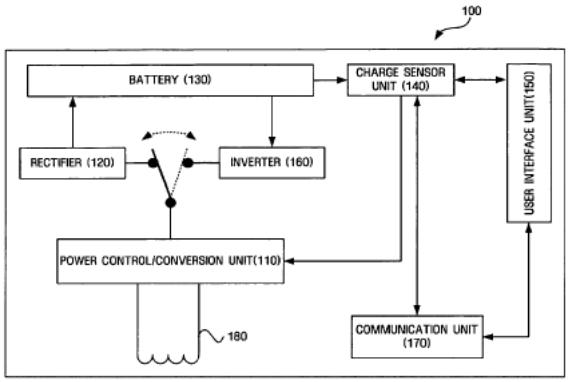

FIG. 4

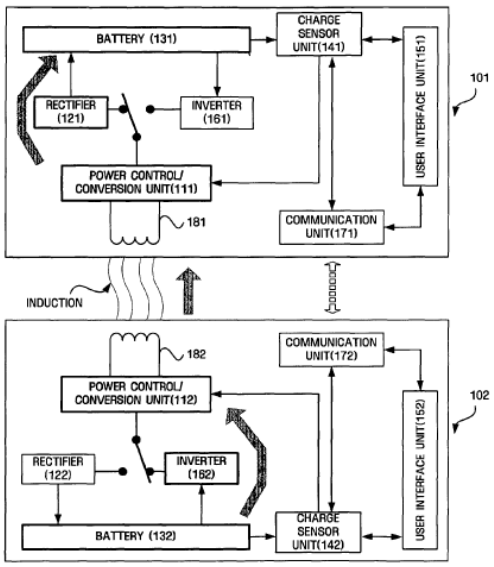

FIG. 5

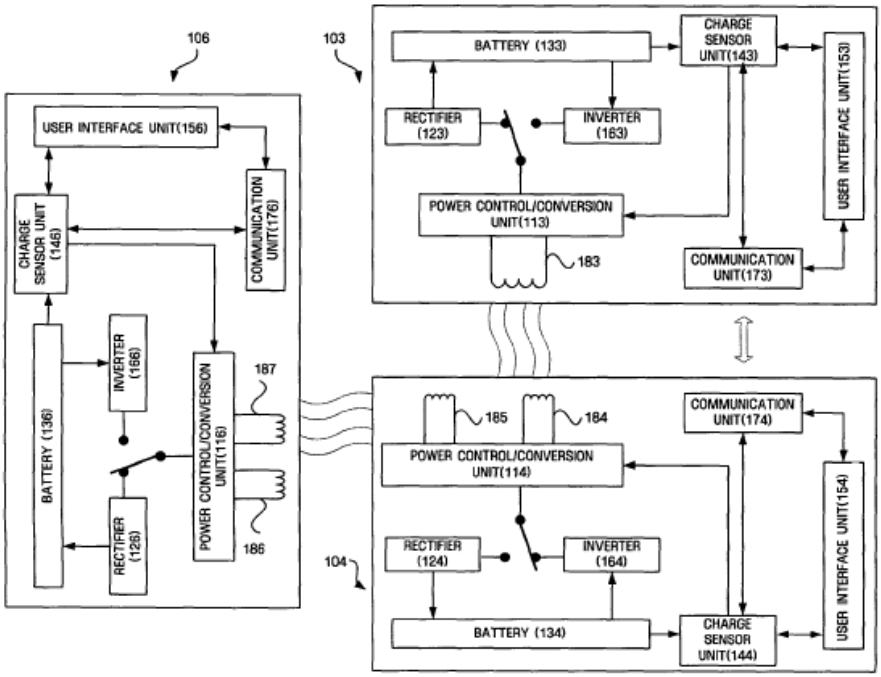

For reasons similar to that discussed for claim 13, a POSITA would have been motivated, and found obvious, to configure the "second mobile device" in the *Fells-Sagoo* combination to include a component/components that operate as a receiver (*e.g.*, "**a second receiver**") that "**inductively receive[s] power to charge the internal, rechargeable battery of the second mobile device**." (Ex.1002, ¶273; §IX.C.1(a)-(c).) A POSITA would have been motivated to configure modified *Fells-Sagoo* system to allow the "second mobile device" to include a "receiver" to facilitate wireless/inductive recharging of its internal battery (§§IX.C.1; Ex.1002, ¶273.) Such a modification would have benefited the *Fells-Sagoo* system by providing charging options for the "**second mobile device**" without requiring a wired external power source, similar to the benefits suggested by *Sagoo*. (Ex. 1002,

¶273.) A POSITA would have had the same motivation/skills/rationale/knowledge, and expectation of success in implementing such features as explained above for modifying *Fells* in light of *Sagoo* for claim 13.[12] (*Id*.)

D. Ground 4: Claim 17 is obvious over *Fells* in view of *Walley*

1. Claim 17

a) The system of claim 1, wherein: the receiver and the charger include communication and control electronics circuits to communicate, between the receiver and the charger, information associated with the transfer of power to the first mobile device; and

b) the communication is through a charger antenna that includes the charger coil and a receiver antenna that includes the solenoid.

Fells in view of *Walley* discloses/suggests these limitations. (Ex.1002, ¶¶274-281; §IX.A.1 (claim 1).) As explained, *Fells* discloses and/or suggests the limitations of claim 17. (§IX.A.2.) A POSITA would have been further motivated

[12] The '394 patent does not disclose a system including all of the features recited in claims 1, 13, and 16, which supports obviousness. (*See generally* Ex.1001.) *Graham* at 25 (quoted *supra* §IX.A.2). Such lack of disclosure further supports obviousness where the "second receiver" is associated with or part of the charging coil(s) in the "second mobile device" of the modified *Fells-Sagoo* system, which is one of the exemplary ways the *Fells-Sagoo* combination meets claim 16.

to configure *Fells*' system to operate the charger and mobile device coils as antennas with associated communication/control electronic circuits to communicate information between the device's receiver and the charger to facilitate the inductive power transfer operations taught by *Fells* in view of the teachings/suggestions of *Walley*. (Ex.1002, ¶275.)

Walley describes inductive power transfer system configurations that include components and perform charging operations similar to that of *Fells*, and thus is in the same field of endeavor as *Fells* and the '349 patent. Also like *Fells*, *Walley* discloses features that were reasonably pertinent to one or more problems the inventor for the '349 patent was trying to solve. (*Id,* ¶276; Ex.1001, 1:53-2:38. 3:28-6:14; Ex.1049, Abstract, 1:23-2:4; Ex.1005, 1:3-6:3; §§IX.A.1.) Thus, a POSITA would have consulted teachings/suggestions like those in *Walley* when designing/configuring/implementing an inductive power transfer system consistent with that described by *Fells*. (Ex.1002, ¶276.)

Walley discloses wireless power transfer system technologies/techniques like *Fells.* (Ex.1049, 3:35-7:13.) *Walley* describes a transmitter unit that communicates with mobile devices "via the control channel to facilitate efficient wireless power transfer from the WP TX unit 10 to the power RX circuit 22, 28 of the devices 12-14." (*Id*., 5:60-63.) The "communication" is associated with the transfer of power and allows tuning components to provide desired performance levels of energy

transfer and in some configurations uses the coil for both power and information communications (acting as an antenna). (*Id.*, FIGS. 5, 8, 18 (below), 5:63-6:6, 8:8-22, 9:18-58, 11:1-56, 12:27-35, 16:42-18:23.)

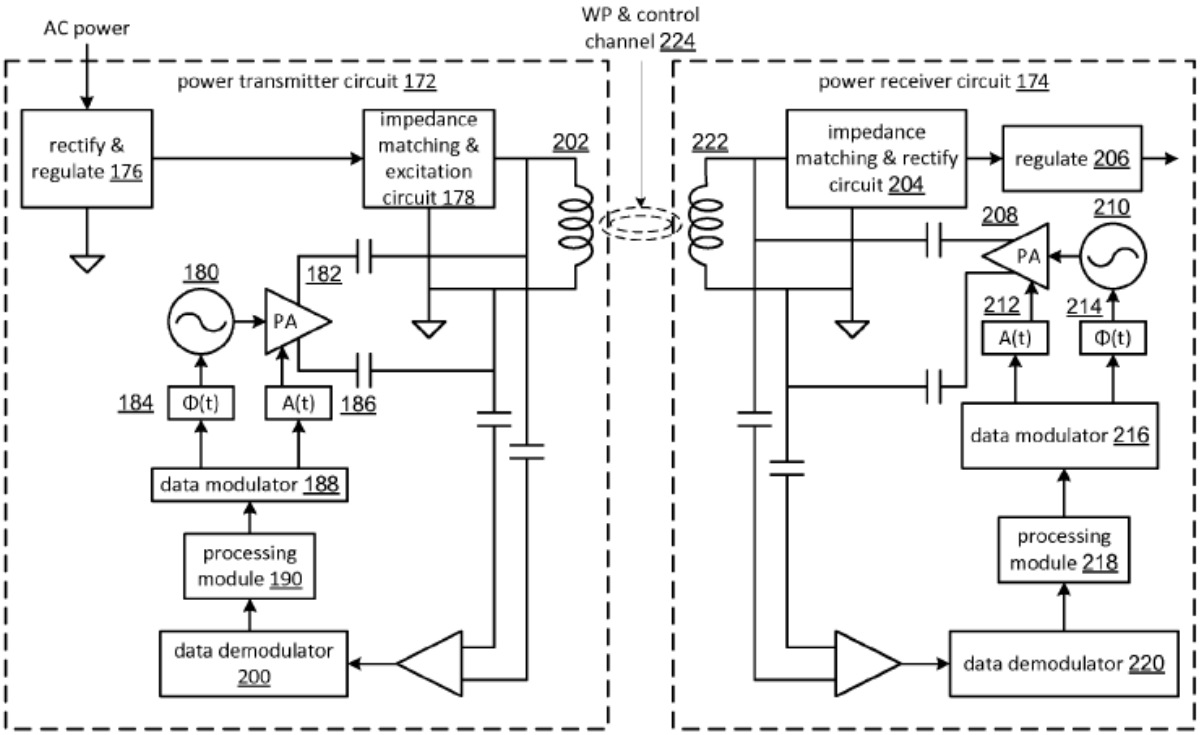

FIG. 8

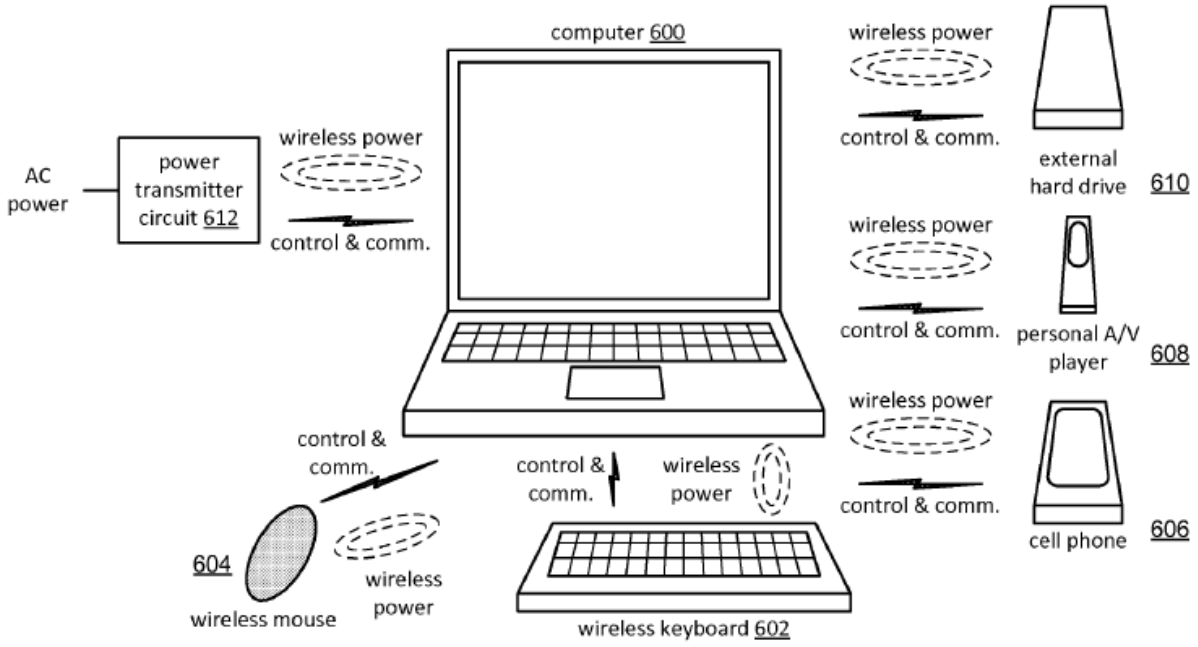

FIG. 18

Thus, *Walley* discloses charger and receiver units including communication and control circuitry that communicates information associated with the transfer of power to a mobile device, via respective shared coils acting as power transfer coils and antennae for information transfer. (*Id.*; Ex.1002, ¶¶277-279.)

In light of such teachings, a POSITA would have been motivated, and found obvious, to configure *Fells*' system with similar features, especially since *Fells* contemplates configurations that communicate information concerning the transfer of power. (Ex.1005, 12:21-23, 12:41-43, 10:55-59 ("[i]t may be necessary for the portable device to communicate what type of receiver it is to the charger, so that the

charger can correctly determine which coils should be activated and with what polarity configuration").) Such suggestions coupled with *Walley*'s teachings (and a POSITA's knowledge/skills) would have motivated a POSITA to implement communication and control electronic circuits in *Fells*' charger and mobile device receiver, and done so with a reasonable expectation of success that the modified system would operate as intended/consistent with the features discussed by *Fells* and *Walley* to provide efficient and effective wireless transfer of power. (Ex.1002, ¶279.) (*See* rationale in §IX.A.2.)

Additionally, to the extent *Fells* does not disclose the resonant capacitors/tuned circuit features of claim 1 (*e.g.*,, limitations 1(e), 1(j), 1(l)) (incorporated in dependent claim 17), a POSITA would have found it obvious in view of *Walley* to configure *Fells*' system to use impedance matching circuitry with a resonant capacitor in the charger driver circuit and the receiver circuit to provide a tuned circuit to facilitate an efficient transfer of power and information between the charger and mobile device. (Ex.1002, ¶280.) A POSITA would have been motivated given *Walley*'s teachings of impendence matching that "allows the LC circuit of the capacitor and coil to be tuned to a desired resonant frequency and to have a desired quality factor" for the transmitter and receiver coils, to provide desired efficient energy transfer. (Ex.1049, FIGS. 5, 7-8, 18, 5:63-6:6, 8:8-21, 9:38-58, 10:38-53, 11:13-32, 12:27-35, 17:35-42, 23:47-54.) For reasons similar to those

above, a POSITA would have appreciated the benefits of implementing impedance matching/tuning features similar to those disclosed by *Walley* to "facilitate efficient wireless power transfer." (Ex.1049, 5:60-6:6; Ex.1002, ¶281.) Such suggestions coupled with *Fells*' teachings (and a POSITA's knowledge/skills) would have motivated a POSITA to configure/implement resonant capacitors and impedance matching features in the circuits of the charger and receiver of *Fells*' system (as discussed for claim 1), with a reasonable expectation of success that the modified system would operate as intended/consistent with the features discussed by *Fells*/*Walley*. (Ex.1002, ¶281.)

E. Ground 5: Claim 18 is obvious over *Fells* in view of *Ben-Shalom*

1. Claim 18

a) The system of claim 1, wherein the charger is incorporated into an enclosed volume for placement of the receiver in the power transfer position to receive inductive power.

Fells in view of *Ben-Shalom* discloses/suggests this limitation. (Ex.1002, ¶¶282-289; §IX.A.1.)

While *Fells* does not expressly describe the charger incorporated into an enclosed volume for placement of the receiver in the power transfer position to receive inductive power (§IX.A.1(k)), it would have been obvious to configure *Fells*' charger with such features in light of *Ben-Shalom*. (Ex.1002, ¶¶283-284.)

Ben-Shalom describes inductive power transfer systems, including configurations/components/charging operations similar to *Fells*, and thus is in the same field of endeavor as *Fells* and the '349 patent. Like *Fells*, *Ben-Shalom* discloses features that were reasonably pertinent to one or more problems the inventor for the '349 patent was trying to solve. (Ex.1002, ¶285; Ex.1001, 1:53-2:38. 3:28-6:14; Ex.1050, Abstract, 1:5-5:5; Ex.1005, 1:3-6:3; §§IX.A.1(a)-(q).) Thus, a POSITA would have consulted teachings/suggestions like those in *Ben-Shalom* when designing/configuring/implementing an inductive power transfer system consistent with that described by *Fells*. (Ex.1002, ¶285.)

Ben-Shalom discloses wireless power transfer system technologies/techniques similar to *Fells*. (Ex.1050, FIG. 1 (below), 6:16-7:15, 8:1-11:12, 11:14-14:6 (selected coil activation), 14:9-30 (data communications), 14:31-17:6 (receiver, and resonance circuits), 17:7-22:13.)

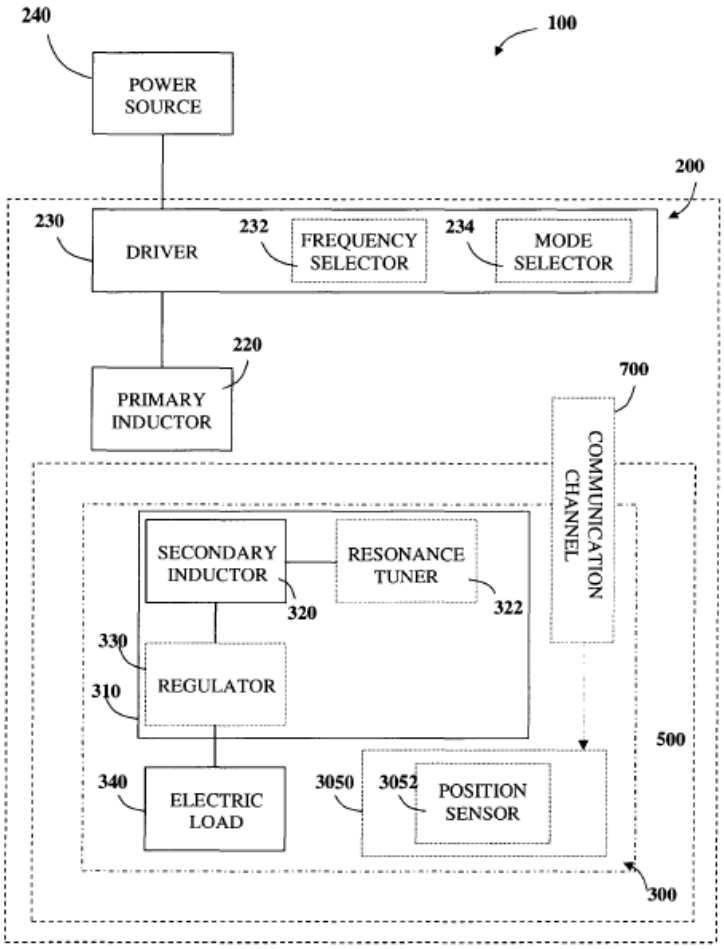

Fig. 1

Ben-Shalom explains the power transmitter can be in the shape of a container having a volume for receiving the power receiver in a position for receiving power inductively ("**enclosed volume for placement of the receiver in the power transfer position to receive inductive power**"). (Ex.1050, FIGS. 2-5, (below), 7:17-24 ("inductive power transmitter 200, or a portion thereof, may be in the shape of a ***container***" having "***any shape that creates a three dimensional space therewithin***" with "an interior space that may serve as a power transmission space

in which to place one or more inductive power receivers"), 7:25-37 (transmitter may be stand-alone or inserted or integrated into another item, e.g., drawer, table, car), 8:15-11:12; Ex.1002, ¶287.)

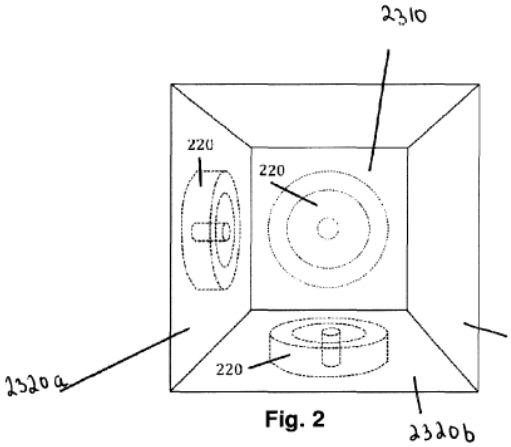

Fig. 2

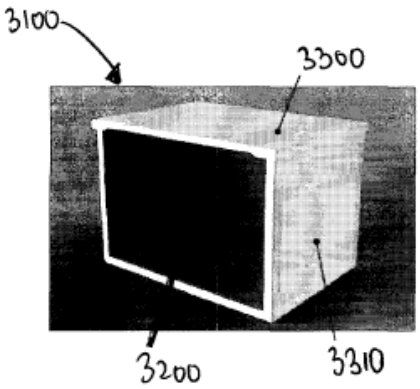

Fig. 3

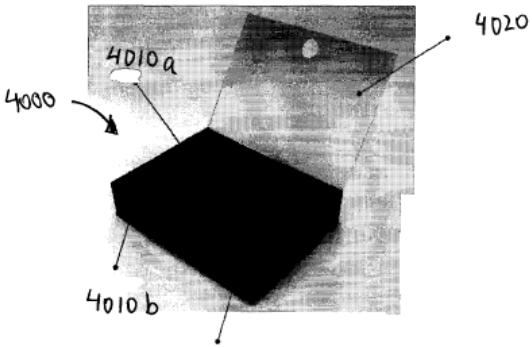

Fig. 4

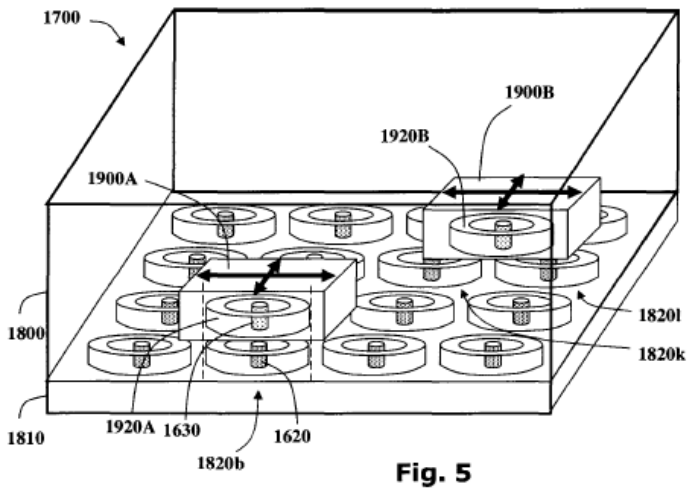

Given *Ben-Shalom*, and a POSITA's knowledge, a POSITA would have found it obvious to configure the charger in *Fells*' system with a housing having a container with an enclosed volume that allows placement of the mobile device's receiver so that the power transfer position (§IX.A.1(k)) is achieved for inductive power transfer. (Ex.1002, ¶288.) A POSITA would have appreciated the benefits of providing an enclosed volume to help guide such placement of the receiver to maximize the inductive transfer of power to the mobile device, as suggested by *Ben-Shalom*. (*Id.*) Indeed, like *Fells*, *Ben-Shalom* discloses configurations where an array of coils in a surface may be used to charge "multiple inductive power receivers" that are placed in "disparate locations...of the inductive power transmitter." (Ex.1050, FIG. 5, 10:1-5; *id.*, 8:37-11:12.) A POSITA would have had reason, skills, and capabilities to design/implement such a modification, especially where *Fells* contemplates versatility in the design/configurations of the charger

(§§IX.A.1(a), IX.A.1(k); Ex.1005, FIGS. 1-8, 15-18, 22-23) and *Ben-Shalom* offers guidance on a wide range of possible containers for incorporating such a charger (Ex.1050, 7:18-37; Ex.1002, ¶289.) Such a modification would have been a predictable application of known technologies/techniques (as demonstrated by *Ben-Shalom*/*Fells*) for known purposes (*e.g.*, providing a charger in a volume for receiver placement). (Ex. 1002, ¶289.) As such, a POSITA would have had a reasonable expectation of success of implementing such a modification.[13] (*Id.*)

F. Ground 6: Claim 17 is obvious over *Fells* in view of *Stoner* and *Nakamura*

Fells in view of *Stoner* and *Nakamura* discloses/suggests claim 17 (and claim 1 incorporated therein). (Ex.1002, ¶¶290-295.)

As explained, *Fells* discloses/suggests claim 17 (§IX.A.1-2). §IX.A.1(k) demonstrates how *Fells* discloses the claimed "**means for positioning**" and alternatively how/why it would have been obvious to include such features. (§IX.A.1(k).) That analysis references the teachings/suggestions of *Stoner*

[13] The '349 patent only mentions once that the charger can include "an open or enclosed volume or part" (Ex.1001, 4:20-23), but does not describe a volume for placing a receiver in the power transfer position. Such lack of disclosure supports obviousness. *Graham* at 25.

(Ex.1011) and *Nakamura* (Ex.1010) supporting a POSITA's state-of-art knowledge at the time. (*Id.*) Here, Petitioner proposes that a POSITA would have been motivated to consider and implement teachings/suggestions from *Stoner-Nakamura* to modify *Fells* to include a mechanism for assisting a user to align/position the receiver ("**means for positioning**"). (§IX.A.1(k) (including citations of *Stoner/Nakamura*); Ex.1002, ¶¶291-292.) A POSITA would have had the same motivation/rationale/skills/knowledge, and expectation of success as explained in §IX.A.1(k) to modify *Fells* to include a mechanism similar to those taught by *Stoner* and *Nakamura* (e.g., magnetic/visual-based means for positioning (Ex.1010, FIGS. 8-9, ¶¶0102-0103; Ex.1011, Abstract, FIGS. 1-4, 8, 11, 1:6-46, 2:14-4:62, 5:38-7:34, 10:46-12:35).) A POSITA had reasons to consider *Stoner* and *Nakamura* given they are in the same field of endeavor as *Fells* and the '349 patent and address similar problems as those addressed in the '349 patent and *Fells.* (§§IX.A.1-IX.B.1 (regarding *Fells*); Ex.1010, Abstract, ¶¶0002-0022, 0062-0124; Ex.1011, Abstract, 1:5-4:62, 5:38-8:3, 8:26-9:42.) Thus, to the extent *Fells* does not disclose/suggest the "**means for positioning**" (§IX.A.1(k)), a POSITA would have found it obvious to include such means in light of *Stoner-Nakamura*, for similar reasons explained above. (§IX.A.1(k); Ex.1002, ¶¶293-294.) *KSR* 550 at 416.

Additionally, to the extent *Fells* does not disclose the resonant capacitors and tuned circuit features of claim 1 (*e.g.*, limitations 1(e), 1(j), 1(l)) (incorporated in

claim 17), a POSITA would have found it obvious in view of *Stoner* to configure *Fells*' system to use resonant technologies (including resonant capacitor(s)) in the charger driver and receiver circuits to provide a tuned circuit to facilitate an efficient transfer of power/information between the charger and device. (Ex.1002, ¶295.) A POSITA would have been motivated given *Stoner*'s teachings of known use of resonant circuitry (capacitors 110, 134) to provide a tuned circuit to facilitate power/data transfer between coils. (Ex.1011, FIG. 1, 7:3-8:3.) A POSITA would have appreciated the benefits of implementing such resonant-based features similar to those disclosed by *Stoner* to facilitate efficient wireless power transfer in *Fells*' modified system. (Ex.1002, ¶295.) Thus, a POSITA would have been motivated configure/implement resonant capacitors as explained above to allow the charger to transfer power via a resonant frequency to the mobile device, and done so with a reasonable expectation of success. (*Id.*)

G. Ground 7: Claim 8 is obvious over *Fells* in view of *Stoner, Nakamura, Silva* and *Jung*

The *Fells-Stoner-Nakamura* combination in view of *Silva* and *Jung* discloses/suggests claim 8. (Ex.1002, ¶¶296-299.) Ground 6 (and incorporated Ground 1) demonstrate how *Fells* as modified discloses/suggests the limitations of claim 1. (§§IX.A.1, IX.F; Ex.1002, ¶297.) Ground 2 explains how the *Fells-Silva-Jung* combination discloses/suggests the limitations of claim 8. (§IX.B; Ex.1002, ¶297.)

For the same reasons explained in Grounds 1-2 and 6, a POSITA would have been further motivated, and found obvious, to configure and modify the above-discussed *Fells-Stoner-Nakamura* system (§IX.F) to use Litz wire selected for operation at a frequency of greater than 205 kHz (claim 8) for similar reasons discussed in light of *Silva-Jung* (and state of art knowledge) as explained in Ground 2 (§IX.B). (Ex.1002, ¶298.) Further, in view of *Stoner*, a POSITA would have been motivated to configure the *Fells* modified system to use resonant capacitors (for providing a "tuned circuit") as recited in claim 1 for the same reasons explained in Ground 6. (§IX.F; Ex.1002, ¶298). A POSITA would have had the same motivation/rationale/skills/knowledge, and reasonable expectation of success to consider and configure the *Fells-Stoner-Nakamura* system (as explained for Ground 6) based on the additional teachings/suggestions in *Silva-Jung* (as explained for Ground 2) to implement features like those recited in claim 8 (and limitations 1(e), 1(j), 1(l) (incorporated in claim 8)) as explained above in §§IX.A.1, IX.B and IX.F). (Ex.1002, ¶299.)

H. Ground 8: Claims 13 and 15-16 are obvious over *Fells* in view of *Stoner, Nakamura,* and *Sagoo*

The *Fells-Stoner-Nakamura* combination in view of *Sagoo* discloses/suggests the limitations of claims 13, 15, and 16. (Ex.1002, ¶¶300-303.) Ground 6 (and incorporated Ground 1) demonstrate how *Fells* as modified discloses/suggests claim

1. (§§IX.A.1, IX.F; Ex.1002, ¶301.) Ground 3 explains how the *Fells-Sagoo* combination discloses/suggests claims 13, 15-16. (§IX.C; Ex.1002, ¶301.)

For the same reasons/rationale/teachings/suggestions explained in Grounds 1, 3, and 6, a POSITA would have been further motivated, and found obvious, to configure and modify the above-discussed *Fells-Stoner-Nakamura* system (§IX.F) to implement features like that recited in claims 13, 15-16 for similar reasons discussed in light of the teachings/suggestions of *Sagoo* as explained in Ground 3 (§IX.C). (Ex.1002, ¶301.) Further, in view of *Stoner*, a POSITA would have been motivated to configure the *Fells* modified system to use resonant capacitors (for providing a "tuned circuit") as recited in claim 1 for the same reasons explained in Ground 6. (§IX.F; Ex.1002, ¶302). A POSITA would have had the same motivation/rationale/skills/knowledge, and reasonable expectation of success to consider/configure the *Fells-Stoner-Nakamura* system (as explained for Ground 6) based on the additional teachings/suggestions in *Sagoo* (Ground 3) to implement features like those recited in claims 13, 15, and 16 (and limitations 1(e), 1(j), 1(l)) as explained above in §§IX.A, IX.C and IX.F). (Ex.1002, ¶303.)

I. Ground 9: Claim 17 is obvious over *Fells* in view of *Stoner, Nakamura,* and *Walley*

The *Fells-Stoner-Nakamura* combination in view of *Walley* discloses/suggests claim 17. (Ex.1002, ¶¶304-307.) Ground 6 (and incorporated Ground 1) demonstrate how *Fells* as modified discloses/suggests claims 1 and 17.

(§§IX.A.1, IX.F; Ex.1002, ¶305.) Ground 4 explains how the *Fells-Walley* combination discloses/suggests claim 17 (and claim 1). (§IX.D; Ex.1002, ¶305.)

Accordingly, for the same reasons/rationale/teachings/suggestions explained in Grounds 1, 4, and 6, a POSITA would have been further motivated, and found obvious, to configure and modify the above-discussed *Fells-Stoner-Nakamura* system (§IX.F) to implement features as recited in claim 17 (and limitations 1(e), 1(j), 1(l)) for reasons discussed in light of the teachings/suggestions of *Walley* explained in Ground 4 (§IX.D). (Ex.1002, ¶306.) A POSITA would have had the same motivation/rationale/skills/knowledge, and reasonable expectation of success to consider and configure the *Fells-Stoner-Nakamura* system (Ground 6) based on the additional teachings/suggestions in *Walley* to implement features like those recited in claim 17 as explained above in §§IX.A, IX.D, and IX.F. (Ex.1002, ¶307.)

J. Ground 10: Claim 18 is obvious over *Fells* in view of *Stoner, Nakamura,* and *Ben-Shalom*

The *Fells-Stoner-Nakamura* combination in view of *Ben-Shalom* discloses/suggests claim 18. (Ex.1002, ¶¶308-311.) Ground 6 (and incorporated Ground 1) demonstrate how *Fells* as modified discloses/suggests claim 1. (§§IX.A.1, IX.F; Ex.1002, ¶309.) Ground 5 explains how the *Fells-Ben-Shalom* combination discloses/suggests the limitations of claim 18. (§IX.D; Ex.1002, ¶309.)

For the same reasons/rationale/teachings/suggestions explained in Grounds 1 and 5-6, a POSITA would have been further motivated, and found obvious, to

configure and modify the above-discussed *Fells-Stoner-Nakamura* system (§IX.F) to use the features recited in claim 18 for similar reasons discussed in light of the teachings/suggestions of *Ben-Shalom* as explained in Ground 5 (§IX.E). (Ex.1002, ¶310.) Further, in view of *Stoner*, a POSITA would have been motivated to configure the *Fells* modified system to use resonant capacitors (for providing a "tuned circuit") as recited in claim 1 for the same reasons explained in Ground 6. (§IX.F; Ex.1002, ¶310). A POSITA would have had the same motivation/rationale/skills/knowledge, and reasonable expectation of success to consider and configure the *Fells-Stoner-Nakamura* system (Ground 6) based on the additional teachings/suggestions in *Ben-Shalom* to implement features like those recited in claims 1 and 18 as explained in §§IX.A, IX.E and IX.F. (Ex.1002, ¶311.)

X. DISCRETIONARY DENIAL IS NOT APPROPRIATE

Discretionary denial under §325(d) is not appropriate here given the prior art combinations and arguments raised during prosecution are not the same or substantially similar to the grounds presented herein. The Office did not consider the disclosures of *Fells* alone or in light of the other prior art asserted herein. (Ex.1004; Ex.1001, Cover.) Indeed, the examiner allowed the '349 patent to issue without any substantive prior art analysis. (Ex.1004, 113-116.) The Office/examiner thus erred in a manner pertinent to the patentability of the challenged claims by summarily allowing the now challenged claims without considering/applying the teachings/suggestions in at least *Fells*, or in view of the other asserted prior art. *Fells* discloses/suggests many claimed features, and thus is relevant to the patentability of the challenged claim(s). (§IX.) This is true even though another publication authored by Fells was submitted during prosecution. (Ex.1001, Cover, (p.4); Ex.1020 (*Fells-II*).) While *Fells-II* provides teachings consistent a POSITA's state-of-art knowledge, *Fells* includes different/additional disclosures material to the patentability of the challenged claims, including, *e.g.*, those relating to various charger/charger coil/secondary coil/mobile device configurations. (*Compare* Ex.1005 *with* Ex.1020; §IX.) Even if the two references may overlap in some aspects, the examiner erred by not substantively

considering/applying any of such disclosures/teachings of *Fells-II*. (Ex.1004.) Accordingly, there is no basis to deny institution under §325(d).

Nakamura and the published application corresponding to *Sagoo* ("*Sagoo-2007/0103110*") were cited during prosecution. (Ex.1004, 5, 34.) The examiner similarly erred in a manner pertinent to the patentability of the challenged claims by failing to consider and apply their teachings alone or in combination with other prior art. As demonstrated in §IX.C, *Sagoo* discloses/suggests at least features pertinent to the patentability of claims 13, 15-16, and as demonstrated in §§IX.F-IX.I, *Nakamura* at least discloses features relating to the "means for positioning." Thus, both references should have been considered in combination with other pertinent references (like *Fells*). The examiner erred in believing at the time that no prior art teaches/suggests the claims without considering the collective teachings/suggestions in art like that discussed in §IX. Absent that error, the challenged claims would have likely not have issued.[14]

Further, the *Fintiv* factors do not justify denying institution. *Apple Inc. v. Fintiv, Inc.*, IPR2020-00019, Paper 11 (P.T.A.B. Mar. 20, 2020) (precedential).

[14] Petitioner reserves the right to seek leave to respond to any §325(d) (and §314) arguments that PO may raise in this proceeding to avoid institution.

The **first factor** (stay) is neutral, because Samsung has not yet moved for a stay. *See Hulu LLC v. SITO Mobile R&D IP, LLC et al.*, IPR2021-00298, Paper 11 at 10-11 (P.T.A.B. May 19, 2021).

The **second factor** (proximity) is neutral. "The PTAB will weigh this factor against exercising discretion to deny institution under *Fintiv* if the median time-to-trial is around the same time or after the projected statutory deadline for the PTAB's final written decision" (FWD). (Ex.1022, 9.) The median time from filing to trial in the Eastern District of Texas is 19 months, meaning trial will be *no earlier* than May 2024 (Ex.1023, 35), is close to the court's scheduled jury selection for August 5, 2024 (Ex.1024, 1.) With this petition filed in June 2023, a FWD may be expected by December 2024, not long after the trial date.

That the FWD may come after the trial date is not dispositive. The Board has granted institution in cases where the FWD issued months after the scheduled trial date. The Board has relied on various justifications, such as diligence in filing the petition, a stipulation not to pursue the asserted grounds in litigation, minimal investment in litigation, and the merits of the invalidity challenge were strong. *Verizon Business Network Services, Inc. v. Huawei Techs. Co.*, IPR2020-01141, Paper 12 (Jan. 14, 2021). The same factors are present in this case. For instance, Petitioner diligently filed this petition (challenging long, convoluted claims) in advance of the one-year bar date and within four months of PO's infringement

contentions in the Texas Litigation. (Exs. 1021, 1025.) Fact discovery does not close until March 18, 2024. (Ex.1024, 3.) Expert discovery has not started. (*Id.*) And the *Markman* hearing is scheduled for February 6, 2024, after the filing of this petition. (*Id.*)

The **third factor** (investment) also weighs against denial. The district court case is in the early stages. Fact discovery is in its infancy and the parties have not engaged in expert discovery. (Ex.1024, 3.) The parties have not yet identified terms for construction. (*Id.*, 4-6.) Nor have there been any substantive orders in this case.

The **fourth factor** (overlap) also weighs against denial. Petitioner hereby stipulates that, if the IPR is instituted, Petitioner will not pursue the IPR grounds in the district court litigation. Thus, "[i]nstituting trial here serves overall system efficiency and integrity goals by not duplicating efforts and by resolving materially different patentability issues." *Apple, Inc. v. SEVEN Networks, LLC*, IPR2020-00156, Paper 10 at 19 (P.T.A.B. June 15, 2020); *see Sand Revolution II, LLC v. Continental Intermodal Group-Trucking LLC*, IPR2019-01393, Paper 24 at 12 (P.T.A.B. June 16, 2020).

While the **fifth factor** (parties) may weigh slightly in favor of denial, because the Petitioner and PO are the same parties as in district court, based on a "holistic view," the factors favor institution. *Samsung Elecs. Co. Ltd. v. Dynamics Inc.*, IPR2020-00505, Paper 11 at 15 (P.T.A.B. Aug. 12, 2020).

Even if the Board determines that the above factors favor denial, the Board should not discretionarily deny institution, because this petition presents compelling merits. *See Commscope Tech. LLC v. Dali Wireless, Inc.*, IPR2022-01242, Paper 23 at 4-5 (P.T.A.B. Feb. 27, 2023) (precedential). As discussed above (§§VII, IX), the claimed features were known in the art, and in fact, are largely concepts/features used in inductive power systems (like *Fells*). (§IX) Moreover, this Petition is the ***sole*** challenge to the identified challenged claims before the Board—a "crucial fact" favoring institution. *Google LLC v. Uniloc 2017 LLC*, IPR2020-00115, Paper 10 at 6 (May 12, 2020).

XI. CONCLUSION

Accordingly, Petitioner requests institution of IPR for the challenged claims.

Respectfully submitted,

Dated: June 27, 2023

By: / Joseph E. Palys/
Joseph E. Palys (Reg. No. 46,508)
Counsel for Petitioner

CERTIFICATE OF COMPLIANCE

Pursuant to 37 C.F.R. § 42.24(d), the undersigned certifies that the foregoing Petition for *Inter Partes* Review of U.S. Patent No. 11,292,349 contains, as measured by the word-processing system used to prepare this paper, 13,980 words. This word count does not include the items excluded by 37 C.F.R. § 42.24 as not counting towards the word limit.

Respectfully submitted,

Dated: June 27, 2023

By: / Joseph E. Palys/
Joseph E. Palys (Reg. No. 46,508)
Counsel for Petitioner

CERTIFICATE OF SERVICE

I hereby certify that on June 27, 2023, I caused a true and correct copy of the foregoing Petition for *Inter Partes* Review of U.S. Patent No. 11,292,349 and supporting exhibits to be served via express mail on the Patent Owner at the following correspondence address of record as listed on PAIR:

4101 LAKE BOONE TRAIL
SUITE 218
RALEIGH, NC 27607
UNITED STATES

By: /Joseph E. Palys/
Joseph E. Palys (Reg. No. 46,508)