US 20050270745A1

(19) United States

(12) Patent Application Publication

(10) Pub. No.: US 2005/0270745 A1

(43) Pub. Date: Dec. 8, 2005

Chen et al.

(54) INTEGRATION OF PLANAR TRANSFORMER AND/OR PLANAR INDUCTOR WITH POWER SWITCHES IN POWER CONVERTER

(76) Inventors: **Kanghua Chen**, Canton, MI (US); **Sayeed Ahmed**, Canton, MI (US); **Lizhi Zhu**, Canton, MI (US)

Correspondence Address:
SEED INTELLECTUAL PROPERTY LAW GROUP PLLC
701 FIFTH AVE
SUITE 6300
SEATTLE, WA 98104-7092 (US)

(21) Appl. No.: 10/964,000

(22) Filed: Oct. 12, 2004

Related U.S. Application Data

(60) Provisional application No. 60/560,755, filed on Jun. 4, 2004.

Publication Classification

(51) Int. Cl.[7] H05K 7/20

(52) U.S. Cl. 361/707

(57) ABSTRACT

A power converter integrates at least one planar transformer comprising a multi-layer transformer substrate and/or at least one planar inductor comprising a multi-layer inductor substrate with a number of power semiconductor switches physically and thermally coupled to a heat sink via one or more multi-layer switch substrates.

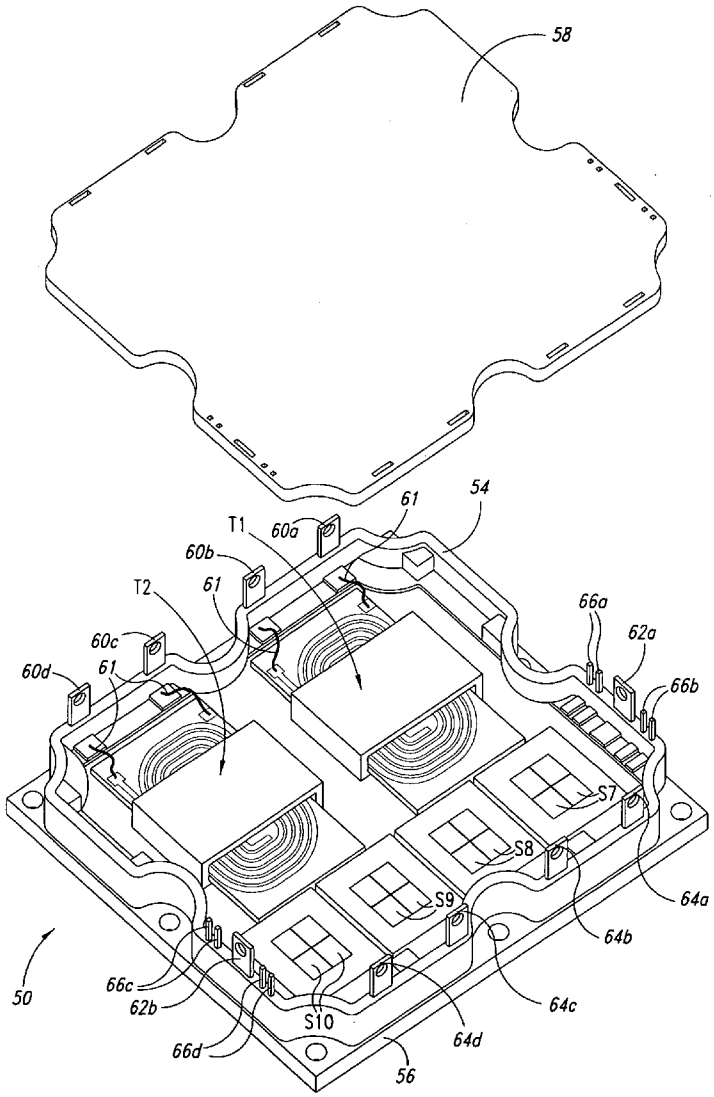

SAMSUNG EXHIBIT 1035

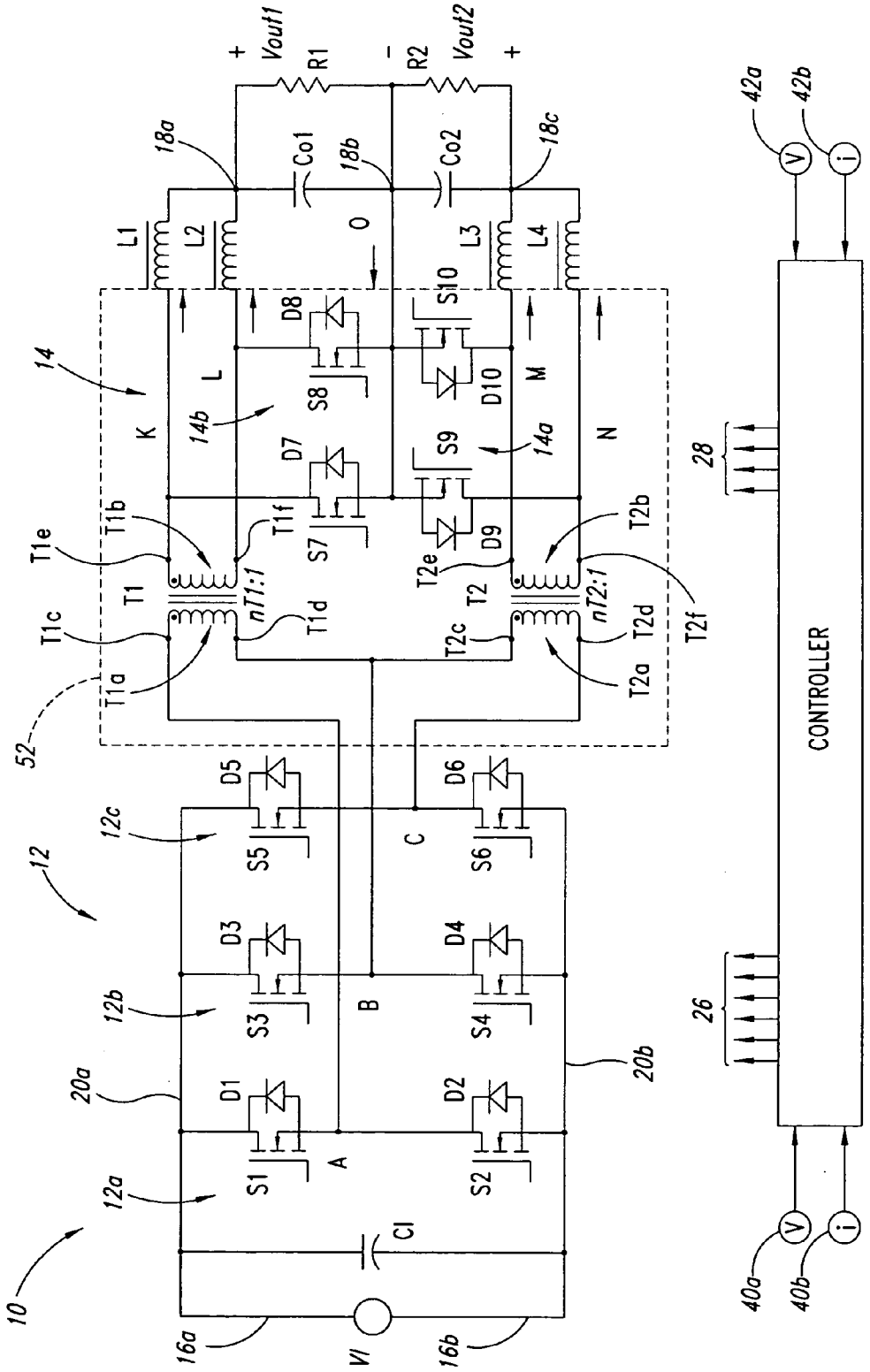

Vout1
Vout2
R1
R2
Co1
Co2
L1
L2
L3
L4
O
D8
S10
S8
D10
D7
S9
S7
D9
K
L
M
N
14
14a
14b
T1
T2
T1a
T1b
T1c
T1d
T1e
T1f
T2a
T2b
T2c
T2d
T2e
T2f
nT1:1
nT2:1
52
D5
D6
S5
S6
D3
D4
S3
S4
D1
D2
S1
S2
A
B
C
12
12a
12b
12c
20a
20b
10
C1
16a
16b
V1
42a
42b
40a
40b
28
26
CONTROLLER

FIG. 1

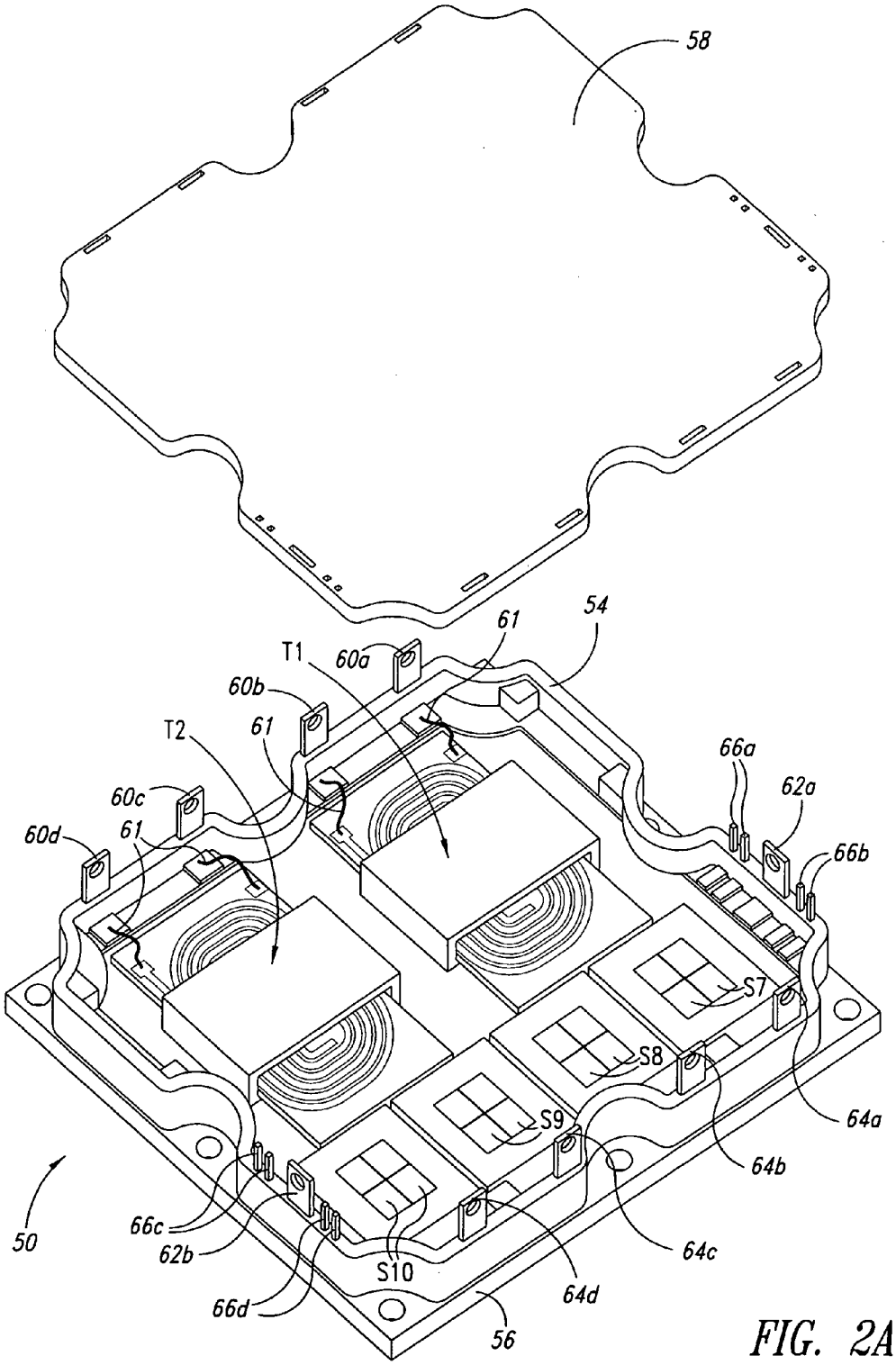
58
54
61
T1
60a
60b
T2
61
60c
60d
61
66a
62a
66b
S7
S8
S9
64a
64b
64c
64d
50
66c
62b
S10
66d
56

FIG. 2A

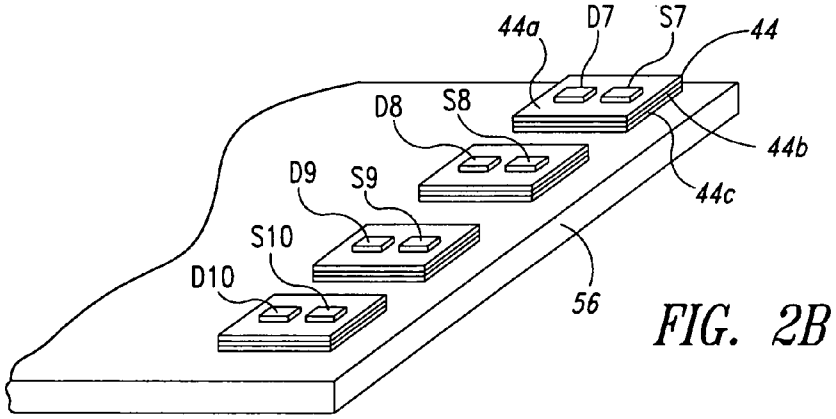

FIG. 2B

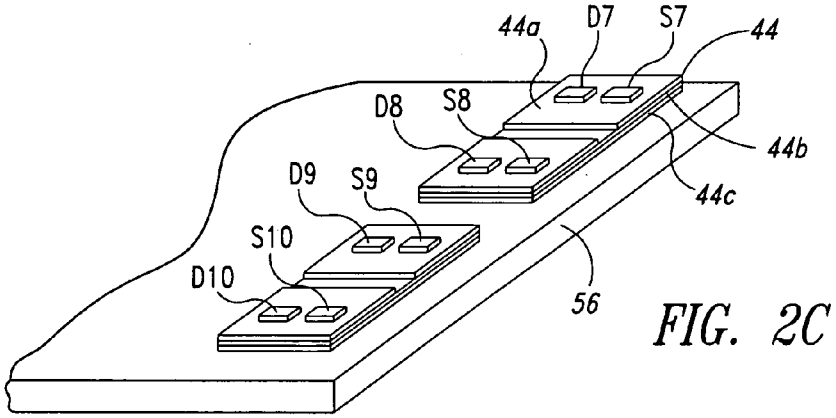

FIG. 2C

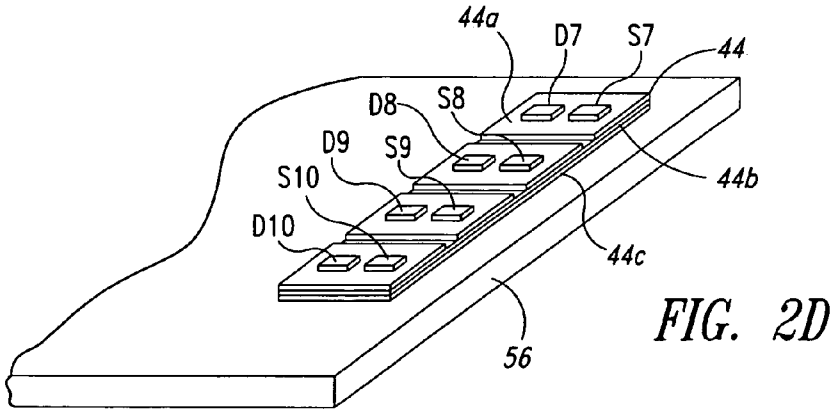

FIG. 2D

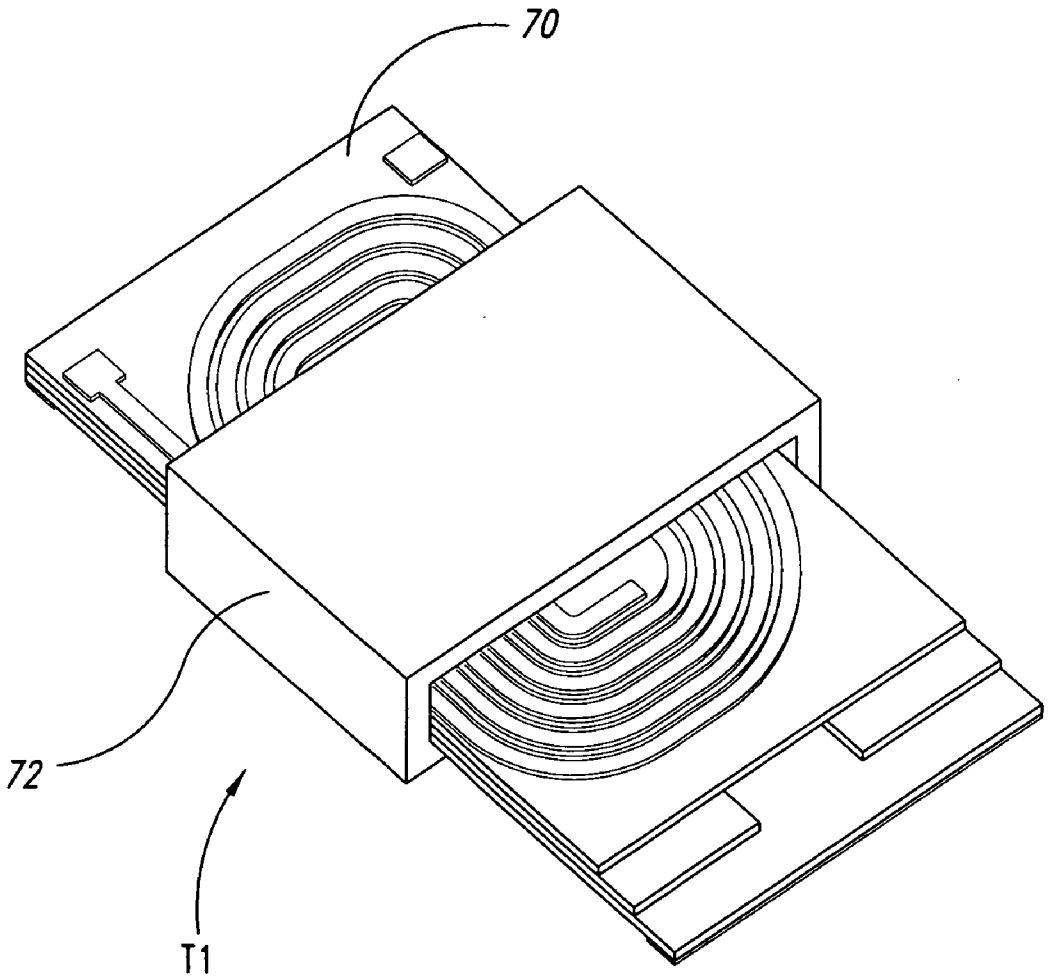

FIG. 3

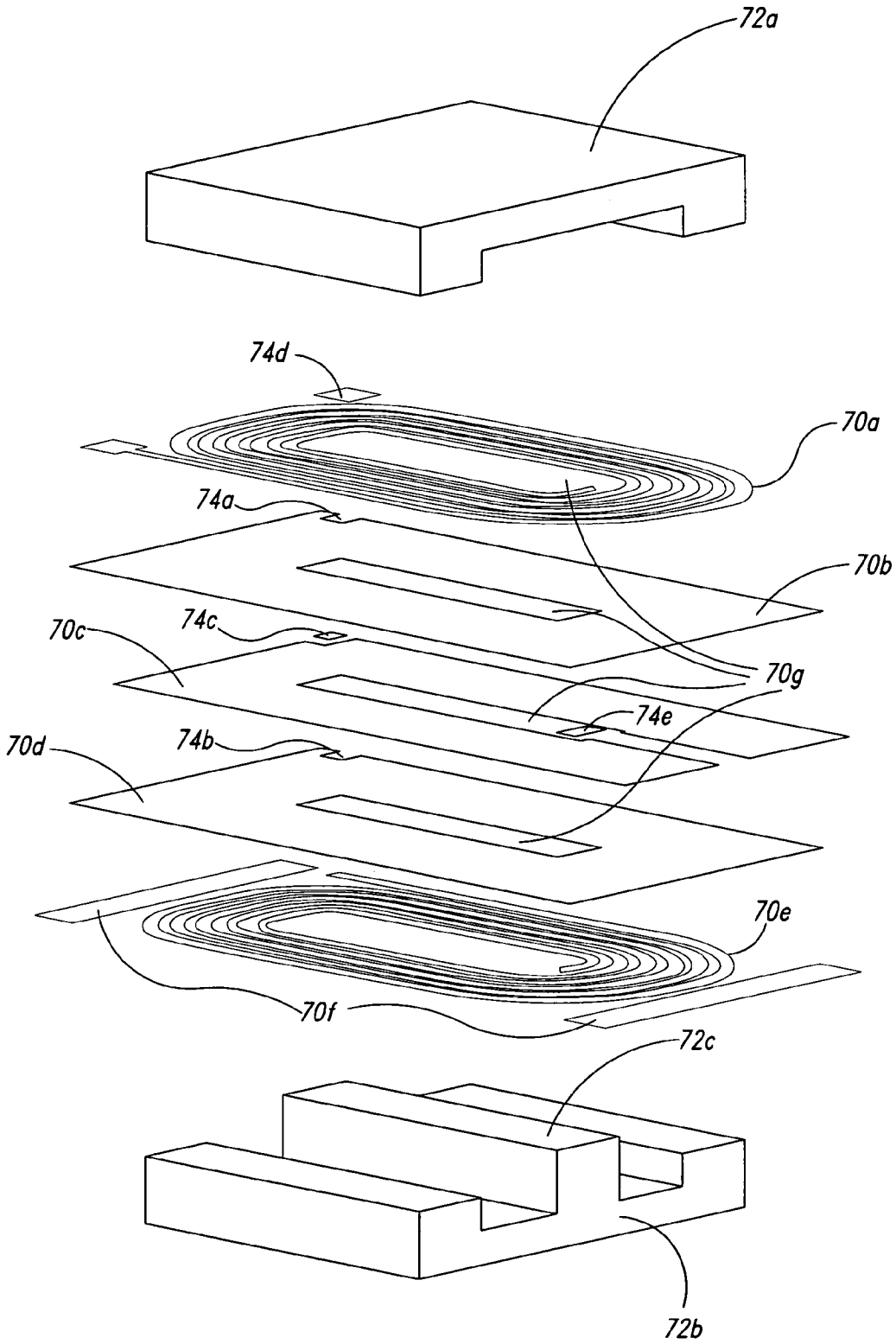

FIG. 4

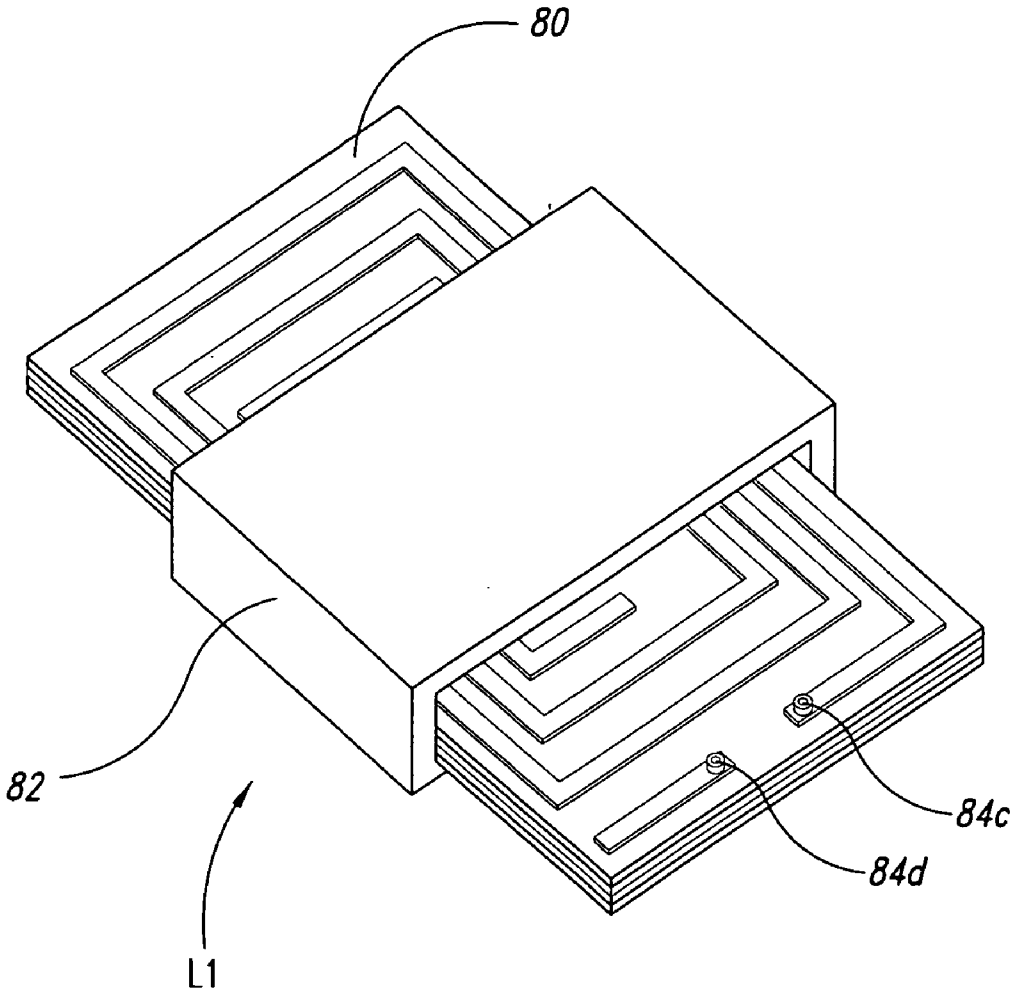

FIG. 5

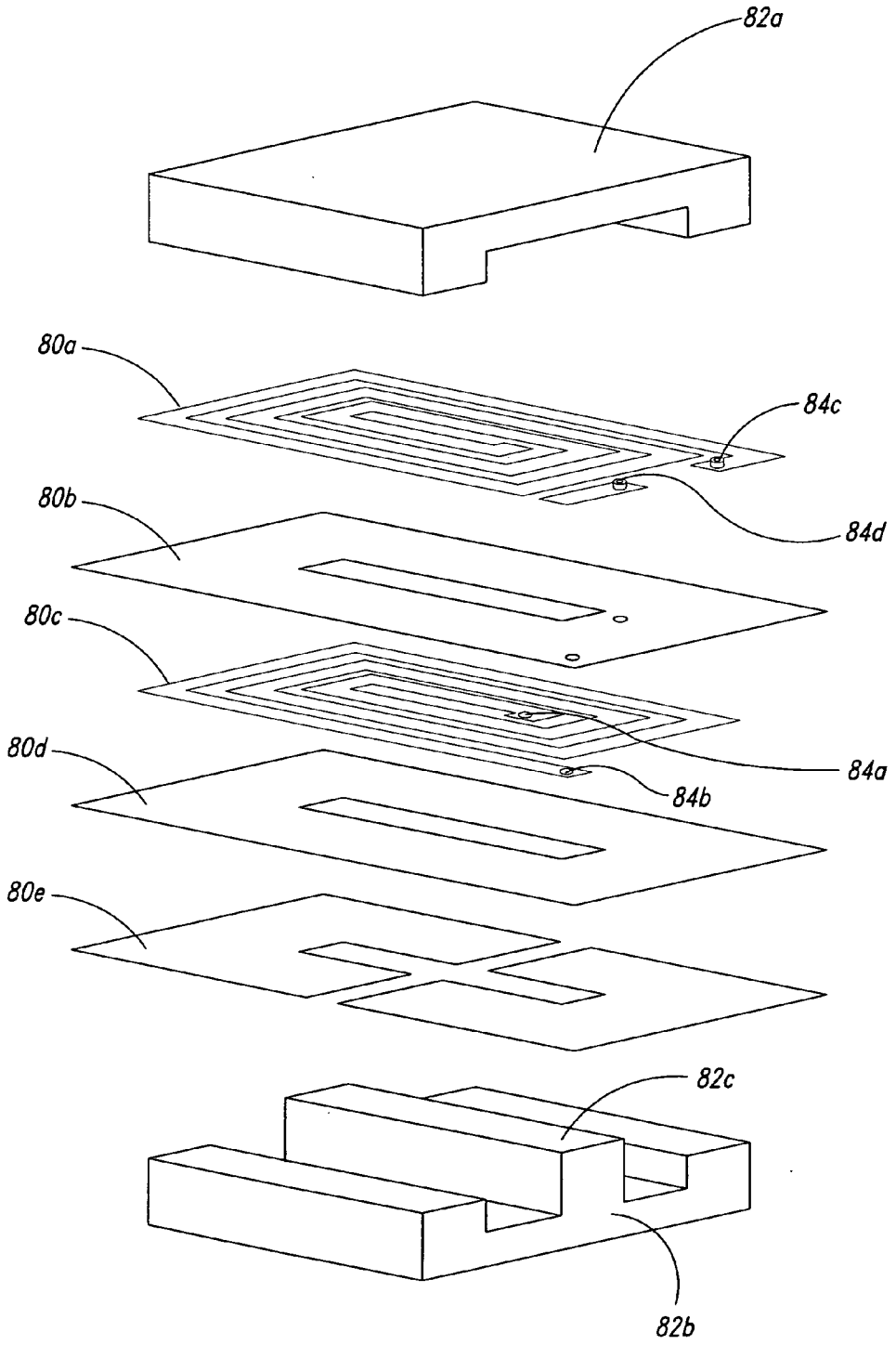

FIG. 6

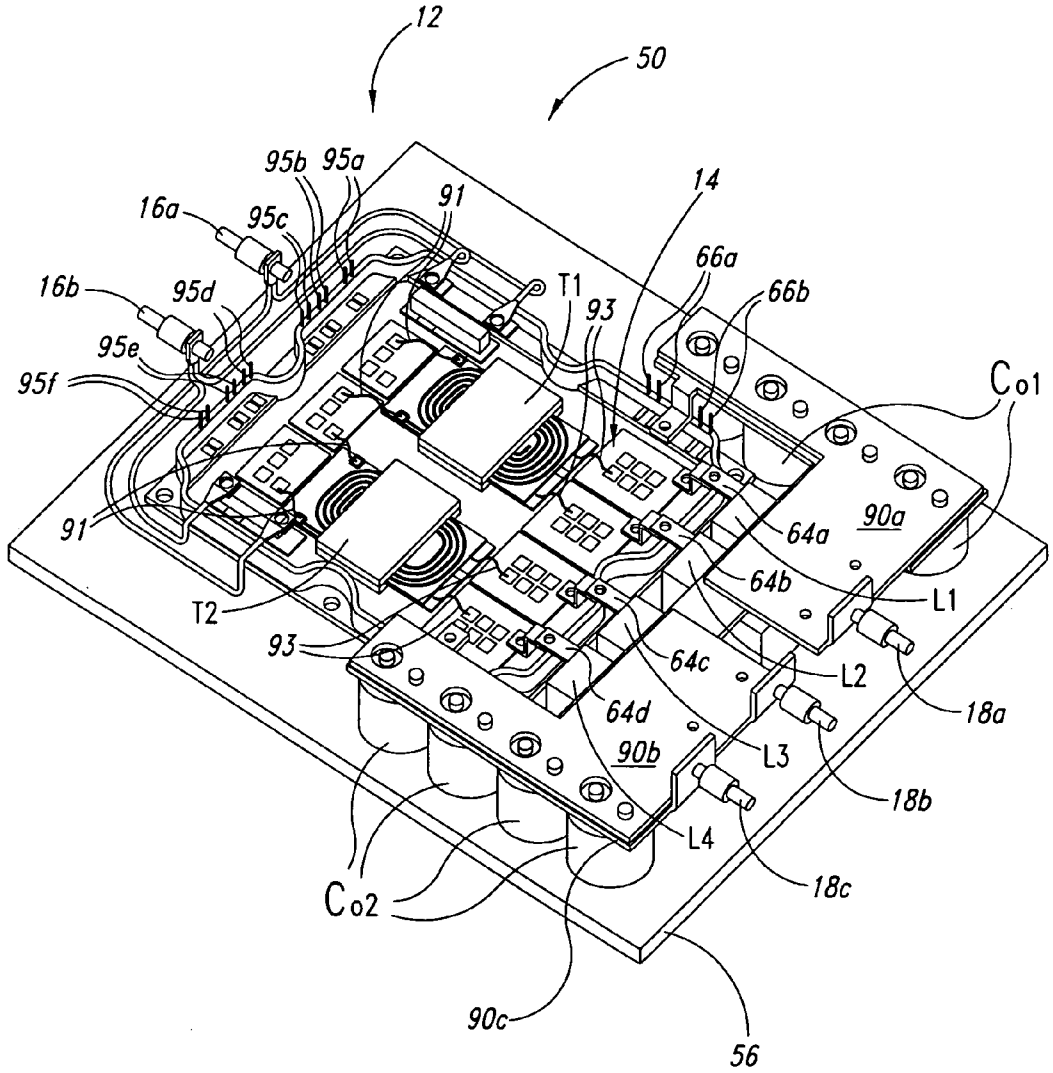
12
50
95b
95a
91
14
16a
95c
66a
16b
95d
T1
66b
93
95e
95f
Co1
91
90a
64a
64b
L1
T2
93
64c
L2
64d
18a
90b
L3
18b
L4
18c
Co2
90c
56

FIG. 7A

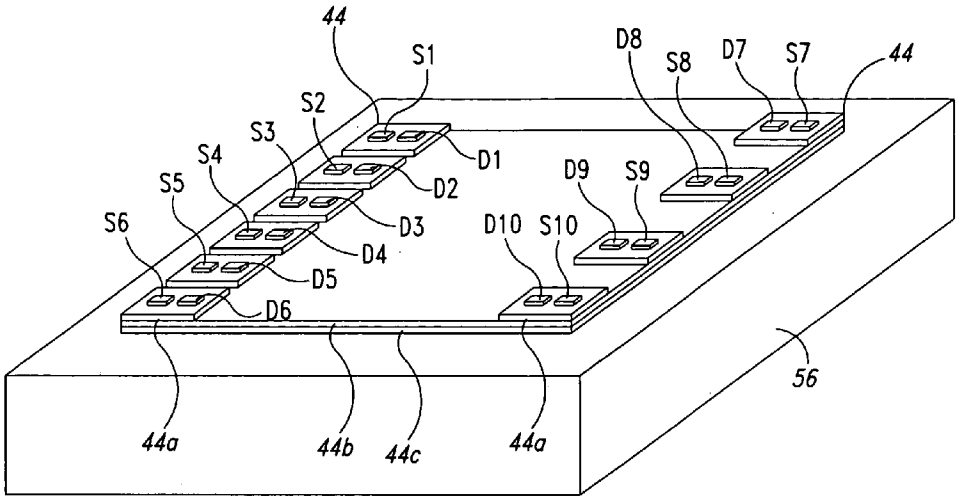
44
S1
D8
S8
D7
S7
44
S2
S3
S4
S5
S6
D1
D2
D3
D4
D5
D6
D9
S9
D10
S10
56
44a
44b
44c
44a

FIG. 7B

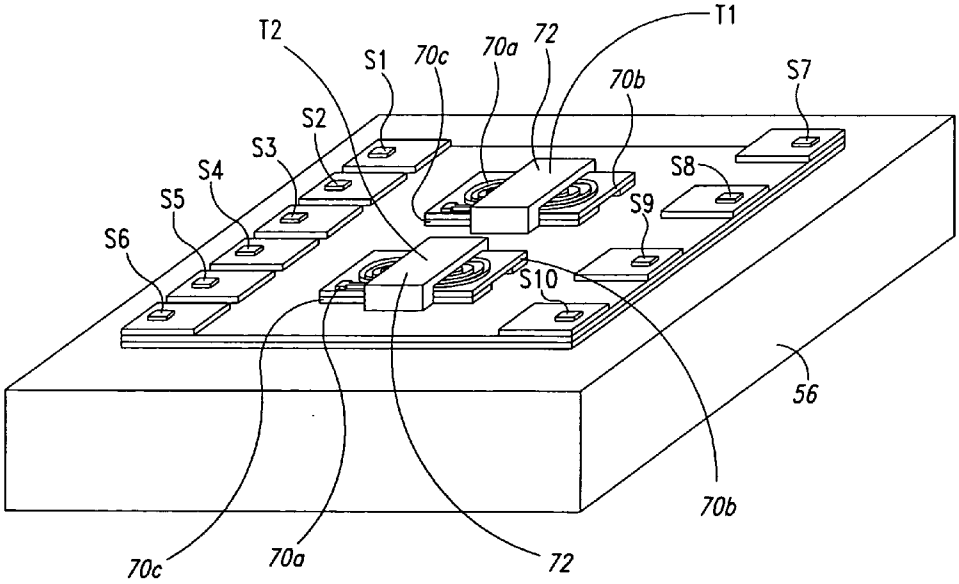
T2
S1
70c
70a
72
T1
70b
S7
S2
S3
S4
S5
S6
S8
S9
S10
56
70b
70c
70a
72

FIG. 7C

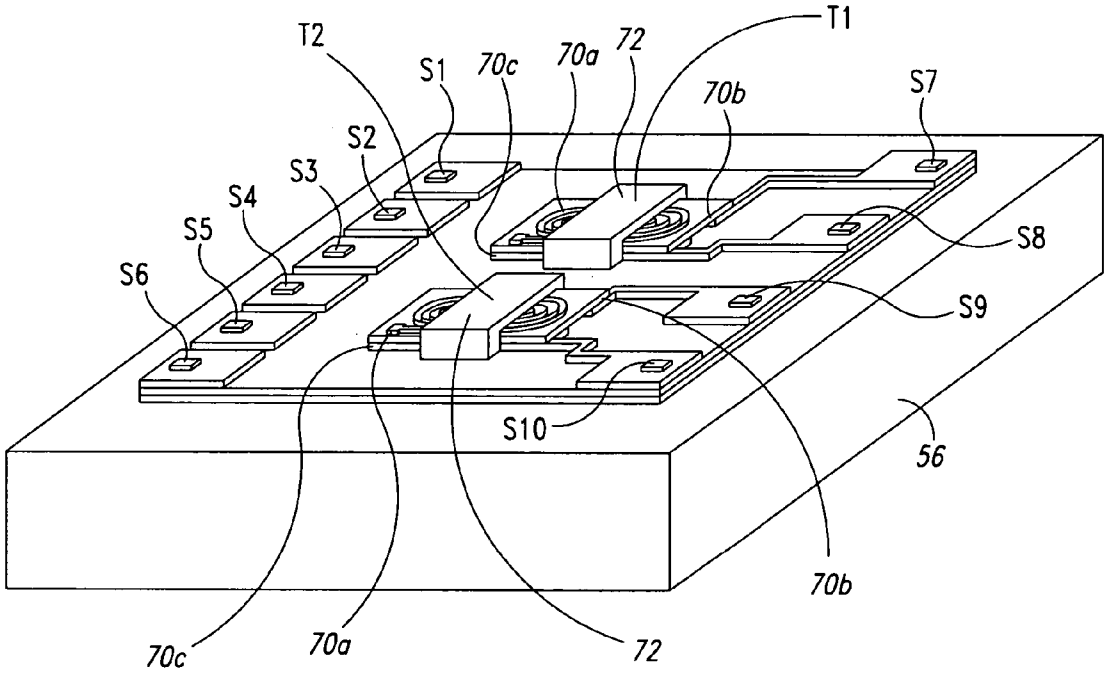

FIG. 7D

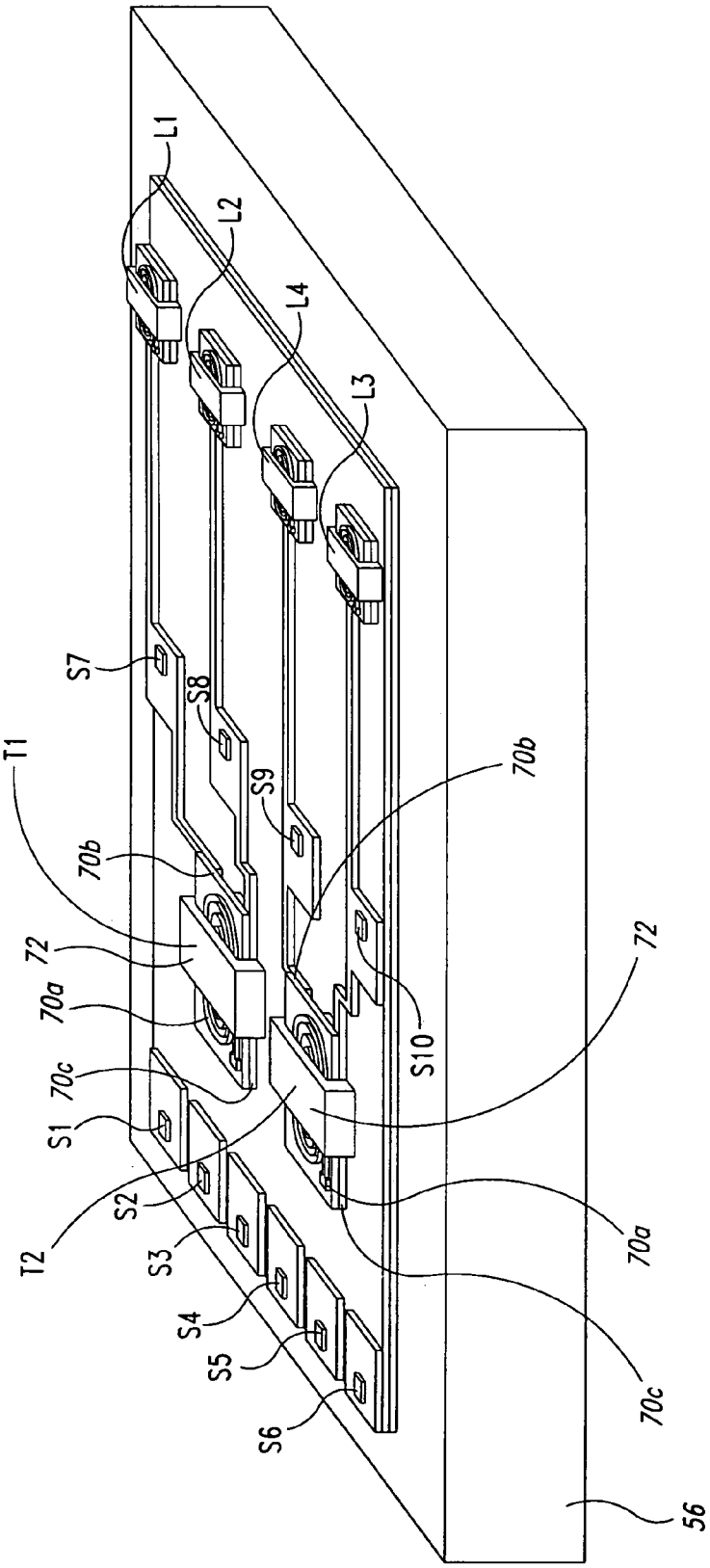
L1
L2
L4
L3
S7
S8
S9
T1
70b
70b
72
70a
70c
S1
S2
T2
S3
S4
S5
S6
S10
72
70a
70c
56

FIG. 7E

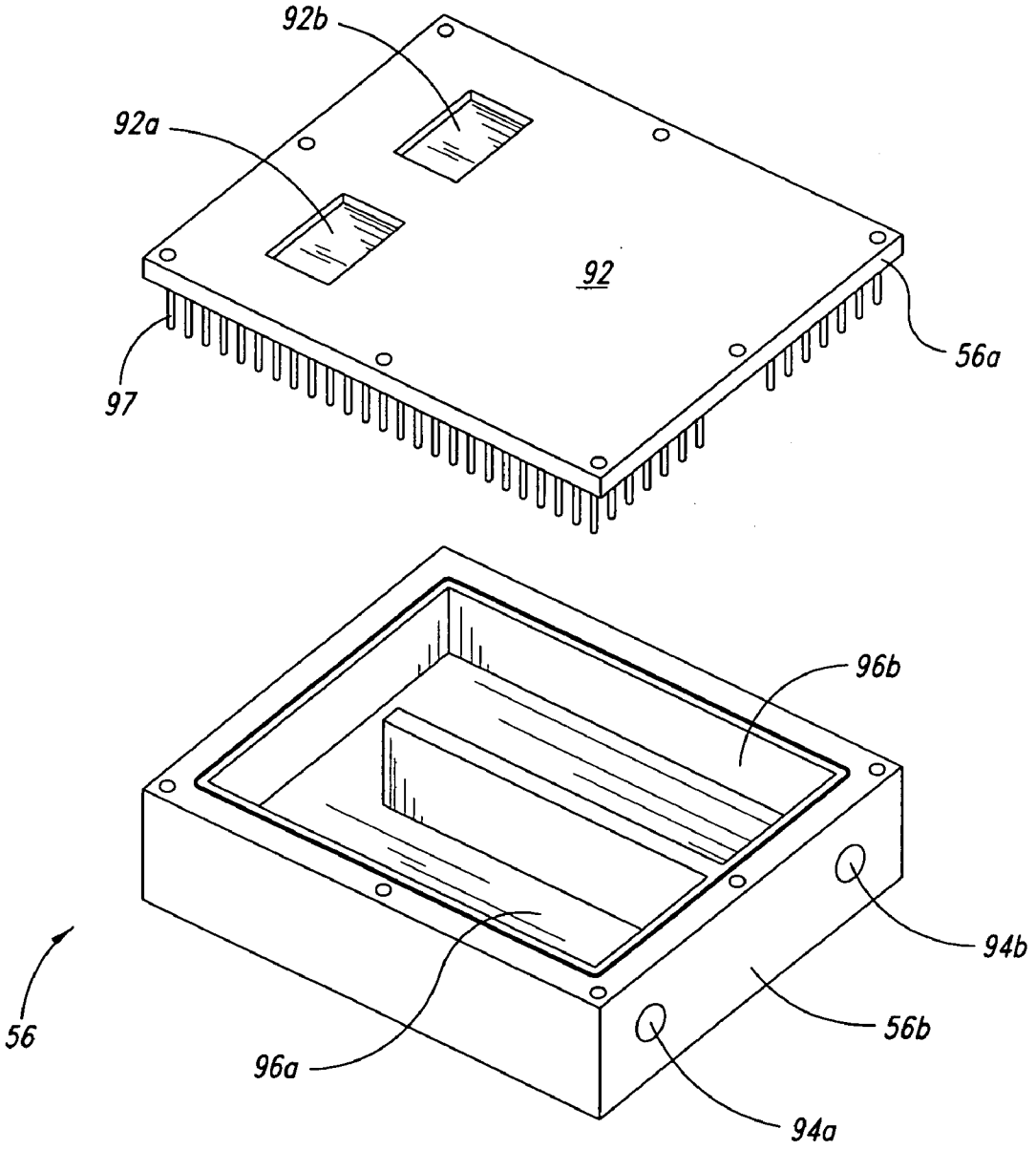

FIG. 8

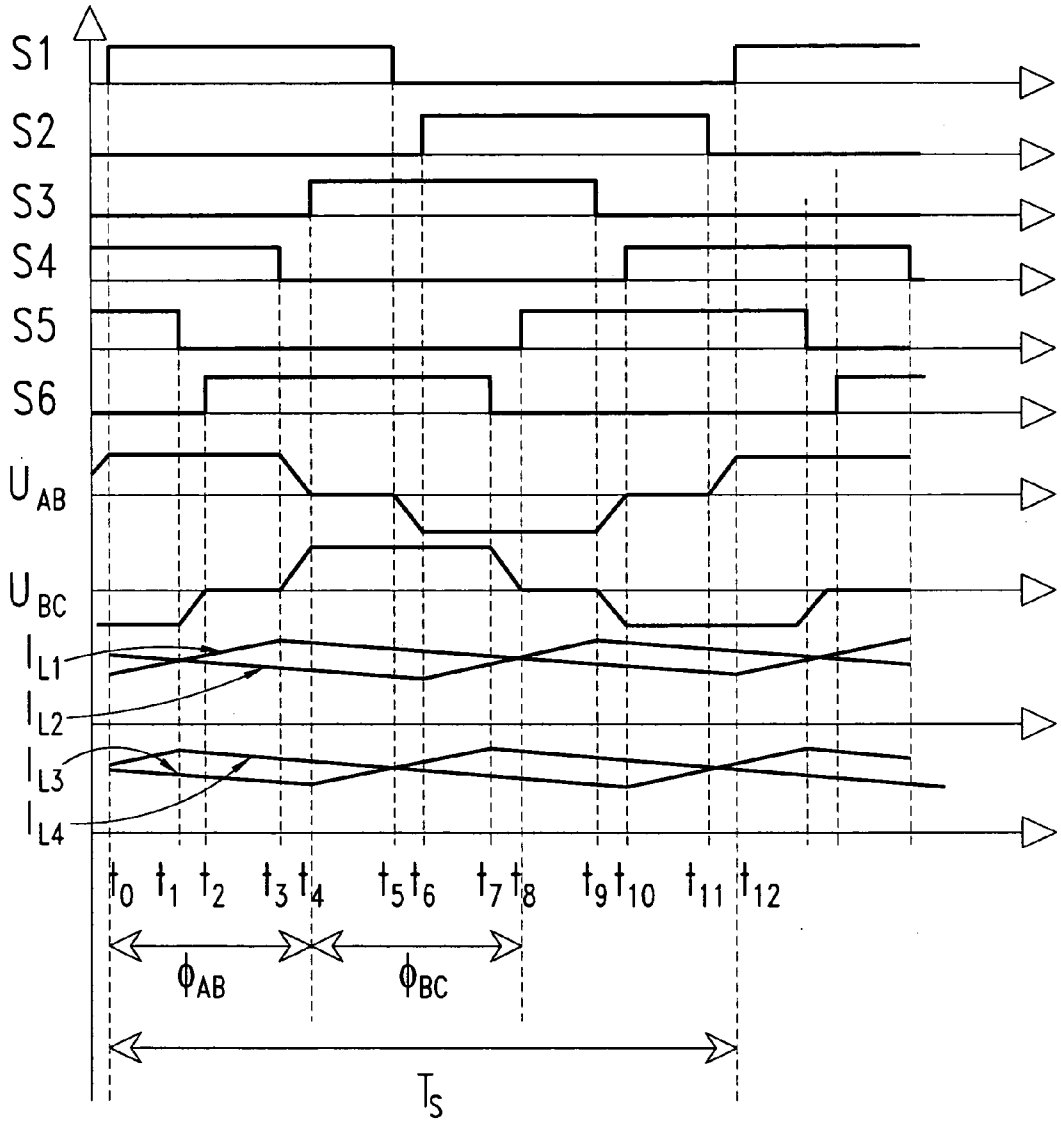
S1
S2
S3
S4
S5
S6
U AB
U BC
I L1
I L2
I L3
I L4
t0 t1 t2 t3 t4 t5 t6 t7 t8 t9 t10 t11 t12
ϕAB
ϕBC
Ts

FIG. 9

INTEGRATION OF PLANAR TRANSFORMER AND/OR PLANAR INDUCTOR WITH POWER SWITCHES IN POWER CONVERTER

BACKGROUND OF THE INVENTION

[0001] 1. Field of the Invention

[0002] This disclosure generally relates to electrical power systems, and more particularly to power module architectures suitable for rectifying, inverting, and/or converting electrical power between power sources and loads.

[0003] 2. Description of the Related Art

[0004] Power modules are typically self-contained units that transform and/or condition power from one or more power sources for supplying power to one or more loads. Power modules commonly referred to as "inverters" transform direct current (DC) to alternating current (AC), for use in supplying power to an AC load. Power modules commonly referred to as "rectifiers" transform AC to DC. Power modules commonly referred to as "DC/DC converters" step up or step down a DC voltage. An appropriately configured and operated power module may perform any one or more of these functions. The term "converter" commonly applies generically to all power modules whether inverters, rectifiers and/or DC/DC converters, and is used herein in that generic sense.

[0005] Many applications employ the delivery of high power, high current and/or high voltage from a power source to a load. For example, transportation applications may employ high power to drive a load such as a traction motor for propelling an electric or hybrid electric vehicle. Such applications may employ one or more of a variety of power sources, for example, energy producing power sources such as arrays of fuel cells or photovoltaic cells, and/or energy storage power sources such as arrays of battery cells and/or super capacitors. Often, such applications employ a power converter to transform and/or condition the power, for example, stepping down the voltage at which the power is supplied to the load.

[0006] Power converters typically employ power semiconductor devices, such as insulated gate bipolar transistors (IGBTs), metal oxide semiconductor field effect transistors (MOSFETs), and/or semiconductor diodes. These power semiconductor devices dissipate large amounts of heat during high power operation, creating thermal management problems which may limit the operating range, increase cost, increase size and/or weight, adversely effect efficiency, and/or reduce reliability of the power converter.

[0007] Methods and, or architectures for power converters capable of high power operation that alleviate the thermal management problems are highly desirable.

BRIEF SUMMARY OF THE INVENTION

[0008] In one aspect, a power converter comprises a heat sink; a magnetic core capable of producing a magnetic field; at least a first multi-layer substrate comprising at least two electrically and thermally conductive layers, and at least one electrically insulative and thermally conductive layer, each of the electrically and thermally conductive layers of the first multi-layer substrate electrically isolated from a next successive one of the electrically and thermally conductive layers by a respective one of the electrically insulative and thermally conductive layers, at least a first one of the electrically and thermally conductive layers patterned to form a first winding, at least a second one of the electrically and thermally conductive layers patterned to form a second winding, at least a portion of each of the first and the second windings disposed within the magnetic field of the magnetic core to form a planar transformer, the first multi-layer substrate thermally coupled to the heat sink; and at least a first power semiconductor device electrically coupled to one of the electrically and thermally conductive layers of the first multi-layer substrate, the first power semiconductor device electrically isolated from and thermally coupled to the heat sink via the first multi-layer substrate.

[0009] In another aspect, a power converter comprises a heat sink; a first multi-layer substrate comprising at least two electrically and thermally conductive layers, and at least one electrically insulative and thermally conductive layer, each of the electrically and thermally conductive layers of the first multi-layer substrate electrically isolated from a next successive one of the electrically and thermally conductive layers by a respective one of the electrically insulative and thermally conductive layers; at least a first power semiconductor device electrically coupled to a portion of an outermost one of the electrically and thermally conductive layers of the first multi-layer substrate, the first power semiconductor device electrically isolated from and thermally coupled to the heat sink via the first multi-layer substrate; a magnetic core capable of producing a magnetic field; and at least a second multi-layer substrate comprising at least two electrically and thermally conductive layers, and at least one electrically insulative and thermally conductive layer, each of the electrically and thermally conductive layers of the second multi-layer substrate electrically isolated from a next successive one of the electrically and thermally conductive layers by a respective one of the electrically insulative and thermally conductive layers, at least a first one of the electrically and thermally conductive layers patterned to form a first winding, at least a second one of the electrically and thermally conductive layers patterned to form a second winding, at least a portion of each of the first and the second windings disposed within the magnetic field of the magnetic core to form a planar transformer, the second multi-layer substrate thermally coupled to the heat sink.

[0010] In still another aspect, a power converter comprises a heat sink; a first multi-layer substrate comprising at least a first layer, a second layer, and third layer, the first layer comprising an electrically and thermally conductive material patterned to from a first inductor, the second layer comprising an electrically insulative and thermally conductive material, and the third layer comprising an electrically and thermally conductive material, the second layer electrically isolating the third layer from the first layer, the third layer of the first multi-layer substrate thermally conductively coupled to the heat sink; at least a first power semiconductor device thermally coupled to a first portion of the first layer; a magnetic core with a magnetic field; and at least a second multi-layer substrate comprising at least a first layer, a second layer, and a third layer, the first layer comprising an electrically and thermally conductive material, the second layer comprising an electrically insulative and thermally conductive material, the third layer comprising an electrically and thermally conductive material, the second layer electrically isolating the third layer from the first layer, the

third layer patterned to form a first winding, the first layer patterned to form a second winding, at least a portion of the first and the second conductive layers disposed within the magnetic field of the magnetic core to form a planar transformer, the second multi-layer substrate thermally conductively coupled to the heat sink.

[0011] In yet another aspect, a power converter comprises: at least a first heat sink; at least a first magnetic core capable of producing a magnetic field; at least a first multi-layer substrate comprising at least two electrically and thermally conductive layers, and at least one electrically insulative and thermally conductive layer, each of the electrically and thermally conductive layers of the first multi-layer substrate electrically isolated from a next successive one of the electrically and thermally conductive layers by a respective one of the electrically insulative and thermally conductive layers, at least a first one of the electrically and thermally conductive layers patterned to form a first winding of at least a first planar transformer and a first winding of a first inductor, at least a second one of the electrically and thermally conductive layers patterned to form a second winding of the first planar transformer, at least a portion of each of the first and the second winding of the planar transformer disposed within the magnetic field of the magnetic core, the first multi-layer substrate thermally coupled to the heat sink; and at least a first power semiconductor device electrically coupled to one of the electrically and thermally conductive layers of the first multi-layer substrate, the first power semiconductor device electrically isolated from and thermally coupled to the heat sink via the first multi-layer substrate.

[0012] In a further aspect, a method of forming a power converter comprises providing a heat sink, providing a number of multi-layer switch substrates, each of the multi-layer switch substrates comprising at least two electrically and thermally conductive layers, and at least one electrically insulative and thermally conductive layer, each of the electrically and thermally conductive layers of the multi-layer switch substrate isolated from a next successive one of the electrically and thermally conductive layers by a respective one of the electrically insulative and thermally conductive layers; for each of the multi-layer switch substrates, soldering at least one respective power semiconductor device to one of the electrically and thermally conductive layers of the multi-layer switch substrate; for each of the multi-layer switch substrates, soldering one of the electrically insulative and thermally conductive layers of the multi-layer switch substrate to the heat sinks; providing a magnetic core; providing a multi-layer transformer substrate comprising at least two electrically and thermally conductive layers, and at least one electrically insulative and thermally conductive layers, each of the electrically and thermally conductive layers of the multi-layer transformer substrate isolated from a next successive one of the electrically and thermally conductive layers by a respective one of the electrically insulative and thermally conductive layers; patterning at least one of the electrically and thermally conductive layers of the multi-layer transformer substrate to form a first winding; patterning at least one of the electrically and thermally conductive layers of the multi-layer transformer substrate to form respective portions of a second winding; disposing at least a portion of each of the first and the second windings within the magnetic field of the magnetic core to form a planar transformer; and soldering one of the electrically insulative and thermally conductive layers of the multi-layer transformer substrate to the heat sink.

BRIEF DESCRIPTION OF THE SEVERAL VIEWS OF THE DRAWING(S)

[0013] In the drawings, identical reference numbers identify similar elements or acts. The sizes and relative positions of elements in the drawings are not necessarily drawn to scale. For example, the shapes of various elements and angles are not drawn to scale, and some of these elements are arbitrarily enlarged and positioned to improve drawing legibility. Further, the particular shapes of the elements as drawn, are not intended to convey any information regarding the actual shape of the particular elements, and have been solely selected for ease of recognition in the drawings.

[0014] **FIG. 1** is an electrical schematic of a power converter according to one illustrated embodiment.

[0015] **FIG. 2A** is a top front left isometric view of a portion of the power converter of **FIG. 1**, with a cover removed from a module housing to show an inverter, a rectifier, two planar transformers, filter inductors, and an integrated base plate heat sink.

[0016] **FIG. 2B** is a top front left isometric view of a portion of an integrated base plate heat sink showing a number of multi-layer switch substrates physically and thermally coupling respective switches of the rectifier to the integrated base plate heat sink according to one illustrated embodiment.

[0017] **FIG. 2C** is a top front left isometric view of a portion of an integrated base plate heat sink showing two multi-layer switch substrates each comprising two distinct areas formed in an electrically and thermally coupled layer to physically and thermally couple respective switches of the rectifier to the integrated base plate heat sink, according to another illustrated embodiment.

[0018] **FIG. 2D** is a top front left isometric view of a portion of an integrated base plate heat sink showing a single multi-layer switch substrate comprising four distinct areas formed in an electrically and thermally coupled layer to physically and thermally couple respective switches of the rectifier to the integrated base plate heat sink, according to another illustrated embodiment.

[0019] **FIG. 3** is a top front left isometric view of one of the planar transformers, according to one illustrated embodiment.

[0020] **FIG. 4** is an exploded top left front isometric view of the planar transformer of **FIG. 3**.

[0021] **FIG. 5** is a top front left isometric view of one of the planar inductor, according to one illustrated embodiment.

[0022] **FIG. 6** is an exploded top left front isometric view of the planar inductor of **FIG. 5**.

[0023] **FIG. 7A** is a top left front isometric view of a power converter according to another illustrated embodiment, in which the inverter and filter inductors are in the module housing.

[0024] **FIG. 7B** is a top front left isometric view of a portion of an integrated base plate heat sink showing a single

multi-layer switch substrate comprising ten distinct areas formed in an electrically and thermally coupled layer to physically and thermally couple respective switches of the rectifier and inverter to the integrated base plate heat sink, according to another illustrated embodiment.

[0025] **FIG. 7C** is a top front left isometric view of a portion of an integrated base plate heat sink showing a single multi-layer substrate comprising ten distinct areas formed in an electrically and thermally coupled layer to physically and thermally couple respective switches of the rectifier and inverter to the integrated base plate heat sink, as well as area for forming the windings of the two transformers, according to another illustrated embodiment.

[0026] **FIG. 7D** is a top front left isometric view of a portion of an integrated base plate heat sink similar to that of **FIG. 7C**, showing the use of one of the electrically and thermally conductive layers of the multi-layer substrate electrically coupling the second side of the transformers to respective terminals of the power semiconductor switches of the rectifier.

[0027] **FIG. 7E** is a top front left isometric view of a portion of an integrated base plate heat sink similar to that of **FIG. 7D**, showing the use of one of the electrically and thermally conductive layers of the multi-layer substrate electrically coupling the second side of the transformers to respective terminals of the power semiconductor switches of the rectifier and to planar inductors.

[0028] **FIG. 8** is a top front left isometric view of the integrated base plate heat sink according to one illustrated embodiment.

[0029] **FIG. 9** is a graph illustrating control signals for controlling operation of the power converter, as well as resulting voltage and current plots, according to one illustrated embodiment.

DETAILED DESCRIPTION OF THE INVENTION

[0030] In the following description, certain specific details are set forth in order to provide a thorough understanding of various embodiments. However, one skilled in the art will understand that the invention may be practiced without these details. In other instances, well-known structures associated with power converters, controllers and/or gate drives have not been shown or described in detail to avoid unnecessarily obscuring descriptions of the embodiments.

[0031] Unless the context requires otherwise, throughout the specification and claims which follow, the word "comprise" and variations thereof, such as, "comprises" and "comprising" are to be construed in an open sense, that is as "including, but not limited to."

[0032] Reference throughout this specification to "one embodiment" or "an embodiment" means that a particular feature, structure or characteristic described in connection with the embodiment is included in at least one embodiment. Thus, the appearances of the phrases "in one embodiment" or "in an embodiment" in various places throughout this specification are not necessarily all referring to the same embodiment. Further more, the particular features, structures, or characteristics may be combined in any suitable manner in one or more embodiments.

[0033] The headings provided herein are for convenience only and do not interpret the scope or meaning of the claimed invention.

[0034] **FIG. 1** shows a power converter **10**, according to one illustrated embodiment in which the power converter **10** takes the form of a DC/DC power converter. The power converter **10** is operable to transform and/or condition power supplied by a power source VI for supply to one or more loads R1, R2. The power-converter **10** may comprise an inverter **12**, a rectifier **14**, and a pair of transformers T1, T2 galvanically coupling the inverter **12** with the rectifier **14**. The power converter **10** may also comprise a pair terminals **16***a*, **16***b*, which may be electrically coupled to receive power from the power source VI. The power source VI may, for example, take the form one or more energy producing power sources such as arrays of fuel cells or photovoltaic cells, and/or may take the form of one or more energy storage power sources such as arrays of battery cells and/or super capacitors. The power converter **10** also comprises a set of terminals **18***a*, **18***b*, **18***c*, which may be electrically coupled to supply power to one or more loads R1, R2.

[0035] The inverter **12** comprises an inverter side bus **20** (collectively) formed by voltage rails **20***a*, **20***b*. The inverter **12** also comprises a first phase leg **12***a* formed by an upper power semiconductor switch S1 and lower power semiconductor switch S2, a second phase leg **12***b* formed by an upper power semiconductor switch S3 and lower power semiconductor switch S4, and a third phase leg **12***c* formed by an upper power semiconductor switch S5 and lower power semiconductor switch S6, each of the phase legs **12***a*-**12***c* electrically coupled between the voltage rails **20***a*, **20***b*. The power semiconductor switches S1-S6 may, for example, take the form of metal oxide semiconductor field effect transistors (MOSFETs), insulated gate bipolar transistors (IGBTs) and/or other switches suitable for high power operation.

[0036] The inverter **12** further comprises power semiconductor diodes D1-D6, electrically coupled in anti-parallel across respective ones of the power semiconductor switches S1-S6. As used herein and in the claims, the term "power semiconductor device" includes semiconductor devices designed to handle large currents, large voltages and/or large amounts of power with respect to standard semiconductor devices, including power semiconductor switches devices, power semiconductor diodes, and other such devices used in power distribution, for example, grid or transportation related applications. In some embodiments, the power semiconductor diodes D1-D6 may be formed as part of the power semiconductor switches S1-S6, for example as body diodes, while in other embodiments the power semiconductor diodes D1-D6 may take the form of discrete semiconductor devices.

[0037] Between the pair of power semiconductor switches S1, S2, S3, S4, S5, S6 forming each phase leg **12***a*, **12***b*, **12***c* respectively, is a phase node A, B, C, upon which the respective phase of a three phase output of the inverter **12** appears during operation. While illustrated as a single switch and diode, each of the power semiconductor switches S1-S6 and/or diodes D1-D6 may take the form of one or more power semiconductor switches and/or diodes electrically coupled in parallel. A controller **24** controls the power semiconductor switches S1-S6 via control signals **26**.

[0038] The inverter **12** may further comprise an input capacitor CI, electrically coupled across the voltage rails **20***a*, **20***b* of the inverter side bus **20**.

[0039] The rectifier **14** may take the form of an active rectifier, such as the current doubler rectifier illustrated in **FIG. 1**. The rectifier **14** comprises a first leg **14***a* formed by an upper power semiconductor switch S7 and lower power semiconductor switch S9, and a second leg **14***b* formed by an upper power semiconductor device switching S8 and lower power semiconductor device switch S10. The rectifier **14** also comprises power semiconductor diodes D7-D10, electrically coupled in anti-parallel across respective ones of the power semiconductor switches S7-S10, respectively. In some embodiments, the power semiconductor diodes D7-D10 may be formed as part of the power semiconductor switches S7-S10, for example as body diodes, while in other embodiments the power semiconductor diodes D7-D10 may take the form of discrete semiconductor devices. While illustrated as a single switch and diode, each of the power semiconductor switches S7-S10 and/or diodes D7-D10 may take the form of one or more power semiconductor switches and/or diodes electrically coupled in parallel.

[0040] A node between each of the first and the second legs **14***a*, **14***b* of the rectifier **14** are electrically coupled to one another to provide a neutral node O for the rectifier **14**. The controller **24** controls the power semiconductor switches S7-S10 via control signals **28**.

[0041] The transformers T1, T2 may be high frequency transformers, which provide galvanic isolation, and voltage step up/step down between the inverter side and the rectifier side of the power converter **10**. Each transformer T1, T2 share half the power of the power converter **10**.

[0042] The first transformer T1 comprises a first side T1*a* and a second side T1*b*. Where power is transferred from the power source VI to the load(s) R1, R2, the first side T1*a* is typically referred to as the primary winding and the second side T1*b* as the secondary winding. In some embodiments, power may transfer in the opposite direction, for example during regenerative braking power may transfer from the "load(s)" R1, R2 (e.g., electric machine) to the "power source" VI (e.g., battery and/or super-capacitor). Consequently, the terms first and second side are used throughout this description and in the claims to generically refer to the windings of the transformers T1, T2 without regard to the direction of power transfer. Likewise, as used throughout this description and in the claims, the load(s) R1, R2 may consume power in a first mode (e.g., driving), while generating power in a second mode (e.g., regenerative braking), and the power supply VI may provide power in the first mode, while consuming or storing power in the second mode. Other modes and operations are possible.

[0043] The first side T1*a* of the first transformer T1 includes a pair of poles T1*c*, T1*d*, and the second side T1*b* also includes a pair of poles T1*e*, T1*f*. Likewise, the second transformer T2 comprises a first side T2*a* and a second side T2*b*. The first side T2*a* of the second transformer T2 includes a pair of poles T1*c*, T1*d*, and the second side T2*b* includes a pair of poles T2*e*, T2*f*. The second side T2*b* of the second transformer T2 is electrically coupled to respective current paths K, L, M, N that form a rectifier side bus which also includes the neutral node O of the rectifier **14**.

[0044] The phase node A of the first phase leg **12***a* of the inverter **12** is electrically coupled to the first pole T1*c* of the first side T1*a* of the first transformer T1. The phase node B of the second phase leg **12***b* of the inverter **12** is electrically coupled to the second pole T1*d* of the first side T1*a* of the first transformer T1, and coupled to the first pole T2*c* of the first side T2*a* of the second transformer T2. The phase node C of the third phase leg **12***c* of the inverter **12** is electrically coupled to the second pole T2*d* of the first side T2*a* of the second transformer T2.

[0045] The first leg **14***a* of the rectifier **14** is electrically coupled between the first pole T1*e* of the second side T1*b* of the first transformer T1 via current path K and the second pole T2*f* of the second side T2*b* of the second transformer T2 via current path N. The second leg **14***b* of the rectifier **14** is electrically coupled between the second pole T1*f* of the second side T1*b* of this first transformer T1 via current path L and the first pole T2*e* of the second side T2*b* of the second transformer T2 via current path M. A filter inductor L1, L2, L3, L4 is electrically coupled between each pole T1*e*, T1*f*, T2*e*, T2*f* of the secondary sides T1*c*, T2*c* of the transformers T1, T2 via the current paths K, L, M, N and the terminals **18***a*-**18***c*. The filter inductors L1-L4 share the load current. Output capacitors C01, C02 are electrically coupled across each pair of the terminals **18***a*-**18***b*, **18***b*-**18***c*.

[0046] The controller **24** provides control signals **26**, **28** to control the power semiconductor switches S1-6 of the inverter **12** and/or the power semiconductor switches S7-S10 of the rectifier **14**, respectively. The controller **24** may take the form of a microcontroller such as a microprocessor, digital signal processor (DSP) and/or application specific integrated circuit (ASIC). Controller **24** may receive input signals such as voltage and current measurements from a voltage sensor **40***a* and/or current sensor **40***b* that sense voltage or current with respect to the input from the power source VI. The controller **24** may additionally or alternatively receive voltage and/or current signals from a voltage sensor **42***a* and/or current sensor **42***b* that measure output voltage and/or current.

[0047] **FIG. 2A** shows a power module **50** according to one illustrated embodiment, the power module **50** housing a portion of the power converter **10** illustrated by broken line box **52** of **FIG. 1**. In particular, the power module **50** comprises an electrically insulative lead frame **54**, an integrated base plate heat sink **56** and an electrically insulative cover **58**, collectively forming a housing. The Figure does not separately call out the power semiconductor diodes D6-D10, which are formed as a part of the power semiconductor switches S6-S10 in this illustrated embodiment. As illustrated in **FIG. 2A**, each of the power semiconductor switches S6-S10 illustrated in **FIG. 1** may actually take the form of one or more (four illustrated) power semiconductor switches S6-S10 electrically coupled in parallel with one another.

[0048] The lead frame **54** supports a number of external terminals or connectors making electrical couplings external from the housing formed by the lead frame **54**, heat sink **56** and cover **58**. For example, the power module **50** may include a number of terminals **60***a*-**60***d* for making electrical couplings between the phase nodes A, B, C of the inverter **12** and the poles of the first sides T1*a*, T2*a* of the transformers T1, T2. In particular, a first terminal **60***a*, electrically couples the phase node A of the inverter **12** to the first pole T1*c* of the transformer T1, via wire bonds **61**. A second

terminal **60***b* and a third terminal **60***c* electrically couple the phase node B of the inverter **12** to the second pole T**1***d* of the first transformer T**1** and the first pole T**2***c* of the second transformer T**2**, respectively, via wire bonds **61**. A fourth terminal **60***d* electrically couples the phase node C of the inverter **12** to the second pole T**2***d* of the second transformer T**2** via wire bonds **61**. While **FIG. 2A** only illustrates one wire bond **61** per electrical coupling, most practical applications with comprise a plurality of wire bonds for each electrical coupling.

[**0049**] Also for example, a number of terminals or connectors electrically couple the rectifier **14** to the filter inductors L**1**-L**4** and to the terminals **18***a*-**18***c* via wire bonds (not shown). For example, a pair of terminals **62***a*, **62***b* electrically couple the neutral node O of the rectifier **12** to the terminal **18***b*. Other terminals **64***a*-**64***d* electrically couple the rectifier **14** and/or second sides T**1***b*, T**2***b* of the transformers T**1**, T**2** to the filter inductors L**1**-L**2**, via the current paths K-N.

[**0050**] Terminals or connectors such as pins **66***a*, **66***b*, **66***c*, **66***d* electrically couple control signals **28** from the controller **24** to the power semiconductor switches S**7**-S**10** of the rectifier **14** via wire bonds (not shown). The pins **66***a*-**66***d* are located proximate the terminal **18***b* which is connected to the neutral node O.

[**0051**] Many of the electrical couplings within the power module **50** are advantageously made via wire bonds. For example, the electrical couplings between the terminals **60***a*-**60***d* and the first side T**1***a*, T**2***a* of the transformers T**1**, T**2**, are made via wire bonds **61**. Also for example, the electrical couplings between the second side T**1***b*, T**2***b* of the transformers T**1**, T**2** and the power semiconductor switches S**7**-S**10** and power semiconductor diodes D**7**-D**10** are made via wire bonds (not shown). Further, the electrical couplings between terminals **62***a*, **62***b*, **64***a*-**64***b* and the power semiconductor switches S**7**-S**10** and power semiconductor diodes D**7**-D**10** are also made via wire bonds (not shown).

[**0052**] **FIGS. 2B-2D** show how the power semiconductor switches S**7**-S**10** and power semiconductor diodes D**7**-D**10** of the rectifier **14** are physically mounted and thermally coupled to the integrated base plate heat sink **56** by one or more multi-layer switch substrates **44**, according to a number of illustrated embodiments. The multi-layer switch substrates **44** comprise a first layer **44***a* that is electrically and thermally conductive, a second layer **44***b* that is electrically insulative and thermally conductive, and a third layer **44***c* that is electrically and thermally conductive. In some embodiments, the multi-layer switch substrate **44** may comprise a greater number of layers.

[**0053**] In particular, **FIG. 2B** shows one embodiment in which a number of multi-layer switch substrates **44** are provided, one for each of the power semiconductor devices S**7**-S**10** and associated power semiconductor diodes D**7**-D**10** forming the rectifier **14**. Thus, this embodiment of **FIG. 2B** may include a total of four separate multi-layer switch substrates **44** for the rectifier **14**.

[**0054**] **FIG. 2C** shows another embodiment in which a number of multi-layer switch substrates **44** are provided, one for each leg **14***a*, **14***b* of the rectifier **14**. In such an embodiment, the electrically and thermally conductive layer **44***a* of each of the multi-layer substrates **44** form distinct areas for mounting each of the power semiconductor devices S**7**-S**11** and associated power semiconductor diodes D**7**-D**10** forming the respective leg **14***a*, **14***b* of the rectifier **14**.

[**0055**] **FIG. 2D** shows still a further embodiment in which a single multi-layer switch substrate **44** is provided for forming entire the rectifier **14**. A number of distinct areas are formed in the first electrically and thermally conductive layer **44***a*, the areas being electrically isolated from one another. In this embodiment, there is one area for each of the power semiconductor devices S**7**-S**10** and associated power semiconductor diodes D**7**-D**10** forming the rectifier **14**, thus a total of four distinct areas.

[**0056**] Generally, the inclusion of fewer individual multi-layer substrates **44**, **70** reduces the parts count, and may reduce the number of manufacturing operations, although forming distinct areas may offset some of the savings in manufacturing operations. However, such a reduction in number is typically accompanied by an increase in size of the remaining multi-layer substrate(s) **44**, **70**. This increase in size increases the stresses to which the multi-layer substrates **44**, **70** are subject, and thus increases the likelihood of defects occurring, such as cracks developing, for example, from solder reflow.

[**0057**] **FIGS. 3 and 4** show one of the transformers T**1** in more detail. The second transformer T**2** may have a similar construction to that of the first transformer T**1**.

[**0058**] The transformer T**1** comprises a multi-layer transformer substrate **70** and magnetic core **72**. The multi-layer transformer substrate **70** includes a first layer **70***a* that is electrically and thermally conductive, a second layer **70***b* that is electrically insulative and thermally conductive, a third layer **70***c* that is electrically and thermally conductive, a fourth layer **70***d* that is electrically insulative and thermally conductive, and a fifth layer **70***f* that is electrically and thermally conductive. The multi-layer transformer substrate **70** may include a greater number of layers to vary the performance of the transformer T**1**, for example, by varying the number of layers and hence the ratio of "turns" between the primary and secondary windings of the transformer and/or by reducing eddy currents.

[**0059**] The first layer **70***a* and fifth layer **70***e* are patterned to form portions of a first winding, and electrically coupled through vias **74***a*, **74***b* and connecting pads **74***c*, **74***d*, **74***e* to form the first winding. The third layer **70***c* is also patterned to form a second winding. While the Figures illustrate the first winding comprising more layers than the second winding, in some embodiments the second winding may comprises more layers than the first winding, or may the first and second windings may comprises the same number of layers.

[**0060**] The fifth layer **70***e* may be further patterned to form mounting areas **70***f* for attaching the multi-layer transformer substrate **70** to the heat sink **56**, for example by soldering. This reduces the coupling area between the multi-layer substrate **70** and the integrated base plate heat sink **56** reducing associated stresses and the likelihood of imperfections developing such as cracking, for example, during solder reflow.

[**0061**] The magnetic core **72** may include two or more portions **72***a*, **72***b* that wrap around the first and second windings of the multi-layer transformer substrate **70**. A portion **72***c* of the magnetic core **72** may be received through

an opening **70***g* formed in each of the layers **70***a*-**70***e* of the multi-layer transformer substrate **70**.

[**0062**] The multi-layer transformer substrate **70** may be formed using a variety of techniques and materials, for example, the multi-layer substrates **70** may take the form of direct bonded copper (DBC) substrates available, for example, from Curamik Electronics of Addison, Tex. Additionally or alternatively, the multi-layer substrates **70** may take the form of insulated metal substrates (IMS) available, for example, from Bergquist Company of Chanhassen, Minn.

[**0063**] The electrically and thermally conductive layers may take a variety of forms such as copper, aluminum and/or other good electrical and thermal conductors. While typically provided in the form of a film, the electrically and thermally conductive layers may take other forms, for example, stamped sheet metal. The electrically insulative and thermally conductive layers may, for example, take the form of a thermally enhanced polyimide film such as Kapton® film, available from Du Pont de Nemours, High Performance Materials of Circleville, Ohio. Additionally, or alternatively, the electrically insulative and thermally conductive layers may, for example, take the from of a suitable ceramic, such as an alumina, aluminum nitride and/or silicon nitride ceramic. In one embodiment, the multi-layer transformer substrate **70** takes the form of layers of stamped sheet metal that are laminated together with insulative layers such as Mylar® film, available from Du Pont de Nemours, High Performance Materials of Circleville, Ohio, using an adhesive such as an epoxy based adhesive.

[**0064**] The multi-layer switch and transformer substrates **44**, **70** may be attached to the integrated base plate heat sink **56** via solder reflow techniques. For example, the power semiconductor switches S**1**-S**10** and power semiconductor diodes D**1**-D**10** may be soldered onto respective multi-layer substrates **44**, **70**, which are then positioned on the integrated base plate heat sink **56**. The multi-layer substrates **44**, **70** are then soldered to the integrated base plate heat sink **56** at a same time and/or in a single act, for example, via heating in an oven using solder reflow techniques.

[**0065**] Alternatively, the multi-layer substrates **44**, **70** may be positioned on the integrated base plate heat sink **56**, the power semiconductor switches S**1**-S**10** and power semiconductor diodes D**1**-D**10** may be positioned on the multi-layer substrates **44**, **70**. The connections between the power semiconductor switches S**1**-S**10** and power semiconductor diodes D**1**-D**10** and between the multi-layer substrates **44**, **70** and the integrated base plate heat sink **56**, may be made at a same time and/or in a single act, for example, via heating in an oven using solder reflow techniques.

[**0066**] **FIGS. 5 and 6** show one of the inductors L**1** formed as a planar inductor, according to one illustrated embodiment. The other inductors L**2**-L**4** may have a similar construction to that of the first planar inductor L**1**. Alternatively, the power converter **10** may employ conventional inductors.

[**0067**] The inductor L**1** comprises a multi-layer inductor substrate **80** and magnetic core **82**. The multi-layer inductor substrate **80** includes a first layer **80***a* that is electrically and thermally conductive, a second layer **80***b* that is electrically insulative and thermally conductive, a third layer **80***c* that is electrically and thermally conductive, a fourth layer **80***d* that is electrically insulative and thermally conductive, and a fifth layer **80***f* that is electrically and thermally conductive. The multi-layer inductor substrate **80** may include a greater number of layers to vary the performance of the planar inductor L**1**, for example, by varying the number of layers and hence the ratio of "turns" of the winding of the inductor and/or by reducing eddy currents.

[**0068**] The first layer **80***a* and third layer **80***c* are patterned to form portions of a first winding, and electrically coupled through vias **84***a*, **84***b* and connecting pads **84***c*, **84***d* to form the first winding.

[**0069**] The magnetic core **82** may include two or more portions **82***a*, **82***b* that wrap around the first winding of the multi-layer inductor substrate **80**. A portion **82***c* of the magnetic core **82** may be received through an opening **80***g* formed in each of the layers **80***a*-**80***e* of the multi-layer inductor substrate **80**.

[**0070**] The multi-layer inductor substrate **80** may be formed using a variety of techniques and materials, for example, the multi-layer substrates **80** may take the form of direct bonded copper (DBC) substrates available, for example, from Curamik Electronics of Addison, Tex. Additionally or alternatively, the multi-layer substrates **70** may take the form of insulated metal substrates (IMS) available, for example, from Bergquist Company of Chanhassen, Minn.

[**0071**] The electrically and thermally conductive layers may take a variety of forms such as copper, aluminum and/or other good electrical and thermal conductors. While typically provided in the form of a film, the electrically and thermally conductive layers may take other forms, for example, stamped sheet metal. The electrically insulative and thermally conductive layers may, for example, take the form of a thermally enhanced polyimide film such as Kapton® film, available from Du Pont de Nemours, High Performance Materials of Circleville, Ohio. Additionally, or alternatively, the electrically insulative and thermally conductive layers may, for example, take the from of a suitable ceramic, such as an alumina, aluminum nitride and/or silicon nitride ceramic. In one embodiment, the multi-layer inductor substrate **80** takes the form of layers of stamped sheet metal that are laminated together with insulative layers such as Mylar® film, available from Du Pont de Nemours, High Performance Materials of Circleville, Ohio, using an adhesive such as an epoxy based adhesive.

[**0072**] The multi-layer switch and inductor substrates **44**, **70** may be attached to the integrated base plate heat sink **56** via solder reflow techniques. For example, the power semiconductor switches S**1**-S**10** and power semiconductor diodes D**1**-D**10** may be soldered onto respective multi-layer substrates **44**, **80**, which are then positioned on the integrated base plate heat sink **56**. The multi-layer substrates **44**, **80** are then soldered to the integrated base plate heat sink **56** at a same time and/or in a single act, for example, via heating in an oven using solder reflow techniques.

[**0073**] Alternatively, the multi-layer substrates **44**, **80** may be positioned on the integrated base plate heat sink **56**, the power semiconductor switches S**1**-S**10** and power semiconductor diodes D**1**-D**10** may be positioned on the multi-layer substrates **44**, **70**. The connections between the power semi-

conductor switches S1-S10 and power semiconductor diodes D1-D10 and between the multi-layer substrates **44**, **80** and the integrated base plate heat sink **56**, may be made at a same time and/or in a single act, for example, via heating in an oven using solder reflow techniques.

[0074] The described techniques may reduce the number of acts involved in manufacturing the power module thereby reducing manufacturing costs, and also subject the various elements to less thermal cycles advantageously increasing reliability and throughput.

[0075] **FIG. 7A** shows the power module **50** according to another illustrated embodiment, housing the entire power converter **10** of **FIG. 1**, other than the controller **24**. In particular, the power module **50** of **FIG. 7A** includes the inverter **12**, rectifier **14** and transformers T1, T2. A pair of terminals **20***a*, **20***b* allow electrical connections to be made to the power source VI. Three terminals **18***a*, **18***b*, **18***c* allow electrical connections to be made to the load(s) R1, R2. The terminals **18***a*, **18***c* may be formed as bus bars **90***a*, **90***b*. Terminals or connectors such as pins **95***a*-**95***f*, receive control signals **26** from the controller **24** for operating the power semiconductor switches S1-S6 of the inverter. The power semiconductor switches S1-S6 and associated power semiconductor diodes D1-D6 of the inverter **12** may advantageously be electrically coupled to the first sides T1*a*, T2*a* of the transformers T1, T2 via wire bonds **91**, only a few of which are illustrated. The first sides T1*a*, T2*a* of the transformers T1, T2 may advantageously be electrically coupled to the power semiconductor switches S7-S10 and associated power semiconductor diodes D7-D10 of the rectifier **14** via wire bonds **93**, only a few of which are illustrated.

[0076] In the embodiment of **FIG. 7A**, the power module **50** may include one or more additional multi-layer switch substrates **44** for mounting the power semiconductor switches S1-S10 and associated power semiconductor diodes D1D10 forming the inverter **12** to the integrated base plate heat sink **56**.

[0077] For example, the power module **50** may comprise a separate multi-layer switch substrate **44** for each of the power semiconductor switches S1-S6 and associated power semiconductor diodes D1-D6 pairs of the inverter **12**, in fashion similar to that shown in **FIG. 2B** for the rectifier **14**. Thus, the power module **50** may include six separate multi-layer switch substrates **44** for the inverter **12**.

[0078] Also for example, the power module **50** may comprise a separate multi-layer switch substrate **44** for each phase leg **12***a*-**12***c* of the inverter **12**. The electrically conductive layer **44***a* of each multi-layer switch substrate **44** is formed into two distinct areas, one for each of the power semiconductor switches S1-S6 and associated power semiconductor diodes D1-D6 of the respective phase leg **12***a*-**12***c*, in a similar fashion to that of **FIG. 2D** for the rectifier **14**. Thus, the power module **50** may include three additional multi-layer switch substrates **44** for the inverter **12**.

[0079] In a further example, the power module **50** may comprise a single additional multi-layer switch substrate **44** for mounting all of the power semiconductor switches S1-S6 and associated power semiconductor diodes D1-D6 of the inverter **12**, in a similar fashion to that of **FIG. 2D** for the rectifier **14**. Thus, the multi-layer switch substrate **44** may include six distinct areas formed in the electrically and thermally conductive layer **44***a*, one area for each power semiconductor S1-S6 and associated diode D1-D6 pair.

[0080] In addition to the embodiments discussed above, a further embodiment illustrated in **FIG. 7B** shows a single multi-layer switch substrate **44** for mounting the power semiconductor switches S1-S6 and associated power semiconductor diodes D1-D6 forming the inverter **12**, along with the power semiconductor devices S7-S10 and associated power semiconductor diodes D7-D10 forming the rectifier **14**. Thus, such an embodiment may include ten distinct areas formed in the first electrically and thermally conductive layer **44***a*, the areas electrically isolated from one another.

[0081] **FIG. 7C** shows a single multi-layer switch substrate **70** comprising at least three electrically and thermally conductive layers **70***a*, **70***c*, **70***e* and at least two electrically insulative and thermally conductive layers **70***b*, **70***d* separating respective pairs of the electrically and thermally conductive layers **70***a*-**70***c*, **70***c*-**70***e*. The second electrically and thermally conductive layer **70***c* of the multi-layer switch substrate **70** form ten distinct areas. The areas are electrically isolated from one another, for mounting the power semiconductor switches S1-S6 and associated power semiconductor diodes D1-D6 (not shown in **FIG. 7C**) forming the inverter **12**, and the power semiconductor devices S7-S10 and associated power semiconductor diodes D7-D10 (not shown in **FIG. 7C**) forming the rectifier **14**, in a similar fashion to that illustrated in **FIG. 7B**. At least the first and third electrically and thermally conductive layers **70***a*, **70***e*, are patterned and electrically coupled to one another to form a first winding of a transformer T1, T2. At least the second electrically and thermally conductive layer **70***c* is patterned to form a second winding of the transformer T1, T2.

[0082] While **FIG. 7C** illustrates three electrically and thermally conductive layers **70***a*, **70***c*, **70***e* and two electrically insulative and thermally conductive layers **70***b*, **70***d*, the multi-layer substrate **70** may include a greater number of layers. Further while the power semiconductor devices S1-S10, D1-D10 are illustrated as mounted to the second electrically and thermally conductive layer, some or all of those power semiconductor devices may be mounted on other ones of the electrically and thermally conductive layers.

[0083] **FIG. 7D** shows a portion of an integrated base plate heat sink similar to that of **FIG. 7C**, illustrating the use of one of the second electrically and thermally conductive layer **70***c* of the multi-layer substrate **70** to electrically couple the second sides T1*b*, T2*b* of the transformers T1, T2 to respective terminals (e.g., drain/collector) of the power semiconductor switches S7-S10 and/or power semiconductor diodes D7-D10 of the rectifier **14**, advantageously eliminating a number of the wire bonds. Other embodiments may employ the same or other electrically and thermally conductive layers **70***a*, **70***c*, **70***e*, in a similar manner, for example, to eliminate wire bonds.

[0084] **FIG. 7E** shows a portion of an integrated base plate heat sink similar to that of **FIG. 7D**, illustrating the use of one of the second electrically and thermally conductive layer **70***c* of the multi-layer substrate **70** to electrically couple the second sides T1*b*, T2*b* of the transformers T1, T2 to respective terminals (e.g., drain/collector) of the power semiconductor switches S7-S10 and/or power semiconductor diodes D7-D10 of the rectifier **14**, and to planar inductors L1-L4,

advantageously eliminating a number of the wire bonds. Other embodiments may employ the same or other electrically and thermally conductive layers **70***a*, **70***c*, **70***e*, in a similar manner, for example, to eliminate wire bonds.

[**0085**] **FIG. 8** shows the integrated base plate heat sink **56** according to one embodiment. The integrated base plate heat sink **56** may comprise a plate section **56***a* and conduit section **56***b*. The plate section **56***a* includes a top surface **92** having a pair of recesses **92***a*, **92***b* sized and dimensioned to receive a portion of the magnetic core **72** such as the portion **72***b* such that the multi-layer transformer substrate **70** is flush with the surface **92**. The conduit section **56***b* comprises an inlet **94***a*, an outlet **94***b* and a passage formed by first passage section **96***a* and second passage section **96***b* which are fluidly communicatingly coupled with the intake **94***a* and outtake **94***b*. The plate **92** may include thermal radiating structures such as fins or pins **97** on a surface opposed to the top surface **92** which are received in the portions **96***a*, **96***b* for transferring heat from the plate **56***a* to a fluid passing through the conduit portions **96***a*, **96***b*. The power converter **10** may include a circulation system (not shown) including, for example, a pump, compressor, and/or fan for circulating fluid through the conduit portions **96***a*, **96***b* to assist in transferring heat from the integrated base plate heat sink **56**. While shown as an integrated base plate heat sink **56**, other embodiment may employ other forms of heat sinks.

[**0086**] **FIG. 9** shows a timing diagram illustrating switching signals applied to the semiconductor switches S1-S6 of the inverter **12**, the voltage U_{AB} applied to the first side T1*a* of the transformer T1 and the voltage U_{BC} applied to the first side T2*a* of the second transformer T2 at various time intervals t_0-t_{12} over a period T_S. **FIG. 9** also shows the current output I_{L1}-I_{L4} of the filter inductors L1-L4, respectively.

[**0087**] The power semiconductor switches S1-S6 (**FIG. 1**) of each phase leg **12***a*-**12***c* of the inverter **12** each generate a nearly 50% duty cycle square waveform. The first and second phase legs **12***a*, **12***b* of the inverter **12** are phase shift controlled to generate a three-level square waveform U_{AB} applied to the first side or winding T1*a* of the first transformer T1. The second leg **12***b* and third leg **12***c* of the inverter **12** are phase shifted controlled to generate a three-level square wave form U_{BC} to the first side or winding T2*a* of the second transformer T2. Thus, phase B is shared by the transformers T1, T2 to form the equivalent of two conventional full bridge DC/DC converters, while advantageously saving one high voltage leg (i.e., at least two power semiconductor switches and associated power semiconductor diodes) and gate driver circuit.

[**0088**] The two outputs U_{AB} and U_{BC} are phase locked to each other, so that the second phase leg **12***b* (phase B) can achieve a wide soft-switching range by means of the load current in the transformers T1. The soft switching is achieve by the energy stored in the filter inductors L1-L4, without relying on the energy stored in the leakage inductance of the transformers T1. The output voltage Vout1 is regulated by a phase shift angle ϕ_{AB}, and the output voltage Vout2 is regulated by a phase shift angle ϕ_{BC}.

[**0089**] The power converter **10** can be configured as either single output or dual output. In single output configuration, the outputs Vout1 and Vout2 are paralleled together to double the output current/power. If Vout1 and Vout2 are paralleled together in a single output voltage configuration, the phase shift angles ϕ_{AB}, ϕ_{BC} are equal. In the dual output configuration Vout1 and Vout2 may be controlled independently.

[**0090**] The interleaved full bridge DC/DC power converter **10** described above doubles output power capability while operating at a high coolant temperature (e.g., 105° C.) and maintaining current and thermal stress at acceptable levels to provide high reliability. Soft switching is achieved over a wide range of loads, reducing switching losses and providing high efficiency operation by means of the load currents in the transformers T1, T2 and filter inductors L1-L4. Thus, the described power converter may efficiently provide high power conversion, with high power density and high coolant temperature. The interleaving also advantageously reduces high frequency ripple current to the input and output capacitors CI, CO1, CO1. Sharing of a phase leg **12***a*-**12***c* of the inverter **12** allows the use of one less inverter phase leg (i.e., at least two power semiconductor switches and associated diodes) than would typically be required, reducing parts count, complexity, and cost while increasing reliability. The power converter **10** is further easily configurable as either a single or dual output unit.

[**0091**] The integration of planar transformers and/or planar inductors in the power converter **10** described above, avoids or reduces the use of conventional air-cooled heavy copper printed circuit board windings and traditional wound wire inductors. The integration of planar transformers and/or planar inductors may allow a reduction in Ohmic losses and inductance related to contacts, which are particularly problematic at high frequencies, by employing direct wire bonding connections as described above. Leakage inductance and AC loss may be reduced by employing the flat winding structure of the planar transformers T1, T2 and/or the planar inductors L1, L2, L3, and L4. The use of planar transformers and/or planar inductors in the described power converter **10** may advantageously allow an increase in the magnetic core window utilization ratio, a reduction in the magnetic core value, and an increase in power density. The power converter **10** described above may also provide enhanced EMI performance.

[**0092**] Although specific embodiments of and examples for the power converter and method are described herein for illustrative purposes, various equivalent modifications can be made without departing from the spirit and scope of the invention, as will be recognized by those skilled in the relevant art. The teachings provided herein can be applied to power converters, not necessarily the DC/DC interleaved power converter with planar transformers or planar inductors generally described above.

[**0093**] For example, the power converter **10** may share the first or third phase legs **12***a*, **12***c*, rather than the second phase leg **12***b*. Also for example, the teachings are not limited to a three phase inverter **12**, but may be applied to inverters with an even greater number of phase legs, for example, to provide even high power. For example, the power converter **10** may comprise a fourth phase leg added to the inverter **12**, and a third transformer electrically coupled between the third phase leg **12***c* and the added phase leg. The power converter may also comprise two filter inductors, along with adding power semiconductor switches and associated diodes to the rectifier which are supplied

from the second side of the third transformer to provide a power increase of 50%. Also for example, synchronized rectification is optional, and may be omitted in some embodiments, for example being replaced by a diode rectifier. As a further example, the integrated planar transforms or planar inductors may be advantageously employed in other power converters such as inverters and/or rectifiers. As an even further example, the interleaving may be advantageously employed without the integrated planar transformers or planar inductors.

[**0094**] The various embodiments described above can be combined to provide further embodiments. All of the U.S. patents, U.S. patent application publications, U.S. patent applications, foreign patents, foreign patent applications and non-patent publications referred to in this specification and/or listed in the Application Data Sheet, including but not limited to commonly assigned U.S. patent application Ser. No. 10/738,926 filed Dec. 16, 2003, and entitled "Power Module With Heat Exchange"; U.S. patent application Ser. No. 10/688,834, filed Oct. 16, 2003, and entitled "Power Converter Employing A Planar Transformer"; U.S. patent application Ser. No. 10/861,241, filed Jun. 4, 2004, and entitled "Integration of Planar Transformer and Power Switches in Power Converter," which was converted to provisional patent application Ser. No. 60/560,755; and U.S. patent application Ser. No. 10/861,319, filed Jun. 4, 2004, and entitled "Interleaved Power Converter," are incorporated herein by reference, in their entirety. Aspects of the invention can be modified, if necessary, to employ systems, circuits and concepts of the various patents, applications and publications to provide yet further embodiments of the invention.

[**0095**] These and other changes can be made to the invention in light of the above-detailed description. In general, in the following claims, the terms used should not be construed to limit the invention to the specific embodiments disclosed in the specification and the claims, but should be construed to include all power converters. Accordingly, the invention is not limited by the disclosure, but instead its scope is to be determined entirely by the following claims.

1. A power converter, comprising:

a heat sink;

a magnetic core capable of producing a magnetic field;

at least a first multi-layer substrate comprising at least two electrically and thermally conductive layers, and at least one electrically insulative and thermally conductive layer, each of the electrically and thermally conductive layers of the first multi-layer substrate electrically isolated from a next successive one of the electrically and thermally conductive layers by a respective one of the electrically insulative and thermally conductive layers, at least a first one of the electrically and thermally conductive layers patterned to form a first winding, at least a second one of the electrically and thermally conductive layers patterned to form a second winding, at least a portion of each of the first and the second windings disposed within the magnetic field of the magnetic core to form a planar transformer, the first multi-layer substrate thermally coupled to the heat sink; and

at least a first power semiconductor device electrically coupled to one of the electrically and thermally conductive layers of the first multi-layer substrate, the first power semiconductor device electrically isolated from and thermally coupled to the heat sink via the first multi-layer substrate.

2. The power converter of claim 1 wherein the first power semiconductor device is surface mounted to an outer most one of the electrically and thermally conductive layers of the first multi-layer substrate.

3. The power converter of claim 1 wherein the first power semiconductor device is surface mounted to an inner one of the electrically and thermally conductive layers of the first multi-layer substrate.

4. The power converter of claim 1, further comprising:

at least a first planar inductor electrically coupled to one of the electrically and thermally conductive layers of the first multi-layer substrate.

5. The power converter of claim 4 wherein the first planar inductor is surface mounted to the one of the electrically and thermally conductive layers of the first multi-layer substrate.

6. The power converter of claim 1 wherein at lease a third one of the electrically and thermally conductive layers is patterned and electrically coupled to the second one of the electrically and thermally conductive layers to form the second winding.

7. A power converter, comprising:

a heat sink;

a first multi-layer substrate comprising at least two electrically and thermally conductive layers, and at least one electrically insulative and thermally conductive layer, each of the electrically and thermally conductive layers of the first multi-layer substrate electrically isolated from a next successive one of the electrically and thermally conductive layers by a respective one of the electrically insulative and thermally conductive layers;

at least a first power semiconductor device electrically coupled to a portion of an outer most one of the electrically and thermally conductive layers of the first multi-layer substrate, the first power semiconductor device electrically isolated from and thermally coupled to the heat sink via the first multi-layer substrate;

a magnetic core capable of producing a magnetic field; and

at least a second multi-layer substrate comprising at least two electrically and thermally conductive layers, and at least one electrically insulative and thermally conductive layer, each of the electrically and thermally conductive layers of the second multi-layer substrate electrically isolated from a next successive one of the electrically and thermally conductive layers by a respective one of the electrically insulative and thermally conductive layers, at least a first one of the electrically and thermally conductive layers patterned to form a first winding, at least a second one of the electrically and thermally conductive layers patterned to form a second winding, at least a portion of each of the first and the second windings disposed within the magnetic field of the magnetic core to form a planar transformer, the second multi-layer substrate thermally coupled to the heat sink.

8. The power converter of claim 7 wherein the number of electrically and thermally conductive layers in the first multi-layer substrate is an integer n, and the number of electrically insulative and thermally conductive layers is an integer equal to n−1.

9. The power converter of claim 7 wherein the first multi-layer substrate is thermally coupled directly to the heat sink via a solder.

10. The power converter of claim 7 wherein the first power semi-conductor device is directly surface mounted to an outer most one of the electrically and thermally conductive layers of the first multi-layer substrate via a solder.

11. The power converter of claim 7 wherein the first power semi-conductor device is a power switching transistor directly surface mounted to an outer most one of the electrically and thermally conductive layers of the first multi-layer substrate via a solder; and further comprising:

a second power semi-conductor device in the form of a diode, the diode directly surface mounted to the outer most one of the electrically and thermally conductive layers of the first multi-layer substrate via a solder in anti-parallel with the power switching transistor.

12. The power converter of claim 7 wherein the outer most one of the electrically and thermally conductive layers of the first multi-layer substrate comprises at least two distinct areas electrically isolated with respect to one another, the first power semiconductor device thermally coupled to a first one of the areas, and the power converter further comprising:

at least a second power semiconductor device thermally coupled to a second one of the areas.

13. The power converter of claim 7, further comprising:

at least a third multi-layer substrate electrically isolated with respect to the first multi-layer substrate, the third multi-layer substrate comprising at least two electrically and thermally conductive layers, and at least one electrically insulative and thermally conductive layer, each of the electrically and thermally conductive layers of the third multi-layer substrate isolated from a next successive one of the electrically and thermally conductive layers by a respective one of the electrically insulative and thermally conductive layers; and

at least a second power semiconductor device electrically coupled to a portion of an outer most one of the electrically and thermally conductive layers of the third multi-layer substrate, the second power semiconductor device electrically isolated from and thermally coupled to the heat sink via the third multi-layer substrate.

14. The power converter of claim 13 wherein the first and the second power semiconductor devices are electrically coupled as a leg of a bridge and operable as at least one of a rectifier or an inverter.

15. The power converter of claim 13, further comprising:

a third power semiconductor device, wherein the first power semiconductor device is electrically coupled to the third power semiconductor device as a leg of a rectifier; and

a fourth power semiconductor device, wherein the second power semiconductor device is electrically coupled to the fourth power semiconductor device as a leg of an inverter.

16. The power converter of claim 7 wherein the heat sink comprises an inlet, an outlet and at least one cavity in fluid communication with the inlet and the outlet for carrying a coolant fluid.

17. The power converter of claim 7, further comprising:

at least a first planar inductor electrically coupled to one of the electrically and thermally conductive layers of the first multi-layer substrate.

18. The power converter of claim 7, further comprising:

at least a third multi-layer substrate comprising at least three electrically and thermally conductive layers, and at least two electrically insulative and thermally conductive layers, each of the electrically and thermally conductive layers of the second multi-layer substrate electrically isolated from a next successive one of the electrically and thermally conductive layers by a respective one of the electrically insulative and thermally conductive layers, at least one of the electrically and thermally conductive layers patterned to form a first winding, at least two of the electrically and thermally conductive layers patterned and electrically coupled to one another to form a planar inductor, the third multi-layer substrate thermally coupled to the heat sink.

19. A power converter, comprising:

a heat sink;

a first multi-layer substrate, comprising at least a first layer, a second layer and a third layer, the first layer comprising an electrically and thermally conductive material patterned to form a first inductor, the second layer comprising an electrically insulative and thermally conductive material, and the third layer comprising an electrically and thermally conductive material, the second layer electrically isolating the third layer from the first layer, the third layer of the first multi-layer substrate thermally coupled to the heat sink;

at least a first power semiconductor device thermally coupled to a first portion of the first layer;

a magnetic core with a magnetic field; and

at least a second multi-layer substrate comprising at least a first layer, a second layer, and a third layer, the first layer comprising an electrically and thermally conductive material, the second layer comprising an electrically insulative and thermally conductive material, the third layer comprising an electrically and thermally conductive material, the second layer electrically isolating the third layer from the first layer, the third layer patterned to form a first winding, the first layer patterned to form a second winding, at least a portion of the first, the second, and the third conductive layers disposed within the magnetic field of the magnetic core to form a first planar transformer, an outer most one of the layers of electrically and thermally conductive material of the second multi-layer substrate thermally conductively coupled to the heat sink.

20. The power converter of claim 19 wherein the outer most one of the layers of the second multi-layer substrate is thermally conductively coupled to the heat sink via a solder.

21. The power converter of claim 19 wherein the first layer of the first multi-layer substrate comprises at least four areas electrically isolated with respect to one another, the

first power semiconductor device thermally coupled to a first one of the areas of the first layer of the first multi-layer substrate, and further comprising:

at least a second power semiconductor device thermally coupled to a second one of the areas of the first layer of the first multi-layer substrate;

at least a third power semiconductor device thermally coupled to a third one of the areas of the first layer of the first multi-layer substrate; and

at least a fourth power semiconductor device thermally coupled to a fourth one of the areas of the first layer of the first multi-layer substrate.

22. The power converter of claim 21, further comprising:

a number of wire bonds electrically coupling each of the first, the second, the third and the fourth power semiconductor devices to the second winding of the first planar transformer.

23. The power converter of claim 21 wherein the first, the second, the third, and the fourth power semiconductor devices are electrically coupled as a current doubler rectifier.

24. The power converter of claim 19, further comprising:

at least a third multi-layer substrate electrically isolated with respect to the first multi-layer substrate, the third multi-layer substrate comprising at least a first layer, a second layer and a third layer, the first layer comprising an electrically and thermally conductive material patterned to form a second inductor, the second layer comprising an electrically insulative and thermally conductive material, and the third layer comprising an electrically and thermally conductive material, the second layer electrically isolating the third layer from the first layer, the third layer of the third multi-layer substrate thermally coupled to the heat sink; and

at least a second power semiconductor device thermally coupled to a first portion of the first layer of the third multi-layered substrate.

25. The power converter of claim 24 wherein the first and second power semiconductor devices are electrically coupled to form a portion of a rectifier:

26. The power converter of claim 24 wherein the first and second power semiconductor devices are electrically coupled to form a portion of an inverter.

27. The power converter of claim 24, further comprising:

a number of wire bonds electrically coupling each of the first and the second power semi-conductor devices to at least one of the windings of the first planar transformer.

28. The power converter of claim 24, further comprising:

at least a fourth multi-layer substrate electrically isolated with respect to the first and the third multi-layer substrates, the fourth multi-layer substrate comprising at least a first layer, a second layer and a third layer, the first layer comprising an electrically and thermally conductive material patterned to form a third inductor, the second layer comprising an electrically insulative and thermally conductive material, and the third layer comprising an electrically and thermally conductive material, the second layer electrically isolating the third layer from the first layer, the third layer of the fourth multi-layer substrate thermally coupled to the heat sink;

at least a third power semiconductor device electrically and thermally coupled to a first portion of the first layer of the fourth multi-layered substrate;

at least a fifth multi-layer substrate electrically isolated with respect to the first, the third, and the fourth multi-layer substrates, the fifth multi-layer substrate comprising at least a first layer, a second layer and a third layer, the first layer comprising an electrically and thermally conductive material patterned to form a fourth inductor, the second layer comprising an electrically insulative and thermally conductive material, and the third layer comprising an electrically and thermally conductive material, the second layer electrically isolating the third layer from the first layer, the third layer of the fifth multi-layer substrate thermally coupled to the heat sink; and

at least a fourth power semiconductor device electrically and thermally coupled to a first portion of the first layer of the fifth multi-layered substrate, the first, the second, the third, and the fourth power semiconductor devices electrically coupled as a rectifier bridge.

29. The power converter of claim 28 wherein the rectifier bridge is a current doubler rectifier.

30. The power converter of claim 28, further comprising:

at least a sixth, a seventh, an eighth, a ninth, a tenth, and an eleventh multi-layer substrate, each of the sixth, the seventh, the eighth, the ninth, the tenth, and the eleventh multi-layer substrates electrically isolated with respect to the other multi-layer substrates, and each of the sixth, the seventh, the eighth, the ninth, the tenth, and the eleventh multi-layer substrates comprising at least a first layer, a second layer and a third layer, the first layer comprising an electrically and thermally conductive material patterned to form a respective inductor, the second layer comprising an electrically insulative and thermally conductive material, and the third layer comprising an electrically and thermally conductive material, the second layer electrically isolating the third layer from the first layer, the third layer of each the sixth, the seventh, the eighth, the ninth, the tenth, and the eleventh multi-layer substrates thermally coupled to the heat sink; and

at least a fifth, a sixth, a seventh, an eighth, a ninth, and a tenth power semiconductor device electrically and thermally coupled to a first portion of the first layer of the sixth, the seventh, the eighth, the ninth, the tenth, and the eleventh multi-layer substrates, respectively, the fifth, the sixth, the seventh, the eighth, the ninth, and the tenth power semiconductor devices electrically coupled to one another as an inverter.

31. The power converter of claim 26 wherein the first multi-layer substrate comprises a direct bonding copper substrate.

32. The power converter of claim 26 wherein the first multi-layer substrate comprises an insulated metal substrate.

33. The power converter of claim 26 wherein the heat sink comprises an inlet, an outlet, and at least one cavity in fluid communication with the inlet and the outlet for carrying a liquid coolant.

34. The power converter of claim 26 wherein the heat sink forms a recess size and dimensioned to receive a portion of

the magnetic core such that the first and the second windings are adjacent to a surface of the heat sink.

35. The power converter of claim 26, further comprising:

a pair of DC input terminals; and

a pair of DC output terminals.

36. The power converter of claim 26 wherein the first winding is electrically coupled to a power source as a primary winding.

37. The power converter of claim 26 wherein the first winding is electrically coupled to a load as a secondary winding.

38. The power converter of claim 19, further comprising:

at least a first planar inductor electrically coupled to one of the electrically and thermally conductive layers of the first multi-layer substrate.

39. The power converter of claim 19, further comprising:

at least a third multi-layer substrate comprising at least a first layer, a second layer, and a third layer, the first layer comprising an electrically and thermally conductive material, the second layer comprising an electrically insulative and thermally conductive material, the third layer comprising an electrically and thermally conductive material, the first layer patterned to form a second inductor, an outer most one of the electrically and thermally conductive layers thermally coupled to the heat sink.

40. The power converter of claim 19 wherein the second multi-layer substrate, further comprises:

a fourth layer and a fifth layer, the fourth layer comprising an electrically insulative and thermally conductive material, the fifth layer comprising an electrically and thermally conductive material, the fourth layer electrically isolating the third layer from the fifth layer, the fifth layer patterned and electrically coupled in series to the patterned first layer to form the second winding.

41. A power converter, comprising:

at least a first heat sink;

at least a first magnetic core capable of producing a magnetic field;

at least a first multi-layer substrate comprising at least two electrically and thermally conductive layers, and at least one electrically insulative and thermally conductive layer, each of the electrically and thermally conductive layers of the first multi-layer substrate electrically isolated from a next successive one of the electrically and thermally conductive layers by a respective one of the electrically insulative and thermally conductive layers, at least a first one of the electrically and thermally conductive layers patterned to form a first winding of at least a first planar transformer and a first winding of a first inductor, at least a second one of the electrically and thermally conductive layers patterned to form a second winding of the first planar transformer, at least a portion of each of the first and the second windings of the planar transformer disposed within the magnetic field of the magnetic core, the first multi-layer substrate thermally coupled to the heat sink; and

at least a first power semiconductor device electrically coupled to one of the electrically and thermally conductive layers of the first multi-layer substrate, the first power semiconductor device electrically isolated from and thermally coupled to the heat sink via the first multi-layer substrate.

42. The power converter of claim 41 wherein the first multi-layer substrate, further comprises:

a fourth layer and a fifth layer, the fourth layer comprising an electrically insulative and thermally conductive material, the fifth layer comprising an electrically and thermally conductive material, the fourth layer electrically isolating the fifth layer from the third layer, the fifth layer patterned and electrically coupled in series to the patterned first layer to form the first winding of the first planar transformer.

43. A method of forming a power converter, comprising:

providing a heat sink;

providing a number of multi-layer switch substrates, each of the multi-layer switch substrates comprising at least two electrically and thermally conductive layers, and at least one electrically insulative and thermally conductive layer, each of the electrically and thermally conductive layers of the multi-layer switch substrate isolated from a next successive one of the electrically and thermally conductive layers by a respective one of the electrically insulative and thermally conductive layers;

for each of the multi-layer switch substrates, soldering at least one respective power semiconductor device to one of the electrically and thermally conductive layers of the multi-layer switch substrate;

for each of the multi-layer switch substrates, soldering one of the electrically insulative and thermally conductive layers of the multi-layer switch substrate to the heat sink;

providing a magnetic core;

providing a multi-layer transformer substrate comprising at least two electrically and thermally conductive layers, and at least one electrically insulative and thermally conductive layers, each of the electrically and thermally conductive layers of the multi-layer transformer substrate isolated from a next successive one of the electrically and thermally conductive layers by a respective one of the electrically insulative and thermally conductive layers;

patterning at least one of the electrically and thermally conductive layers of the multi-layer transformer substrate to form a first winding;

patterning at least one of the electrically and thermally conductive layers of the multi-layer transformer substrate to form respective portions of a second winding;

disposing at least a portion of each of the first and the second windings within the magnetic field of the magnetic core to form a planar transformer; and

soldering at least one of the electrically insulative and thermally conductive layers of the multi-layer transformer substrate to the heat sink.

44. The method of claim 43 wherein soldering at least one of the electrically insulative and thermally conductive layers of the multi-layer switch substrate to the heat sink and soldering one of the electrically insulative and thermally

conductive layers of the multi-layer transformer substrate to the heat sink is performed at a same time.

45. The method of claim 43 wherein soldering at least one of the electrically insulative and thermally conductive layers of the multi-layer switch substrate to the heat sink and soldering one of the electrically insulative and thermally conductive layers of the multi-layer transformer substrate to the heat sink is performed in a single reflow process.

46. The method of claim 43 wherein soldering at least one respective power semiconductor device to one of the electrically and thermally conductive layers of the multi-layer switch substrate occurs before soldering at least one of the electrically insulative and thermally conductive layers of the multi-layer switch substrate to the heat sink.

47. The method of claim 43, further comprising:

wire bonding at least some of the power semiconductor devices to at least one of the first or the second windings.

48. The method of claim 43, further comprising:

wire bonding all of the power semiconductor devices to at least one of the first or the second windings.

49. The method of claim 43, further comprising:

wire bonding four of the power semiconductor devices to one another as a rectifier.

50. The method of claim 43, further comprising:

wire bonding six of the power semiconductor devices to one another as a three phase inverter.

* * * * *