US 20110193484A1

(19) United States

(12) Patent Application Publication

Harbers et al.

(10) Pub. No.: US 2011/0193484 A1

(43) Pub. Date: Aug. 11, 2011

(54) **FLEXIBLE ELECTRICAL CONNECTION OF AN LED-BASED ILLUMINATION DEVICE TO A LIGHT FIXTURE**

(75) Inventors: **Gerard Harbers**, Sunnyvale, CA (US); **Gregory W. Eng**, Fremont, CA (US); **Christopher R. Reed**, Campbell, CA (US); **Peter K. Tseng**, San Jose, CA (US); **John S. Yriberri**, Los Gatos, CA (US)

(73) Assignee: **XICATO, INC.**, San Jose, CA (US)

(21) Appl. No.: **13/089,316**

(22) Filed: **Apr. 19, 2011**

Related U.S. Application Data

(60) Provisional application No. 61/331,225, filed on May 4, 2010.

Publication Classification

(51) **Int. Cl.**
H01J 7/42 (2006.01)
F21V 33/00 (2006.01)

(52) **U.S. Cl.** **315/129**; 362/85

(57) **ABSTRACT**

An electrical interface module (EIM) is provided between an LED illumination device and a light fixture. The EIM includes an arrangement of contacts that are adapted to be coupled to an LED illumination device and a second arrangement of contacts that are adapted to be coupled to the light fixture and may include a power converter. Additionally, an LED selection module may be included to selectively turn on or off LEDs. A communication port may be included to transmit information associated with the LED illumination device, such as identification, indication of lifetime, flux, etc. The lifetime of the LED illumination device may be measured and communicated, e.g., by an RF signal, IR signal, wired signal or by controlling the light output of the LED illumination device. An optic that is replaceably mounted to the LED illumination device may include, e.g., a flux sensor that is connected to the electrical interface.

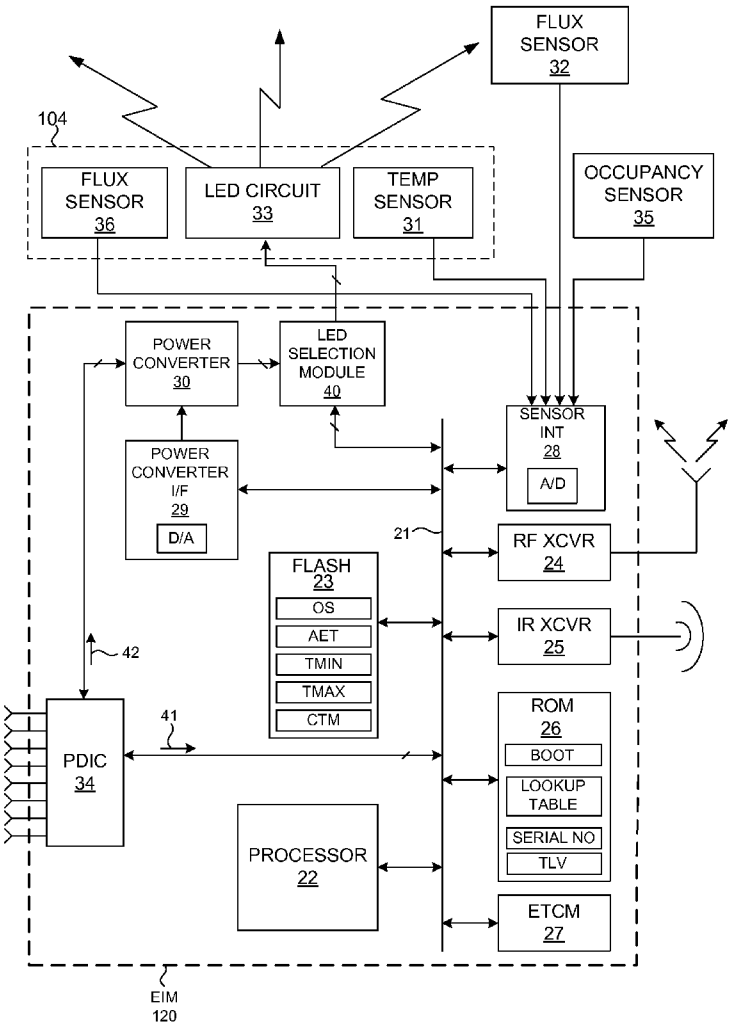

SAMSUNG EXHIBIT 1054

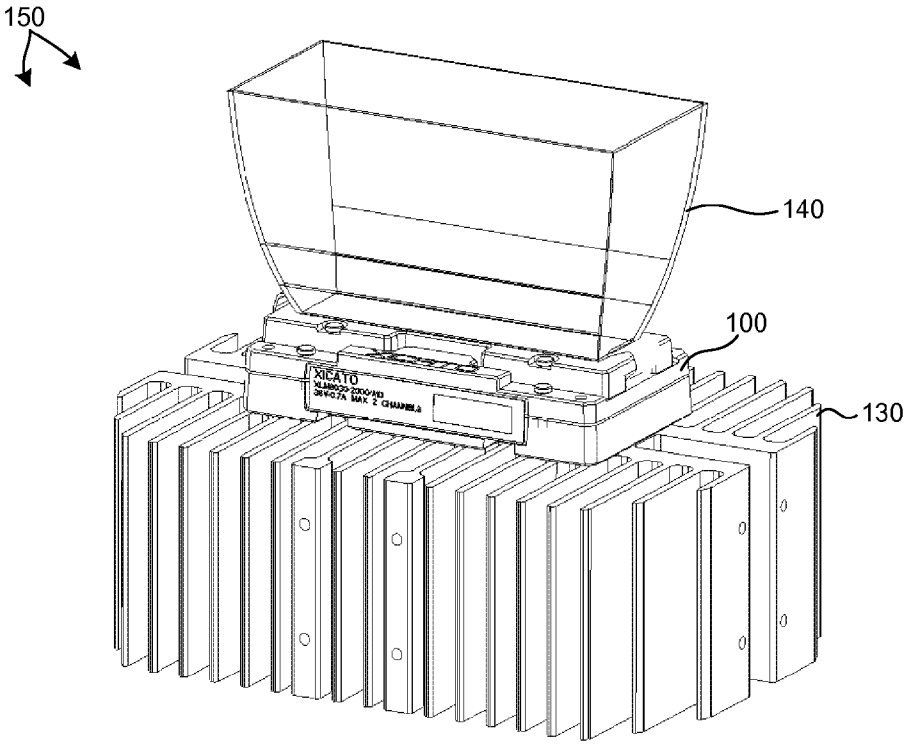

FIG. 1

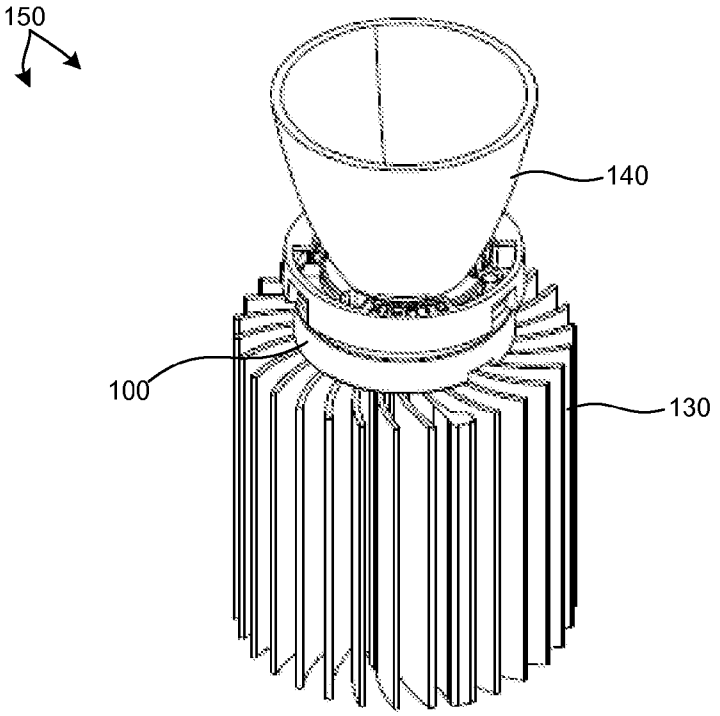

FIG. 2

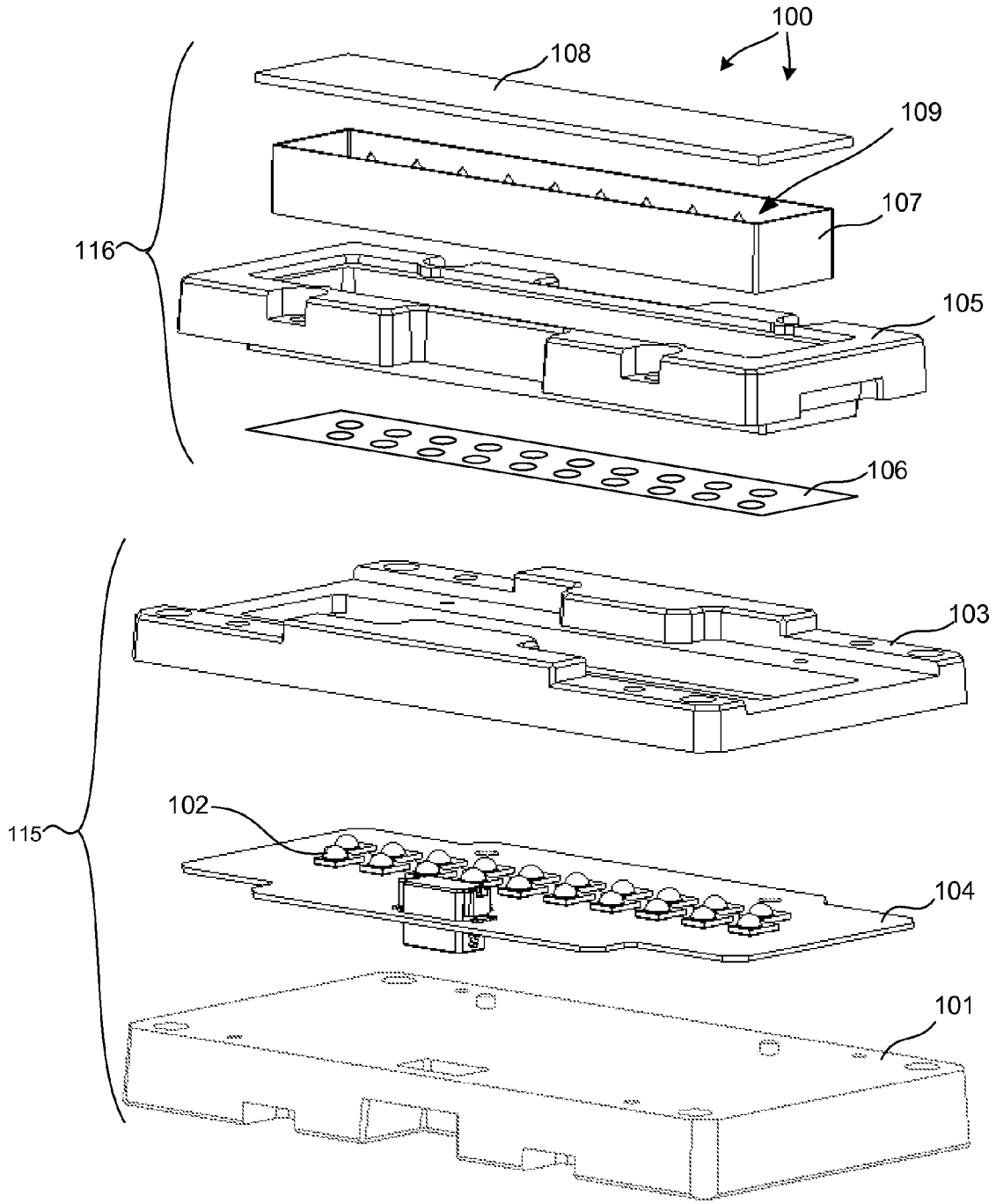

FIG. 3A

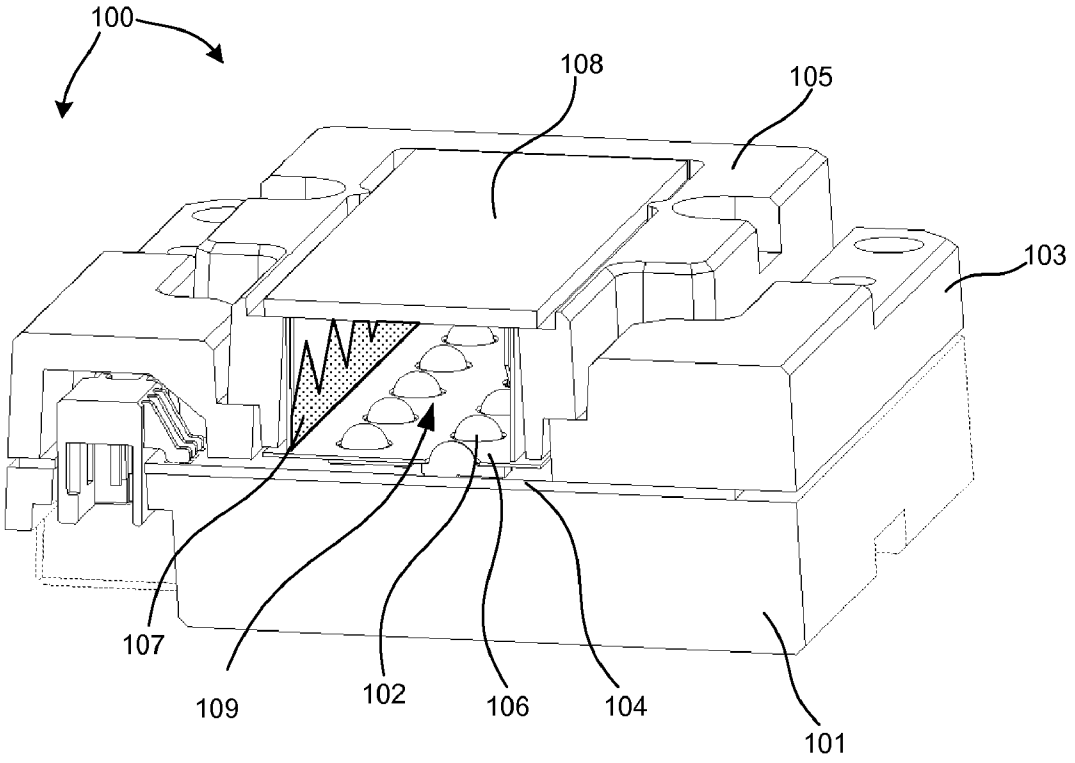

FIG. 3B

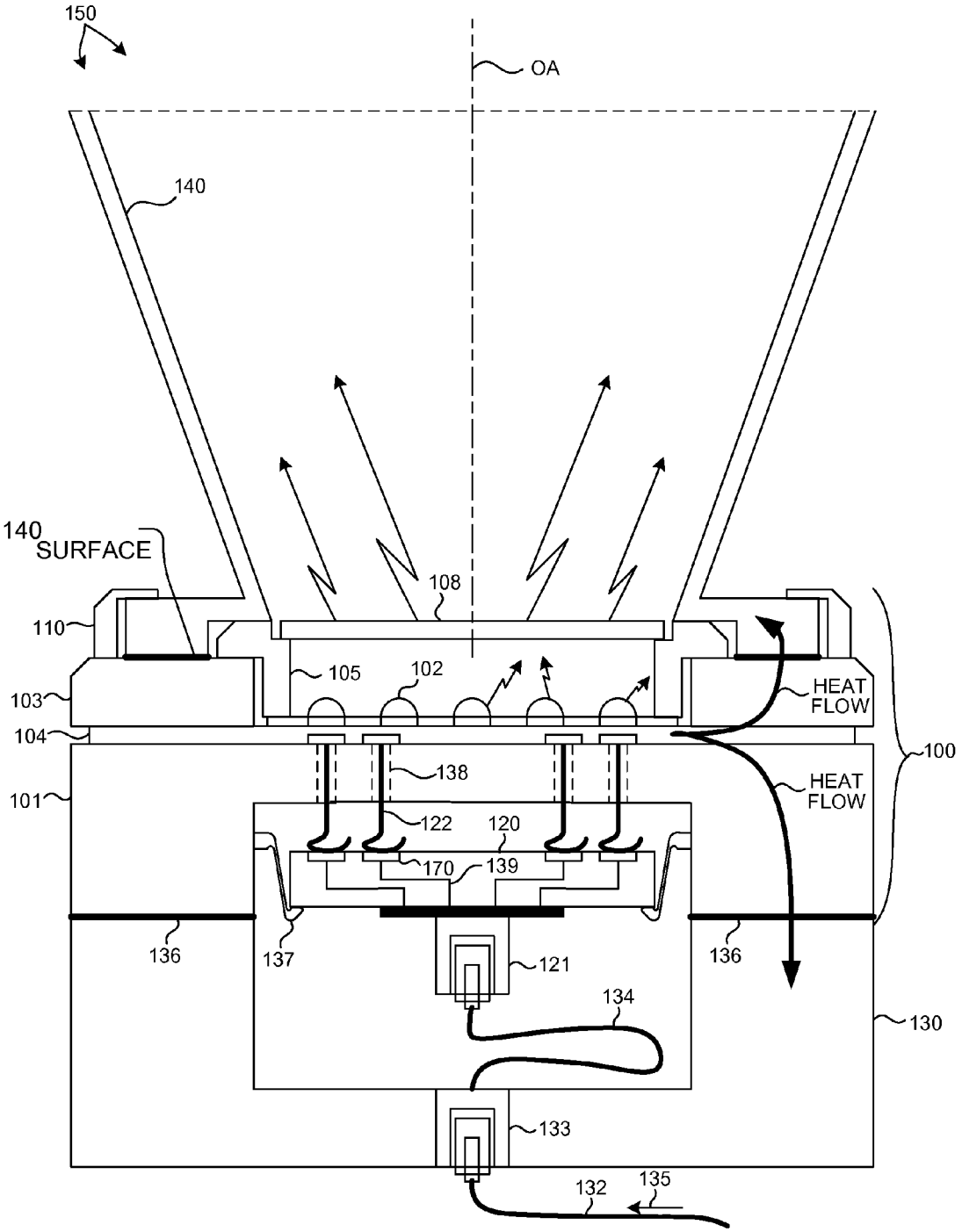
150
OA
140
140
SURFACE
108
110
105
102
103
HEAT
FLOW
104
100
138
101
HEAT
FLOW
122
120
170
139
136
137
121
136
134
130
133
132
135

FIG. 4

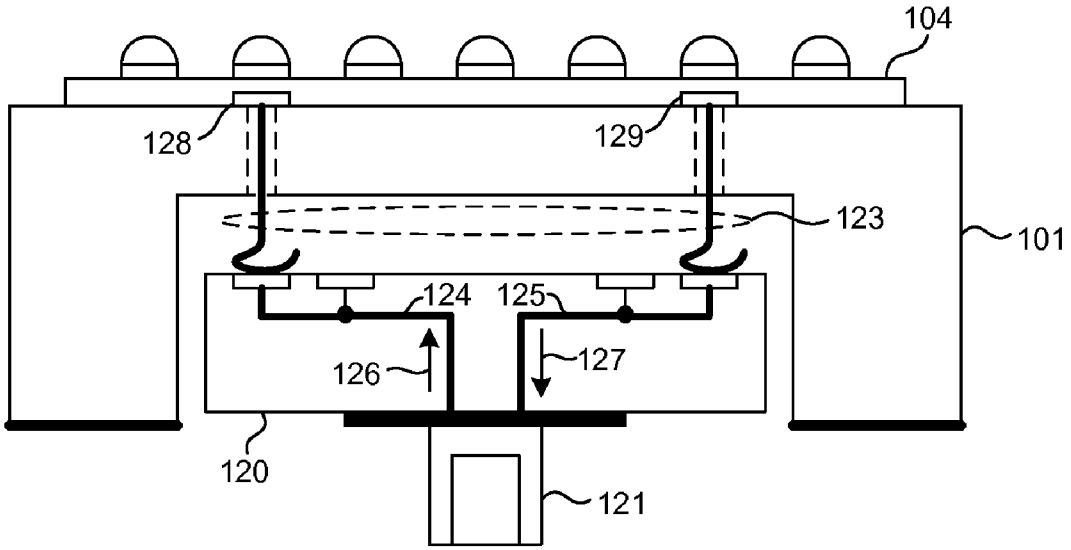
104
128
129
123
101
124
125
126
127
120
121

FIG. 5A

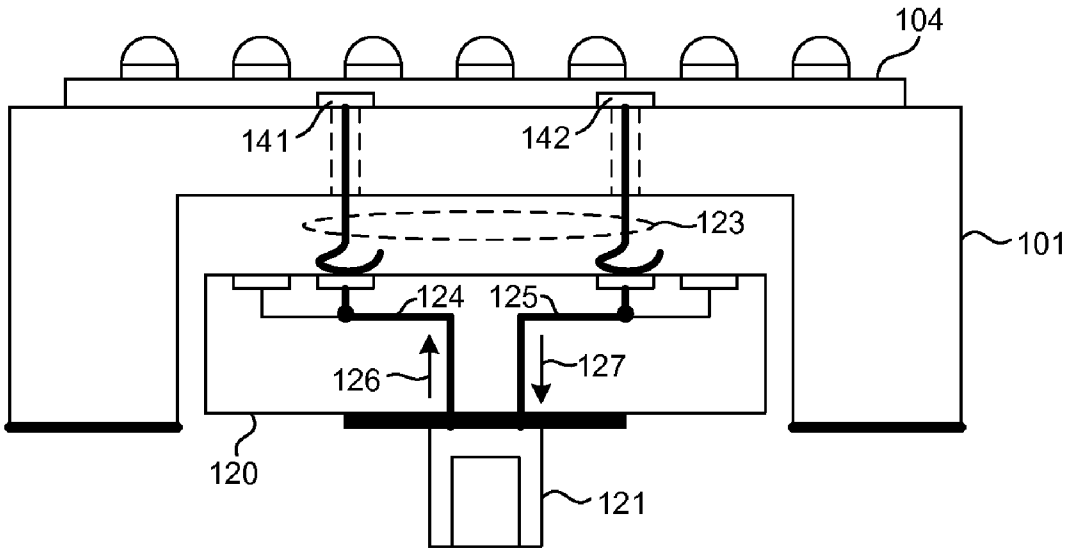
104
141
142
123
101
124
125
126
127
120
121

FIG. 5B

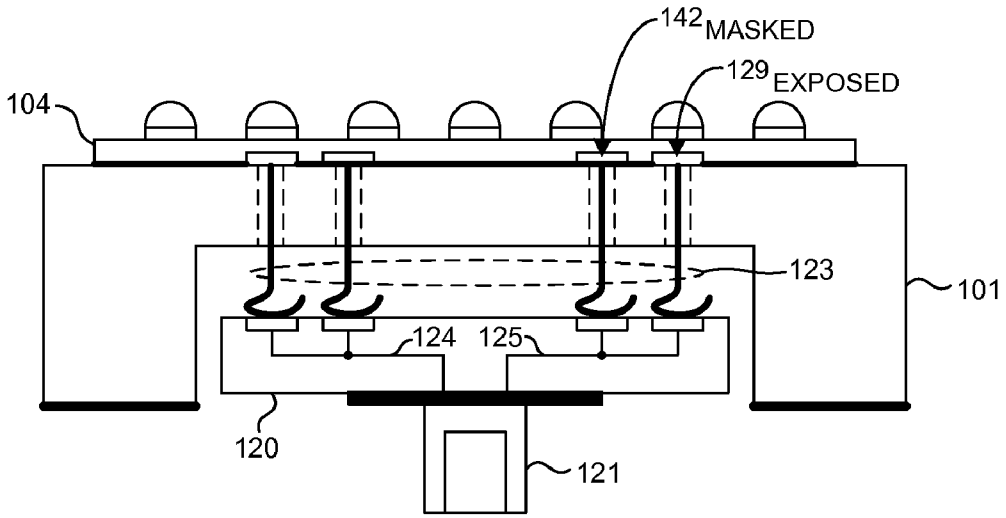
142 MASKED
129 EXPOSED
104
123
101
124
125
120
121

FIG. 6A

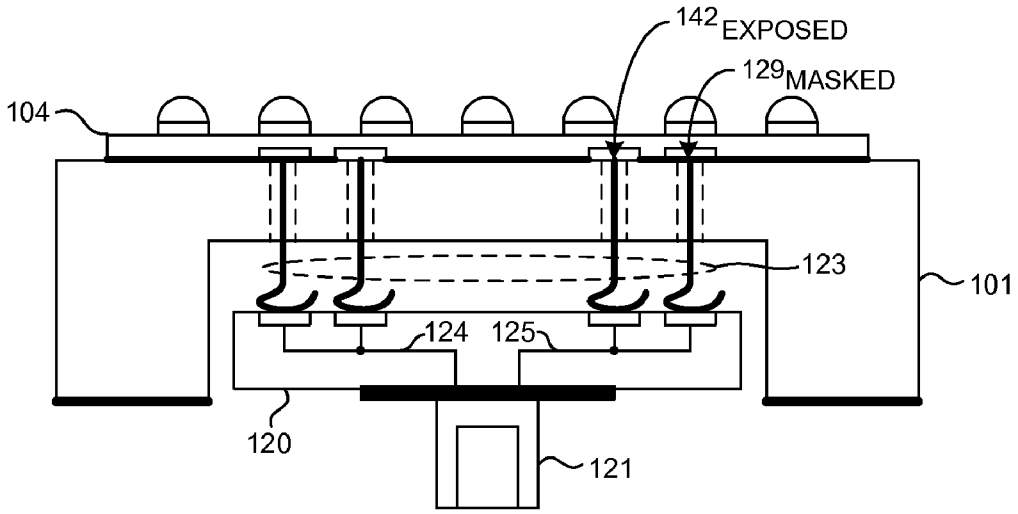
142 EXPOSED
129 MASKED
104
123
101
124
125
120
121

FIG. 6B

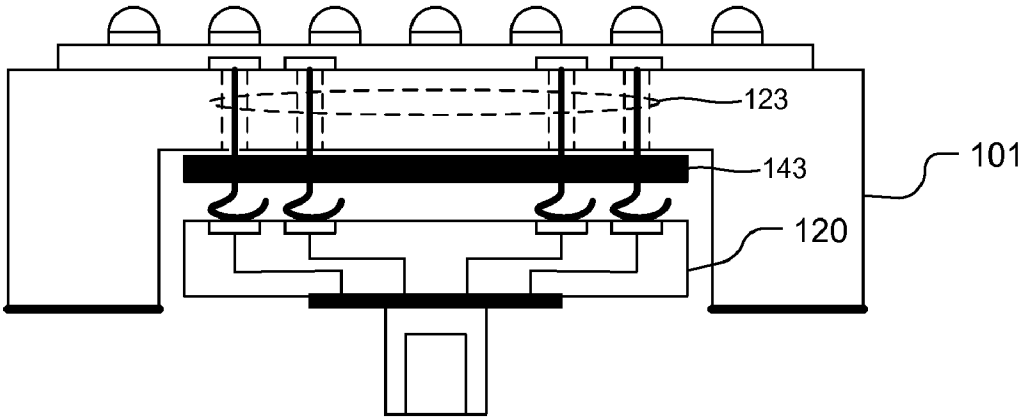

FIG. 7

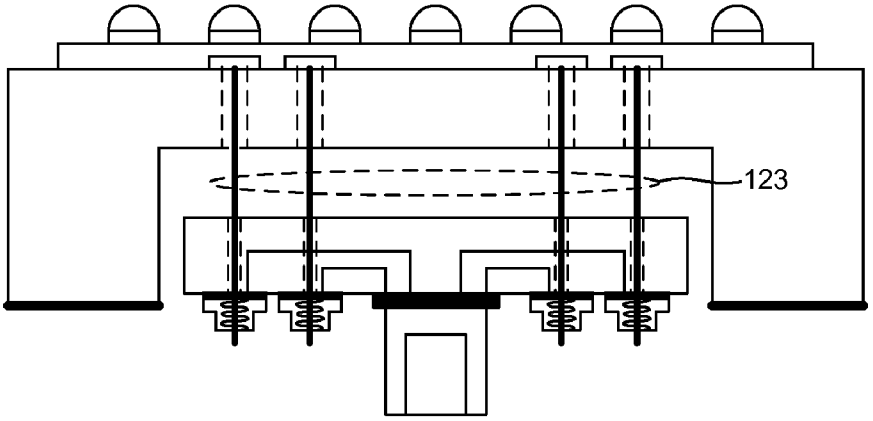

FIG. 8

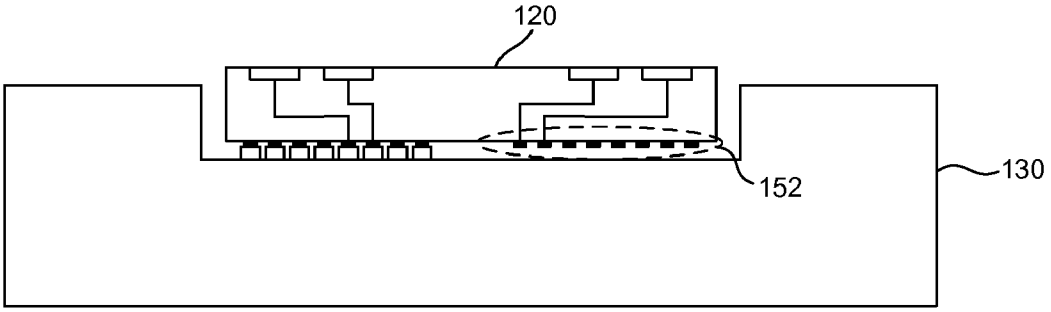

FIG. 9A

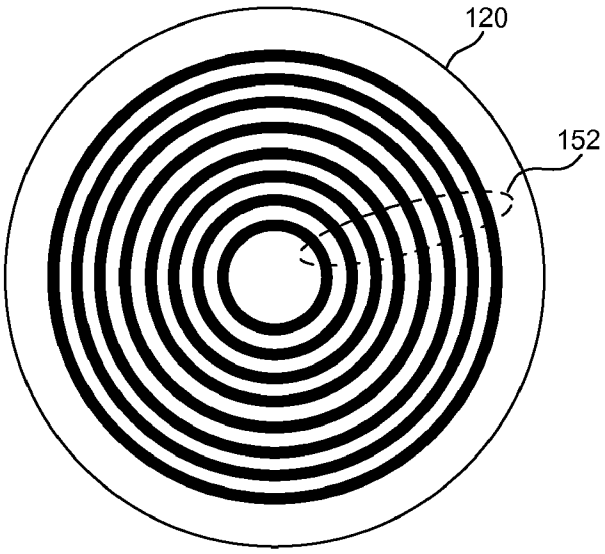

FIG. 9B

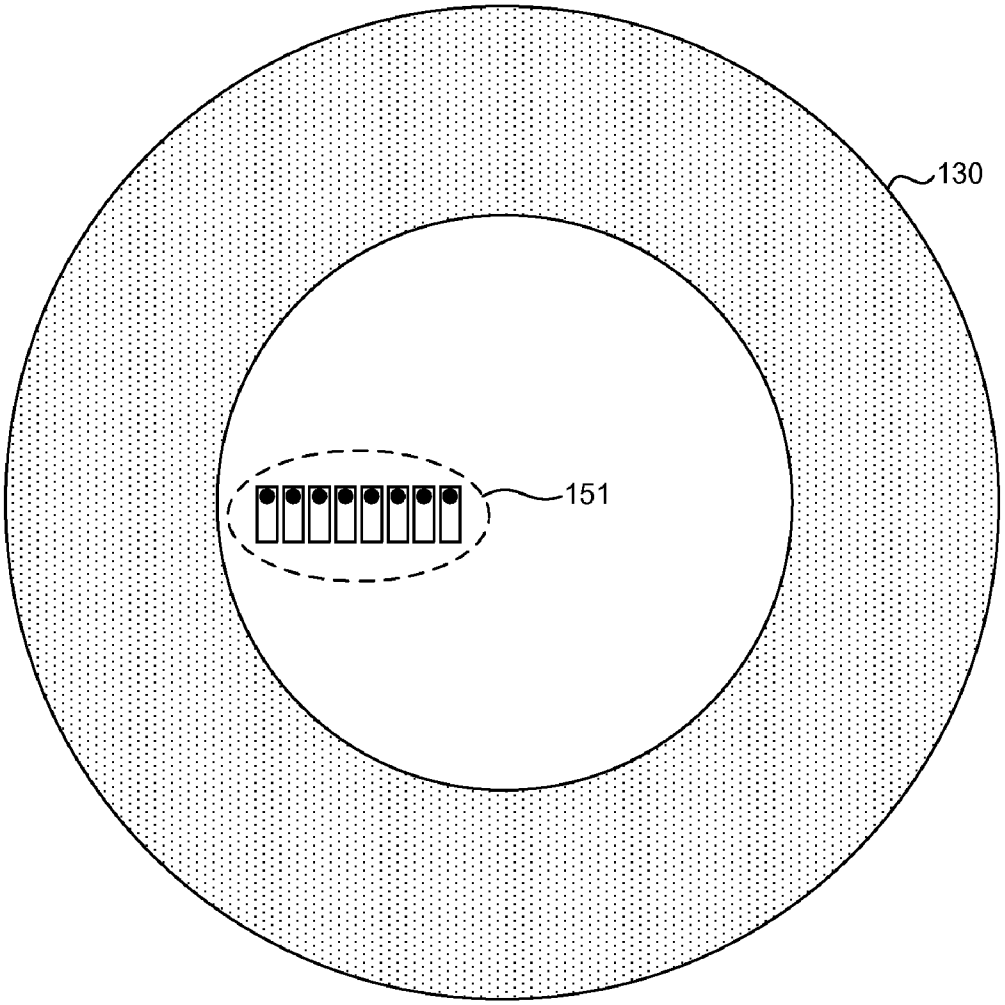

FIG. 9C

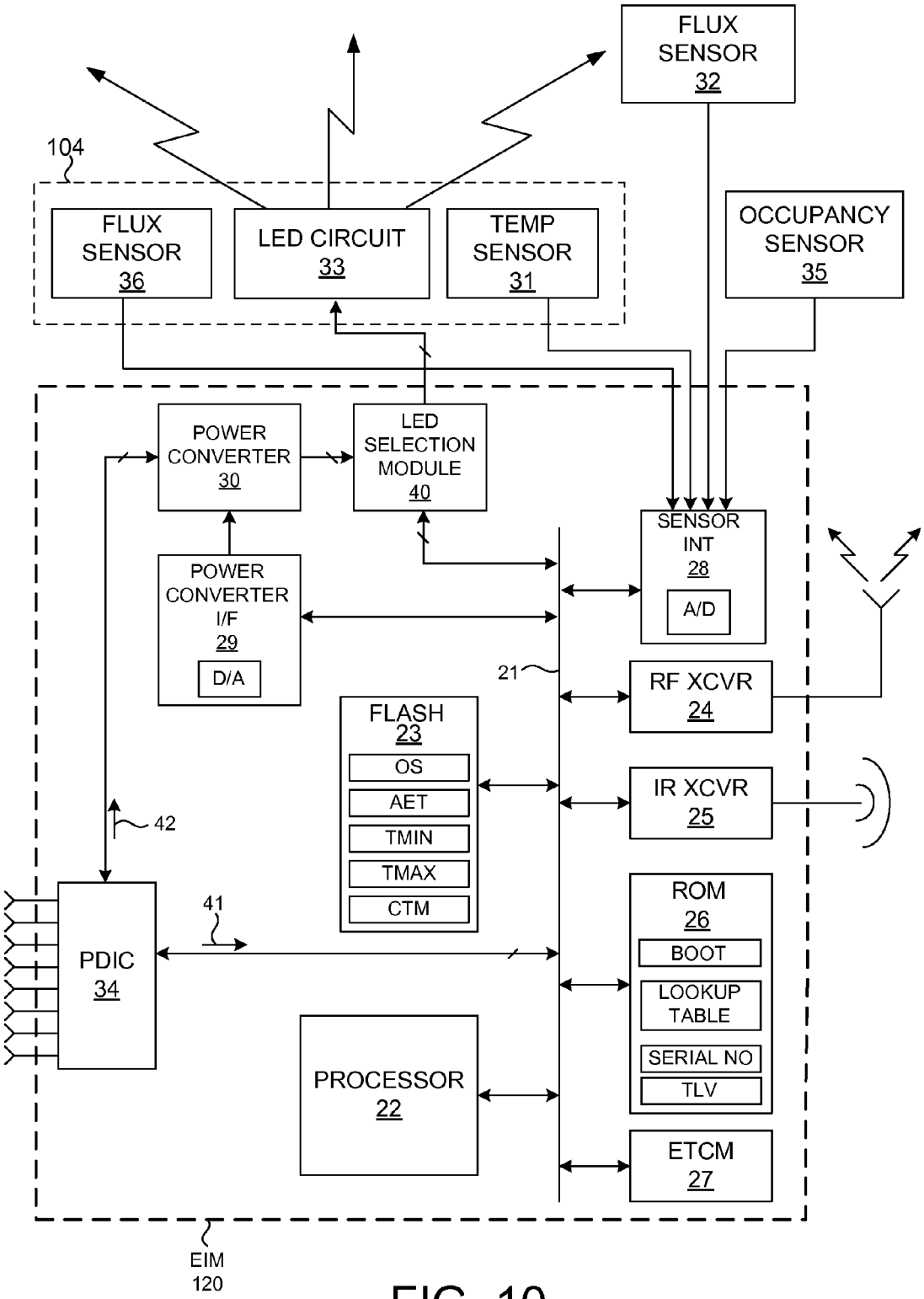
FLUX SENSOR 32
104
FLUX SENSOR 36
LED CIRCUIT 33
TEMP SENSOR 31
OCCUPANCY SENSOR 35
POWER CONVERTER 30
LED SELECTION MODULE 40
SENSOR INT 28
A/D
POWER CONVERTER I/F 29
D/A
21
RF XCVR 24
FLASH 23
OS
AET
TMIN
TMAX
CTM
IR XCVR 25
42
41
PDIC 34
ROM 26
BOOT
LOOKUP TABLE
SERIAL NO
TLV
PROCESSOR 22
ETCM 27
EIM 120

FIG. 10

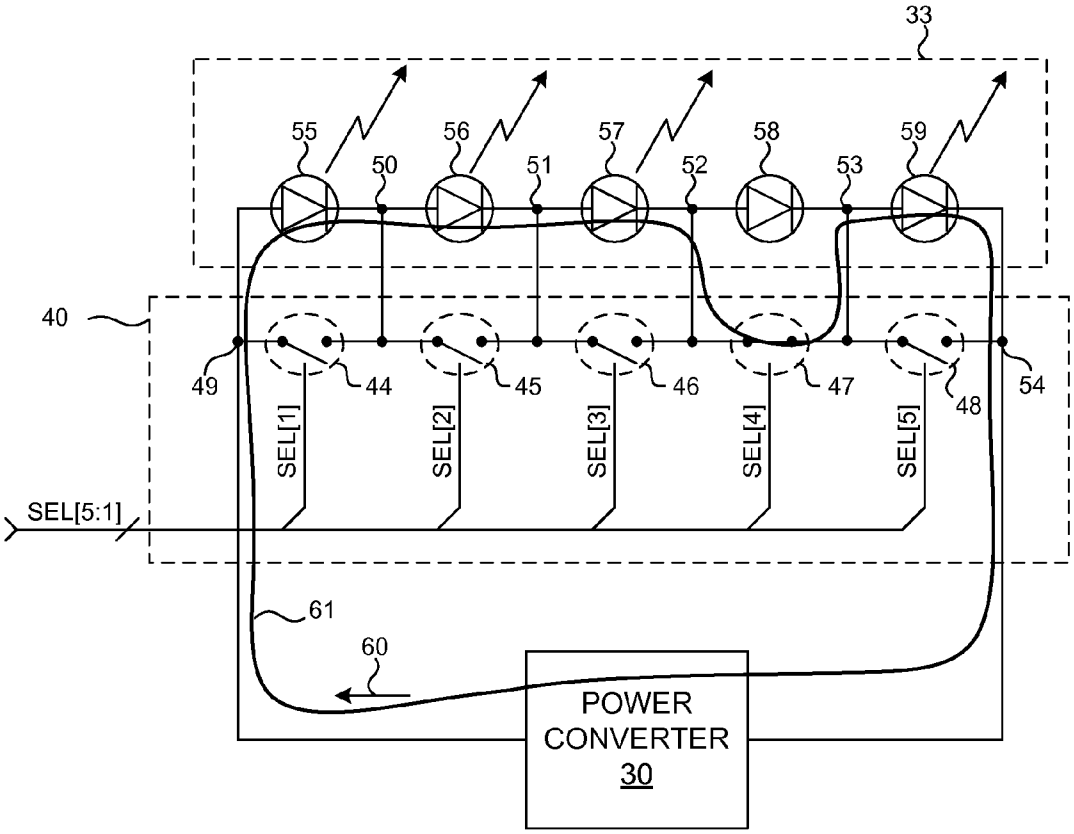
33
55
56
57
58
59
50
51
52
53
40
49
44
45
46
47
48
54
SEL[1]
SEL[2]
SEL[3]
SEL[4]
SEL[5]
SEL[5:1]
61
60
POWER
CONVERTER
30

FIG. 11

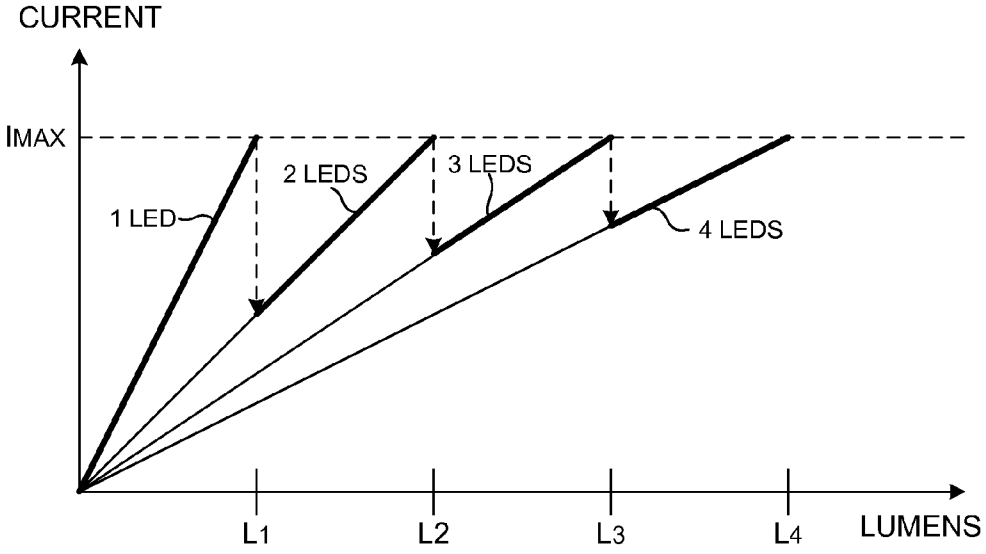
CURRENT
IMAX
1 LED
2 LEDS
3 LEDS
4 LEDS
L1
L2
L3
L4
LUMENS

FIG. 12

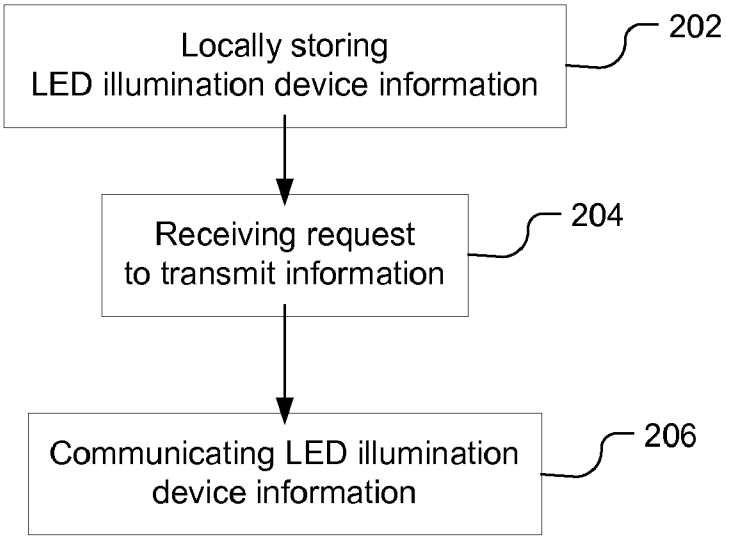
Locally storing
LED illumination device information
202
Receiving request
to transmit information
204
Communicating LED illumination
device information
206

FIG. 13

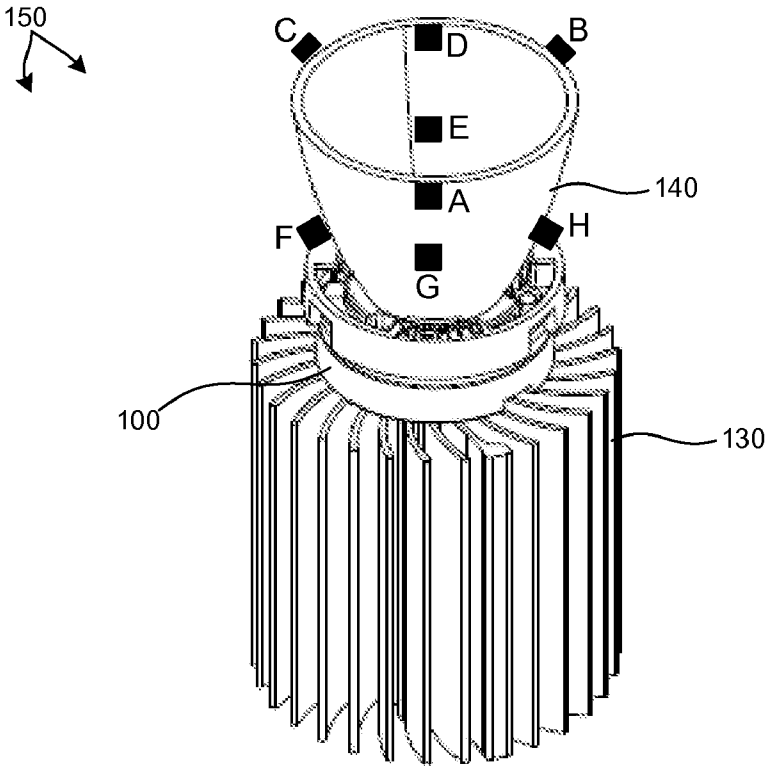
150
C
B
D
E
A
140
F
H
G
100
130

FIG. 15

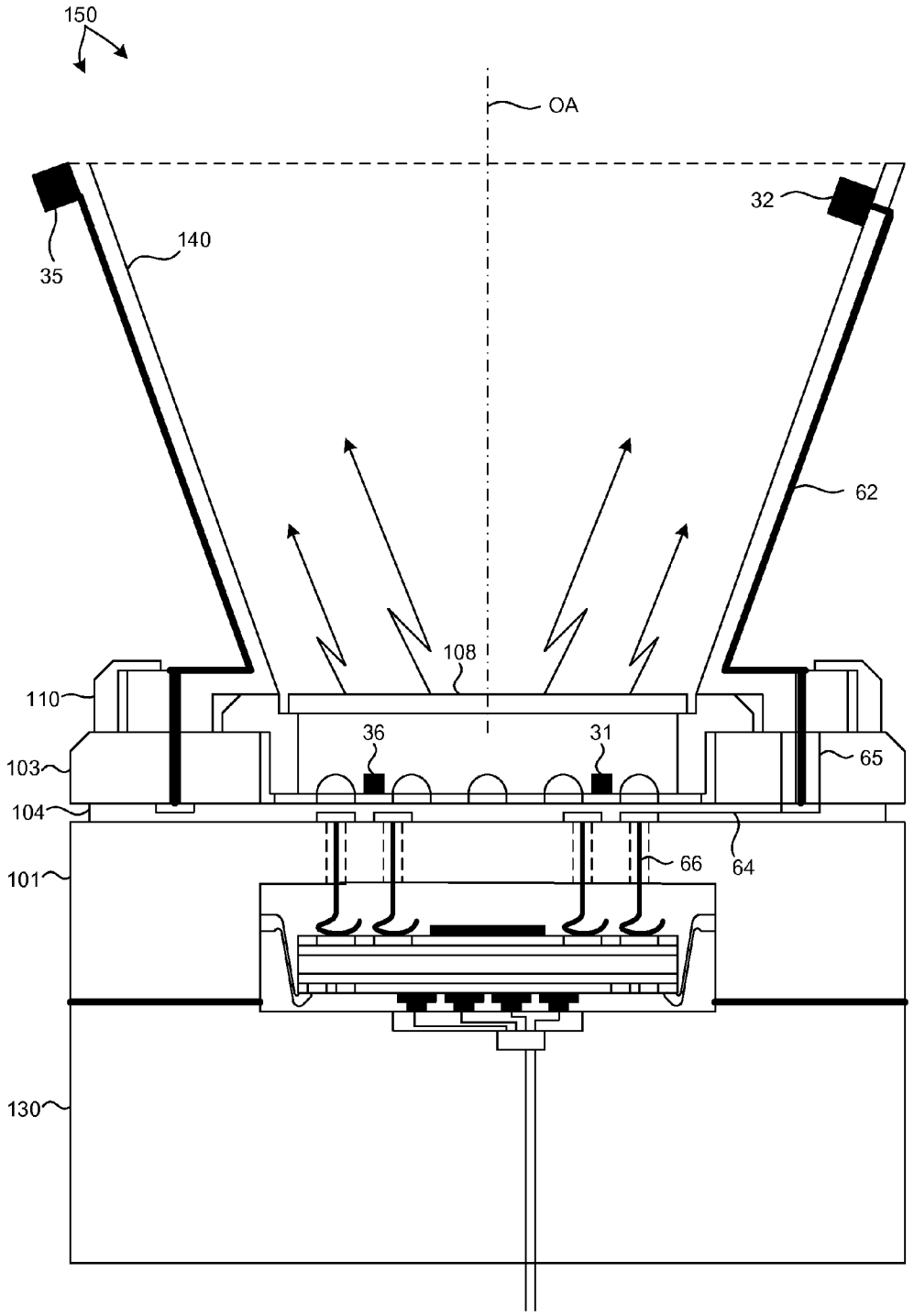

FIG. 14

FLEXIBLE ELECTRICAL CONNECTION OF AN LED-BASED ILLUMINATION DEVICE TO A LIGHT FIXTURE

CROSS REFERENCE TO RELATED APPLICATIONS

[0001] This application claims the benefit of Provisional Application No. 61/331,225, filed May 4, 2010, which is incorporated by reference herein in its entirety.

TECHNICAL FIELD

[0002] The described embodiments relate to illumination devices that include Light Emitting Diodes (LEDs).

BACKGROUND INFORMATION

[0003] The use of LEDs in general lighting is becoming more desirable and more prevalent. Illumination devices that include LEDs typically require large amounts of heat sinking and specific power requirements. Consequently, many such illumination devices must be mounted to light fixtures that include heat sinks and provide the necessary power. The typically electrical connection of such an LED illumination device to a light fixture, unfortunately, is not user friendly. Consequently, improvements are desired.

SUMMARY

[0004] In accordance with one embodiment, an electrical interface module is provided between an LED illumination device and a light fixture. The electrical interface module includes an arrangement of electrical contact surfaces that are adapted to be coupled to an LED illumination device and a second arrangement of electrical contact surfaces that are adapted to be coupled to the light fixture. The electrical contact surfaces may be adapted to be electrically coupleable to different configurations of contact surfaces on different LED illumination devices. The electrical interface module may include a power converter that is coupled to the LED illumination device through the electrical contact surfaces. Additionally, an LED selection module that uses switching elements to selectively turn on or off LEDs in the LED illumination device. A communication port that is controlled by a processor may be included to transmit information associated with the LED illumination device, such as identification, indication of lifetime, flux, etc. The lifetime of the LED illumination device may be measured by accumulating the number of cycles generated by an electronic circuit and communicated, e.g., by an RF signal, IR signal, wired signal or by controlling the light output of the LED illumination device. Additionally, an optic that is replaceably mounted to the LED illumination device may include, e.g., a flux sensor that is connected to the electrical interface.

BRIEF DESCRIPTION OF THE DRAWINGS

[0005] FIGS. **1-2** illustrate two exemplary luminaires, including an illumination device, reflector, and light fixture.

[0006] FIG. **3**A shows an exploded view illustrating components of LED based illumination device as depicted in FIG. **1**.

[0007] FIG. **3**B illustrates a perspective, cross-sectional view of LED based illumination device as depicted in FIG. **1**.

[0008] FIG. **4** illustrates a cut-away view of luminaire as depicted in FIG. **2**, with an electrical interface module coupled between the LED illumination device and the light fixture.

[0009] FIGS. **5**A-**5**B illustrate two different configurations of the electrical interface module.

[0010] FIGS. **6**A-**6**B illustrate selectively masking and exposing terminal locations on the electrical interface module.

[0011] FIG. **7** illustrates a lead frame that may be used to position a plurality of spring pins for contact with the electrical interface module.

[0012] FIG. **8** illustrates an embodiment of the spring pins that may be used to contact the electrical interface module.

[0013] FIGS. **9**A-**9**C illustrate a plurality of radially spaced electrical contacts that may be used with the electrical interface module.

[0014] FIG. **10** is a schematic diagram illustrative of the electrical interface module in greater detail.

[0015] FIG. **11** is a schematic illustrative of an LED selection module.

[0016] FIG. **12** is a graph illustrative of selecting LEDs to change the amount of flux emitted by powered LEDs.

[0017] FIG. **13** is a flow chart illustrating a process of externally communicating LED illumination device information.

[0018] FIG. **14** illustrates an optic in the form of a reflector that includes at least one sensor that is in electrical contact with the electrical interface module.

[0019] FIG. **15** is illustrative of locations on the reflector sensors may be positioned.

DETAILED DESCRIPTION

[0020] Reference will now be made in detail to background examples and some embodiments of the invention, examples of which are illustrated in the accompanying drawings.

[0021] FIGS. **1-2** illustrate two exemplary luminaires. The luminaire illustrated in FIG. **1** includes an illumination device **100** with a rectangular form factor. The luminaire illustrated in FIG. **2** includes an illumination device **100** with a circular form factor. These examples are for illustrative purposes. Examples of illumination devices of general polygonal and elliptical shapes may also be contemplated. Luminaire **150** includes illumination device **100**, reflector **140**, and light fixture **130**. As depicted, light fixture **130** is a heat sink, and thus, may sometimes be referred as heat sink **130**. However, light fixture **130** may include other structural and decorative elements (not shown). Reflector **140** is mounted to illumination device **100** to collimate or deflect light emitted from illumination device **100**. The reflector **140** may be made from a thermally conductive material, such as a material that includes aluminum or copper and may be thermally coupled to illumination device **100**. Heat flows by conduction through illumination device **100** and the thermally conductive reflector **140**. Heat also flows via thermal convection over the reflector **140**. Reflector **140** may be a compound parabolic concentrator, where the concentrator is constructed of or coated with a highly reflecting material. Compound parabolic concentrators tend to be tall, but they often are used in a reduced length form, which increases the beam angle. An advantage of this configuration is that no additional diffusers are required to homogenize the light, which increases the throughput efficiency. Optical elements, such as a diffuser or reflector **140** may be removably coupled to illumination

device **100**, e.g., by means of threads, a clamp, a twist-lock mechanism, or other appropriate arrangement.

[0022] Illumination device **100** is mounted to light fixture **130**. As depicted in FIGS. **1** and **2**, illumination device **100** is mounted to heat sink **130**. Heat sink **130** may be made from a thermally conductive material, such as a material that includes aluminum or copper and may be thermally coupled to illumination device **100**. Heat flows by conduction through illumination device **100** and the thermally conductive heat sink **130**. Heat also flows via thermal convection over heat sink **130**. Illumination device **100** may be attached to heat sink **130** by way of screw threads to clamp the illumination device **100** to the heat sink **130**. To facilitate easy removal and replacement of illumination device **100**, illumination device **100** may be removably coupled to heat sink **130**, e.g., by means of a clamp mechanism, a twist-lock mechanism, or other appropriate arrangement. Illumination device **100** includes at least one thermally conductive surface that is thermally coupled to heat sink **130**, e.g., directly or using thermal grease, thermal tape, thermal pads, or thermal epoxy. For adequate cooling of the LEDs, a thermal contact area of at least 50 square millimeters, but preferably 100 square millimeters should be used per one watt of electrical energy flow into the LEDs on the board. For example, in the case when 20 LEDs are used, a 1000 to 2000 square millimeter heatsink contact area should be used. Using a larger heat sink **130** may permit the LEDs **102** to be driven at higher power, and also allows for different heat sink designs. For example, some designs may exhibit a cooling capacity that is less dependent on the orientation of the heat sink. In addition, fans or other solutions for forced cooling may be used to remove the heat from the device. The bottom heat sink may include an aperture so that electrical connections can be made to the illumination device **100**.

[0023] FIG. **3**A shows an exploded view illustrating components of LED illumination device **100** as depicted in FIG. **1**. It should be understood that as defined herein an LED illumination device is not an LED, but is an LED light source or fixture or component part of an LED light source or fixture. LED illumination device **100** includes one or more LED die or packaged LEDs and a mounting board to which LED die or packaged LEDs are attached. FIG. **3**B illustrates a perspective, cross-sectional view of LED illumination device **100** as depicted in FIG. **1**. LED illumination device **100** includes one or more solid state light emitting elements, such as light emitting diodes (LEDs) **102**, mounted on mounting board **104**. Mounting board **104** is attached to mounting base **101** and secured in position by mounting board retaining ring **103**. Together, mounting board **104** populated by LEDs **102** and mounting board retaining ring **103** comprise light source sub-assembly **115**. Light source sub-assembly **115** is operable to convert electrical energy into light using LEDs **102**. The light emitted from light source sub-assembly **115** is directed to light conversion sub-assembly **116** for color mixing and color conversion. Light conversion sub-assembly **116** includes cavity body **105** and output window **108**, and optionally includes either or both bottom reflector insert **106** and sidewall insert **107**. Output window **108** is fixed to the top of cavity body **105**. Cavity body **105** includes interior sidewalls such that the interior sidewalls direct light from the LEDs **102** to the output window **108** when cavity body **105** is mounted over light source sub-assembly **115**. Bottom reflector insert **106** may optionally be placed over mounting board **104**. Bottom reflector insert **106** includes holes such that the light emitting portion of each LED **102** is not blocked by bottom reflector insert **106**. Sidewall insert **107** may optionally be placed inside cavity body **105** such that the interior surfaces of sidewall insert **107** direct light from the LEDs **102** to the output window when cavity body **105** is mounted over light source sub-assembly **115**. Although as depicted, the interior sidewalls of cavity body **105** are rectangular in shape as viewed from the top of illumination device **100**, other shapes may be contemplated (e.g. clover shaped or polygonal). In addition, the interior sidewalls of cavity body **105** may taper outward from mounting board **104** to output window **108**, rather than perpendicular to output window **108** as depicted.

[0024] In this embodiment, the sidewall insert **107**, output window **108**, and bottom reflector insert **106** disposed on mounting board **104** define a light mixing cavity **109** in the LED illumination device **100** in which a portion of light from the LEDs **102** is reflected until it exits through output window **108**. Reflecting the light within the cavity **109** prior to exiting the output window **108** has the effect of mixing the light and providing a more uniform distribution of the light that is emitted from the LED illumination device **100**. Portions of sidewall insert **107** may be coated with a wavelength converting material. Furthermore, portions of output window **108** may be coated with the same or a different wavelength converting material. In addition, portions of bottom reflector insert **106** may be coated with the same or a different wavelength converting material. The photo converting properties of these materials in combination with the mixing of light within cavity **109** results in a color converted light output by output window **108**. By tuning the chemical properties of the wavelength converting materials and the geometric properties of the coatings on the interior surfaces of cavity **109**, specific color properties of light output by output window **108** may be specified, e.g. color point, color temperature, and color rendering index (CRI).

[0025] For purposes of this patent document, a wavelength converting material is any single chemical compound or mixture of different chemical compounds that performs a color conversion function, e.g. absorbs light of one peak wavelength and emits light at another peak wavelength.

[0026] Cavity **109** may be filled with a non-solid material, such as air or an inert gas, so that the LEDs **102** emit light into the non-solid material. By way of example, the cavity may be hermetically sealed and Argon gas used to fill the cavity. Alternatively, Nitrogen may be used. In other embodiments, cavity **109** may be filled with a solid encapsulent material. By way of example, silicone may be used to fill the cavity.

[0027] The LEDs **102** can emit different or the same colors, either by direct emission or by phosphor conversion, e.g., where phosphor layers are applied to the LEDs as part of the LED package. Thus, the illumination device **100** may use any combination of colored LEDs **102**, such as red, green, blue, amber, or cyan, or the LEDs **102** may all produce the same color light or may all produce white light. For example, the LEDs **102** may all emit either blue or UV light. When used in combination with phosphors (or other wavelength conversion means), which may be, e.g., in or on the output window **108**, applied to the sidewalls of cavity body **105**, or applied to other components placed inside the cavity (not shown), such that the output light of the illumination device **100** has the color as desired.

[0028] The mounting board **104** provides electrical connections to the attached LEDs **102** to a power supply (not shown). In one embodiment, the LEDs **102** are packaged LEDs, such

as the Luxeon Rebel manufactured by Philips Lumileds Lighting. Other types of packaged LEDs may also be used, such as those manufactured by OSRAM (Ostar package), Luminus Devices (USA), Cree (USA), Nichia (Japan), or Tridonic (Austria). As defined herein, a packaged LED is an assembly of one or more LED die that contains electrical connections, such as wire bond connections or stud bumps, and possibly includes an optical element and thermal, mechanical, and electrical interfaces. The LEDs **102** may include a lens over the LED chips. Alternatively, LEDs without a lens may be used. LEDs without lenses may include protective layers, which may include phosphors. The phosphors can be applied as a dispersion in a binder, or applied as a separate plate. Each LED **102** includes at least one LED chip or die, which may be mounted on a submount. The LED chip typically has a size about 1 mm by 1 mm by 0.5 mm, but these dimensions may vary. In some embodiments, the LEDs **102** may include multiple chips. The multiple chips can emit light similar or different colors, e.g., red, green, and blue. The LEDs **102** may emit polarized light or non-polarized light and LED based illumination device **100** may use any combination of polarized or non-polarized LEDs. In some embodiments, LEDs **102** emit either blue or UV light because of the efficiency of LEDs emitting in these wavelength ranges. In addition, different phosphor layers may be applied on different chips on the same submount. The submount may be ceramic or other appropriate material. The submount typically includes electrical contact pads on a bottom surface that are coupled to contacts on the mounting board **104**. Alternatively, electrical bond wires may be used to electrically connect the chips to a mounting board. Along with electrical contact pads, the LEDs **102** may include thermal contact areas on the bottom surface of the submount through which heat generated by the LED chips can be extracted. The thermal contact areas are coupled to heat spreading layers on the mounting board **104**. Heat spreading layers may be disposed on any of the top, bottom, or intermediate layers of mounting board **104**. Heat spreading layers may be connected by vias that connect any of the top, bottom, and intermediate heat spreading layers.

[0029] In some embodiments, the mounting board **104** conducts heat generated by the LEDs **102** to the sides of the board **104** and the bottom of the board **104**. In one example, the bottom of mounting board **104** may be thermally coupled to a heat sink **130** (shown in FIGS. **1** and **2**) via mounting base **101**. In other examples, mounting board **104** may be directly coupled to a heat sink, or a lighting fixture and/or other mechanisms to dissipate the heat, such as a fan. In some embodiments, the mounting board **104** conducts heat to a heat sink thermally coupled to the top of the board **104**. For example, mounting board retaining ring **103** and cavity body **105** may conduct heat away from the top surface of mounting board **104**. Mounting board **104** may be an FR4 board, e.g., that is 0.5 mm thick, with relatively thick copper layers, e.g., 30 μm to 100 μm, on the top and bottom surfaces that serve as thermal contact areas. In other examples, the board **104** may be a metal core printed circuit board (PCB) or a ceramic submount with appropriate electrical connections. Other types of boards may be used, such as those made of alumina (aluminum oxide in ceramic form), or aluminum nitride (also in ceramic form).

[0030] Mounting board **104** includes electrical pads to which the electrical pads on the LEDs **102** are connected. The electrical pads are electrically connected by a metal, e.g., copper, trace to a contact, to which a wire, bridge or other external electrical source is connected. In some embodiments, the electrical pads may be vias through the board **104** and the electrical connection is made on the opposite side, i.e., the bottom, of the board. Mounting board **104**, as illustrated, is rectangular in dimension. LEDs **102** mounted to mounting board **104** may be arranged in different configurations on rectangular mounting board **104**. In one example LEDs **102** are aligned in rows extending in the length dimension and in columns extending in the width dimension of mounting board **104**. In another example, LEDs **102** are arranged in a hexagonally closely packed structure. In such an arrangement each LED is equidistant from each of its immediate neighbors. Such an arrangement is desirable to increase the uniformity and efficiency of light emitted from the light source subassembly **115**.

[0031] FIG. **4** illustrates a cut-away view of luminaire **150** as depicted in FIG. **2**. Reflector **140** is removably coupled to illumination device **100**. Reflector **140** is coupled to illumination device **100** by a twist-lock mechanism. Reflector **140** is aligned with illumination device **100** by bringing reflector **140** into contact with illumination device **100** through openings in reflector retaining ring **110**. Reflector **140** is coupled to illumination device **100** by rotating reflector **140** about optical axis (OA) to an engaged position. In the engaged position, the reflector **140** is captured between mounting board retaining ring **103** and reflector retaining ring **110**. In the engaged position, an interface pressure may be generated between mating thermal interface surface $\mathbf{140}_{surface}$ of reflector **140** and mounting board retaining ring **103**. In this manner, heat generated by LEDs **102** may be conducted via mounting board **104**, through mounting board retaining ring **103**, through interface $\mathbf{140}_{surface}$, and into reflector **140**. In addition, a plurality of electrical connections may be formed between reflector **140** and retaining ring **103**.

[0032] Illumination device **100** includes an electrical interface module (EIM) **120**. As illustrated, EIM **120** may be removably attached to illumination device **100** by retaining clips **137**. In other embodiments, EIM **120** may be removably attached to illumination device **100** by an electrical connector coupling EIM **120** to mounting board **104**. EIM **120** may also be coupled to illumination device **100** by other fastening means, e.g. screw fasteners, rivets, or snap-fit connectors. As depicted EIM **120** is positioned within a cavity of illumination device **100**. In this manner, EIM **120** is contained within illumination device **100** and is accessible from the bottom side of illumination device **100**. In other embodiments, EIM **120** may be at least partially positioned within light fixture **130**. The EIM **120** communicates electrical signals from light fixture **130** to illumination device **100**. Electrical conductors **132** are coupled to light fixture **130** at electrical connector **133**. By way of example, electrical connector **133** may be a registered jack (RJ) connector commonly used in network communications applications. In other examples, electrical conductors **132** may be coupled to light fixture **130** by screws or clamps. In other examples, electrical conductors **132** may be coupled to light fixture **130** by a removable slip-fit electrical connector. Connector **133** is coupled to conductors **134**. Conductors **134** are removably coupled to electrical connector **121** mounted to EIM **120**. Similarly, electrical connector **121** may be a RJ connector or any suitable removable electrical connector. Connector **121** is fixedly coupled to EIM **120**. Electrical signals **135** are communicated over conductors **132** through electrical connector **133**, over conductors **134**, through electrical connector **121** to EIM **120**. Electrical

signals **135** may include power signals and data signals. EIM **120** routes electrical signals **135** from electrical connector **121** to appropriate electrical contact pads on EIM **120**. For example, conductor **139** within EIM **120** may couple connector **121** to electrical contact pad **170** on the top surface of EIM **120**. Alternatively, connector **121** may be mounted on the same side of EIM **120** as the electrical contact pads **170**, and thus, a surface conductor may couple connector **121** to the electrical contact pads **170**. As illustrated, spring pin **122** removably couples electrical contact pad **170** to mounting board **104** through an aperture **138** in mounting base **101**. Spring pins couple contact pads disposed on the top surface of EIM **120** to contact pads of mounting board **104**. In this manner, electrical signals are communicated from EIM **120** to mounting board **104**. Mounting board **104** includes conductors to appropriately couple LEDs **102** to the contact pads of mounting board **104**. In this manner, electrical signals are communicated from mounting board **104** to appropriate LEDs **102** to generate light. EIM **120** may be constructed from a printed circuit board (PCB), a metal core PCB, a ceramic substrate, or a semiconductor substrate. Other types of boards may be used, such as those made of alumina (aluminum oxide in ceramic form), or aluminum nitride (also in ceramic form). EIM **120** may be a constructed as a plastic part including a plurality of insert molded metal conductors.

[0033] Mounting base **101** is replaceably coupled to light fixture **130**. In the illustrated example, light fixture **130** acts as a heat sink. Mounting base **101** and light fixture **130** are coupled together at a thermal interface **136**. At the thermal interface **136**, a portion of mounting base **101** and a portion of light fixture **130** are brought into contact as illumination device **100** is coupled to light fixture **130**. In this manner, heat generated by LEDs **102** may be conducted via mounting board **104**, through mounting base **101**, through interface **136**, and into light fixture **130**.

[0034] To remove and replace illumination device **100**, illumination device **100** is decoupled from light fixture **130** and electrical connector **121** is disconnected. In one example, conductors **134** includes sufficient length to allow sufficient separation between illumination device **100** and light fixture **130** to allow an operator to reach between fixture **130** and illumination device **100** to disconnect connector **121**. In another example, connector **121** may be arranged such that a displacement between illumination device **100** from light fixture **130** operates to disconnect connector **121**. In another example, conductors **134** are wound around a spring-loaded reel. In this manner, conductors **134** may be extended by unwinding from the reel to allow for connection or disconnection of connector **121**, and then conductors **134** may be retracted by winding conductors **134** onto the reel by action of spring-loaded reel.

[0035] FIGS. **5**A-B illustrate EIM **120** coupled to mounting board **104** in two different configurations. As illustrated in FIG. **5**A, mounting board **104** is coupled to EIM **120** by spring pin assembly **123** in a first configuration. EIM **120** includes conductors **124** and **125**. Electrical signal **126** is communicated from connector **121**, over conductor **124**, over spring pin assembly **123** in a first configuration to terminal **128** of mounting board **104**. Electrical signal **127** is communicated from terminal **129** of mounting board **104**, over spring pin assembly **123** in a first configuration, over conductor **125**, to connector **121**. As illustrated in FIG. **5**B, mounting board **104** is coupled to EIM **120** by spring pin assembly **123** in a second configuration. Electrical signal **126** is communicated from connector **121**, over conductor **124**, over spring pin assembly **123** in the second configuration to terminal **141** of mounting board **104**. Electrical signal **127** is communicated from terminal **142** of mounting board **104**, over spring pin assembly **123** in a second configuration, over conductor **125**, to connector **121**. As illustrated in FIGS. **5**A-B, the same EIM **120** may communicate electrical signals to mounting boards with different terminal locations. Conductors **124** and **125** are configured such that the same signal from connector **121** can be communicated between multiple terminals at the interface between EIM **120** and spring pin assembly **123**. Different configurations of spring pin assembly **123** can be utilized to communicate signals to different terminal locations of mounting board **104**. In this manner, the same connector **121** and EIM **120** may be utilized to address a variety of different terminal configurations of mounting boards within illumination device **100**.

[0036] In other embodiments, the same spring pin assembly **123**, connector **121**, and EIM **120** may be utilized to address a variety of different terminal configurations of mounting boards within illumination device **100**. As illustrated in FIGS. **6**A-B, by selectively masking and exposing terminal locations on the surface of mounting board **104**, different terminals of mounting board **104** may be coupled to spring pin assembly **123**. As discussed above with respect to FIGS. **5**A and **5**B, EIM **120** may supply electrical signals to mounting boards of different physical configurations. Conductors **124** and **125** are configured such that a signal from connector **121** can be communicated to multiple terminals at the interface between EIM **120** and spring pin assembly **123**. In this manner, the same connector **121**, EIM **120**, and spring pin assembly **123** may be utilized to address a variety of different terminal configurations of mounting boards within illumination device **100** by selectively masking and exposing terminal locations on the surface of mounting board **104**, illustrated in FIG. **6**A as masked terminal $\mathbf{142}_{MASKED}$ and exposed terminal $\mathbf{129}_{EXPOSED}$ and illustrated in FIG. **6**B exposed terminal $\mathbf{142}_{EXPOSED}$ and masked terminal $\mathbf{129}_{MASKED}$.

[0037] As depicted in FIGS. **4** and **6**A, **6**B, spring pin assembly **123** includes a plurality of spring pins. As depicted in FIG. **7**, the plurality of spring pins in the spring pin assembly **123** may be positioned with respect to one another by a lead frame **143**. In other embodiments, the plurality of spring pins may be molded in with frame **143** to generate molded-in lead frame **143**. The lead frame **143** may be connected to EIM **120** or to mounting base **101**. Spring pin **122** may be shaped such that the spring pin **122** is compliant along the axis of the pin, as depicted in FIG. **4**. For example, pin **122** includes a hook shape at one end that serves to make contact with a terminal, but also serves to displace when a force is applied between the two ends of the pin. The compliance of each pin of spring pin assembly **123** ensures that each pin makes contact with terminals on each end of each pin when EIM **120** and mounting board **104** are brought into electrical contact. In other embodiments, spring pin **122** may include multiple parts to achieve compliance along the axial direction of pin **122** as illustrated in FIG. **8**. Electrical contact between each spring pin and EIM **120** may be made at the top surface of EIM **120**, but may also be made at the bottom surface.

[0038] Although, as depicted in FIG. **4**, a RJ connector is employed to couple light fixture **130** to EIM **120**, other connector configurations may be contemplated. In some embodiments, a slip connector may be employed to electrically

couple EIM **120** to fixture **130**. In other embodiments, a plurality of radially spaced electrical contacts may be employed. For example, FIGS. **9**A-C illustrate an embodiment that employs a plurality of radially spaced electrical contacts. FIG. **9**A illustrates a side view of light fixture **130** and EIM **120**. FIG. **9**B illustrates a bottom view of EIM **120**. EIM **120** includes a plurality of radially spaced electrical contacts **152**. As depicted, electrical contacts **152** are circular shaped, but other elliptical or polygonal shapes may be contemplated. When EIM **120** is coupled to light fixture **130**, contacts **152** align and make contact with spring contacts **151** of light fixture **130**. FIG. **9**C illustrates a top view of light fixture **130** including spring contacts **151**. In the depicted configuration, EIM **120** may be aligned with light fixture **130** and make electrical contact with fixture **130** regardless of the orientation of EIM **120** with respect to fixture **130**. In other examples, an alignment feature may be utilized to align EIM **120** with light fixture **130** in a predetermined orientation.

[0039] FIG. **10** is a schematic diagram illustrative of EIM **120** in greater detail. In the depicted embodiment, EIM **120** includes bus **21**, powered device interface controller (PDIC) **34**, processor **22**, elapsed time counter module (ETCM) **27**, an amount of non-volatile memory **26** (e.g. EPROM), an amount of non-volatile memory **23** (e.g. flash memory), infrared transceiver **25**, RF transceiver **24**, sensor interface **28**, power converter interface **29**, power converter **30**, and LED selection module **40**. LED mounting board **104** is coupled to EIM **120**. LED mounting board **104** includes flux sensor **36**, LED circuitry **33** including LEDs **102**, and temperature sensor **31**. EIM **120** is also coupled to flux sensor **32** and occupancy sensor **35** mounted to light fixture **130**. In some embodiments, flux sensor **32** and occupancy sensor **35** may be mounted to an optic, such as reflector **140** as discussed with respect to FIG. **14**. In some embodiments, an occupancy sensor may also be mounted to mounting board **104**. In some embodiments, any of an accelerometer, a pressure sensor, and a humidity sensor may be mounted to mounting board **104**. For example, an accelerometer may be added to detect the orientation of illumination device **100** with respect to the gravitational field. In another example, the accelerometer may provide a measure of vibration present in the operating environment of illumination device **100**. In another example, a humidity sensor may be added to provide a measure of the moisture content of the operating environment of illumination device **100**. For example, if illumination device **100** is sealed to reliably operate in wet conditions, the humidity sensor may be employed to detect a failure of the seal and contamination of the illumination device. In another example, a pressure sensor may be employed to provide a measure of the pressure of the operating environment of illumination device **100**. For example, if illumination device **100** is sealed and evacuated, or alternatively, sealed and pressurized, the pressure sensor may be employed to detect a failure of the seal.

[0040] PDIC **34** is coupled to connector **121** and receives electrical signals **135** over conductors **134**. In one example, PDIC **34** is a device complying with the IEEE 802.3 protocol for transmitting power and data signals over multi-conductor cabling (e.g. category 5e cable). PDIC **34** separates incoming signals **135** into data signals **41** communicated to bus **21** and power signals **42** communicated to power converter **30** in accordance with the IEEE 802.3 protocol. Power converter **30** operates to perform power conversion to generate electrical signals to drive one or more LED circuits of circuitry **33**. In some embodiments, power converter **30** operates in a current control mode to supply a controlled amount of current to LED circuits within a predefined voltage range. In some embodiments, power converter **30** is a direct current to direct current (DC-DC) power converter. In these embodiments, power signals **42** may have a nominal voltage of 48 volts in accordance with the IEEE 802.3 standard. Power signals **42** are stepped down in voltage by DC-DC power converter **30** to voltage levels that meet the voltage requirements of each LED circuit coupled to DC-DC converter **30**.

[0041] In some other embodiments, power converter **30** is an alternating current to direct current (AC-DC) power converter. In yet other embodiments, power converter **30** is an alternating current to alternating current (AC-AC) power converter. In embodiments employing AC-AC power converter **30**, LEDs **102** mounted to mounting board **104** generate light from AC electrical signals. Power converter **30** may be single channel or multi-channel. Each channel of power converter **30** supplies electrical power to one LED circuit of series connected LEDs. In one embodiment power converter **30** operates in a constant current mode. This is particularly useful where LEDs are electrically connected in series. In some other embodiments, power converter **30** may operate as a constant voltage source. This may be particularly useful where LEDs are electrically connected in parallel.

[0042] As depicted, power converter **30** is coupled to power converter interface **29**. In this embodiment, power converter interface **29** includes a digital to analog (D/A) capability. Digital commands may be generated by operation of processor **22** and communicated to power converter interface **29** over bus **21**. Interface **29** converts the digital command signals to analog signals and communicates the resulting analog signals to power converter **30**. Power converter **30** adjusts the current communicated to coupled LED circuits in response to the received analog signals. In some examples, power converter **30** may shut down in response to the received signals. In other examples, power converter **30** may pulse or modulate the current communicated to coupled LED circuits in response to the received analog signals. In some embodiments, power converter **30** is operable to receive digital command signals directly. In these embodiments, power converter interface **29** is not implemented. In some embodiments, power converter **30** is operable to transmit signals. For example, power converter **30** may transmit a signal indicating a power failure condition or power out of regulation condition through power converter interface **29** to bus **21**.

[0043] EIM **120** includes several mechanisms for receiving data from and transmitting data to devices communicatively linked to illumination device **100**. EIM **120** may receive and transmit data over PDIC **34**, RF transceiver **24**, and IR transceiver **25**. In addition, EIM **120** may broadcast data by controlling the light output from illumination device **100**. For example, processor **22** may command the current supplied by power converter **30** to periodically flash, or otherwise modulate in frequency or amplitude, the light output of LED circuitry **33**. The pulses may be detectable by humans, e.g. flashing the light output by illumination device **100** in a sequence of three, one second pulses, every minute. The pulses may also be undetectable by humans, but detectable by a flux detector, e.g. pulsing the light output by illumination device **100** at one kilohertz. In these embodiments, the light output of illumination device **100** can be modulated to indicate a code. Examples of information transmitted by EIM **120** by any of the above-mentioned means includes accumulated

elapsed time of illumination device **100**, LED failure, serial number, occupancy sensed by occupancy sensor **35**, flux sensed by on-board flux sensor **36**, flux sensed by flux sensor **32**, and temperature sensed by temperature sensor **31**, and power failure condition. In addition, EIM **120** may receive messages by sensing a modulation or cycling of electrical signals supplying power to illumination device **100**. For example, power line voltage may be cycled three times in one minute to indicate a request for illumination device **100** to communicate its serial number.

[0044] FIG. **11** is a schematic illustrative of LED selection module **40** in greater detail. As depicted, LED circuitry **33** includes LEDs **55-59** connected in series and coupled to LED selection module **140**. Although LED circuit **33** includes five series connected LEDs, more or less LEDs may be contemplated. In addition, LED board **104** may include more than one circuit of series connected LEDs. As depicted, LED selection module **40** includes five series connected switching elements **44-48**. Each lead of a switching element is coupled to a corresponding lead of an LED of LED circuit **33**. For example, a first lead of switching element **44** is coupled to the anode of LED **55** at voltage node **49**. In addition, a second lead of switching element **44** is coupled to the cathode of LED **55** at voltage node **50**. In a similar manner switching elements **45-48** are coupled to LEDs **55-58** respectively. In addition, an output channel of power converter **30** is coupled between voltage nodes **49** and **54** forming a current loop **61** conducting current **60**. In some embodiments, switching elements **44-48** may be transistors (e.g. bipolar junction transistors or field effect transistors).

[0045] LED selection module **40** selectively powers LEDs of an LED circuit **33** coupled to a channel of power converter **30**. For example, in an open position, switching element **44** conducts substantially no current between voltage nodes **49** and **50**. In this manner, current **60** flowing from voltage node **49** to voltage node **50** passes through LED **55**. In this case, LED **55** offers a conduction path of substantially lower resistance than switching element **44**, thus current passes through LED **55** and light is generated. In this way switching element **44** acts to "switch on" LED **55**. By way of example, in a closed position, switching element **47** is substantially conductive. Current **60** flows from voltage node **52** to node **53** through switching element **47**. In this case, switching element **47** offers a conduction path of substantially lower resistance than LED **57**, thus current **60** passes through switching element **47**, rather than LED **57**, and LED **57** does not generate light. In this way switching element **47** acts to "switch off" LED **58**. In the described manner, switching elements **44-48** may selectively power LEDs **55-59**.

[0046] A binary control signal SEL [5:1] is received onto LED selection module **40**. Control signal SEL [5:1] controls the state of each of switching elements **44-48**, and thus determines whether each of LEDs **55-59** is "switched on" or "switched off." In one embodiment, control signal, SEL, is generated by processor **22** in response to a condition detected by EIM **120** (e.g. reduction in flux sensed by flux sensor **36**). In other embodiments, control signal, SEL, is generated by processor **22** in response to a command signal received onto EIM **120** (e.g. communication received by RF transceiver **24**, IR transceiver **25**, or PDIC **34**). In another embodiment, the control signal, SEL, is communicated from an on-board controller of the LED illumination device.

[0047] FIG. **12** is illustrative of how LEDs may be switched on or off to change the amount of flux emitted by powered LEDs of LED circuit **33**. Current **60** is plotted against the luminous flux emitted by powered LEDs of LED circuit **33**. Due to physical limitations of LEDs **55-59**, current **60** is limited to a maximum current level, I_{max}, above which lifetime becomes severely limited. In one example, $I_{max, \text{ may be}}$ 0.7 Ampere. In general LEDs **55-59** exhibit a linear relationship between luminous flux and drive current. FIG. **12** illustrates luminous flux emitted as a function of drive current for four cases: when one LED is "switched on", when two LEDs are "switched on", when three LEDs are "switched on", and when four LEDs are "switched on". In one example, a luminous output, L_3, may be achieved by switching on three LEDs and driving them at Imax. Alternatively, luminous output, L_3, may be achieved by switching on four LEDs and driving them with less current. When reduced amounts of light are required for a period of time (e.g. dimming of restaurant lighting), light selection module **40** may be used to selectively "switch off" LEDs, rather than simply scaling back current. This may be desirable to increase the lifetime of "switched off" LEDs in light fixture by not operating them for selected periods. The LEDs selected to be "switched off" may be scheduled such that each LED is "switched off" for approximately the same amount of time as the others. In this way, the lifetime of illumination device **100** may be extended by extending the life of each LED by approximately the same amount of time.

[0048] LEDs **55-59** may be selectively switched on or off to respond to an LED failure. In one embodiment, illumination device **100** includes extra LEDs that are "switched off." However, when an LED failure occurs, one or more of the extra LEDs are "switched on" to compensate for the failed LED. In another example, extra LEDs may be "switched on" to provide additional light output. This may be desirable when the required luminous output of illumination device **100** is not known prior to installation or when illumination requirements change after installation.

[0049] FIG. **13** is a flow chart illustrating a process of externally communicating LED illumination device information. As illustrated, information associated with the LED illumination device is stored locally, e.g., in non-volatile memory **23** and/or **26** (**202**). The information, by way of example, may be a LED illumination device identifier such as a serial number, or information related to parameters, such as lifetime, flux, occupancy, LED or power failure conditions, temperature, or any other desired parameter. In some instances, the information is measured, such as lifetime, flux, or temperature, while in other instances, the information need not be measured, such as an illumination device identifier or configuration information. A request for information is received (**204**), e.g., by RF transceiver **24**, IR transceiver, a wired connection, or cycling the power line voltage. The LED illumination device information is communicated (**206**), e.g., by RF transceiver **24**, IR transceiver, a wired connection, or by controlling the light output from illumination device **100**.

[0050] EIM **120** stores a serial number that individually identifies the illumination device **100** to which EIM **120** is a part. The serial number is stored in non-volatile memory **26** of EIM **120**. In one example, non-volatile memory **26** is an erasable programmable read-only memory (EPROM). A serial number that identifies illumination device **100** is programmed into EPROM **26** during manufacture. EIM **120** may communicate the serial number in response to receiving a request to transmit the serial number (e.g. communication received by RF transceiver **24**, IR transceiver **25**, or PDIC **34**). For example, a request for communication of the illumination

device serial number is received onto EIM **120** (e.g. communication received by RF transceiver **24**, IR transceiver **25**, or PDIC **34**). In response, processor **22** reads the serial number stored in memory **26**, and communicates the serial number to any of RF transceiver **24**, IR transceiver **25**, or PDIC **34** for communication of the serial number from EIM **120**.

[0051] EIM **120** includes temperature measurement, recording, and communication functionality. At power-up of illumination device **100**, sensor interface **28** receives temperature measurements from temperature sensor **31**. Processor **22** periodically reads a current temperature measurement from sensor interface **28** and writes the current temperature measurement to memory **23** as TEMP. In addition, processor **22** compares the measurement with a maximum temperature measurement value (TMAX) and a minimum temperature value (TMIN) stored in memory **23**. If processor **22** determines that the current temperature measurement is greater than TMAX, processor **22** overwrites TMAX with the current temperature measurement. If processor **22** determines that the current temperature measurement is less than TMIN, processor **22** overwrites TMIN with the current temperature measurement. In some embodiments, processor **22** calculates a difference between TMAX and TMIN and transmits this difference value. In some embodiments, initial values for TMIN and TMAX are stored in memory **26**. In other embodiments, when the current temperature measurement exceeds TMAX or falls below TMIN, EIM **120** communicates an alarm. For example, when processor **22** detects that the current temperature measurement has reached or exceeded TMAX, processor **22** communicates an alarm code over RF transceiver **24**, IR transceiver **25**, or PDIC **34**. In other embodiments, EIM **120** may broadcast the alarm by controlling the light output from illumination device **100**. For example, processor **22** may command the current supplied by power converter **30** to be periodically pulsed to indicate the alarm condition. The pulses may be detectable by humans, e.g. flashing the light output by illumination device **100** in a sequence of three, one second pulses every five minutes. The pulses may also be undetectable by humans, but detectable by a flux detector, e.g. pulsing the light output by illumination device **100** at one kilohertz. In these embodiments, the light output of illumination device **100** could be modulated to indicate an alarm code. In other embodiments, when the current temperature measurement reaches TMAX, EIM **120** shuts down current supply to LED circuitry **33**. In other embodiments, EIM **120** communicates the current temperature measurement in response to receiving a request to transmit the current temperature.

[0052] EIM **120** includes elapsed time counter module **27**. At power-up of illumination device **100**, an accumulated elapsed time (AET) stored in memory **23** is communicated to ETCM **27** and ETCM **27** begins counting time and incrementing the elapsed time. Periodically, a copy of the elapsed time is communicated and stored in memory **23** such that a current AET is stored in non-volatile memory at all times. In this manner, the current AET will not be lost when illumination device **100** is powered down unexpectedly. In some embodiments, processor **22** may include ETCM functionality on-chip. In some embodiments, EIM **120** stores a target lifetime value (TLV) that identifies the desired lifetime of illumination device **100**. The target lifetime value is stored in non-volatile memory **26** of EIM **120**. A target lifetime value associated with a particular illumination device **100** is programmed into EPROM **26** during manufacture. In some examples, the target lifetime value may be selected to be the expected number of operating hours of illumination device **100** before a 30% degradation in luminous flux output of illumination device **100** is expected to occur. In one example, the target lifetime value may be 50,000 hours. In some embodiments, processor **22** calculates a difference between the AET and the TLV. In some embodiments, when the AET reaches the TLV, EIM **120** communicates an alarm. For example, when processor **22** detects that the AET has reached or exceeded the TLV, processor **22** communicates an alarm code over RF transceiver **24**, IR transceiver **25**, or PDIC **34**. In other embodiments, EIM **120** may broadcast the alarm by controlling the light output from illumination device **100**. For example, processor **22** may command the current supplied by power converter **30** to be periodically pulsed to indicate the alarm condition. The pulses may be detectable by humans, e.g. flashing the light output by illumination device **100** in a sequence of three, one second pulses every five minutes. The pulses may also be undetectable by humans, but detectable by a flux detector, e.g. pulsing the light output by illumination device **100** at one kilohertz. In these embodiments, the light output of illumination device **100** could be modulated to indicate an alarm code. In other embodiments, when the AET reaches the TLV, EIM **120** shuts down current supply to LED circuitry **33**. In other embodiments, EIM **120** communicates the AET in response to receiving a request to transmit the AET.

[0053] FIG. **14** illustrates an optic in the form of reflector **140** that includes at least one sensor and at least one electrical conductor. FIG. **14** illustrates flux sensor **32** mounted on an interior surface of reflector **140**. Sensor **32** is positioned such that there is a direct line-of-sight between the light sensing surfaces of sensor **32** and output window **108** of illumination device **100**. In one embodiment, sensor **32** is a silicon diode sensor. Sensor **32** is coupled to electrical conductor **62**. Conductor **62** is a conductive trace molded into reflector **140**. In other embodiments, the conductive trace may be printed onto reflector **140**. Conductor **62** passes through the base of reflector **140** and is coupled to a conductive via **65** of mounting board retaining ring **103** when reflector **140** is mounted to illumination device **100**. Conductive via **65** is coupled to conductor **64** of mounting board **104**. Conductor **64** is coupled to EIM **120** via spring pin **66**. In this manner, flux sensor **32** is electrically coupled to EIM **120**. In other embodiments, conductor **62** is coupled directly to conductor **64** of mounting board **104**. Similarly, occupancy detector **35** may be electrically coupled to EIM **120**. In some embodiments, sensors **32** and **35** may be removably coupled to reflector **140** by means of a connector. In other embodiments, sensors **32** and **35** may be fixedly coupled to reflector **140**.

[0054] FIG. **14** also illustrates flux sensor **36** and temperature sensor **31** attached to mounting board **104** of illumination device **100**. Sensors **31** and **36** provide information about the operating condition of illumination device **100** at board level. Any of sensors **31**, **32**, **35**, and **36** may be one of a plurality of such sensors placed at a variety of locations on mounting board **104**, reflector **140**, light fixture **130**, and illumination device **100**. In addition, a color sensor may be employed. FIG. **15** is illustrative of locations where color, flux, and occupancy sensors may be positioned on reflector **140** for exemplary purposes. In one example, sensors may be located in locations A, B, and C. Locations A-C are outwardly facing so that sensors disposed at locations A-C may sense color, flux, or occupancy of a scene illuminated by illumination device **100**. Similarly, sensors at locations F, G, and H are also outwardly

facing and may sense color, flux, or occupancy of a scene illuminated by illumination device **100**. Sensors may also be disposed at locations D and E. Locations D and E are inwardly facing and may detect flux or color of the illuminance of illumination device **100**. The locations of sensors D and E differ in their angle sensitivity to light output by illumination device **100** and differences may be used to characterize the properties of light output by illumination device **100**.

[0055] Although certain specific embodiments are described above for instructional purposes, the teachings of this patent document have general applicability and are not limited to the specific embodiments described above. For example, illumination device **100** is described as including mounting base **101**. However, in some embodiments, mounting base **101** may be excluded. In another example, EIM **120** is described as including bus **21**, powered device interface controller (PDIC) **34**, processor **22**, elapsed time counter module (ETCM) **27**, an amount of non-volatile memory **26** (e.g. EPROM), an amount of non-volatile memory **23** (e.g. flash memory), infrared transceiver **25**, RF transceiver **24**, sensor interface **28**, power converter interface **29**, power converter **30**, and LED selection module **40**. However, in other embodiments, any of these elements may be excluded if their functionality is not desired. In another example, PDIC **34** is described as complying with the IEEE 802.3 standard for communication. However, any manner of distinguishing power and data signals for purposes of reception and transmission of data and power may be employed. In another example, LED based illumination module **100** is depicted in FIGS. **1-2** as a part of a luminaire **150**. However, LED based illumination module **100** may be a part of a replacement lamp or retrofit lamp or may be shaped as a replacement lamp or retrofit lamp. Accordingly, various modifications, adaptations, and combinations of various features of the described embodiments can be practiced without departing from the scope of the invention as set forth in the claims.

What is claimed is:

1. An LED based illumination device comprising:

a processor;

a non-volatile memory coupled to the processor and storing information associated with the LED based illumination device; and

a communications port controlled by the processor to transmit the information from the LED based illumination device.

2. The LED based illumination device of claim **1**, wherein the information comprises any of an indication of a serial number of the LED based illumination device and an indication of a lifetime of the LED based illumination device.

3. The LED based illumination device of claim **1**, further comprising an occupancy sensor, wherein the information comprises an indication of an occupancy sensed by the occupancy sensor.

4. The LED based illumination device of claim **1**, further comprising a flux sensor, wherein the information comprises an indication of a flux sensed by the flux sensor.

5. The LED based illumination device of claim **1**, further comprising a temperature sensor, wherein the information comprises an indication of a temperature sensed by the temperature sensor.

6. The LED based illumination device of claim **1**, wherein the communications port comprises a radio frequency (RF) transmitter, wherein the information is communicated by the RF transmitter.

7. The LED based illumination device of claim **1**, wherein the communications port comprises an infrared (IR) transmitter, wherein the information is communicated by the IR transmitter.

8. The LED based illumination device of claim **1**, wherein the communications port comprises a wired network, wherein the information is communicated over the wired network.

9. The LED based illumination device of claim **8**, wherein the wired network is a power over Ethernet interface.

10. The LED based illumination device of claim **1**, wherein the communications port comprises one or more LEDs in the LED based illumination device, wherein the information is communicated by modulating light output from the one or more LEDs.

11. The LED based illumination device of claim **10**, wherein the light output from the one or more LEDs is modulated at a rate that is detectable by humans.

12. The LED based illumination device of claim **10**, wherein the light output from the one or more LEDs is modulated at a rate that is not detectable by humans.

13. A method comprising:

measuring a lifetime of an LED based illumination device by accumulating a number of cycles generated by an electronic circuit over the lifetime, wherein the electronic circuit is on-board the LED based illumination device; and

communicating an indication of the lifetime.

14. The method of claim **13**, further comprising:

comparing the lifetime with a predetermined threshold value, wherein communicating the indication of the lifetime comprises communicating a signal indicating that the lifetime has exceeded the predetermined threshold value.

15. The method of claim **13**, wherein communicating the indication comprises periodically interrupting light output of the LED based illumination device.

16. The method of claim **13**, wherein communicating the indication comprises transmitting a signal, and wherein the signal is communicated over any one of an IR, RF, or wired communication link.

17. A method comprising:

measuring a property of an LED based illumination device using an electrical interface module of the LED based illumination device; and

communicating an indication of the property from the LED based illumination device.

18. The method of claim **17**, further comprising:

comparing the property with a predetermined threshold value, wherein communicating the indication of the property comprises communicating a signal indicating that the property has exceeded the predetermined threshold value.

19. The method of claim **17**, further comprising:

receiving a request to transmit the indication of the property, wherein communicating the indication of the property is in response to the request.

20. The method of claim **17**, wherein the property is any of a temperature, a serial number, and a lifetime of the LED based illumination device.

* * * * *