US 20050057187A1

(19) United States

(12) Patent Application Publication

(10) Pub. No.: US 2005/0057187 A1

(43) Pub. Date: Mar. 17, 2005

Catalano

(54) UNIVERSAL LIGHT EMITTING ILLUMINATION DEVICE AND METHOD

(75) Inventor: **Anthony Catalano**, Boulder, CO (US)

Correspondence Address:
WALDEAN A. SCHULZ
1919 FOURTEENTH STREET
SUITE 500
BOULDER, CO 80302 (US)

(73) Assignee: **Technology Assessment Group Inc.**, Boulder, CO

(21) Appl. No.: **10/820,930**

(22) Filed: **Apr. 8, 2004**

Related U.S. Application Data

(60) Provisional application No. 60/502,495, filed on Sep. 12, 2003.

Publication Classification

(51) **Int. Cl.**[7] **H05B 37/02**

(52) **U.S. Cl.** **315/291**; 315/72; 315/59

(57) **ABSTRACT**

Disclosed is a method and apparatus for providing a light emitting diode and driving circuitry integrated into a component module that will retrofit common incandescent lightbulb applications. The disclosed embodiments will perform with high efficiency at a wide operating voltage range with a very small size allowing for the incorporation within the envelope and form of existing lightbulb bases. Therefore, a single universal LED light bulb module can be used to replace the dozens of conventional LED and incandescent lights currently being used. The electronic circuitries used to drive the LEDs are extremely compact and consequently can be incorporated in nearly any standard bulb base.

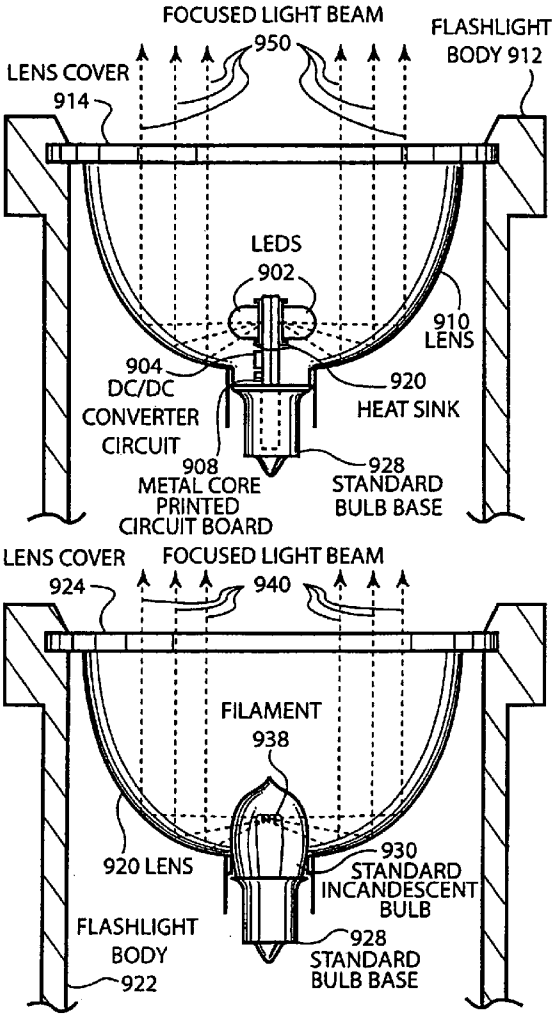

SAMSUNG EXHIBIT 1055

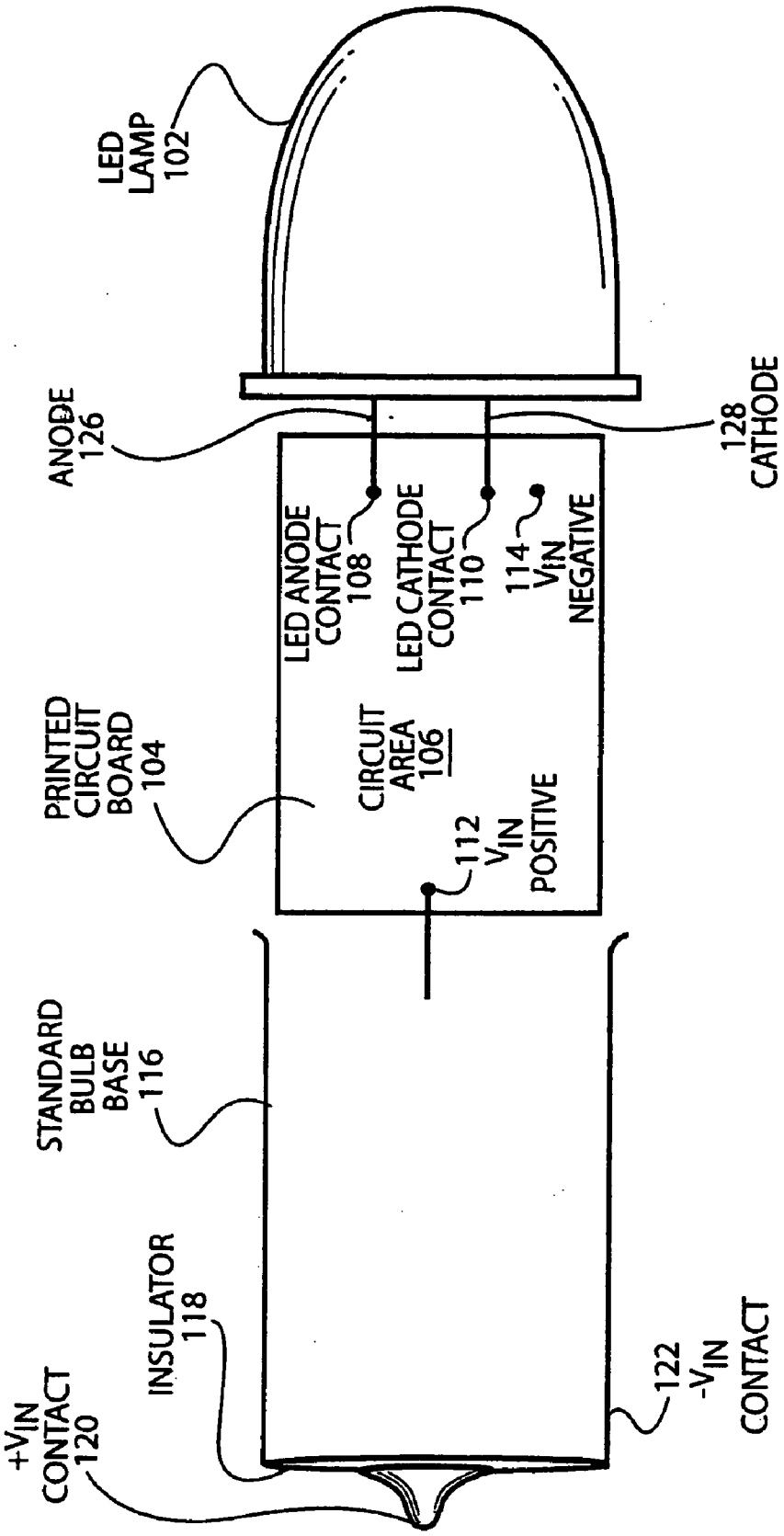
LED LAMP 102
ANODE 126
128 CATHODE
LED ANODE CONTACT 108
LED CATHODE CONTACT 110
114 V_{IN} NEGATIVE
PRINTED CIRCUIT BOARD 104
CIRCUIT AREA 106
112 V_{IN} POSITIVE
STANDARD BULB BASE 116
INSULATOR 118
$+V_{IN}$ CONTACT 120
122 $-V_{IN}$ CONTACT

FIGURE 1

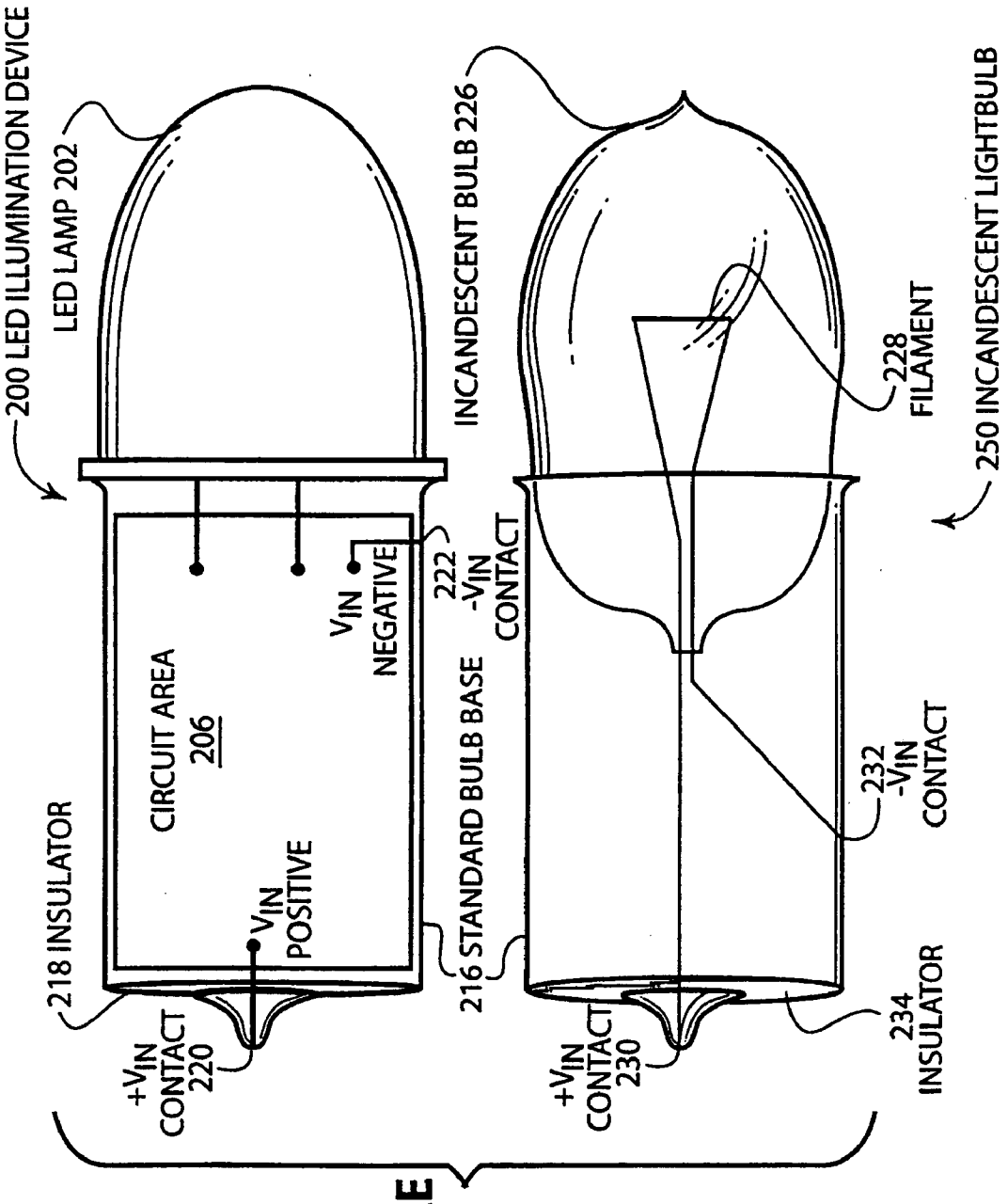
200 LED ILLUMINATION DEVICE
LED LAMP 202
218 INSULATOR
CIRCUIT AREA
206
V_{IN} POSITIVE
V_{IN} NEGATIVE
222 $-V_{IN}$ CONTACT
$+V_{IN}$ CONTACT 220
216 STANDARD BULB BASE
INCANDESCENT BULB 226
$+V_{IN}$ CONTACT 230
228 FILAMENT
232 $-V_{IN}$ CONTACT
234 INSULATOR
250 INCANDESCENT LIGHTBULB

FIGURE 2

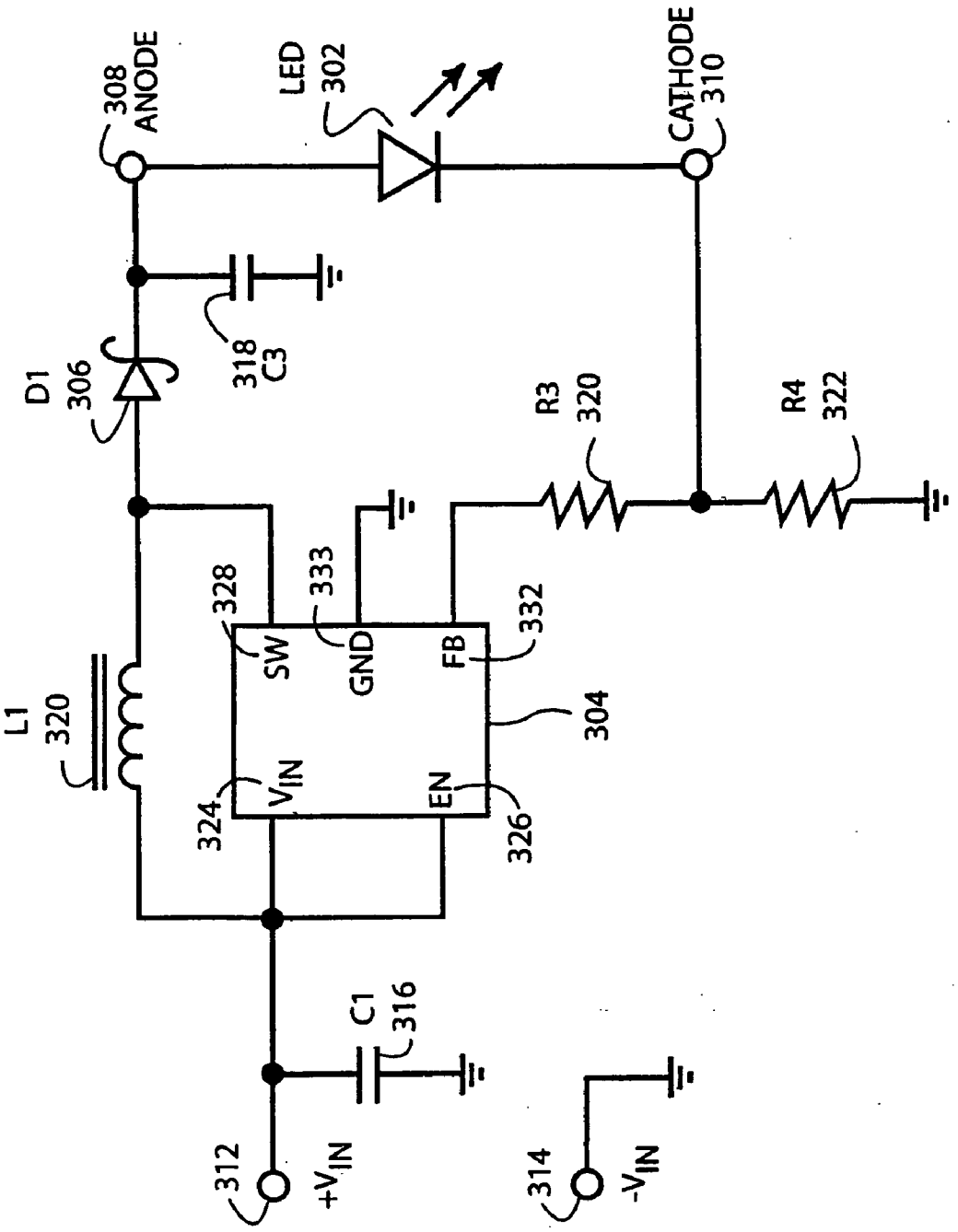
308
ANODE
LED
302
CATHODE
310
D1
306
318
C3
R3
320
R4
322
L1
320
328
SW
333
GND
FB
332
304
324
V_{IN}
EN
326
C1
316
312
$+V_{IN}$
314
$-V_{IN}$

FIGURE 3

FIGURE 4

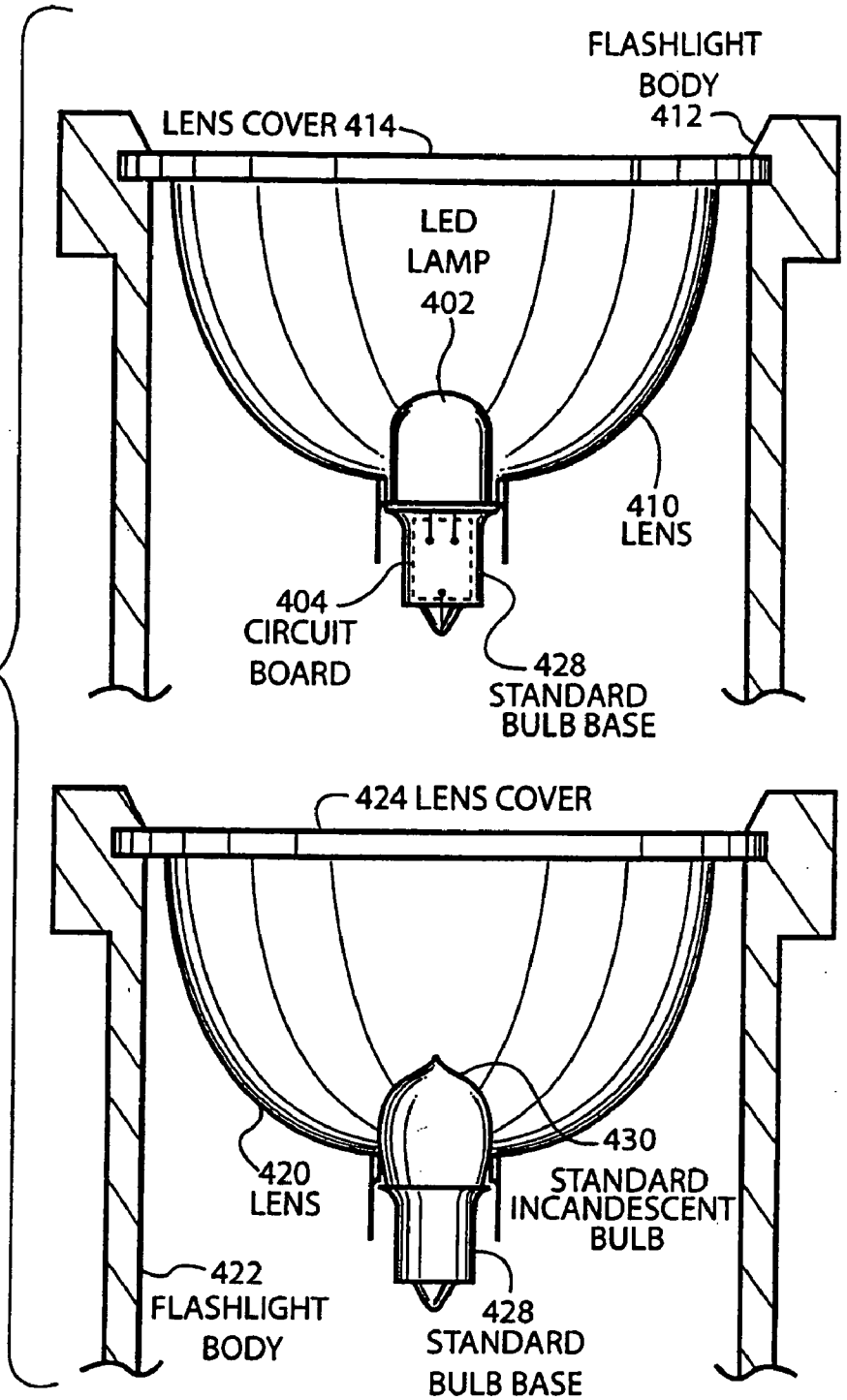
FLASHLIGHT BODY 412
LENS COVER 414
LED LAMP 402
410 LENS
404 CIRCUIT BOARD
428 STANDARD BULB BASE
424 LENS COVER
430 STANDARD INCANDESCENT BULB
420 LENS
422 FLASHLIGHT BODY
428 STANDARD BULB BASE

FIGURE 5

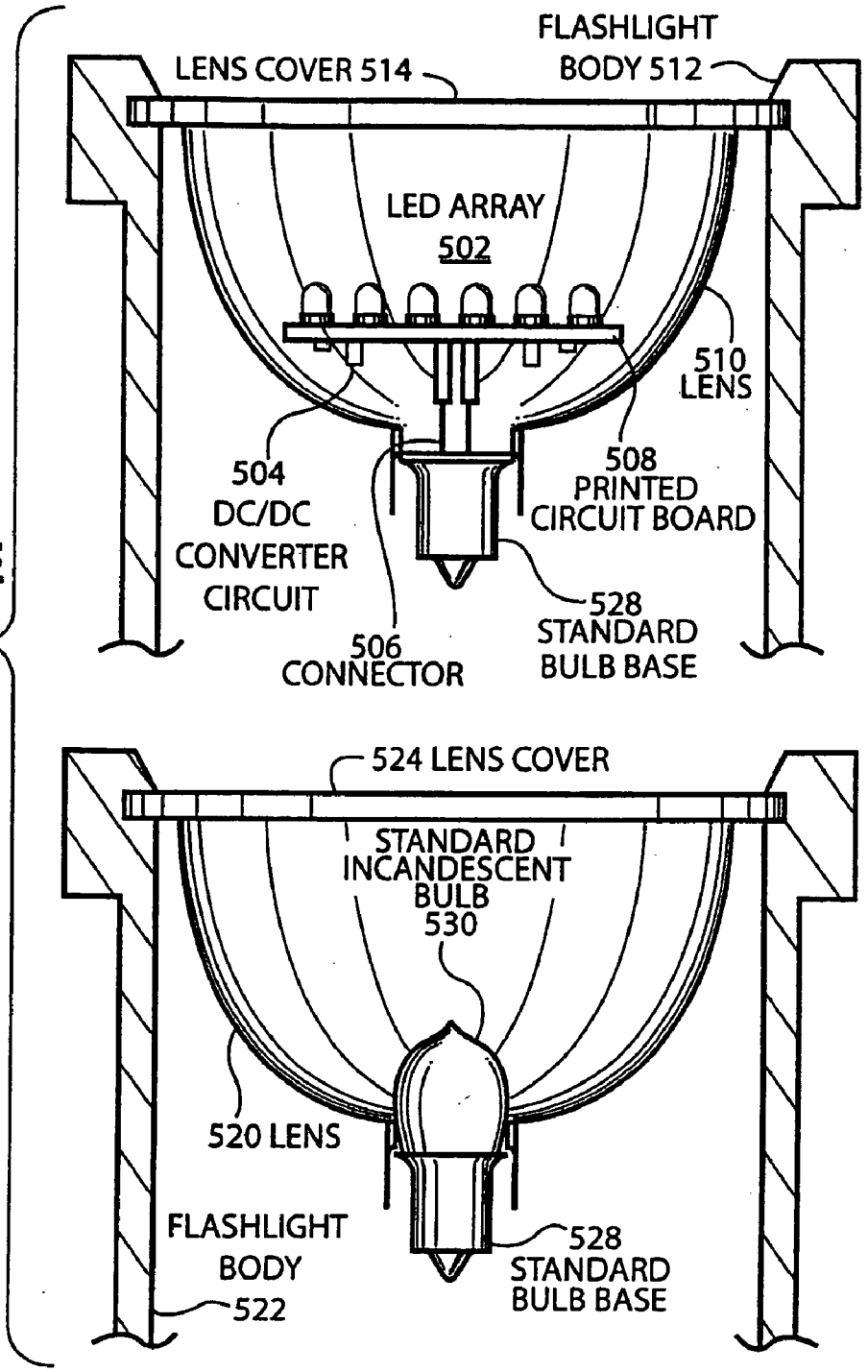
FLASHLIGHT
BODY 512
LENS COVER 514
LED ARRAY
502
510
LENS
504
DC/DC
CONVERTER
CIRCUIT
508
PRINTED
CIRCUIT BOARD
528
STANDARD
BULB BASE
506
CONNECTOR
524 LENS COVER
STANDARD
INCANDESCENT
BULB
530
520 LENS
FLASHLIGHT
BODY
522
528
STANDARD
BULB BASE

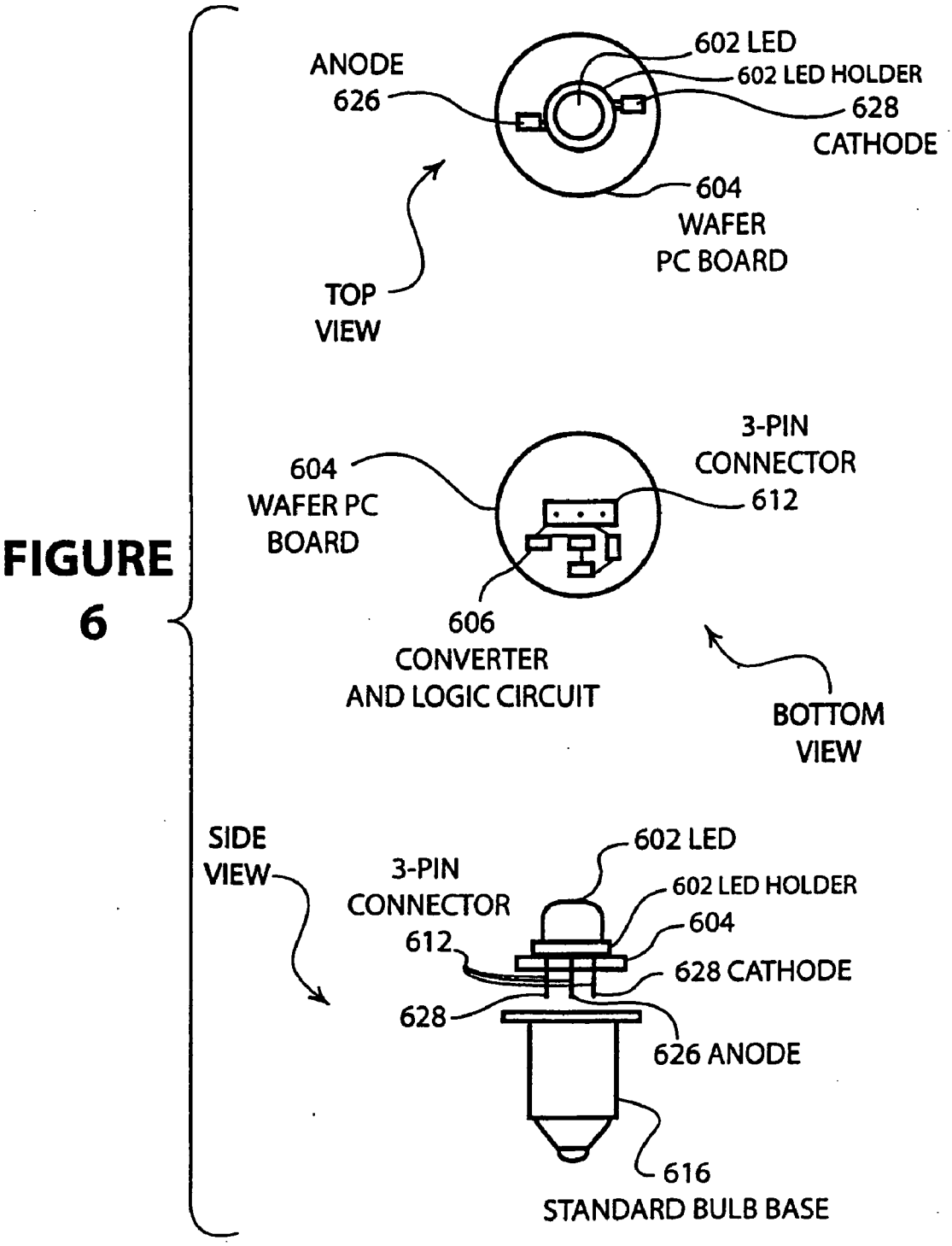
ANODE
626
602 LED
602 LED HOLDER
628
CATHODE
604
WAFER
PC BOARD
TOP
VIEW
604
WAFER PC
BOARD
3-PIN
CONNECTOR
612
606
CONVERTER
AND LOGIC CIRCUIT
BOTTOM
VIEW
SIDE
VIEW
3-PIN
CONNECTOR
612
602 LED
602 LED HOLDER
604
628 CATHODE
628
626 ANODE
616
STANDARD BULB BASE

FIGURE 6

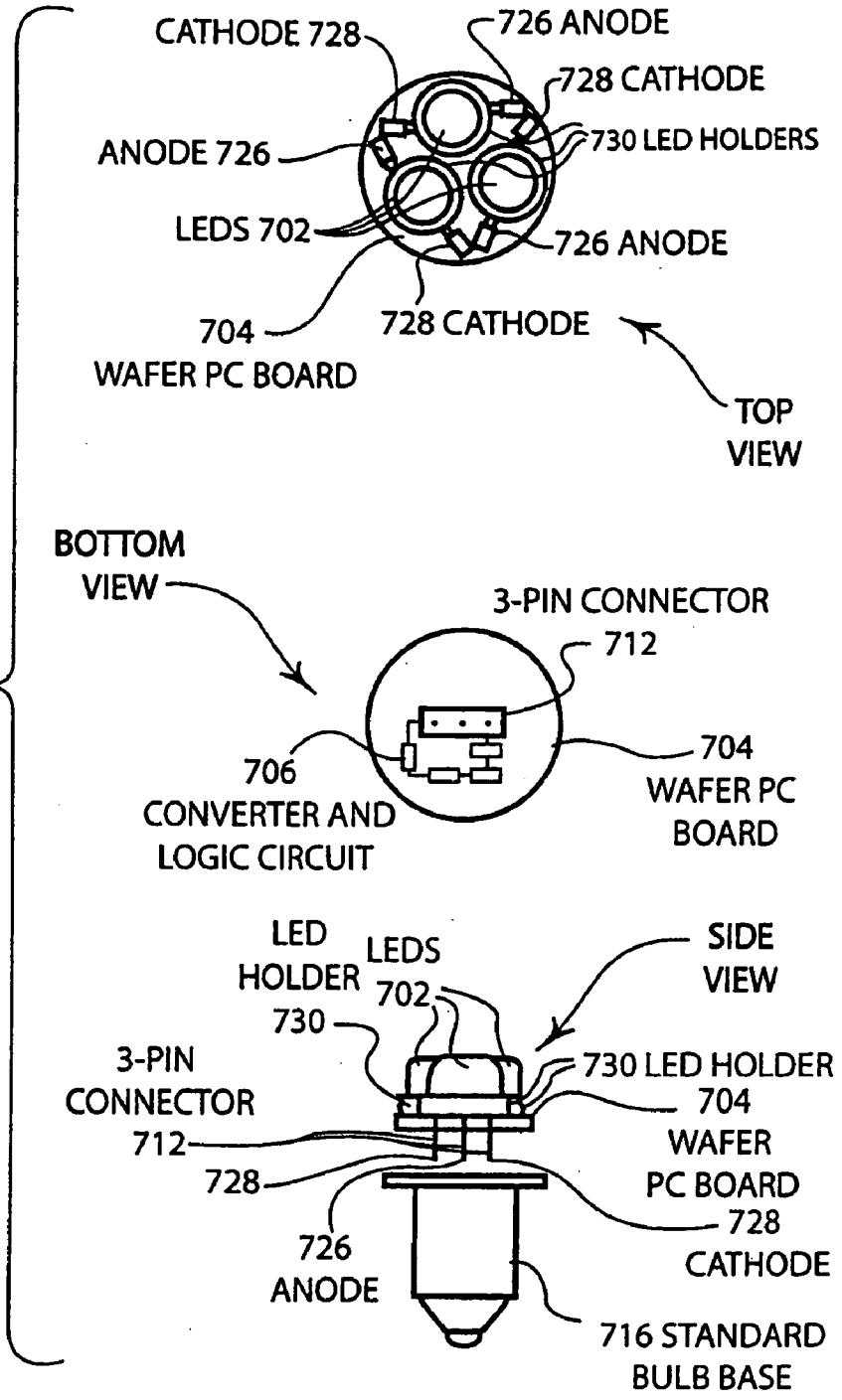
CATHODE 728
726 ANODE
728 CATHODE
730 LED HOLDERS
ANODE 726
LEDS 702
726 ANODE
704
WAFER PC BOARD
728 CATHODE
TOP VIEW
BOTTOM VIEW
3-PIN CONNECTOR
712
706
CONVERTER AND LOGIC CIRCUIT
704
WAFER PC BOARD
LED HOLDER
LEDS
702
730
SIDE VIEW
3-PIN CONNECTOR
712
728
730 LED HOLDER
704
WAFER PC BOARD
728
CATHODE
726
ANODE
716 STANDARD BULB BASE

FIGURE 7

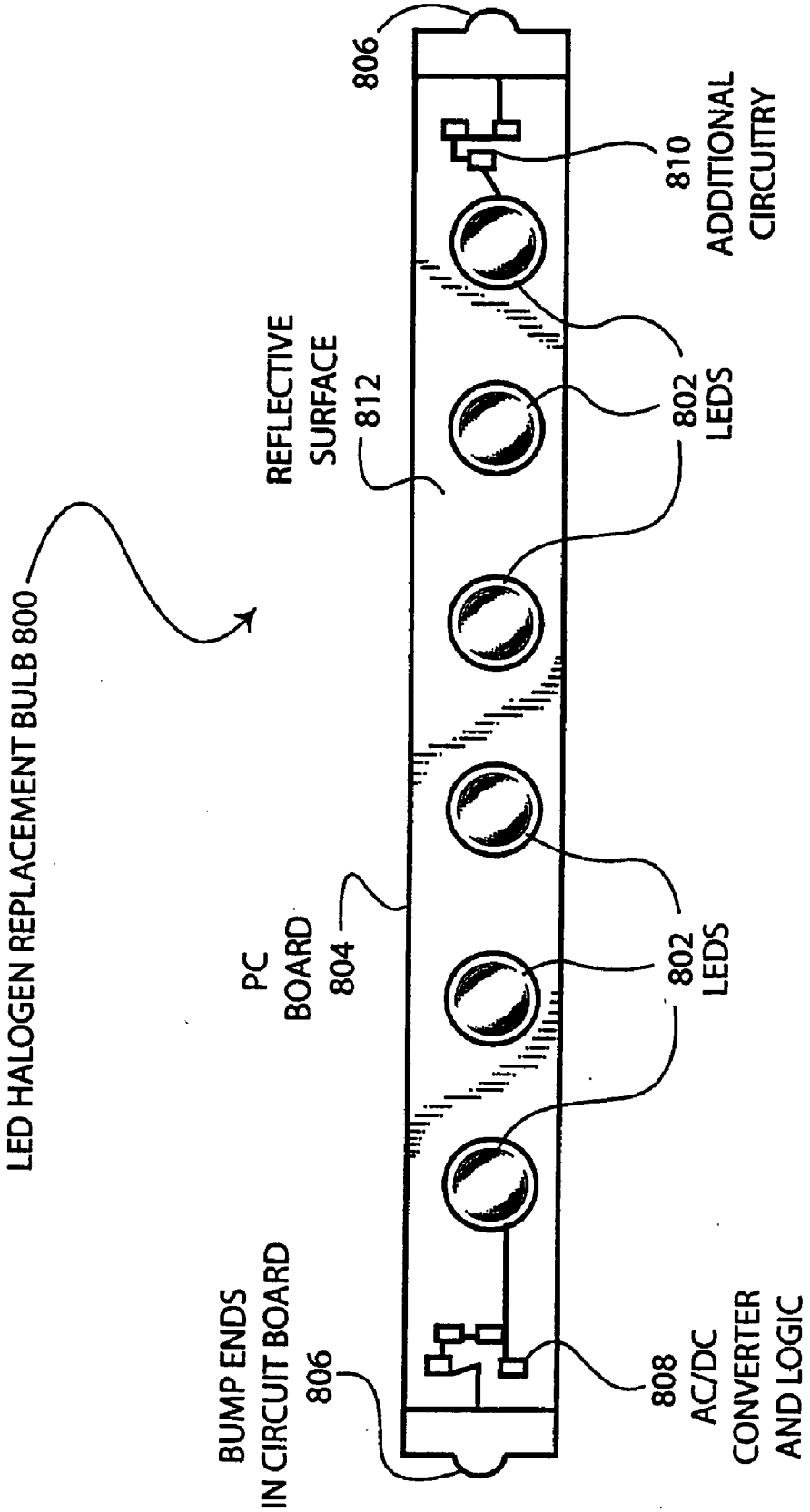
LED HALOGEN REPLACEMENT BULB 800
806
BUMP ENDS
IN CIRCUIT BOARD
806
PC
BOARD
804
REFLECTIVE
SURFACE
812
808
AC/DC
CONVERTER
AND LOGIC
802
LEDS
802
LEDS
810
ADDITIONAL
CIRCUITRY

FIGURE 8

FIGURE 9

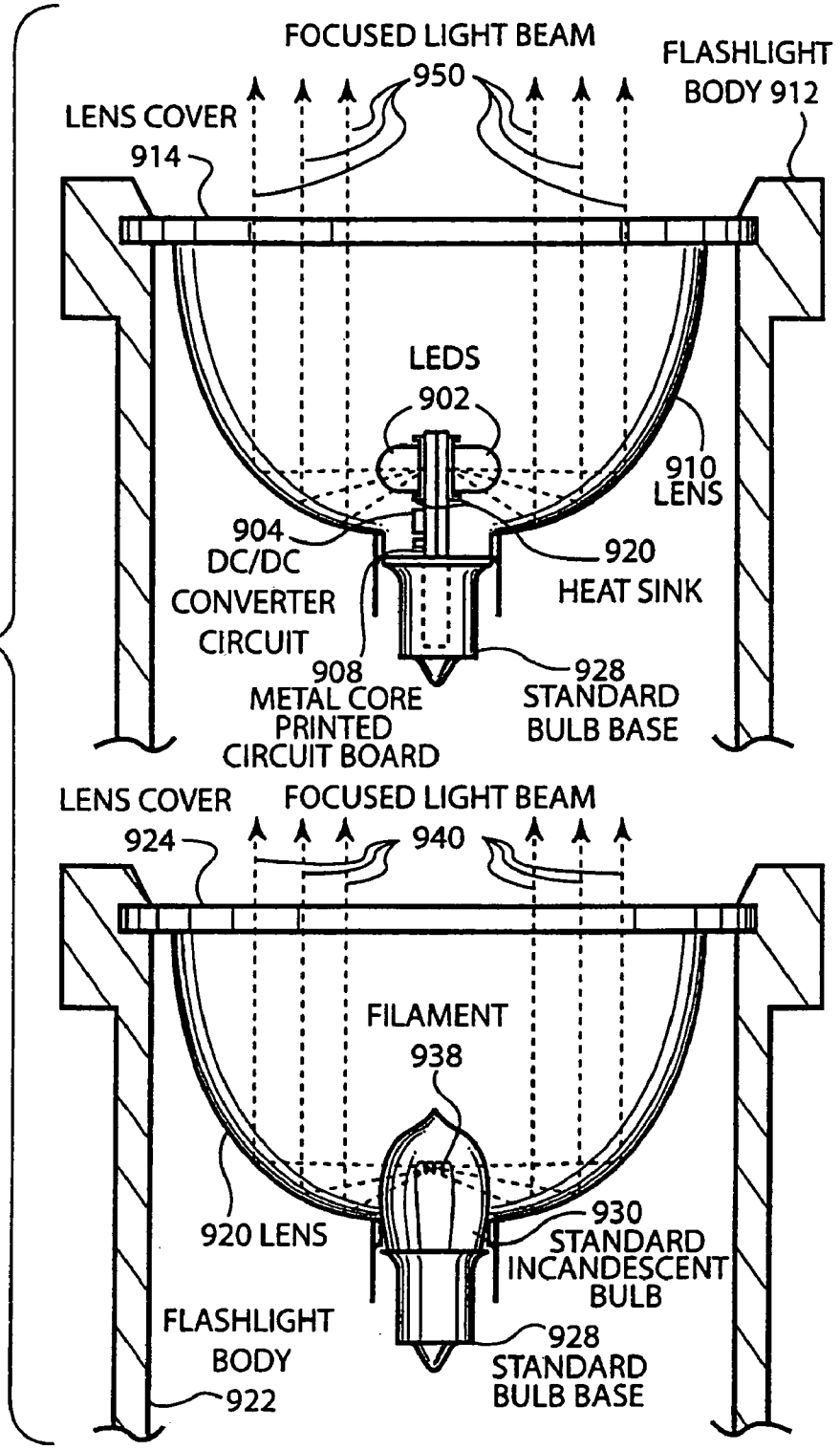
FOCUSED LIGHT BEAM
950
FLASHLIGHT BODY 912
LENS COVER
914
LEDS
902
910 LENS
904
DC/DC CONVERTER CIRCUIT
920
HEAT SINK
908
METAL CORE PRINTED CIRCUIT BOARD
928
STANDARD BULB BASE
LENS COVER
924
FOCUSED LIGHT BEAM
940
FILAMENT
938
920 LENS
930
STANDARD INCANDESCENT BULB
FLASHLIGHT BODY
922
928
STANDARD BULB BASE

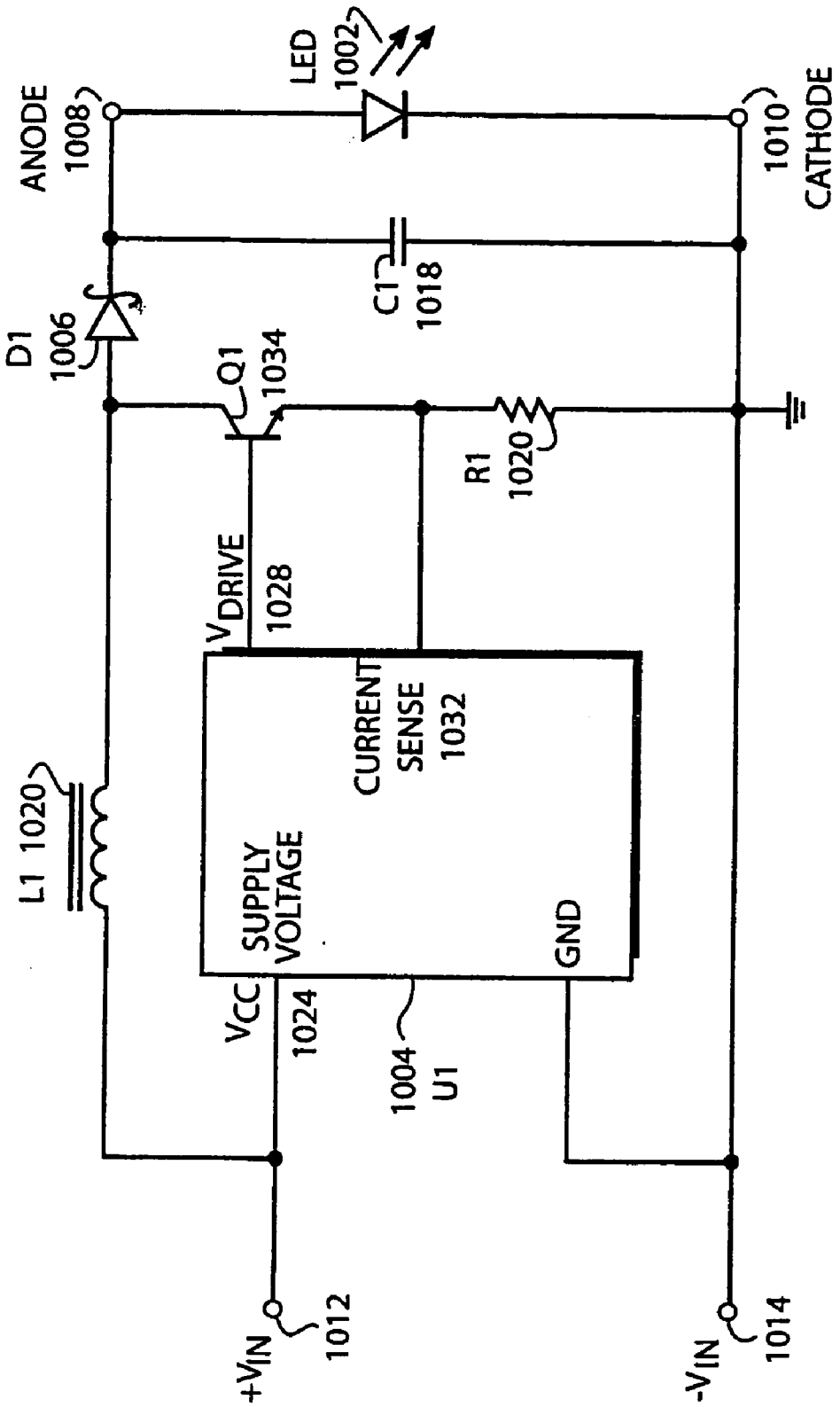
LED
1002
ANODE
1008
1010
CATHODE
C1
1018
D1
1006
Q1
1034
R1
1020
VDRIVE
1028
CURRENT
SENSE
1032
L1 1020
SUPPLY
VOLTAGE
GND
VCC
1024
1004
U1
+VIN
1012
-VIN
1014

FIGURE 10

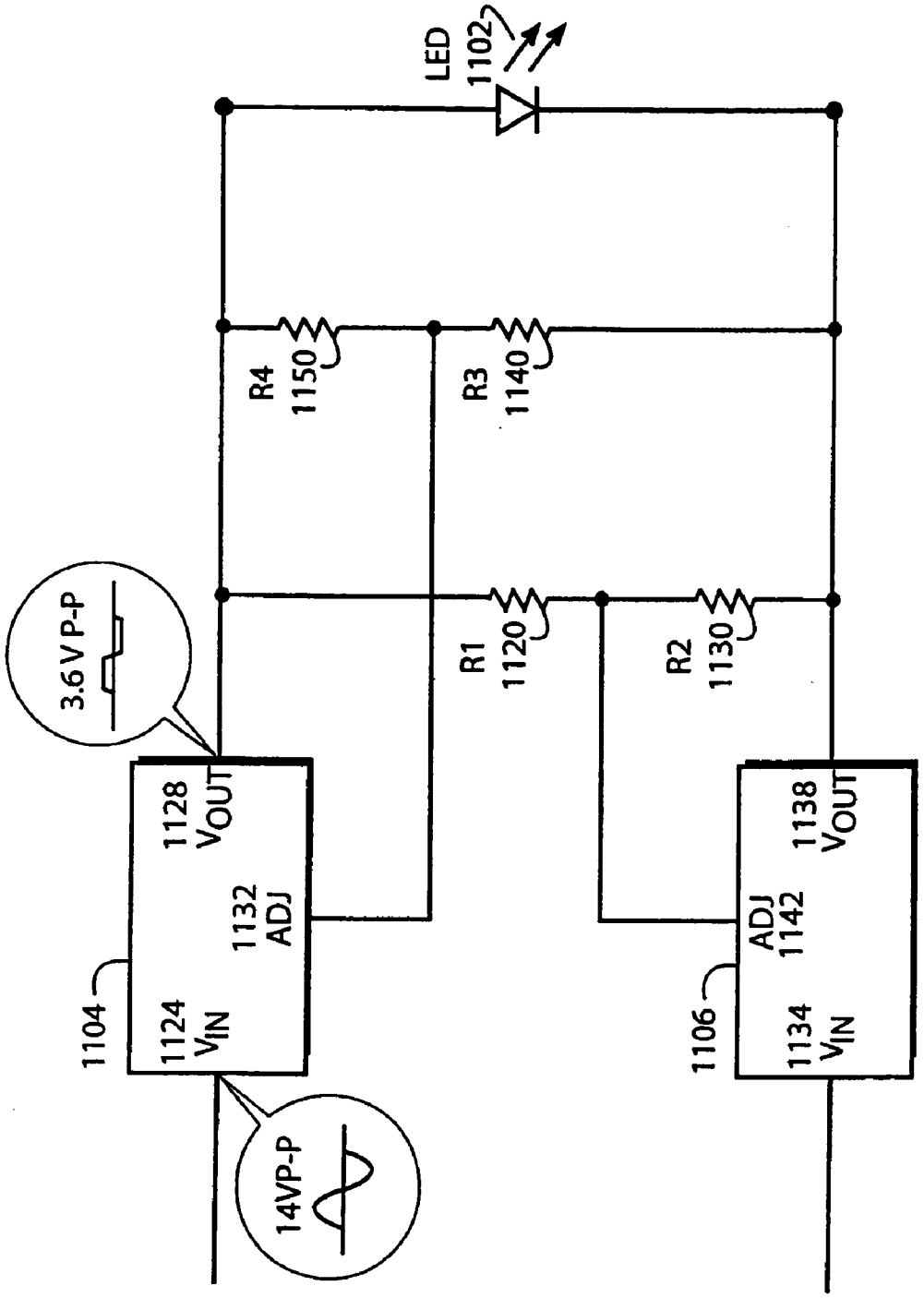
LED
1102
R4
1150
R3
1140
R1
1120
R2
1130
3.6VP-P
1128
VOUT
1132
ADJ
1104
1124
VIN
14VP-P
1138
VOUT
ADJ
1142
1106
1134
VIN

FIGURE 11

UNIVERSAL LIGHT EMITTING ILLUMINATION DEVICE AND METHOD

CROSS-REFERENCE TO RELATED APPLICATION

[0001] This non-provisional patent application claims benefit to provisional application 60/502,495 filed Sep. 12, 2003.

FIELD OF THE INVENTION

[0002] The present invention relates to a light emitting diode illumination device and method and more specifically to a light emitting diode and driving circuitry integrated into a component module that will retrofit common incandescent lightbulb applications.

BACKGROUND OF THE INVENTION

[0003] Currently, lightbulbs for low power lighting applications such as flashlights are dominated by incandescent lights that use hot filaments to provide radiant energy. The radiation that is emitted by hot filaments is spread over a wide spectral range and much of the energy is wasted owing to emission outside the visible range. Moreover, such filaments must be designed for the specific voltage of operation, e.g., a bulb designed for 2.7 volt (V) operation cannot be used for operation at a higher, 3.6 V level without causing immediate premature failure. Similarly, operating at a lower voltage, such as 2.2 V lowers the light output to unacceptable levels. In addition, wide varieties of low power lightbulb bases have been established over the last hundred years. Even without considering additional application factors, the combination of these two factors alone means that hundreds of distinct lightbulbs must be manufactured in order to meet specific application demands.

[0004] Light emitting diodes (LEDs) have operating advantages with respect to incandescent lights. LEDs can emit light in a narrow range of wavelengths so that a high proportion of the input energy is converted into light emitted within a specific wavelength envelope, resulting in application specificity and high efficiency. Such lights have very long life compared to incandescent lights (50,000 hours vs. 3-30 hrs for incandescent flashlight bulbs). Like incandescent bulbs, LEDs require a specific, narrow operating voltage range, ordinarily from 3.2 V to 4 V. Higher voltage results in premature failure and lower voltage results in little or no light output. Conventional LED illumination devices share high application specificity, resulting in a similarly large number of distinct products as with ordinary incandescent bulbs. This discourages conventional LED use, as retailers must now carry twice the already excessive inventory of the same product. In addition, LED lightbulbs for various voltages are commonly fabricated by incorporating a ballast resistor serving as a current limiter. This technique wastes energy and does not markedly increase the voltage operating range. LED circuits with current and voltage regulation have been utilized in applications such as traffic lights where large numbers of LEDs are packaged together to provide a bright, long lasting and highly efficient lighting. However, in a traffic light application, space is not a limitation, and so fairly complex and bulky electronic circuits have been used to meet these specialized needs.

SUMMARY OF THE INVENTION

[0005] The present invention overcomes the disadvantages and limitations of the prior art by providing a light emitting diode and driving circuitry integrated into a component module that will retrofit common incandescent lightbulb applications. The disclosed embodiments will perform with high efficiency at a wide operating voltage range with a very small size allowing for the incorporation within the envelope and form of existing lightbulb bases. Therefore, a single universal LED light bulb module can be used to replace the dozens of conventional LED and incandescent lights currently being used. The electronic circuitries used to drive the LEDs are extremely compact and consequently can be incorporated in nearly any standard bulb base. Because the operating voltage of these circuits is so wide, they are able to effectively draw out the last bit of energy present in a battery pack, providing excellent efficiency and capacity. For example, a 6 V battery pack will still operate the LED at full brightness when it only delivers slightly in excess of 1.5 V; in other words, the batteries are effectively "dead" with respect to conventional light bulbs, but this embodiment still operate as though the batteries were fully charged. In fact, there is little or no change in the light output from 6 V down to approximately 1.5 V, allowing for the use of nearly all the energy available from the battery. In addition, a 3 V battery pack and a 6 V battery pack for example, would use the exact same light bulb as described in this invention, being completely interchangeable.

[0006] The universal LED light bulb module can be driven by a circuit that is either a constant voltage output or a constant current output. The constant current design is preferred since light output is directly proportional to current, and slight differences in the LED manufacture require different operating voltages for a given light output. This constant current circuit is a high frequency, low power dc/dc converter. The high frequency of operation allows components of small size to be used. The essential feature of this circuit is a voltage comparator that regulates the voltage to a specified value to achieve the desired output. An inductor is charged to achieve the desired voltage output in the circuit. In the constant current implementation, a current sensing resistor is used to provide the voltage feedback. Although often designed for DC-to-DC operation in the range discussed, the disclosed constant current circuit can be easily modified to work at higher voltages by using for instance, a zener diode resistor combination, or to operate as an AC/DC converter by adding a rectifier circuit. Other features such as light sensors, pulse circuits etc., can be added to provide additional features such as flashing operation or dimming. Various logic signals can be easily adapted to introduce added functionality to the embodiments. For example, a single activation of a power switch could provide a low output light, a second activation producing a medium output light, a third activation producing a high output light, and a fourth activation shutting off the light. Multiple colored LEDs can also be used to vary the desired colored output.

[0007] An embodiment of the present invention may therefore comprise a universal LED lamp that is capable of replacing incandescent bulbs and that operates at various voltages comprising: a standard bulb base that is adapted to fit into standard bulb sockets; a printed circuit board that is electrically connected to a voltage input contact of the standard bulb base that is capable of fitting in the envelope of the standard bulb base; a driving circuit mounted on the printed circuit board that includes a solid state voltage comparator that regulates the input voltage to maintain an

output voltage at a predetermined constant value within a predetermined range of input voltages that are both above and below the predetermined output voltage; an LED that is electrically connected to the output of the driving circuit and physically connected to the printed circuit board.

[0008] An additional embodiment of the present invention may also comprise a method of producing a universal LED lamp that is capable of replacing incandescent bulbs that operate at various voltages comprising: providing a standard bulb base that is adapted to fit into standard bulb sockets; electrically connecting a printed circuit board to a voltage input contact of the standard bulb base; mounting a driving circuit on the printed circuit board that includes a solid state voltage comparator; regulating the input voltage with the driving circuit to maintain an output voltage at a predetermined constant value within a predetermined range of input voltages that are both above and below the predetermined output voltage; fitting the printed circuit board within the standard bulb base; electrically connecting an LED to the output of the driving circuit; and, physically connecting the LED to the printed circuit board.

[0009] The disclosed embodiments offer the advantage of providing a universal LED light bulb module with long life and high efficiency at a wide operating voltage range with a very small size allowing for the incorporation within the envelope and form of existing lightbulb bases. The LED illumination module has the further advantage over conventional incandescent type bulbs by providing a precise wavelength output envelope, resulting in high efficiency and application specificity. Additionally, the high frequency of operation in the drive circuitry allows components of small size to be used and allows the device to effectively draw out the last bit of energy present in a battery pack. Additional ancillary features that are not currently available in incandescent bulbs such as light sensors, pulse circuits etc., can be added to the drive circuitry to provide additional features to conventional products.

BRIEF DESCRIPTION OF THE DRAWINGS

[0010] In the drawings, **FIG. 1** is a drawing showing a typical embodiment of a universal LED illumination device to retrofit an incandescent lightbulb application.

[0011] **FIG. 2** is a drawing showing a typical embodiment of a universal LED illumination device in relation to an incandescent lightbulb.

[0012] **FIG. 3** is a schematic representation of a DC circuit used for a typical embodiment of a universal LED illumination device.

[0013] **FIG. 4** is a drawing showing a typical embodiment of a universal LED illumination device in relation to an incandescent flashlight bulb application.

[0014] **FIG. 5** is a drawing showing a typical embodiment of a universal LED array illumination device in relation to an incandescent flashlight bulb application.

[0015] **FIG. 6** is a drawing showing a typical embodiment of a universal LED illumination device to retrofit an incandescent lightbulb application.

[0016] **FIG. 7** is a drawing showing a typical embodiment of a universal LED illumination device to retrofit an incandescent lightbulb application.

[0017] **FIG. 8** is a drawing showing a typical embodiment of a universal LED illumination device to retrofit a halogen lightbulb application.

[0018] **FIG. 9** is a drawing showing a typical embodiment of a universal LED illumination device to retrofit a focused beam incandescent flashlight application.

DETAILED DESCRIPTION OF THE INVENTION

[0019] While this invention is susceptible to embodiment in many different forms, there are shown in the drawings and will be described herein in detail specific embodiments thereof with the understanding that the present disclosure is to be considered as an example of the principles of the invention and is not to be limited to the specific embodiments described.

[0020] **FIG. 1** is a drawing showing a typical embodiment of a universal LED illumination device to retrofit an incandescent lightbulb application. As illustrated in **FIG. 1**, an LED illumination device **100** may be made up of an LED lamp **102** that is connected to a printed circuit board **104** by an anode **126** wire at an LED anode connect **108** and a cathode **128** wire and an LED cathode connect **110** located on the printed circuit board **104**. This printed circuit board **104** contains electronic circuitry placed in circuit area **106** and is of small size enabling the printed circuit board **104** to fit within the envelope of a standard bulb base **116**. Electrical connections from the circuit board **104** to the bulb base **116** are made via a V_{in} positive **112** connector in connection with $+V_{in}$ contact **120** on the external distal apex of the bulb base and a Vin negative **114** connector in connection with $-V_{in}$ contact **122** on the side edge of the bulb base **116**. The $+V_{in}$ contact **120** and the $-V_{in}$ contact **122** are isolated from one another by an insulator **118**. The aforementioned configuration allows the LED illumination device **100** to conform to a standard bulb envelope thereby allowing the embodiment to be utilized as a replacement for conventional incandescent bulbs in a variety of applications. This replacement of incandescent lights with LED illumination affords numerous operating advantages. The disclosed LED embodiments are able to emit light in a narrow wavelength range resulting in the bulk of the energy consumed by the device to be emitted as visible light, thereby delivering much higher electrical to optical conversion efficiency than incandescent technology. Although red, green, and blue LEDs can be combined to produce white light, UV emitting LEDs can be used with fluorescing materials to produce white light for general illuminating applications. Such LEDs have very long life compared to incandescent lights (50,000 hours vs. 3-30 hrs for incandescent flashlight bulbs) in addition to the high efficiency of LEDs.

[0021] **FIG. 2** is a drawing showing a typical embodiment of a universal LED illumination device in relation to an incandescent lightbulb. As illustrated in **FIG. 2**, an LED illumination device **200** is contrasted with an incandescent lightbulb **250**. A comparable size and functional relation is demonstrated in the disclosed embodiment of an LED lamp **202** driven by a logic circuit **206** in connection with a standard bulb base **216**, mimicking the envelope of an incandescent bulb **226** with a resistive lighting filament **228** in a standard bulb base **216**. Both designs include a base **216** with $+V_{in}$ contact, **220** and **230**, and $-V_{in}$ contacts **222** and

232 isolated from one another by insulators **218** and **234**. **FIG. 2** further demonstrates the ability of an LED illumination device **200** to retrofit conventional incandescent bulbs in a variety of applications.

[**0022**] **FIG. 3** is a schematic representation of a DC circuit used for a typical embodiment of a universal LED illumination device. A high frequency, low power DC-to-DC converter circuit is utilized to drive the LED **302** in the disclosed embodiment illustrated in **FIG. 3**. The high frequency of operation allows components of small size to be used. A positive voltage source is introduced at $+V_{in}$ **312** and branched to a capacitor C**1316** and inductor L**1320** and to two inputs (V_{in} **324** and EN **326**) of a switching circuit **304**. The solid-state switching circuit **304** regulates the input voltage V_{in} **324** to a specified value to achieve a switched output at SW **328** by receiving an enable signal EN **326** branched from V_{in} **324**. The inductor L**1320** is charged during the ON cycle phase of SW **328** and discharges in the OFF cycle phase to achieve the desired switched voltage output driving a Schottky diode D**1306** that in turn drives the anode side **308** of the output LED **302** and capacitor C**3318** which is terminated to ground. This Schottky diode D**1306** allows the current to flow in only one direction to the anode side **308** of the LED **302** via SW **328**. The Schottky diode D**1306** also assures that there is a quantity of rectification of the AC signal flowing through the circuit so that the LED only sees half of the AC cycle, effectively acting as a DC signal. Capacitor C**3318** becomes a charge reservoir, averaging out what would otherwise be a sinusoidally varying voltage with one half of the sine wave missing.

[**0023**] The cathode side **310** of the LED **302** is pass through ground via R-**4322** and branched to the feedback FB pin **332** of the switching circuit **304** through resistor R**3320**. The FB pin **332** acts as half of an operational amplifier that is comparing the voltage at R-**4322** above ground, to a reference voltage, (i.e., 1.23V). When the voltage at R-**4322** reaches its reference voltage, the switching circuit **304** stops supplying current. The FB pin **332** therefore serves as feedback reference within the switching circuit **304**, determining the current values by comparing a feedback voltage to its internal reference and deciding whether more or less charge is needed, thereby regulating the circuit current. $-V_{in}$ **314**, capacitors C**1316** and C**3318**, resistor R**4322** and the ground terminal **330** of the switching circuit **304** are all terminated to ground.

[**0024**] In a constant current implementation, a current sense resistor is used to provide the voltage feedback. An integrated circuit of small size, Texas Instruments TPS61040 or TPS61041 is suitable for this purpose. Although designed for DC-to-DC operation in a suitable voltage range, the circuit can be easily modified to work at higher voltages by using a zener diode resistor combination, or to operate as an AC-to-DC converter by adding a rectifier circuit. Additional operational features such as light sensors, pulse circuits etc., can be added to provide for flashing operation or dimming. Multiple colored LEDs can be used to vary the desired colored output. Although only one LED is shown, several LEDs can be combined in a series circuit, parallel circuit or series-parallel circuit up to the limitations of the IC used. An appropriate LED may be chosen for use in this circuit to suit the particular application and sized to closely match the bulb dimensions and intensities of conventional lamps. Hence, by combining this circuit on a small form factor circuit board into an existing bulb base, together with the LED, a product can be obtained that has nearly identical or even superior form, fit, and function to traditional incandescent lamps. The circuit shown in **FIG. 3** can be implemented in either a constant voltage output design or a constant current output design. The constant current design has advantages since light output is directly proportional to current, whereas slight variations in the LED manufacture require different operating voltages for a specific light output.

[**0025**] Because the circuit shown in **FIG. 3** can be extremely compact, it can be incorporated in nearly any standard bulb base. With this implementation, the operating input voltage of the circuit is very wide (at least 1.5 V to 7 Volts), effectively drawing nearly all of the energy present in the battery pack, thereby making excellent utilization of available power. The disclosed circuit will allow the LED light bulb to maintain constant light output under a wide range of voltage input. For example, a 6 Volt battery pack will still operate the LED, at full brightness, when it only delivers slightly in excess of 1.5 V. In other words, when the batteries are effectively "dead" with respect to conventional light bulbs, this embodiment will continue to operate as though the batteries were at full capacity. There is little or no change in the light output from 6 Volts down to approximately 1.5 Volts, allowing for the use of nearly all the energy available from the battery. In addition, a 3 Volt battery pack and a 6 Volt battery pack for example, would use exactly the same light bulb, being completely interchangeable.

[**0026**] The circuit detailed in **FIG. 3** can be readily expanded or combined with additional circuitry to introduce a variety of additional functions to the device. These functions may include but are not limited to: a dimming feature that allows the bulb to be used at one or more brightness levels; brightness levels being used as a power saving mode or as an indication of low battery or deficient external power; an automatic shut-off timer function; light output color changes; variable light beam direction; backup power supply; combination of incandescent and LED lighting; voice activation; or the like.

[**0027**] **FIG. 4** is a drawing showing a typical embodiment of a universal LED illumination device in relation to an incandescent flashlight bulb application. As illustrated in **FIG. 4**, a flashlight body **422** containing a standard incandescent bulb **430** with a standard bulb base **428** is fixed within a reflector **420** to reflect and project a beam of light through reflector cover **424**. This same configuration can be utilized with an LED lamp **402** as the light source. In, this application, a flashlight body **412** contains an LED lamp **402** with a standard bulb base **428**. A circuit board **404** containing the necessary driver circuit and electronics for the LED lamp **402** is housed within this standard bulb base **428** thereby providing an overall envelope which is nearly identical to it in the incandescent bulb. The LED lamp **402** is similarly fixed within a reflector **410** to reflect and project a beam of light through reflector cover **414**. This embodiment enables a single circuit and lighting device to be used with a variety of bulb bases thereby affording is an economic advantage both in manufacturing as well as to the user who may transfer the product to more than one application or stock one kind of bulb for multiple applications. This circuit is designed to adapt to various AC or DC power sources and accommodate the different voltages that may be present.

[0028] **FIG. 5** is a drawing showing a typical embodiment of a universal LED array illumination device in relation to an incandescent flashlight bulb application. As illustrated in **FIG. 5**, a flashlight body **522** containing a standard incandescent bulb **530** with a standard bulb base **528** is fixed within a reflector **520** to reflect and project a beam of light through reflector cover **524**. This same configuration can be utilized with an LED array **502** of lamps as the light source. In, this application, a flashlight body **512** contains an LED array **502** of lamps while still utilizing a standard bulb base **528**. The LED array **502** can be mounted on a flat surface, such as a printed circuit (PC) board **508**. In this embodiment, a PC board is equipped on its top surface with one or more LEDs connected in either a series or parallel circuit. This top surface may (or may not) contain electronic components such as ICs, resistors, capacitors and the like. The bottom surface may also contain circuitry and its associated electronic components such as a DC-to-DC converter circuit **504** and may contain an electrical connector which mates to a complimentary connector mounted within a standard bulb base **528**. The bulb base **528** in this example is used to make electrical connections to an electrical source (not shown) and deliver the power to the wafer-shaped PC board **508**. This DC-to-DC converter circuit **504** is designed to adapt to various power sources and accommodate the different voltages that may be present. Similar circuits may be utilized to allow the aforementioned embodiments to be powered by either AC or DC source current. The LED array **502** is similarly fixed within a reflector **510** to reflect and project a beam of light through reflector cover **514**. This embodiment enables a single circuit and lighting device to be used with a variety of bulb bases thereby affording is an economic advantage both in manufacturing as well as to the user who may transfer the product to more than one application. This single circuit is designed to adapt to various AC or DC power sources and accommodate the different voltages that may be present.

[0029] **FIG. 6** is a drawing showing a typical embodiment of a universal LED illumination device to retrofit an incandescent lightbulb application. As illustrated in **FIG. 6**, an LED **602** is mounted to a wafer PC board **604** such that the LED **602** will project light outward and approximately perpendicular to the top surface of the PC board **604**. The LED **602** is mounted to the PC board **604** by an anode **626** and cathode **628** attachments on the top surface. The converter and logic circuit **606** can be mounted on either or both sides of the wafer PC board **604** and are shown in **FIG. 6** on the bottom surface. This LED **602** and associated converter and logic circuit **606** are connected to a 3-pin connector **612** that facilitates an easy connection to a standard bulb base **616**. This connection is made through a single anode **626** connector located in the center of the 3-pin connector **612**, and two cathode **628** connectors that have been bifurcated from the LED **602** and placed lateral to the anode **626**. This cathode geometry allows the LED and circuitry module to be placed into connection in either left or right orientation within the 3-pin connector **612**.

[0030] **FIG. 7** is a drawing showing a typical embodiment of a universal LED illumination device to retrofit an incandescent lightbulb application. As illustrated in **FIG. 7**, a set of LEDs **702** is mounted in a triangular pattern to a wafer PC board **704** in either a series or parallel configuration such that the LEDs **702** will project light outward and approximately perpendicular to the top surface of the PC board **704**. The LEDs **702** are mounted to the PC board **704** by an anode **726** and cathode **728** attachments for each LED **702** on the top surface. The converter and logic circuit **706** can be mounted on either or both sides of the wafer PC board **704** and are shown in **FIG. 7** on the bottom surface. These LEDs **702** and associated converter and logic circuit **706** are connected to a 3-pin connector **712** that facilitates an easy connection to a standard bulb base **716**. This connection is made from each LED through to a single anode **726** connector located in the center of the 3-pin connector **712**, and two cathode **728** connectors that have been bifurcated from each LED **702** and placed lateral to the anode **726**. This cathode geometry allows the LED and circuitry module to be placed into connection in either left or right orientation within the 3-pin connector **712**.

[0031] **FIG. 8** is a drawing showing a typical embodiment of a universal LED illumination device to retrofit a halogen lightbulb application. As illustrated in **FIG. 8**, a group of LEDs **802** is mounted to a PC board **804** such that the LEDs **802** will project light outward and perpendicular to the top surface of the PC board **804** to produce an LED halogen replacement bulb **800**. The converter and logic circuit **808** can be mounted on either or both sides of the wafer PC board **804** and are shown in **FIG. 8** on the top surface. This top surface can be coated with a reflective surface **812** to increase light output intensity by reflecting light otherwise lost and enhance heat dissipation of the LEDs and circuitry. These LEDs **802** and associated converter and logic circuit **808** are made to connect employing "bump ends"**806** that adapt the PC board to fit and electrically connect within halogen bulb fixtures. The large area of PC board **804** space additionally allows for additional circuitry **810** to be readily added to either side of the described embodiment.

[0032] **FIG. 9** is a drawing showing a typical embodiment of a universal LED illumination device to retrofit a focused beam incandescent flashlight application. In particular products such as flashlights, a reflective parabolic reflector is an integral part of the product's feature set. In certain applications, the reflective reflector can be moved up and down by rotating a portion of the flashlight's barrel. When this is done, the reflector moves up and down thereby moving the bulb above, through and below the prime focus of the parabolic reflector. This has the effect of focusing or dispersing the light beam to give either a narrow spot or broad beam. Because LEDs usually contain focusing optics, a forward mounting as described above is usually an adequate implementation. However, to take advantage of unique features that may already be present in existing applications, an aftermarket implementation that addresses these specific features and associated needs is necessary.

[0033] As illustrated in **FIG. 9**, a flashlight body **922** containing a standard incandescent bulb **930** with a standard bulb base **928** is fixed within a reflective parabolic reflector **920** to reflect and project a beam of light through reflector cover **924**. The reflector **920** acts to reflect the light emanating from the filament in a standard incandescent bulb **930** to a focused light beam **940**. A similar configuration can be utilized where an LED replacement bulb is designed to allow light to emanate from one or more LEDs **902** mounted to a PC board **908**. In this embodiment, the planar axis of the PC board **908** is mounted within a standard bulb base **928** and positioned parallel to a focused beam of light **950**. As illustrated in **FIG. 9**, two LEDs **902** are used, one each on

either side of a metal core PC board **908**. The LEDs **902** in this embodiment send there light directly towards the surface of the parabolic reflector **910** and project as a focused light beam **950** through reflector cover **914**.

[**0034**] The LEDs **902** are positioned such that they are in the same position relative to the focal point on the parabolic reflector **910** as the filament is in the incandescent bulb **930** it replaces. In this way, the focusing/defocusing feature works as it was intended to since the light is emitted either above or below the prime focus. Hence, both the user and the manufacturer can employ this product and gain the advantages of high efficiency and long life of the LEDs without losing the optical features of the product. Either surface of the PC board **908** may also contain circuitry and associated electronic components such as a DC-to-DC converter circuit **904** and may contain an electrical connector that mates to a complimentary connector (not shown) mounted within a standard bulb base **928**. The bulb base **928** in this example is used to make electrical connections to an electrical power source (not shown) and deliver the power to the PC board **908**.

[**0035**] Because the generation of excessive heat is a great detriment to the LED and associated circuitry, additional elements can easily be added to the disclosed embodiments such as the incorporation heat sink devices **920** or materials in or on the PC board. A metal core PC board **908** is shown in this embodiment to demonstrate the ease in which heat dissipation techniques can be adapted to the aforementioned embodiments.

[**0036**] **FIG. 10** is a schematic representation of a DC circuit used for a typical embodiment of a universal LED illumination device. Although the circuit of **FIG. 3** is well suited for constant current operation of low power LEDs where the current required is on the order of 20 mA, the sense resistor R**4322** in that circuit dissipates power that may be less than optimal at higher current levels. An alternative higher current, high frequency, DC-to-DC converter circuit that generates a constant power output, ideal for higher current applications, is utilized to drive the LED **1002** in the disclosed embodiment illustrated in **FIG. 10**.

[**0037**] A positive voltage source is introduced at $+V_{in}$ **1012** and branched to an inductor L**11020** and to inputs V_{CC} **1024** of an IC driver circuit U**11004** (i.e., Zetex ZXSC310). The solid-state driver circuit **1004** regulates the input voltage V_{CC} **1024** to a specified value to achieve a switched output at V_{Drive} **1028**, which in turn drives an external transistor Q**11034**. The inductor L**11020** is charged during the ON cycle phase of Q**11034** and discharges in the OFF cycle phase to achieve the desired switched voltage output driving a Schottky diode D**11006** that in turn drives the anode side **1008** of the output LED **1002** and capacitor C**101018** which is terminated to ground. This Schottky diode D**11006** allows the current to flow in only one direction to the anode side **1008** of the LED **1002** via Q**11034**. The Schottky diode D**11006** also assures that there is a quantity of rectification of the AC signal flowing through the circuit so that the LED only sees half of the AC cycle, effectively acting as a DC signal. Capacitor C**11018** becomes a charge reservoir, averaging out what would otherwise be a sinusoidally varying voltage with one half of the sine wave missing. A low value sensing resistor, R**11020** is connected to the ON phase of external transistor Q**11034** and minimizes power dissipation. The transistor switches ON and allows current to flow through R**11020**, where the voltage drop provides the necessary current sense input to the current sense pin **1032** of the IC U**11004**.

[**0038**] The cathode side **1010** of the LED **1002** is pass through ground via R-**41022** and branched to ground. When the current at R**11020** reaches its reference current, the comparator **1004** stops supplying current. The current sense pin **1032** therefore serves as feedback reference within the driver circuit **1004**, determining the current values by comparing a feedback current to its internal reference and deciding whether more or less charge is needed, thereby regulating the circuit current. $-V_{in}$ **1014**, capacitors C**11018** and, resistor R**11020** and the ground terminal **1030** of the driver circuit **1004** are all terminated to ground.

[**0039**] **FIG. 11** is a schematic representation of an AC circuit used for a typical embodiment of a universal LED illumination device. Although the circuits of **FIG. 3** and **FIG. 10** are well suited for DC operation of low power LEDs, **FIG. 11** illustrates a typical AC circuit suitable for driving a universal LED illumination device. In the case of bulbs intended for AC applications, a method can be used to rectify the AC voltage to produce a DC signal as referred to above. However, circuits that merely rectify the AC voltage are best suited for use with batteries and when the DC voltage available is less than or equal to the operating voltage of the array of one or more LEDs. For example, with halogen bulbs, a 14V AC source is often used as the power source and is excessive for one or two LEDs. In this instance, an AC voltage regulator may be used in conjunction with the LED that utilizes the inherent property of rectification of an LED that will generally withstand 5 V in reverse bias.

[**0040**] An alternating current voltage source is introduced to two IC regulator circuits **1104** and **1106** (i.e., National LM317) at V_{in} **1024** and V_{in} **1034**. The solid-state regulator circuits **1104** and **1106** regulate the positive and negative going potential using the internal voltage reference of the IC and chop the sinusoidal input from, for example 14V peak-to-peak (P-P) to 3.6 V P-P to set the voltage output at V_{out} **1028** and V_{out} **1038**. Chopped outputs V_{out} **1028** and V_{out} **1038** feed through parallel ladder path, the first rung containing R**11120** and R**21130** in series, the second rung containing R**31140** and R**41150** in series, and the third rung containing an LED **1102**. The first rung is connected between R**11120** and R**21130** to a comparator input ADJ **1132** on regulator circuit **1104** and the second rung is connected between R**31140** and R**41150** to a comparator input ADJ **1142** on regulator circuit **1106**. These comparator inputs ADJ **1132** and ADJ **1142** are used as a feedback loop to compare the external voltage reference to an internal voltage reference V_{ref} to set the voltage output V_{out} **1028** and V_{out} **1038**.

[**0041**] In this configuration, the ratio of R**3**/R**4** and R**1**/R**2** determine the positive and negative voltage maximum. Here, the 14 V AC peak-to-peak signal is reduced to nearly a square wave with a 3.6V P-P max being used drive the LED **1102**, using the LED **1102** to rectify the signal.

[**0042**] $V_{out}+=V_{ref}(1.25\ V)\ [1+(R1/R2)]$ is the positive going voltage maximum and

[**0043**] $V_{out}-=V_{ref}(1.25V)\ [1+(R3/R4)]$ is the negative going voltage maximum.

[0044] Generally, the V_{out}—would be kept within a range well tolerated by the reverse characteristics of the LED **1102**.

The invention claimed is:

1. An illuminating device that is capable of replacing an incandescent light bulb comprising:

a standard bulb power connector equivalent to the base of a standard incandescent bulb which the device can replace;

at least one light emitter;

a driving circuit which is electrically connected to the power connector, electrically connected to the light emitter, is compact enough to fit into the volume envelope of the incandescent bulb, consumes power more efficiently than the incandescent bulb, and provides substantially constant illumination over an input voltage range with a maximum-to-minimum ratio of 2 to 1 or more; and

a module incorporating the driving circuit and physically attached to the power connector and to the light emitter, is common to more than one type of bulb power connector;

2. The device of claim 1, wherein the light emitter is a solid state light emitting device.

3. The device of claim 2, wherein the solid state light emitting device is a light emitting diode.

4. The device of claim 1, wherein at least one light emitter is adapted to direct at least 50% of its light onto a reflector.

5. The device of claim 1, wherein the driving circuit operates at a frequency high enough to allow the circuit to be small enough to fit inside the envelope of the incandescent bulb.

6. The device of claim 1, wherein the driving circuit provides a substantially constant current through the light emitter.

7. The device of claim 1, wherein the driving circuit provides a substantially constant voltage for the light emitter.

8. The device of claim 1, wherein the module is mounted on a printed circuit board.

9. The device of claim 1, which further comprises a means to select the level of illumination output by the light emitter.

10. The device of claim 1, which further comprises a means to select the color of illumination output by the device.

11. The device of claim 1, which further comprises a circuit to detect the level of illumination and adjust the output of the light emitter accordingly.

12. The device of claim 1, which further comprises a circuit to pulse the light.

13. The device of claim 1, wherein the power source may be a battery pack of one or more batteries.

14. The device of claim 13, wherein the driver circuitry can utilize significantly more of the available battery energy than can the incandescent bulb.

15. The device of claim 13, wherein the same driver circuitry can operate the same light emitter with substantially the same illumination in configurations utilizing different numbers of batteries connected in series.

16. The device of claim 1, wherein the power source is direct current.

17. The device of claim 1, wherein the power source is alternating current.

18. The device of claim 1, wherein the power connector is a screw-in base.

19. The device of claim 1, wherein the power connector is a bayonet base.

20. The device of claim 1, wherein the power connector comprises 2 or more pins.

21. The device of claim 1, wherein the power connector comprises 2 or more wires.

22. The device of claim 1, further comprising a heat sink.

23. An improved illuminating device comprising

a standard bulb power connector equivalent to the power connector of a conventional incandescent bulb, which the improved device is capable of replacing;

at least one light emitter, which may be a light emitting diode; and

a driver circuit electrically connected to the light emitter and to the power connector;

where said improvement comprises

an improved circuit which is compact enough to fit into the volume envelope of the standard incandescent bulb, consumes power more efficiently than the incandescent bulb, and provides substantially constant illumination over an input voltage range with a maximum-to-minimum ratio of 2 to 1 or more; and

a module incorporating the driving circuit and physically attached to the power connector and to the light emitter.

24. The device of claim 23, where in the light emitter is adapted to direct at least 50% of its light onto a reflector.

25. The device of claim 23, wherein the improved circuit operates at a frequency high enough to allow the circuit to be small enough to fit inside the envelope of the incandescent bulb.

26. The device of claim 23, wherein the improved circuit provides a constant current through the light emitter.

27. The device of claim 23, wherein the driving circuit provides a constant voltage for the light emitter.

28. The device of claim 23, wherein the module comprises a printed circuit board.

29. The device of claim 23, which further comprises a means to select the level of illumination output by the light emitter.

30. The device of claim 23, which further comprises a means to select the color of illumination output by the device.

31. The device of claim 23, which further comprises a means to detect the level of illumination and adjust the output of the light emitter accordingly.

32. The device of claim 23, which further comprises a means to pulse the light.

33. The device of claim 23, wherein the power source may be a battery pack of one or more batteries.

34. The device of claim 33, wherein the driver circuitry can utilize significantly more of the available battery energy than can the incandescent bulb.

35. The device of claim 33, wherein the same driver circuitry can operate the same light emitter with substantially the same illumination in configurations utilizing different numbers of batteries connected in series.

36. The device of claim 23, wherein the power source is direct current.

37. The device of claim 23, wherein the power source is alternating current.

38. The device of claim 23, further comprising a heat sink.

39. A method of providing illumination capable of replacing the illumination from an incandescent light bulb comprising steps of:

providing a standard light bulb power connection equivalent to the power connection of the incandescent bulb which the device replaces;

electrically connecting a circuit module to the input power contacts of the power connector;

electrically connecting a light emitter to the output of the module;

physically connecting the light emitter to the module;

physically connecting the module to the power connector;

fitting the module and the light emitter into the volume envelope of the incandescent bulb;

regulating the power usage of the module to maintain a substantially constant illumination from the light emitter, while the source voltage may be in a range with a maximum-to-minimum ratio of at least 2 to 1.

40. The method of claim 39, wherein the input power is supplied by one or more batteries.

41. The method of claim 39, wherein the circuit module utilizes substantially more available battery energy than can the incandescent bulb.

42. The method of claim 39, additionally comprising adapting the light emitter to direct at least 50% of its light onto a reflector.

43. The method of claim 39, wherein the power connection is a screw-in base.

44. The method of claim 39, wherein the power connection is a bayonet base.

45. The method of claim 39, wherein the power connection comprises 2 or more pins.

46. The method of claim 39, wherein the power connection comprises 2 or more wires.

47. The method of claim 39, wherein the light emitter is a solid state light emitting device.

48. The method of claim 45, wherein the solid state light emitting device is a light emitting diode.

49. The method of claim 39, further comprising conveying excess heat away from the circuit module and light emitter.

* * * * *