UNITED STATES PATENT AND TRADEMARK OFFICE

BEFORE THE PATENT TRIAL AND APPEAL BOARD

SAMSUNG ELECTRONICS CO., LTD.
Petitioner

v.

MOJO MOBILITY INC.
Patent Owner

Patent No. 11,201,500

PETITION FOR *INTER PARTES* REVIEW
OF U.S. PATENT NO. 11,201,500

TABLE OF CONTENTS

I. INTRODUCTION 1

II. MANDATORY NOTICES 1

III. PAYMENT OF FEES 2

IV. GROUNDS FOR STANDING 2

V. PRECISE RELIEF REQUESTED AND GROUNDS 2

VI. LEVEL OF ORDINARY SKILL 4

VII. THE '500 PATENT 4

VIII. CLAIM CONSTRUCTION 5

IX. DETAILED EXPLANATION OF GROUNDS 6

A. Ground 1: Claims 1, 3, 9, and 12 are obvious over *Okada* in view of *Odendaal*, *Berghegger*, and *Black* 6

1. Claim 1 6

2. Claim 3 64

3. Claim 9 65

4. Claim 12 68

B. Ground 2: Claim 11 is obvious over *Okada* in view of *Odendaal*, *Berghegger*, *Black*, and *Shima* 73

1. Claim 11 73

C. Ground 3: Claims 12-13 are obvious over *Okada* in view of *Odendaal*, *Berghegger*, *Black*, and *Takagi* 76

1. Claim 12 76

2. Claim 13 77

D. Ground 4: Claim 20 is obvious over *Okada* in view of *Odendaal*, *Berghegger*, *Black*, and *Chen* 81

1. Claim 20 81

X. DISCRETIONARY DENIAL IS NOT APPROPRIATE 85

XI. CONCLUSION 89

LIST OF EXHIBITS

Ex. 1001	U.S. Patent No. 11,201,500
Ex. 1002	Declaration of R. Jacob Baker, Ph.D., P.E.
Ex. 1003	Curriculum Vitae of R. Jacob Baker, Ph.D., P.E.
Ex. 1004	Prosecution History of U.S. Patent No. 11,201,500
Ex. 1005	Translation of Japanese Patent Application Publication No. 2006-141170A ("*Okada*")[1]
Ex. 1006	U.S. Patent No. 6,912,137 ("*Berghegger*")
Ex. 1007	U.S. Patent Application Publication No. 2006/0145660A1 ("*Black*")
Ex. 1008	U.S. Patent No. 6,960,968 ("*Odendaal*")
Ex. 1009	U.S. Patent No. 6,489,745 ("*Koreis*")
Ex. 1010	U.S. Patent No. 6,366,817 ("*Kung*")
Ex. 1011	Physics, Henry Semat et al., Rinehart & Co., Inc., 1958, Chapters 29-32 ("*Semat*")
Ex. 1012	U.S. Patent No. 5,702,431 ("*Wang*")
Ex. 1013	International Patent Application Publication No. WO1996040367 ("*WangII*")
Ex. 1014	Handbook of Radio and Wireless Technology, Stan Gibilisco, McGraw-Hill, 1999 ("*Gibilisco*")
Ex. 1015	U.S. Patent No. 4,942,352 ("*Sano*")

[1] Exhibit 1005 includes the original Japanese version and a certified English translation. Citations to *Okada* are to the English translation.

Ex. 1016	Fundamentals of Electric Circuits, 2d., Charles Alexander et al., McGraw-Hill, 2004 ("*Alexander*")
Ex. 1017	International Patent Application Publication No. WO1994/18683 ("*Koehler*")
Ex. 1018	Mojo Mobility's Infringement Chart for U.S. Patent No. 11,201,500 (Ex. 3) accompanying Mojo Mobility's Infringement Contentions in *Mojo Mobility Inc. v. Samsung Elecs. Co., Ltd.*, No. 2:22-cv-00398 (E.D. Tx.) (February 28, 2023)
Ex. 1019	U.S. Patent Application Publication No. 2005/0068019 ("*Nakamura*")
Ex. 1020	U.S. Patent Application Publication No. 2007/0109708 ("*Hussman*")
Ex. 1021	U.S. Patent Application Publication No. 2003/0210106 ("*Cheng*")
Ex. 1022	Mojo Mobility's Infringement Contentions in *Mojo Mobility Inc. v. Samsung Elecs. Co., Ltd.*, No. 2:22-cv-00398 (E.D. Tx.) (February 28, 2023)
Ex. 1023	U.S. Patent Application Publication No. 2004/0201988 ("*Allen*")
Ex. 1024	U.S. Patent No. 7,378,817 ("*Calhoon-817*")
Ex. 1025	International Patent Application Publication No. WO2003/096361 ("*Cheng*")
Ex. 1026	International Patent Application Publication No. WO2004/038888 ("*ChengII*")
Ex. 1027	Spiral Inductor Design for Quality Factor, Sang-Gug Lee et al., Journal of Semiconductor Technology and Science, Vol. 2. No. 1, March 2002 ("*Lee*")
Ex. 1028	U.S. Patent Application Publication No. 2001/0055207 ("*Barbeau*")
Ex. 1029	AN710 Antenna Circuit Design for RFID Applications
Ex. 1030	U.S. Patent No. 6,606,247 ("*Credelle*")

Ex. 1031	RESERVED
Ex. 1032	U.S. Patent No. 5,808,587 ("*Shima*")
Ex. 1033	U.S. Patent Application Publication No. 2005/0134213A1 ("*Takagi*")
Ex. 1034	RESERVED
Ex. 1035	U.S. Patent Application Publication No. 2005/0270745A1 ("*Chen*")
Ex. 1036	International Patent Application Publication No. WO2003/105308A1 ("*Hui*")
Ex. 1037	U.S. Patent No. 5,780,992 ("*Beard-1*")
Ex. 1038	RESERVED
Ex. 1039	U.S. Patent No. 5,631,539 ("*Beard-2*")
Ex. 1040	U.S. Patent Application Publication No. 2007/0072474A1 ("*Beasley*")
Ex. 1041	RESERVED
Ex. 1042	U.S. Patent No. 8,005,547 ("*Forsberg*")
Ex. 1043	U.S. Patent No. 7,791,311 ("*Sagoo*")
Ex. 1044	U.S. Patent Application Publication No. 2007/0145830A1 ("*Lee-II*")
Ex. 1045	U.S. Patent Application Publication No. 2007/0267718A1 ("*Lee-Via*")
Ex. 1046	RESERVED
Ex. 1047	U.S. Patent Application Publication No. 2006/0202665 ("*Hsu*")
Ex. 1048	International Patent Application Publication No. WO2009155000A2 ("*Lin*")
Ex. 1049	U.S. Patent Application Publication No. 2008/0067874 ("*Tseng*")
Ex. 1050	U.S. Patent No. 9,356,473 ("*Ghovanloo*")

Ex. 1051	RESERVED
Ex. 1052	RESERVED
Ex. 1053	RESERVED
Ex. 1054	U.S. Patent Application Publication No. 2011/0193484 ("*Harbers*")
Ex. 1055	U.S. Patent Application Publication No. 2005/0057187 ("*Catalano*")
Ex. 1056	U.S. Patent No. 6,459,383 ("*Delatorre*")
Ex. 1057	International Patent Application Publication No. WO1999050806A1 ("*Cunningham*")
Ex. 1058	International Patent Application Publication No. WO2004026129A1 ("*Due-Hansen*")
Ex. 1059	Watson, J., Mastering Electronics, Third Ed., McGraw-Hill, Inc. (1990) ("*Watson*")
Ex. 1060	Sedra, A., *et al.*, Microelectronic Circuits, Fourth Ed., Oxford University Press (1998) ("*Sedra*")
Ex. 1061	GB Patent Application Publication No. 2202414 ("*Logan*")
Ex. 1062	U.S. Patent No. 7,226,442 ("*Sheppard*")
Ex. 1063	ATMEL e5530 Data Sheet (2002)
Ex. 1064	Memorandum from Director Vidal (June 21, 2022)
Ex. 1065	Federal Court Management Statistics (December 2022)
Ex. 1066	Docket Control Order of March 28, 2023, *Mojo Mobility Inc. v. Samsung Elecs. Co., Ltd.*, No. 2:22-cv-00398 (E.D. Tex.)

I. INTRODUCTION

Samsung Electronics Co., Ltd. ("Petitioner") requests *inter partes* review of claims 1, 3, 9, 11-13, 20 ("challenged claims") of U.S. Patent No. 11,201,500 ("'500 patent") (Ex. 1001) assigned to Mojo Mobility Inc. ("PO"). For the reasons below, the challenged claims should be found unpatentable and canceled.

II. MANDATORY NOTICES

Real Parties-in-Interest: Petitioner identifies the following as the real parties-in-interest: Samsung Electronics Co., Ltd., and Samsung Electronics America, Inc.

Related Matter: The '500 patent is at issue in the following matter(s):

- *Mojo Mobility Inc. v. Samsung Electronics Co., Ltd.*, No. 2-22-cv-00398 (E.D. Tex.) (asserting the '500 patent and also U.S. Patent Nos. 9,577,440, 11,292,349, 11,316,371, 7,948,208, 11,342,777, and 11,462,942) ("Texas Litigation").
- Petitioner is filing concurrently herewith petitions for *inter partes* review challenging other claims of the '500 patent.

The '500 patent originates from U.S. Patent Application No. 16/055,109, filed on August 5, 2018, which is a continuation or continuation-in-part of a sequence of applications dated as early as Jan. 30, 2007. (Ex. 1001, Cover.) The '500 patent also lists multiple provisional applications dated as early as Jan. 31, 2006. (*Id.*)

Counsel and Service Information: Lead counsel: Joseph E. Palys (Reg. No. 46,508), and Backup counsel are (1) Naveen Modi (Reg. No. 46,224), (2) Howard Herr (*pro hac vice* admission to be requested). Service information is Paul Hastings LLP, 2050 M St., Washington, D.C., 20036, Tel.: 202.551.1700, Fax: 202.551.1705, email: PH-Samsung-MojoMobility-IPR@paulhastings.com. Petitioner consents to electronic service.

III. PAYMENT OF FEES

The PTO is authorized to charge any fees due to Deposit Account No. 50-2613.

IV. GROUNDS FOR STANDING

Petitioner certifies that the ’500 patent is available for review and Petitioner is not barred/estopped from requesting review on the identified grounds.

V. PRECISE RELIEF REQUESTED AND GROUNDS

The challenged claims should be canceled as unpatentable based on the following grounds:

Ground 1: Claims 1, 3, 9, and 12 are unpatentable under pre-AIA 35 U.S.C. § 103(a) as being obvious over *Okada*, *Odendaal*, *Berghegger*, *Black*;

Ground 2: Claim 11 is unpatentable under pre-AIA 35 U.S.C. § 103(a) as being obvious over *Okada*, *Odendaal*, *Berghegger*, *Black*, and *Shima*;

Ground 3: Claims 12-13 are unpatentable under pre-AIA 35 U.S.C. § 103(a) as being obvious over *Okada*, *Odendaal*, *Berghegger*, *Black*, and *Takagi*;

Ground 4: Claim 20 is unpatentable under pre-AIA 35 U.S.C. § 103(a) as being obvious over *Okada*, *Odendaal*, *Berghegger*, *Black*, and *Chen*.

In the Texas Litigation, PO identified the following priority dates for the challenged claims (and possibly up to three months earlier):

(a) 12/5/2006: claims 1, 12-13;

(b) 7/30/2007: claims 3, 9, 11;

(c) 4/7/2008: claim 20.

(Ex. 1022, 6-8.) Without conceding such dates are appropriate, Petitioner assumes for this proceeding those are the effective date(s) for the challenged claims. The asserted prior art herein qualifies as prior art at least under the following sections of pre-AIA 35 U.S.C. (depending on the priority dates above):

Okada (published: 6/2/2006)	§102(a)
Odendaal (filed: 6/26/2002; issued: 11/1/2005)	§§102(a), 102(e)
Black (filed: 12/8/2005; published: 7/6/2006)	
Berghegger (issued: 6/28/2005)	§102(b)
Shima (issued: 9/15/1998)	
Takagi (published: 6/23/2005)	

Chen (filed: 10/12/2004; issued: 12/8/2005)	§§102(b), 102(e)

None of these references were considered during prosecution. (*See* §X; Ex. 1004.)

VI. LEVEL OF ORDINARY SKILL

A person of ordinary skill in the art as of the claimed priority date of the '500 patent ("POSITA") would have had at least a master's degree in electrical engineering, or a similar discipline, and two or more years of experience with wireless charging systems, including, for example, inductive power transfer systems. (Ex. 1002, ¶¶20-21.)[2] More education can supplement practical experience and vice versa. (*Id.*)

VII. THE '500 PATENT

During prosecution, the applicant replaced the rejected claims (Ex. 1004, 484-493, 414-423) with new ones, which were subsequently allowed without rejections (*id.*, 186-193 (NOA), 244-249, 384-406). The examiner alleged the art did not "teach or suggest" the system comprising limitations 1(f), 1(i)-1(l). (*Id.*, 191-192; §IX.) However, as demonstrated below, those features, and the others, are a

[2] Petitioner submits the declaration of R. Jacob Baker, Ph.D., P.E. (Ex. 1002), an expert in the field of the '500 patent. (Ex. 1002, ¶¶1-13; Ex. 1003.)

compilation of technologies/techniques known in the art. *See In re Gorman*, 933 F.2d 982, 986 (Fed. Cir. 1991). (§IX; Ex. 1002, ¶¶22-67, 69-259; Exs. 1005-1017, 1019-1021, 1023-1030, 1032-1033, 1035-1037, 1039-1040, 1042-1045, 1047-1050, 1054-1063.)

VIII. CLAIM CONSTRUCTION

The Board only construes the claims when necessary to resolve the underlying controversy. *Toyota Motor Corp. v. Cellport Systems, Inc.*, IPR2015-00633, Paper No. 11 at 16 (Aug. 14, 2015). For purposes of this proceeding, Petitioner believes that no special constructions are necessary to assess whether the challenged claims are unpatentable over the asserted prior art.[3] (Ex. 1002, ¶68.)

[3] Petitioner reserves all rights to raise claim construction and other arguments (e.g., §112, etc.) in district court as relevant to those proceedings. *See, e.g.*, *Target Corp. v. Proxicom Wireless, LLC*, IPR2020-00904, Paper 11 at 11–13 (Nov. 10, 2020). A comparison of the claims to any accused products in litigation may raise controversies that are not presented here given the similarities with the prior art.

IX. DETAILED EXPLANATION OF GROUNDS[4]

A. Ground 1: Claims 1, 3, 9, and 12 are obvious over *Okada* in view of *Odendaal*, *Berghegger*, and *Black*

1. Claim 1

a) A system for inductive powering or charging of portable devices, the system comprising:

To the extent limiting, *Okada* (including as modified below) discloses this limitation. (Ex. 1002, ¶¶70-84, 111-120; §§IX.A.1(b)-(l).) *Okada* discloses a system for inductive powering/charging portable devices, *e.g.*, mobile phones. (Ex. 1005, Abstract, ¶¶0001, 0047.) FIG. 1 (annotated below) shows power supply system 1 (blue) including PC2, PDA3 (green), and cradle 4 (red). (Ex. 1005, ¶¶0034-0036.)

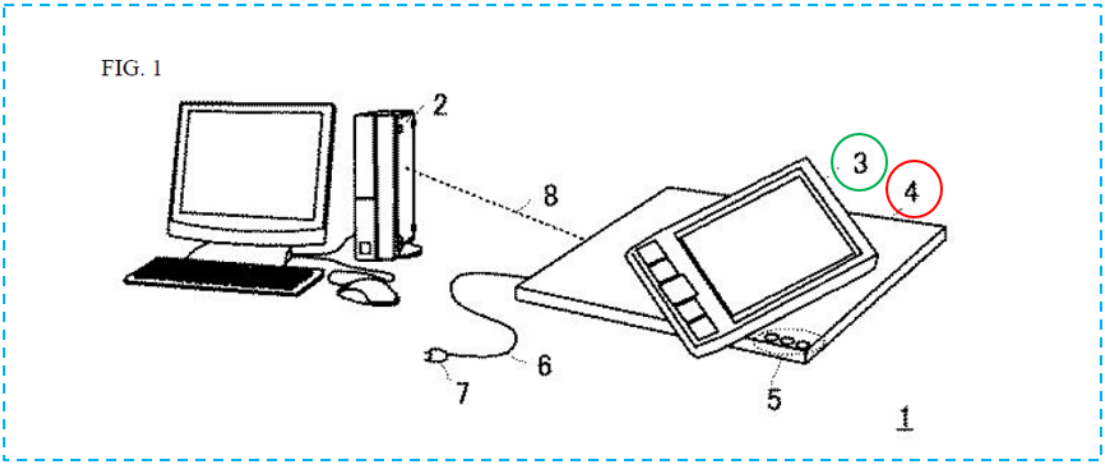

"[M]agnetic coupling" occurs that "induces voltage" in the PDA coil to supply power. (*Id.*, ¶0035.) (Ex. 1002, ¶113.) For example, *Okada*'s charger (*e.g.,* cradle 4) and/or its components is an exemplary "**system**."

FIG. 2 (below) describes an exemplary system, where cradle 4/PDA3 each includes circuitry/components and at least one coil. (Ex. 1005, ¶¶0035, 0037, FIG. 2.) Cradle 4 includes a **power transmitting module 10** ("PTM10"), and PDA3 includes a **power receiving module 40** ("PRM40"). (*Id.*, ¶¶0035-0037, 0038-0058, FIG. 8, 0110-0111; Ex. 1002, ¶114.)

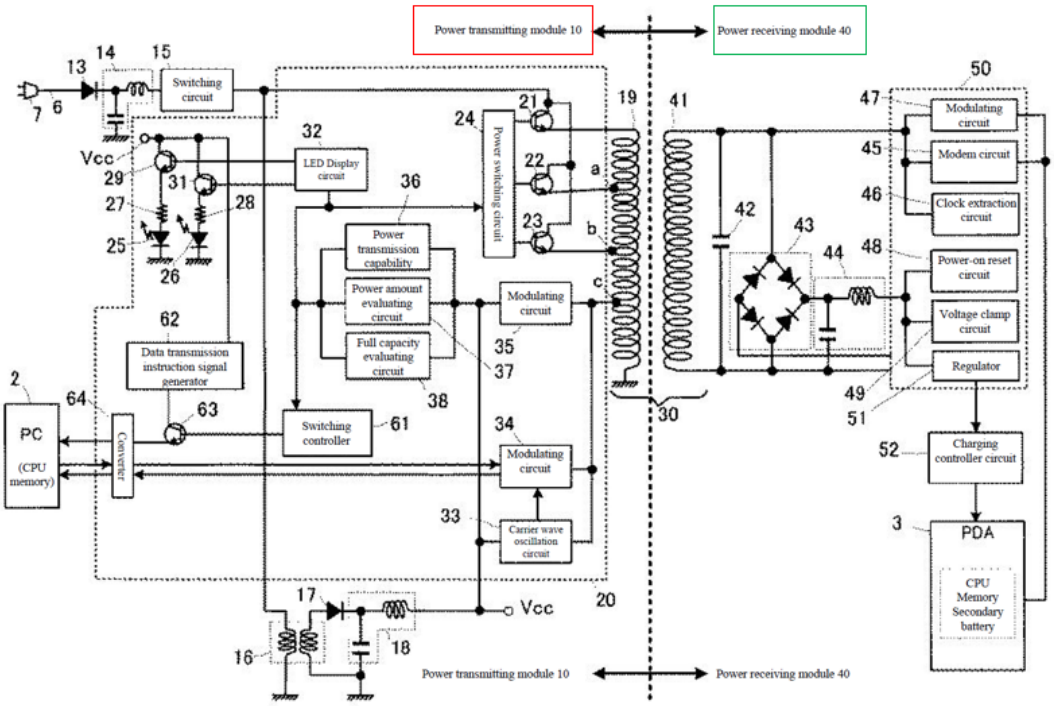

PTM10 converts received power to a DC signal via circuits 13-14. (Ex. 1005, ¶¶0038, 0049.) Switching circuit 15 generates a switching pulse signal using the DC

[4] References to prior art exhibits other than the asserted prior art identified in each of the grounds are to demonstrate/support Dr. Baker's opinions regarding a POSITA's state-of-art knowledge at the time, as applicable.

signal (*id*.), which is converted to a DC signal (V_{CC}) powering PTM10 components (via circuits 16-18). (*Id.*, ¶0039.) The pulse signal is also supplied to primary coil 19 via switches 21/22/23. (*Id.*, ¶¶0040, 0049-0051.) Power switching circuit 24 selects a switch 21/22/23 to allow the pulse signal to traverse selected turns of coil 19, enabling the system to select/adjust the power level transmitted to PRM40 (PDA3). (*Id.*, ¶¶0040, 0051, 0057, 0069-0073.) The transmitted power level may be determined based on the device's "power consumption information" provided by PRM40 to PTM10. (*Id.*, ¶¶0057, 0063-0064, 0069-0073; Ex. 1002, ¶¶115-116.)

Okada discloses various configurations/applications of such a "system" including PTM10 working with PRM40. (*E.g.*, Ex. 1005, FIGS. 2, 7-17, ¶¶0009-0032, 0094-0154). (Ex. 1002, ¶117.) For example, FIG. 7 (below) shows PTM10 including multiple primary coils (group 19x) and PRM40 including multiple secondary coils (41x). (Ex. 1005, FIG. 7, ¶¶0094-0096.)

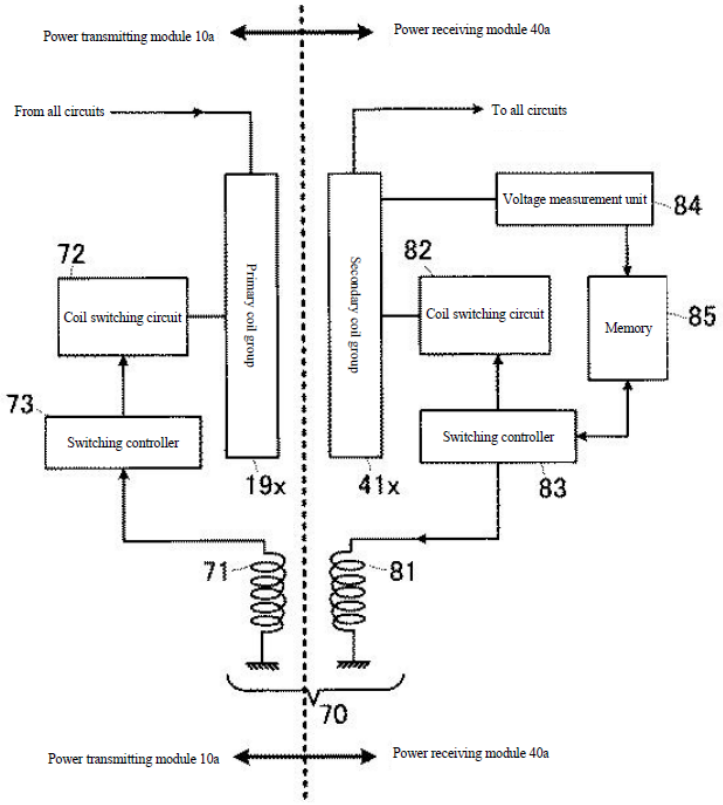

Circuits in PTM10 and PRM40 selectively activate coils "having a highest power transmission efficiency" for power transmission, to, *e.g.*, accommodate shifted positions of PDA3 relative to cradle 4. (*Id.*, ¶¶0103-105; *id.*, ¶¶0097-0102, 0106-0109; Ex. 1002, ¶117.)

Applications of these features are described with respect to other exemplary "system(s)." (Ex. 1005, ¶0107 (only one module has multiple coils), FIG. 9 (below), ¶¶0116-0118 (tabletop with multi-coil charging pad), FIG. 10, ¶0119 (charging multiple devices), FIGS. 11(a)-(b) (below), ¶¶0120-0122 (multiple PTM10s powering/charging multiple devices)), FIGS. 12(a)-(b) (below) ¶¶0123-0126, FIGS. 13(a)-(b) (below), ¶¶0127-0132; Ex. 1002, ¶118.)

FIG. 9

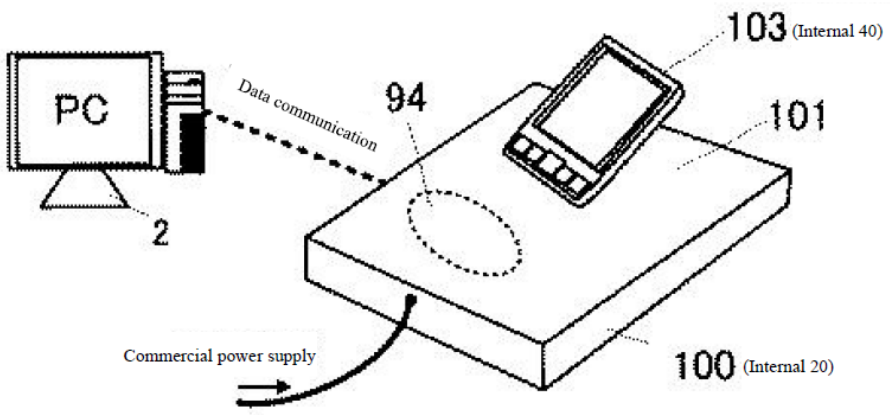
103 (Internal 40)
PC
Data communication
94
101
2
Commercial power supply
100 (Internal 20)

FIG. 10

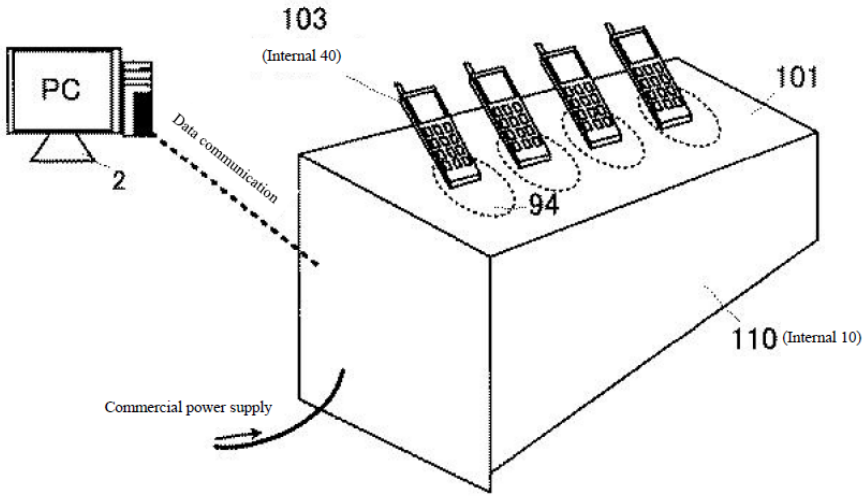
103
(Internal 40)
PC
101
Data communication
2
94
110 (Internal 10)
Commercial power supply

FIG. 11

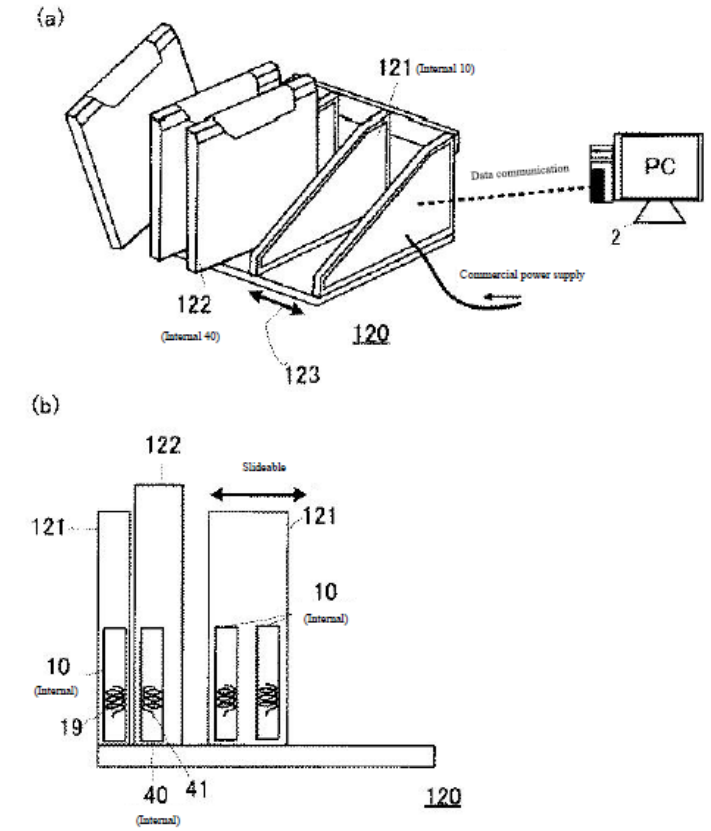
(a)
121 (Internal 10)
Data communication
PC
2
Commercial power supply
122
(Internal 40)
120
123
(b)
122
Slideable
121
121
10
(Internal)
10
(Internal)
19
40
41
(Internal)
120

FIG. 12

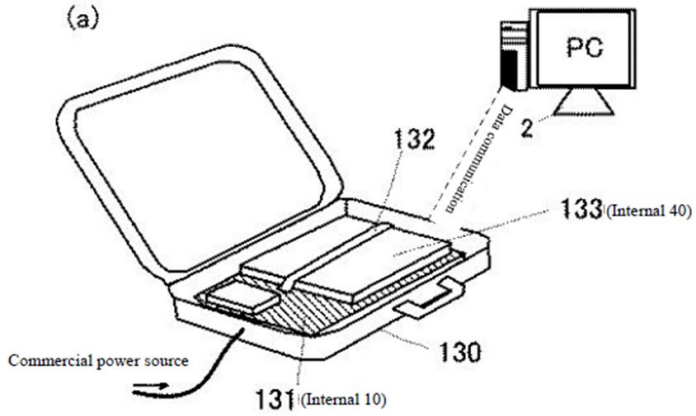
(a)
PC
2
Data communication
132
133 (Internal 40)
130
Commercial power source
131 (Internal 10)

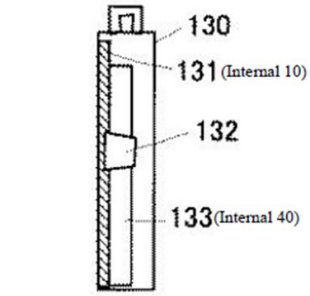
(b)
130
131 (Internal 10)
132
133 (Internal 40)

FIG. 13

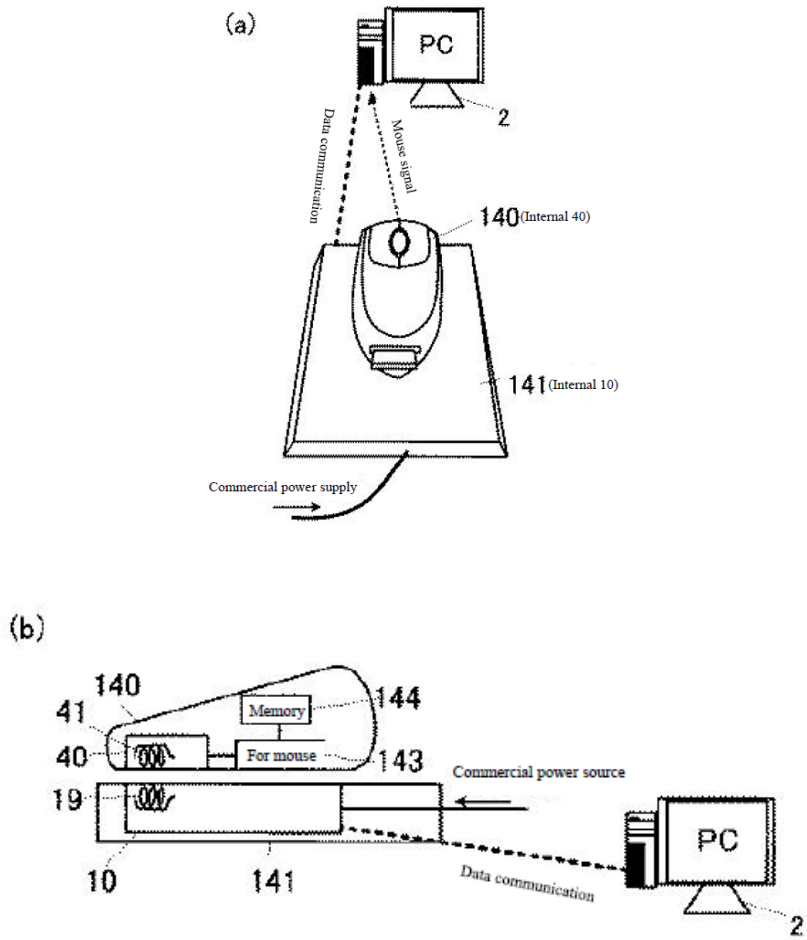

FIG. 3 (below) shows "power supply operations carried out between [PTM10 and PRM40]," applicable to the configurations disclosed by *Okada.* (Ex. 1005, FIG. 3, ¶0059; ¶¶0060-0090; 0094-0115; Ex. 1002, ¶119.) Thus, any disclosed configurations including features as recited in the limitations of claim 1 (including as modified) explained below is a "system" (*e.g.*, FIGS 1, 2, 7, 9-13). (Ex. 1005, ¶0030; §§IX.A.1(b)-(l); Ex. 1002, ¶120.)

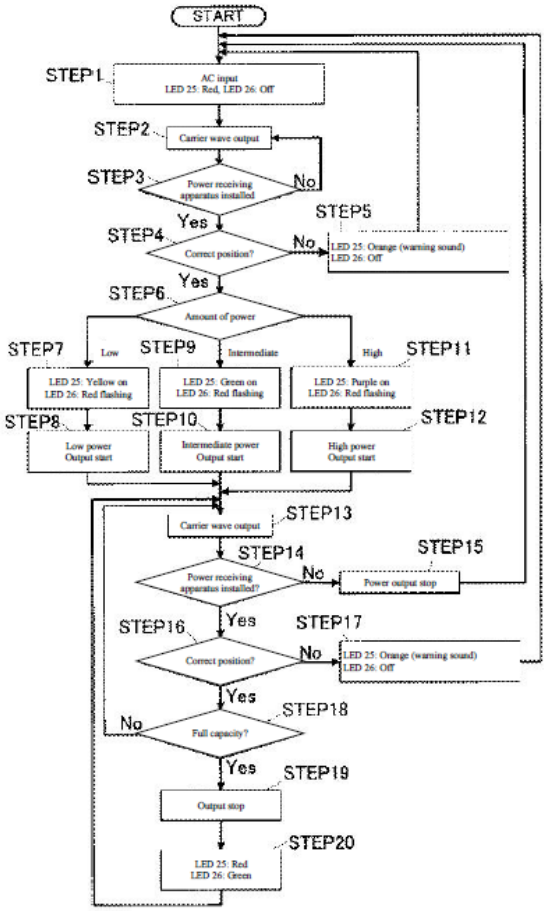
START
STEP1
AC input
LED 25: Red, LED 26: Off
STEP2
Carrier wave output
STEP3
Power receiving apparatus installed
No
Yes
STEP4
Correct position?
No
STEP5
LED 25: Orange (warning sound)
LED 26: Off
Yes
STEP6
Amount of power
STEP7
Low
STEP9
Intermediate
High
STEP11
LED 25: Yellow on
LED 26: Red flashing
LED 25: Green on
LED 26: Red flashing
LED 25: Purple on
LED 26: Red flashing
STEP8
STEP10
STEP12
Low power
Output start
Intermediate power
Output start
High power
Output start
STEP13
Carrier wave output
STEP14
STEP15
Power receiving apparatus installed?
No
Power output stop
Yes
STEP16
STEP17
Correct position?
No
LED 25: Orange (warning sound)
LED 26: Off
Yes
STEP18
No
Full capacity?
Yes
STEP19
Output stop
STEP20
LED 25: Red
LED 26: Green

b) one or more primary coils that are substantially planar and parallel to a surface of the system for powering or charging one or more compatible portable devices including batteries and receiver units, each receiver unit including a receiver coil and a receiver circuit including a receiver rectifier circuit;[5]

Okada in view of *Odendaal* discloses/suggests this limitation. (Ex. 1002, ¶¶121-142.)

Okada's "**system**" includes "**one or more primary coils**." (§IX.A.1(a); *e.g.*, Ex. 1005, FIG. 2 (**blue** below), ¶¶0040, 0050, FIG. 7, 0095-0107, FIGS. 9-10, ¶¶0116-119, FIGS. 11(a)-(b), ¶0121, FIGS. 12(a)-(b), ¶¶0123-0125, FIG. 13, ¶0132; Ex. 1002, ¶122.)

[5] Petitioner interprets the plain claim language to at least encompass that the one or more "compatible portable devices" includes at least one "batter[y]" and at least one "receiver unit[]."

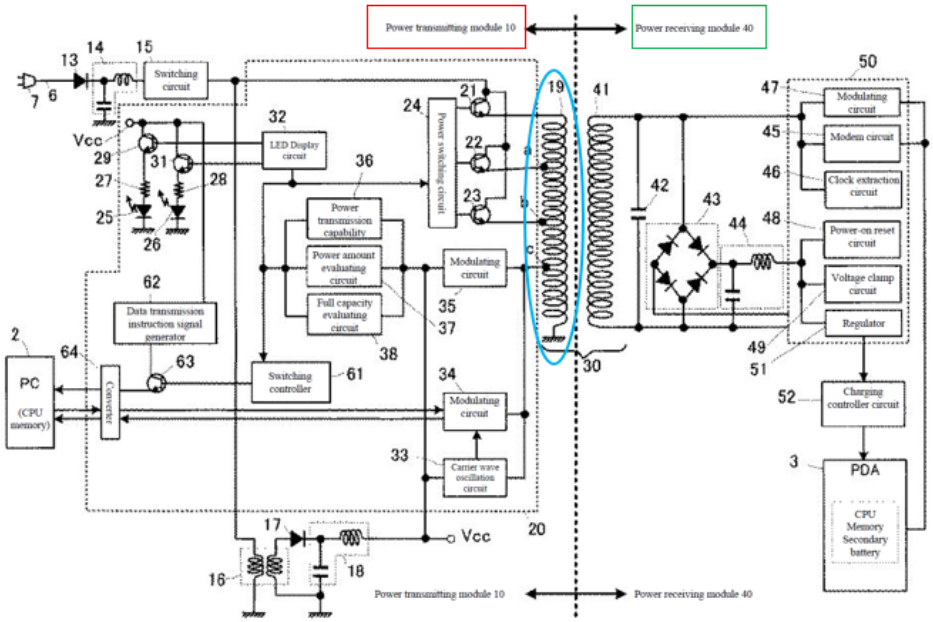

The "**primary coil(s)**" is/are used for "**powering[/]charging one or more compatible portable devices**." (Ex. 1002, ¶123.) Switches 21/22/23 are selected to provide selected power level(s) transmitted to PRM40. (§IX.A.1(a); Ex. 1005, FIG. 3, ¶¶0040, 0051, 0057, 0069-0073.) PTM10 determines a "**compatible** portable device" is properly positioned before powering/charging. (Ex. 1005, FIG. 3, ¶0057.) *Okada* refers to such a device as a "common cradle 4 **compatible** device" or "device capable of receiving power." (*Id.*, ¶¶0064-0073; Ex. 1002, ¶123.)

The "**one or more compatible portable devices**" (*e.g.,* PDA3.) includes "**batter[ies] and receiver unit[s]**." Indeed, PDA3 includes a "secondary battery" and PRM40. (Ex. 1005, ¶¶0012, 0015, 0037, FIG. 14, ¶¶0134-0136, FIG. 15, ¶¶0138-0140, FIG. 16, ¶¶0142-0144, claim 4, FIG. 2 (**purple** below)); Ex. 1002, ¶124.)

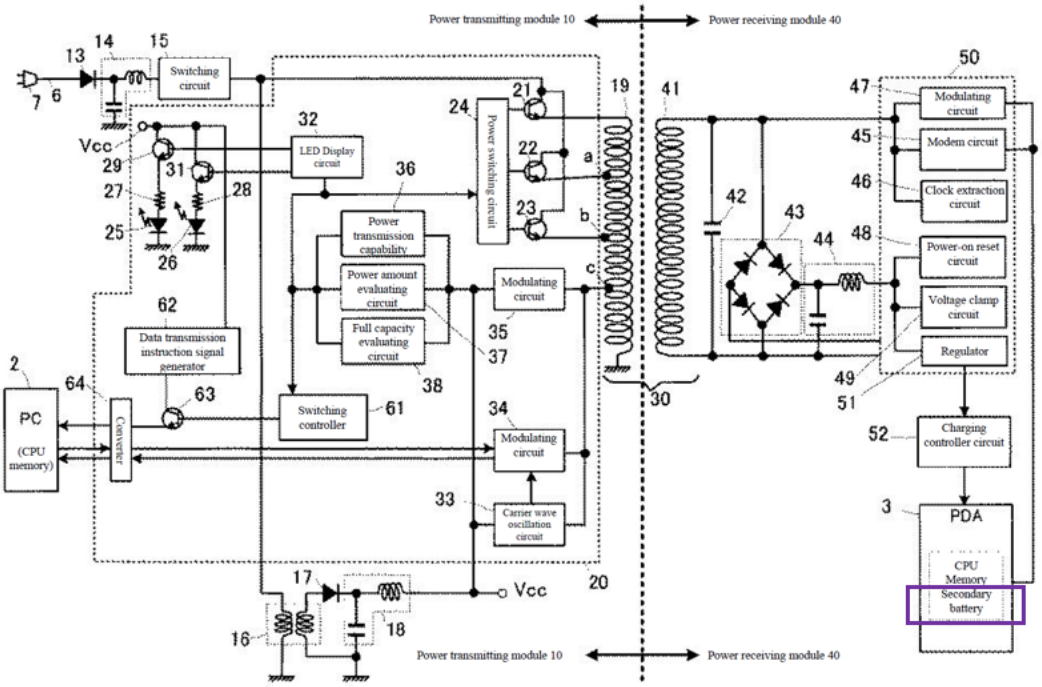

PRM40 is an example of a "**receiving unit**" including "**a receiver coil and a receiver circuit including a receiver rectifier circuit**." (Ex. 1002, ¶125; §IX.A.1; Ex. 1005 (citations *supra*).) FIG. 2 (annotated below) exemplifies a PRM40 ("**each receiver unit**") with coil 41 (**orange**) ("**receiver coil**") (Ex. 1005, ¶0040), and a "**receiver circuit**" (**red**), including at least rectifying circuit 43 (**blue**) ("**receiver rectifier circuit**"), clock circuit 46, modulating circuit 47, and may further include

one or more other PRM40 components (other than the **battery**) (*e.g.*, circuits 42, 44-45, 48-49, and/or 51-52). (Ex. 1005, ¶0047, FIG. 2; Ex. 1002, ¶125.)[6]

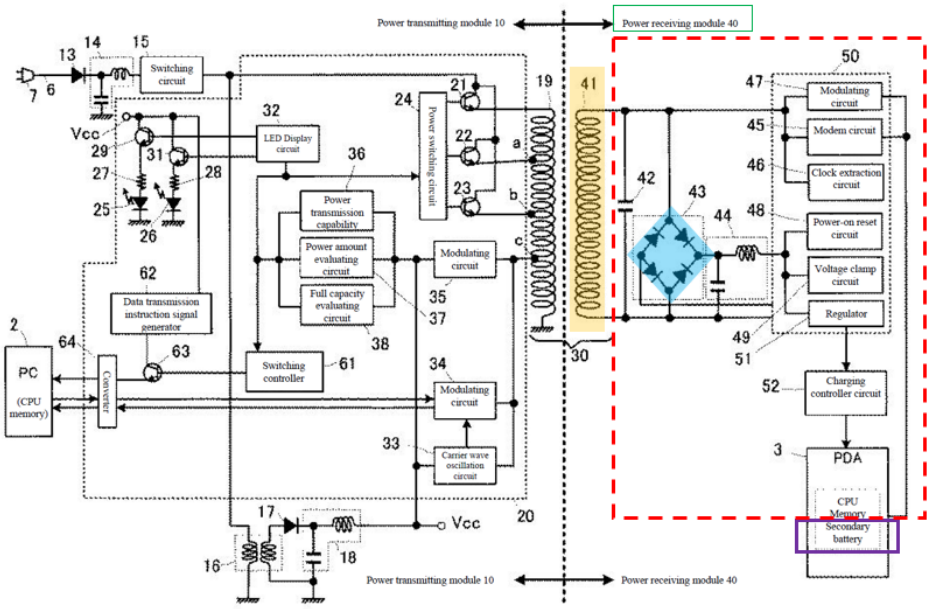

The primary coil(s) in *Okada* are **"substantially…parallel to a surface of the system."** *Okada* shows examples of coil 19 positioned substantially parallel to a surface (**blue** parallel (**red**) to coil 19 (**orange**) below) of the system. (Ex. 1005,

[6] The annotated figures provided herein are exemplary visual aids and are not intended to define limit/constrain the prior art mappings (alone or as modified). Such mappings may encompass variations of components, or other components/circuitry, etc. not shown but described/suggested by *Okada* (or as modified) that meet the challenged claims as discussed.

FIGS. 11(b)(below left), 13(b)(right), §IX.A.1(a).) A similar arrangement exists with the other exemplary systems discussed above. (Ex. 1002, ¶126.)

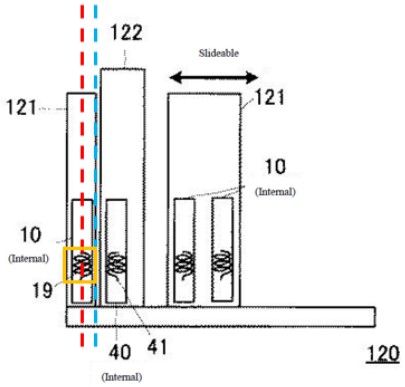

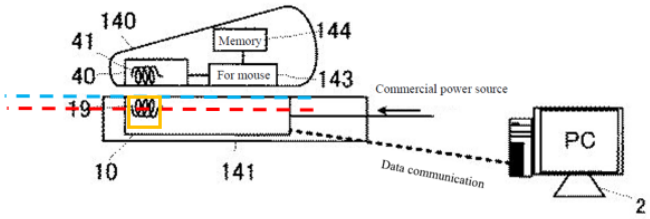

While *Okada* does not expressly state that the "**primary coils…are *substantially planar* and parallel to a surface of the system**," a POSITA would have found it obvious to configure the *Okada* system to implement/use planar primary coils (and secondary coil(s)) in light of *Odendaal*. (Ex. 1002, ¶127.)

Planar coils placed in parallel to a power transfer system's surface were known. (Ex. 1002, ¶¶50-53, 128-132; Ex. 1027, 1-3; Ex. 1015, FIGS. 1-2, 3-4, 7-12, Abstract, 1:5-2:29, 2:64-3:27, 3:39-51, 5:5-47, 5:48-9:5; Ex. 1047, FIGS. 1-3, 6, 8A-9, ¶¶0002, 0006-0007, 0018-0025-0034; Ex. 1025, FIGS. 1, 3, 8-9, 13, 1:10-2:3, 2:5-12 (reasons for thin coil designs), 2:14-3:2, 4:19-32, 7:25-9:28, 12:27-32, 14:4-17; Ex. 1026, FIGS. 1-2, 5, 9A-9C, Abstract, 1:3-4:4, 4:6-9:4, 11:4-15; Ex. 1009, Abstract, FIGS. 1-3, 1:4-51, 1:54-2:26, 2:47-3:8, 3:9-39, 4:18-60); 1024, FIGS. 3, 8-9, 1:12-15, 1:39-2:29, 9:41-53, 10:45-57, 11:60-13:4; Ex. 1028, Abstract,

FIGS. 2-7, ¶¶0001, 0004-0007, 0025-0032, 0041; Ex. 1029, 1-4, 9-19; Ex. 1030, FIGS. 3-7B, 1:5-9, 1:59-61, 3:19-56, 4:62-567, 5:25-44); Ex. 1036, Abstract, 2:22-3:6 ("primary winding…***substantially parallel*** to [] planar charging surface" and formed on planar PCB"), 5:22, 11:18, 23:20-24:8, 24:19-22.)

Aware of such coil designs (and associated tradeoffs, *e.g.*, size/weight/cost/performance), a POSITA would have been motivated to consider relevant teachings (*e.g.*, *Odendaal*) when configuring/implementing a system similar to *Okada*. (Ex. 1002, ¶133; *see e.g.,* Ex. 1047, ¶0033.)

Odendaal discloses inductive power transfer technologies/techniques, and like *Okada*, is in the same technical field as the '500 patent. (§IX.A.1(a); Ex. 1008, Title, Abstract, FIGS. 1A-4, 11-12, 1:5-3:57, 4:50-5:8, 5:24-28, 6:59-64; Ex. 1001, Abstract, 4:13-14.) Also, like *Okada*, *Odendaal* discloses features reasonably pertinent to particular problem(s) the inventor for the '500 patent (and a POSITA) was trying to solve. (Ex. 1001, 4:13-29; Ex. 1008, Abstract, 1:5-3:57, 4:50-5:8, 5:24-28, 6:59-64; §§IX.A.1(a)-(b); Ex. 1005, FIGS. 1, 2, 7, 9-12 ¶¶0037-0048, 0049-0058, 0094-0109, 0116-0126.) Such teachings thus would have been consulted when designing/implementing a contactless/inductive charging system, like *Okada*. (Ex. 1002, ¶¶85-88, 134-135.)

Odendaal discloses known use of **planar-type inductor coils** in an inductive power transfer system, for, *e.g.*, charging a cellphone battery. (Ex. 1008, FIGS. 1A-

1B, 2A, 2C, 8E, 1:58-2:43.) *Odendaal* describes a planar resonator for power transfer with characteristics of an integrated inductor-capacitor transformer. (*Id.*, 1:53-57.) The planar resonator includes spirals on opposite sides used for energy transfer "so that a battery of a cellphone could be charged without physical wires." (*Id.*, 1:60-67.) The planar resonator "transfer[s] power across the "interface-of-energy-transfer" (IOET) in either an electric or **magnetic form**, or both." (*Id.*, 2:1-7, 7-10 ("can permit transformer action…**without** capacitive energy transfer"), 2:65-3:5, 4:44-5:8, 6:1-18.) The planar coils may have "a thin and/or relatively flat top coil surface" and be arranged in upper and lower configurations "with an air gap." (*Id.*, 2:44-54.) "The spiral-shaped conductor may comprise **pcb** spiral-wound conductors" and "a battery charging circuit can be coupled to one of the…spiral shaped conductors, and **load…coupled to the other**…" where "coupling between" the battery and charger "may comprise…**magnetic coupling,** wherein power is transferred by the **coupling of…and/or magnetic flux** across the IOET." (*Id.*, 2:55-64.) *Odendaal*'s teachings of "**planar**" coils (*id.*, 1:60-67) is consistent with that known in the art. (Ex. 1002, ¶¶136-138; Ex. 1008, 1:60-67, 2:19-21, 2:29-44, 3:65-67.) Moreover, consistent with the thin form factor configurations of *Okada* (*e.g.*, charging pads/case), *Odendaal* discloses that the spiral coils "are preferably integrated into a **planar (flat/thin) structure**" (Ex. 1008, 3:3-5) and may conform to the housing surface to facilitate charging a device "in close proximity" (*id.*, 2:29-

44). Such arrangements disclose coils that are parallel to a system's surface. (Ex. 1002, ¶139.)

In light of such teachings, and state-of-art knowledge, a POSITA would have been motivated, and found obvious, to modify the *Okada* system to use "**primary coils that are "substantially planar and parallel to a surface of the system**" (and complemented such a design with corresponding planar secondary coil(s) in the portable device) to expand/complement applications compatible with those contemplated by *Okada* to use thin(ner) unit(s)/device(s). (Ex. 1002, ¶140; §IX.A.1(a).) Such a modification would have provided options to reduce the volume the coil(s) occupy, device size/weight, and expanded/enhanced applications of *Okada* (*e.g.,* pads, tables, cellphone(s), etc.) (*Id.*; §IX.A.1(a); Ex. 1005, FIGS. 1, 9, 10-16, ¶¶33-34, 0116-0146.) Planar coils provided options to reduce the distance between primary/secondary coils (promoting close proximity coupling (Ex. 1008, 2:29-44)) for improving power transmission efficiency, reducing energy waste, and shortening charging time. (Ex. 1002, ¶140; Ex. 1005, ¶¶0066-0068, 0112, FIGS. 4(a)-4(b); Ex. 1036, 24:19-22.) A POSITA would have appreciated that implementing complementary planar coils (primary-secondary) would have promoted efficient energy transmission between the charger and receiver devices, especially where the coils were aligned to allow the perpendicular magnetic field

generated by the primary coil(s) to be efficiently received by the receiving coil(s). (Ex. 1002, ¶¶36-53, 141; *infra* §IX.A.1(c)(2).)

A POSITA would have had the skills and rationale in light of the teachings/suggestions of *Okada-Odendaal*, and a POSITA's state-of-art knowledge, to implement the above-modification while considering design tradeoffs and techniques/technologies with a reasonable expectation of success. Especially given such modification would have involved known technologies/techniques (*e.g.*, planar coils to facilitate wireless power transfer) to yield the predictable result of providing an inductive powering/charging system with thinner charger units, like that contemplated by *Okada-Odendaal*. (Ex. 1002, ¶142; §IX.A.1(a)) *See KSR Int'l Co. v. Teleflex, Inc.*, 550 U.S. 398, 416 (2007).

c) Limitation 1(c)

Okada-Odendaal in view of *Berghegger* discloses/suggests this limitation, as discussed below in three parts. (Ex. 1002, ¶¶143-172.)

(1) <u>1(c)(1):</u> one or more drive circuits including one or more FET drivers, FET switches, and capacitors coupled to the one or more primary coils…

Switching circuit 15 in PTM10 generates a switching pulse signal supplied to primary coil 19 via one of switches 21/22/23, which is selected by power switching circuit 24. Switches 21/22/23 can be MOSFETs ("**FET switch**"). (Ex. 1005, ¶0049.) The switching pulse signal is also converted (via circuits 16-18) to V_{CC} for

powering PTM10 components. (§IX.A.1(a); Ex. 1005, ¶¶0038-0040, 0046, 0049-0051, FIG. 2.) Such PTM10 components are (directly/indirectly) coupled to, and configured to, drive/power primary coil 19. (Ex. 1002, ¶¶144-145.) Circuits 16-18 provide power to other components, *e.g.*, circuit 33, which outputs signals driving coil 19 to send a carrier wave to PRM40. (Ex. 1005, ¶¶0062-0063, ¶¶0010-0014, 0042-0046, 0055-0058, Claims 2-3, 6; §§IX.A.1(a), IX.A.1(d)-(l).) Circuit 15 also provides the switching pulsed signal to (FET) switches 21/22/23, and together with circuit 24, provides signals that drive coil 19 to transfer power. (*Id.*; Ex. 1005, ¶¶0040, 0049-0051, 0070-0073.) (Ex. 1002, ¶145.)

Thus, *Okada*'s examples of "**one or more drive circuits**" include: **(1)** circuit 15 (with/without circuits 13-14) and circuits 21-24, **(2)** circuits 16-18 (providing Vcc for IC 20, including circuit 24 which controls (FET) switches 21/22/23), or **(3)** a combination of such components (with/without other circuitry in IC 20). (*See* FIG. 2, annotated below in pink.) The "**drive circuit**" includes "**one or more FET drivers**" (*e.g.,* switch 15, circuit 24, and/or one or more of circuits 16-18, or a

combination of such components) and "**FET switches**" (*e.g.*, switches 21/22/23). (Ex. 1002, ¶146; §IX.A.1(g).)[7]

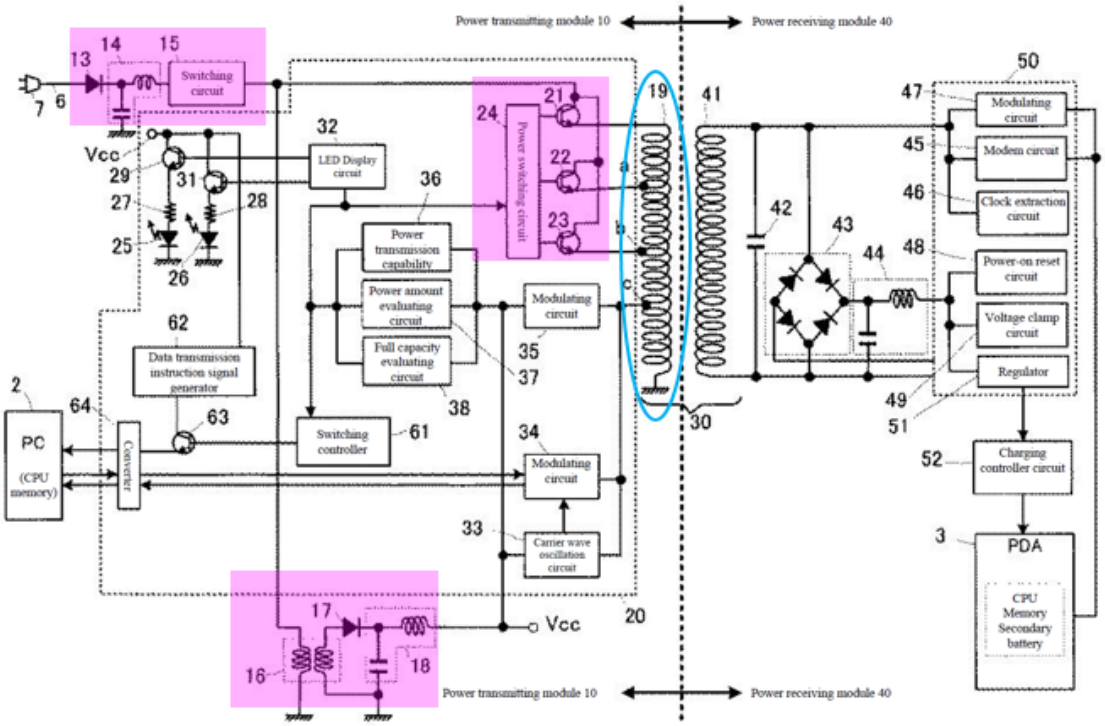

Okada does not expressly disclose the drive circuit(s) having "**one or more FET drivers, FET switches, *and capacitors coupled to the one or more primary***

[7] *Okada*'s circuitry that provides a switching signal to power primary coil 19 is similar to drive circuitry discussed in the '500 patent. (§IX.A.1(a); Ex. 1001, 21:48-51, 23:5-6, 40:33-43, 43:5-6.) (Ex. 1002, ¶146.)

coils."[8] While capable of adjusting power levels at the **onset** of a charging process, *Okada* does not expressly indicate adjusting power levels **during** the charging process.[9] (Ex. 1005, ¶¶0069-0076, FIG. 3.) Nevertheless, a POSITA would have found it obvious to modify the *Okada-Odendaal* system to include such features in light of *Berghegger*. (Ex. 1002, ¶147.)

Berghegger discloses a system for inductively powering/charging a device/battery. (Ex. 1006, FIGS. 1a-1b, 4-6, Abstract, 1:65-2:17, 2:18-3:30, 5:27-30, 6:12-19, 6:37-45.) A controller 40 drives primary-side inductor L_P "magnetically coupled to" secondary-side inductor L_S to induce an AC voltage on L_S, which is rectified and supplied to load R_L (including a battery). (*Id.*, 6:5-15; *id.*, 6:38-40 ("charging tray" and "mobile...telephone").) *Berghegger* is thus in the same technical field as the '500 patent and *Okada*, and discloses features reasonably pertinent to particular problem(s) the inventor for the '500 patent (and POSITA) was trying to solve. (Ex. 1001, Abstract, 4:13-29; Ex. 1006, Abstract, 2:18-20;

---

[8] Dependent claim 3 separately recites the "drive circuits" and "capacitors." Accordingly, the claimed "drive circuit(s)" may or may not include the "capacitor(s)."

[9] The modification associated with these features are also applicable to later limitations, such as *e.g.*, limitations (1(f)-(g), etc.).

§§IX.A.1(a)-(b); Ex. 1002, ¶¶89-97, 148-150.) Thus, a POSITA would have consulted *Berghegger* in context of *Okada-Odendaal*. (Ex. 1002, ¶150.)

Controller 40 (FIG. 4) includes a drive circuit 2 (FIG. 2) and MOSFET switches S1-S2 (FIG. 1b) for "driving the inductor L_P and the resonant capacitor C_P on the primary side." (Ex. 1006, 6:5-8.)

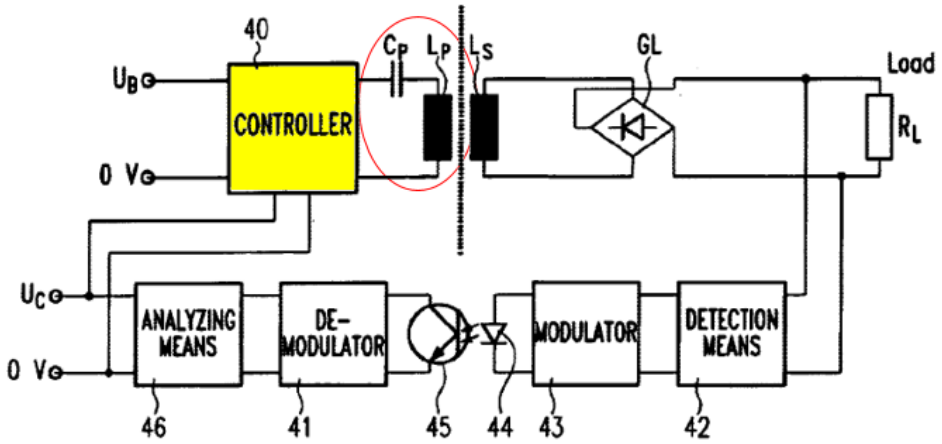

Fig.4

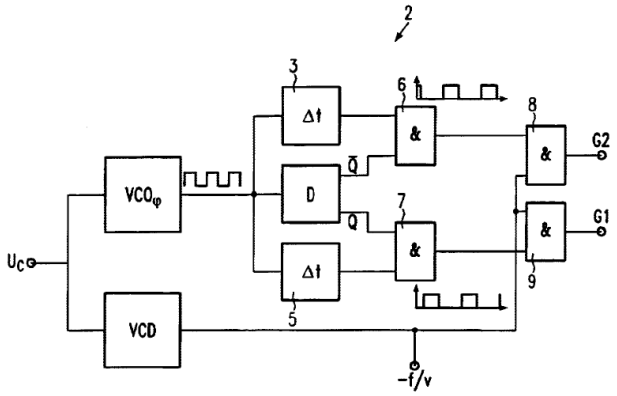

Fig.2

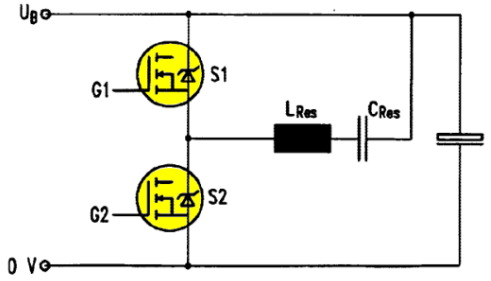

Fig.1b

Drive circuit 2 receives a control signal U_C that ultimately determines the frequency of AC signals provided by electrodes G1-G2, where U_C "depends on the power demand of the secondary side." (*Id.*, 4:51-61 (G1-G2 controlled by drive circuit 2 (FIG. 2) and VCO_p and VCD both receive U_C), 4:62-5:64 (U_C determines frequency of ac signal provided by G1-G2).) G1-G2 signals control the frequency at which MOSFETs S1/S2 operate to drive inductor L_P and resonant capacitor C_P. (*Id.*, 3:51-4:50; Ex. 1002, ¶¶151-152.) The FIG. 5 (below) configuration is similar to FIG. 4 (Ex. 1006, 5:65-6:37), but where U_C is provided using coils L_S and L_P. (*Id.*, 6:50-53, 6:53-8:8; Ex. 1002, ¶152.)

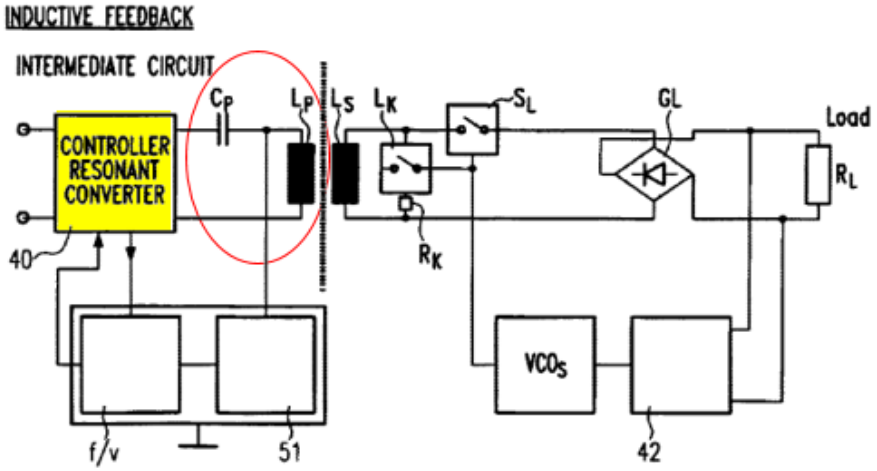

Fig.5

Controller 40 (**drive circuit**) includes **FET driver(s)** (*e.g.*, components in circuit 2) controlling the oscillating frequency of **FET switches** (S1/S2) for powering a primary coil, and a resonant capacitor coupled to the primary coil. (Ex. 1002, ¶153; Ex. 1006, 4:12-19 ("connecting L_P and C_P").)

In light of *Berghegger*, a POSITA would have been motivated and found it beneficial to modify the *Okada-Odendaal* system to include a **drive circuit** having **FET driver(s)**, **FET switches**, and a **capacitor** coupled to the primary coil(s) of the system to adjust power levels during charging while providing more efficient power transfer via capacitive filtering. A POSITA would have appreciated the guidance of *Berghegger*, which describes a closed-loop feedback arrangement, where a drive circuit adjusts the oscillating frequency and thus the power delivery based on device information (*e.g.*, control signal U_C that "depends on the power demand of the secondary side"). (Ex. 1002, ¶154.)

Such a configuration would have improved/complemented the *Okada-Odendaal* system, which also uses device information to control/adjust power delivery in a closed-loop feedback fashion, but does so at the onset of charging. (Ex. 1005, ¶¶0069-0076, FIG. 3; §§IX.A.1(a)-(b).) Implementing features similar to those described by *Berghegger* would have ensured "a sufficient amount" of power is "available on the secondary side" during power delivery (whether initiated at a low/intermediate/high level) while also preventing "an unnecessarily large amount of energy being consumed on the primary side" to achieve a "more energy-efficient continuous operation." (Ex. 1006, 2:28-44; Ex. 1002, ¶155.)

A POSITA would have recognized *Berghegger* teaches that power required by a load "is **variable in time**" and thus a closed-looped control feature (similar to

that described in *Berghegger*) would enable accurately adjusted power delivery based on the time-varying power demand during powering/charging operations. (*Supra*; Ex. 1006, 6:12-15.) A POSITA would have thus been motivated to configure/modify the *Okada-Odendaal* system to implement drive circuitry (including FET driver(s), FET switches, and a capacitor (*see* below)) to allow fine tuning of the determined power level while the mobile device is charged. (Ex. 1002, ¶156.)

Berghegger also teaches that using a capacitor with the primary-side inductor "to obtain a serial resonant circuit" which "**has the advantage**" of "**improv[ing]**" the "**power transmission from the primary side to the secondary side**" (Ex. 1006, 2:58-61) and also choosing the highest frequency produced by the VCO to be "equal to the resonant frequency of said serial resonant circuit" (*id.*, 2:61-64). A POSITA was aware that capacitor circuits provided benefits in improving power transmissions in an inductive-based systems, like *Okada-Berghegger* (*e.g.*, minimizing/reducing unwanted radiations and heat issues caused by harmonics, etc.) (Ex. 1002, ¶¶157-159; Ex. 1016, 631 ("Resonant circuits…useful for constructing filters"), 641, 798, ("**blocks out all higher harmonics**"); Ex. 1013, (capacitor/switches reducing harmonics from primary coil), FIGS. 3 (annotated below), 6, 3:29-4:5, 4:19-5:7 (resonant circuit that "**reduce harmonics and eddy current**" to minimize heat and "without causing excessive energy loss"), 7:24-8:14,

8:17-23, 24-31, 9:26-12:27); Ex. 1008, 2:16-19; Ex. 1001, 21:17-34 (acknowledging harmonics are "undesirable").)

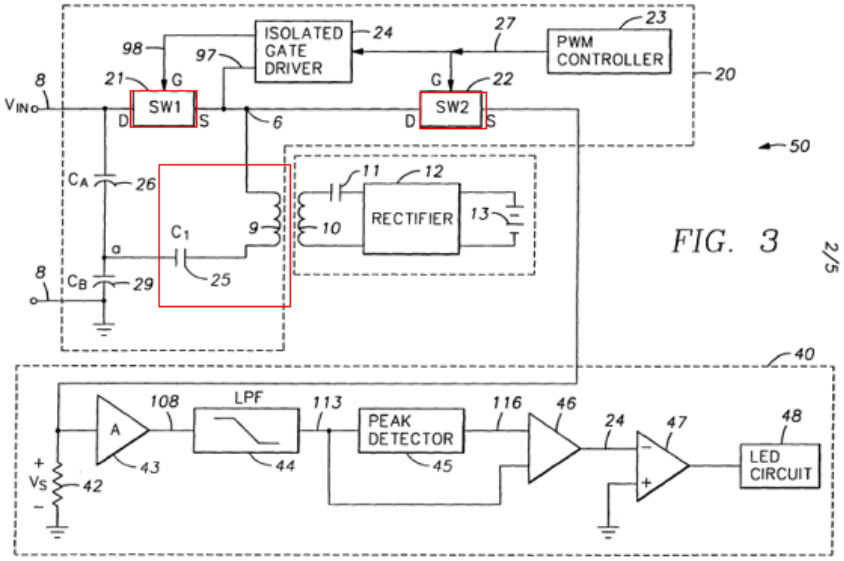

(*See also* Ex. 1012, FIGS. 2, 5 (C1 25, inductor 9), 8 (same), 3:30-62, 8:47-9:51; Ex. 1014, 67-68 ("filter…for ***reduction of harmonic output***"); *id.*, 62-68; Ex. 1015, FIGS. 1-2, 5-12, Abstract, 1:55-2:10, 3:28-51, 4:22-44, 5:45-6:4); Ex. 1020, Abstract, (harmonic reducing tuning capacitor); Ex. 1021, ¶¶00164-0165 ("**known in the art to drive coils using parallel or series resonant circuits**" to allow "maximum current flow[] through the primary coil"); Ex. 1029, 22-25; Ex. 1002, ¶¶57-65, 159.)

In light of *Berghegger* and a POSITA's knowledge, a POSITA would have been motivated to consider/implement a capacitor with the drive circuit(s)/primary

coil(s) in PTM10 of *Okada-Odendaal* to improve power transmission and reduce harmonics. (Ex. 1002, ¶160.)

A POSITA would have had the skill and rationale in implementing, and expectation of success in achieving, the above-modification, especially given the use of capacitors and closed-loop feedback control technologies/techniques for adjusting power delivery was known (*e.g.*, *Okada* and *Berghegger*). (Ex. 1002, ¶161.) Such a modification would have involved applying known technologies/techniques (*e.g.*, FET-based drive circuitry in closed-loop feedback power transfer system with capacitive filtering to adjust power delivery) to yield the predictable result of an inductive power/charging system that ensures sufficient power is provided efficiently during power delivery with reduced heat waste and signal distortion. (*Id.*) *KSR* at 416-18.

There were various ways for a POSITA to implement such modifications. (Ex. 1002, ¶162.) For example, an appropriately designed capacitor-based filter positioned between switches 21/22/23 and primary coil 19, or between switching circuit 15 and the switches would have achieved above-noted filtering benefits (*e.g.*, reduced harmonics). (*Id.*) Another example is where *Okada*'s features/components used to receive/pass/process device information in PTM10 for power transfer control (*e.g.*, demodulator 35, circuits 36-38 (Ex. 1005, ¶0064; *infra* §§IX.A.1(d)-(e)) would have been leveraged to achieve the noted beneficial power delivery features during

charging/powering operations (*e.g.,* use received device information (like U_C in *Berghegger*) to control operating frequency of the modified/configured drive circuit (*e.g.*, switching circuit 15, etc.). (Ex. 1002, ¶162; *infra* §IX.A.1(e).)[10]

(2) <u>1(c)(2):</u> …that when operated apply an alternating electrical current to the one or more primary coils to generate a magnetic field in a direction substantially perpendicular to the plane of the one or more primary coils and the surface of the system…

The *Okada-Odendaal-Berghegger* combination discloses/suggests this limitation. (Ex. 1002, ¶¶163-168; §§IX.A.1(a)-(c)(1); IX.A.1(c)(3).)

The above-discussed *Okada-Odendaal-Berghegger* system would have included a drive circuit (with FET driver(s) and switch(es) and associated capacitor) having a closed-loop feedback control. (§IX.A.1(c)(1).) In light of *Berghegger-Okada,* a POSITA would have understood that such a drive circuit in the *Okada-Odendaal-Berghegger* system, during operation, would have provided an alternating signal to a primary coil L_P. (Ex. 1002, ¶164; Ex. 1006, Abstract ("**alternating signal…supplied to the inductor (L_P)**"), 4:41-42, 6:5-9, 8:13-15; §IX.A.1(c)(1); Ex. 1005, ¶¶0110-0111.)

---

[10] The examples do not limit the possible modifications/implementations. Other successful designs/configurations could/would have been contemplated. (Ex. 1002, ¶162.)

Consistent with such teachings, a POSITA would have also understood that the ac signal applied to the primary coils in the modified *Okada* system would have generated a "**substantially perpendicular**" "**magnetic field**" as claimed, given such a field would have been the natural result of activating the primary coil to inductively transfer power as described by *Okada*, *Odendaal,* and *Berghegger*. (Ex. 1002, ¶¶165-168; Ex. 1005, ¶¶0035, 0051, 0056, 0063, 0066, 0121, ¶¶0127-0132, FIGS. 11(b) and 13(b); Ex. 1006, 4:25-27 ("charge mode" where LP is "magnetically coupled with" LS), 6:5-9; Ex. 1008, 1:17-20, 2:1-29); §IX.A.1(b); Ex. 1011, 557-562, 593-594, 601; Ex. 1009, 2:62-3:8 ("current is inducted into" receiving device "when magnetic field lines are approximately 90 degrees to the first part of the transformer"), 1:54-2:18, 3:20-4:11, FIGS. 1-3; Ex. 1010, FIGS. 1-5B, 8:55-9:52, FIGS. 6A-10, 7:21-8:54, 9:53-10:22, 11:27-14:67; Ex. 1029, 3-4, 27-50); Ex. 1019, FIG. 2B (showing magnetic field (blue below) perpendicular (green) to charger surface 1), ¶¶0027, 0064.)

FIG. 2B

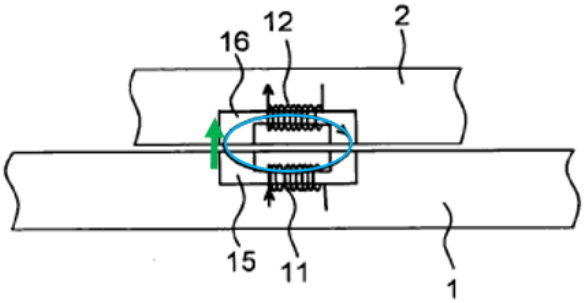

A POSITA would have understood planar primary coils in the *Okada-Berghegger-Odendaal* system would have likewise generated a magnetic field that was substantially perpendicular to the plane of coils 19 and system surface, as known in the art. (Ex. 1002, ¶¶166-168; §IX.A.1(b); Ex. 1011, 558, 559 ("magnetic field at the center of [a wire] loop is perpendicular to the plane of the loop"), 562-564, 592; Ex. 1048, Abstract, FIGS. 1-6, 1:28-2:4, 2:27-3:14, 4:11-24, 5:23-6:15, claims 1-88; Ex. 1049, Abstract, FIGS. 1, 5-6, 9, 11-12, 24-26, ¶¶0008-0010, 0044-0051, 0065-0066; Ex. 1050, Abstract, FIGS. 1-5, 9A-9C, 5:22-6:45, 11:22-33, 12:28-38, 16:25-17:23, 17:61-18:3 ("**substantially perpendicular**" magnetic field from planar coils).)

(3) <u>1(c)(3):</u> … to provide power to the one or more portable devices capable of being powered or charged by the system when present and near the one or more primary coils;

The *Okada-Odendaal-Berghegger* combination discloses/suggests this limitation. (Ex. 1002, ¶¶169-172.)

Okada discloses detecting the presence, proximity, and alignment of a mobile device capable of being powered/charged to primary coil 19 before providing power to the device like that claimed in limitation 1(c)(3). (§§IX.A.1(a)-1(c)(2); Ex. 1005, ¶¶0056-0058, Ex. 1002, ¶170.) PTM10 receives "a code indicating that a device is capable of receiving power" from PRM40 used by circuit 36 to "evaluate whether supplying power to the device via the common cradle 4 is **feasible**." (Ex. 1005,

¶0057; *id.*, FIG. 3 (annotated below), ¶¶0059-0064 (circuit 36 determines whether portable device is mounted) (*e.g.*, whether a "**capable**" device is "**present**" over "**the one or more primary coils**"), 0065-0068 (determining whether coil 41 is "arranged at positions having high power transmission efficiency" based on positional offset ("**near**" primary coils), 0069, 0073-0076 (provide appropriate power to properly positioned device (FIG. 3, Steps 6-12) and continue to check after onset of power/charge operations (FIG. 3, Steps 13-20), 0090.) (Ex. 1002, ¶171.)

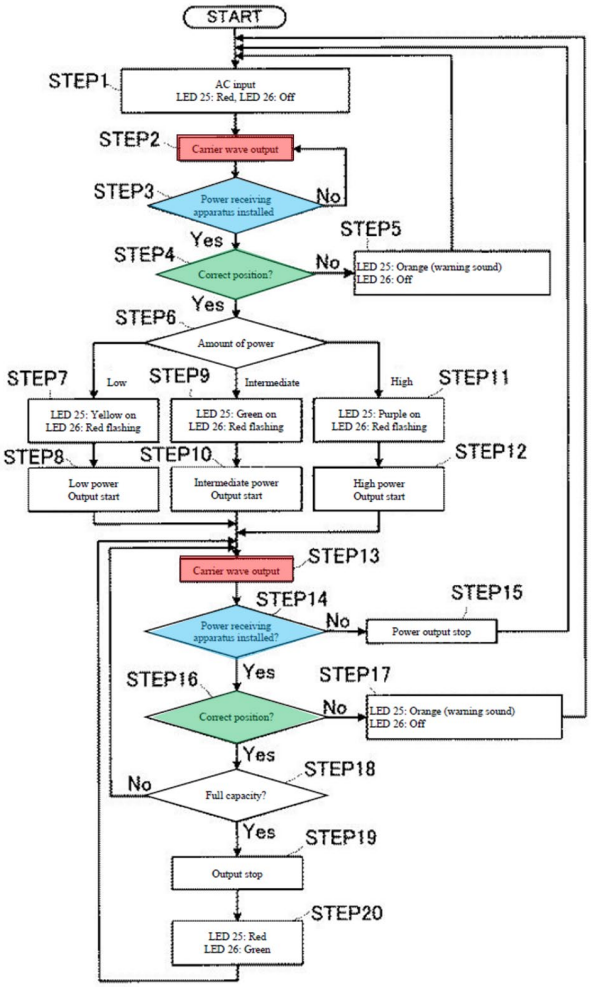

Similar features would have been provided/implemented in the above-discussed *Okada-Odendaal-Berghegger* system. (Ex. 1002, ¶172.) Thus, when operated as discussed for limitation 1(c)(2), the drive circuit(s) in the modified system would have provided power to "**capable**" portable device(s) "**when present and near the one or more primary coils**." (*Id.*)

d) one or more sense circuits to monitor the current through the one or more primary coils to sense communications from the one or more receiver coils; and

The *Okada-Odendaal-Berghegger* combination discloses/suggests this limitation. (Ex. 1002, ¶¶173-179; §§IX.A.1(a)-(c).)

Limitation 1(g) recites "**sens[ing]** [a response from the receiver circuit(s)] **via the one or more sense circuits as a modulation** of one or more primary coil currents." (*Infra* §IX.A.1(g).) In *Okada*, PTM10 transmits a carrier wave signal to PRM40, resulting in PDA3 to generate/send a modulated signal including device information back to PTM10 via coils 41 and 19. Circuit 35 "demodulates modulated signals included with the voltage from" primary coil 19 (Ex. 1005, ¶0042), and the information is evaluated by power transmission capability evaluating circuit 36, power amount evaluating circuit 37, full capacity evaluating circuit 38 as part of power transfer operations. (Ex. 1005, FIG. 3, ¶¶0060-0077); §IX.A.1(a)-1(c)(3); Ex. 1002, ¶174.) Thus, demodulating circuit 35 is an example of "**one or more**

sense circuits" given it receives/demodulates a modulated response signal from PRM40 via coil 19. (Ex. 1005, FIG. 2, ¶¶0050, 0064, 0069, 0076; Ex. 1002, ¶174.)

Okada's teachings are also consistent with PO's litigation assertions, which points to a demodulator or the like for the claimed "**one or more sense circuits**." (Ex. 1018, 22-24 (alleging accused device includes "a **demodulator** as relevant to this part of the claim," where "[t]he **demodulator** senses current modulation in the charger coil to detect a communication from the receiver…"), 24-25 ("detection of communications by the transmitter by way of current **modulation**"), 36, 54.)[11]

Okada explains that the modulation method may be based on "periodic intensity modulation of a carrier wave and may use a phase modulation method to express 0/1 information via phase change information of a signal." (Ex. 1005, ¶0058.) However, to the extent such sense circuit and current monitoring features like that claimed is not disclosed, a POSITA would have found it obvious to modify/use circuit 35 to monitor/detect the current of the waveform through the primary coil(s) to sense/detect communications from the receiver coil(s). (Ex. 1002, ¶175.) Indeed, modulating/demodulating a waveform (as discussed in *Okada*) and sensing communications based on an inherent property of the waveform (e.g.,

[11] Petitioner does not concede any feature in the accused instrumentalities meet this or any claim limitation.

current) in order to detect/sense/process information contained therein would have been one of "a finite number of identified, predictable solutions." *KSR* at 421. (Ex. 1002, ¶176.) Thus, a POSITA would have been motivated to configure the modified *Okada* system to provide current modulation/demodulation-type techniques/technologies (including current sense circuit(s)) to facilitate (and sense) the communication of information from the secondary side, consistent with that known in the art. (Ex. 1002, ¶¶176-178; Ex. 1056, Abstract, 2:7-9, 2:38-44, 4:21-34, 5:12-14, 6:12-33; Ex. 1057, 9:20-24, 15:16-21, 21:21-22:3, FIGS. 1-3, 11-13; Ex. 1058, Abstract, FIGS. 1, 3A-8, 3:25-4:35, 5:27-7:23, 10:22-24, 10:25-12:17; *infra* §IX.A.1(g).) (*See also* Ex. 1001, 23:38-45) (discussing "current modulation" in context of conventional technologies, which supports that such features were known); Ex. 1063; Ex. 1002, ¶¶176-178.)

Indeed, *Okada* describes verifying PDA3's presence by measuring intensity of the signal(s) communicated via primary coil(s) 19 and secondary coil 12. (Ex. 1005, FIGS. 4(a)-4(b), ¶¶0066-0068, 0074-0076, FIG. 8 (current sensor 91), 0110 ("**current measuring sensor**" measuring current "through the primary-side coil 19" when PDA3 "is in proximity" of cradle 4), 0111.) Thus, a POSITA would have found it obvious to configure/implement such current sensing/modulation/demodulation features in the *Okada-Odendaal-Berghegger* system for detecting communications of the information signal (*e.g.*, device

capability code) when received via coil 19 so that it is timely/properly recognized, demodulated, and used to verify that PDA3 is "placed in a correct position" and "capable of data transmission and reception." (*Id.*, ¶0080, FIGS. 3, 8, 4(a)-4(b), ¶¶0081-0082; Ex. 1002, ¶178.) A POSITA would have been motivated to implement such a modification in light of *Okada*'s teachings, *e.g.*, using signal intensity and sensed current in coil 19 for determining/verifying PDA3 presence, and state-of-art knowledge (as exemplified above). A POSITA would have considered various ways of configuring the modification, such as configuring the "sense circuit(s)" associated with current sensors 91, demodulation circuit 35, and/or other components to allow PTM10 to monitor the current through coil(s) 19 to sense communications from PRM40 via coil 41, consistent with known current modulation/demodulation techniques. (Ex. 1002, ¶178.)

A POSITA would have had the requisite skills and rationale to design/implement such "**sensor circuit(s)…**" and related current modulation/demodulation-type features in the *Okada-Odendaal-Berghegger* system, and done so with a reasonable expectation of success given the teachings of *Okada* and the knowledge of such a POSITA at the time. (Ex. 1002, ¶179.) Especially since such modification would have involved applying known technologies/techniques (as discussed above) to predictable yield an inductive power transfer system that senses when communications are received by coil 41 of PRM40

in the *Okada-Odendaal-Berghegger* system. (*Id.*; *infra* §§IX.A.1(e)-(l).) *KSR*, 550 at 416.

e) one or more communication and control circuits including one or more microcontrollers coupled to the one or more drive circuits and the one or more sense circuits that detect communications through the one or more sense circuits via the one or more primary coils and control the one or more drive circuits to control the powering or charging of the one or more compatible portable devices;

The *Okada-Odendaal-Berghegger* combination discloses/suggests this limitation. (Ex. 1002, ¶¶180-185.)

As explained, circuit 33 provides a carrier wave to PRM40 that causes responsive device information from circuit 47 of PRM40 via coils 41-19 to be received/processed by demodulator 35. (§§IX.A.1(c)-(d); Ex. 1005, ¶¶56-57, 0062-0064.) Evaluation circuits 36-38 "perform various decision-making processes based on information included in the signal demodulated by the demodulating circuit 35." (Ex. 1005, FIG. 2, ¶0042, FIG. 3, ¶¶0060-0077.) Those circuits control power transmission processes (FIG. 3) by providing signals to circuit 24 that controls/selects switches 21/22/23 (part of "**drive circuit[]**"). (Ex. 1005, FIG. 3, ¶¶0057-0076; §§IX.A.1(a)-(c).) Circuits 36-38 also provide a signal to switching control 61 (Ex. 1005, ¶0045) that determines whether "data can be **transmitted and received**" (*id.*, ¶0081, ¶¶0082-0085) and determines whether PDA3's charge capacity exceeds a "minimum capacity" for it to transmit/receive data (*id.*, ¶¶0082-

0089, FIG. 6). Circuits 36-38 additionally control LEDs 25-26 that communicates charging status to a user. (*Id.*, ¶¶0041, 0053-0055, 0061, 0069-0072, 0077, FIG. 5; Ex. 1002, ¶181.)

Thus, one or more circuits 36/37/38 and oscillation circuit 33 collectively disclose one example of "**one or more communication and control circuits** [FIG. 2, yellow below]…**coupled to the one or more drive circuits** [*e.g.*, §IX.A.1(c)(1)] **and the one or more sense circuits** [§IX.A.1(d), pink]" that "**detect communications through the one or more sense circuits** [magenta] **via the one or more primary coils** [§IX.A.1(d)]" and "**control the one or more drive circuits** [*e.g.*, §IX.A.1(c)(1)] **to control the powering or charging of the one or more compatible portable devices** [§§IX.A.1(a)-(d)]" as claimed. (*Supra*; Ex. 1002, ¶182; Ex. 1005, FIG. 2; §§IX.A.1(a)-(d).) Other components may also be included in such claimed "**communication and control circuit(s)**," *e.g.*, switching controller 61, and/or "switching controller 73" in the multi-coil arrangement of FIG. 7 "system," (Ex. 1005, FIG. 7 (annotated below), ¶¶0094-0115; §IX.A.1(i).)

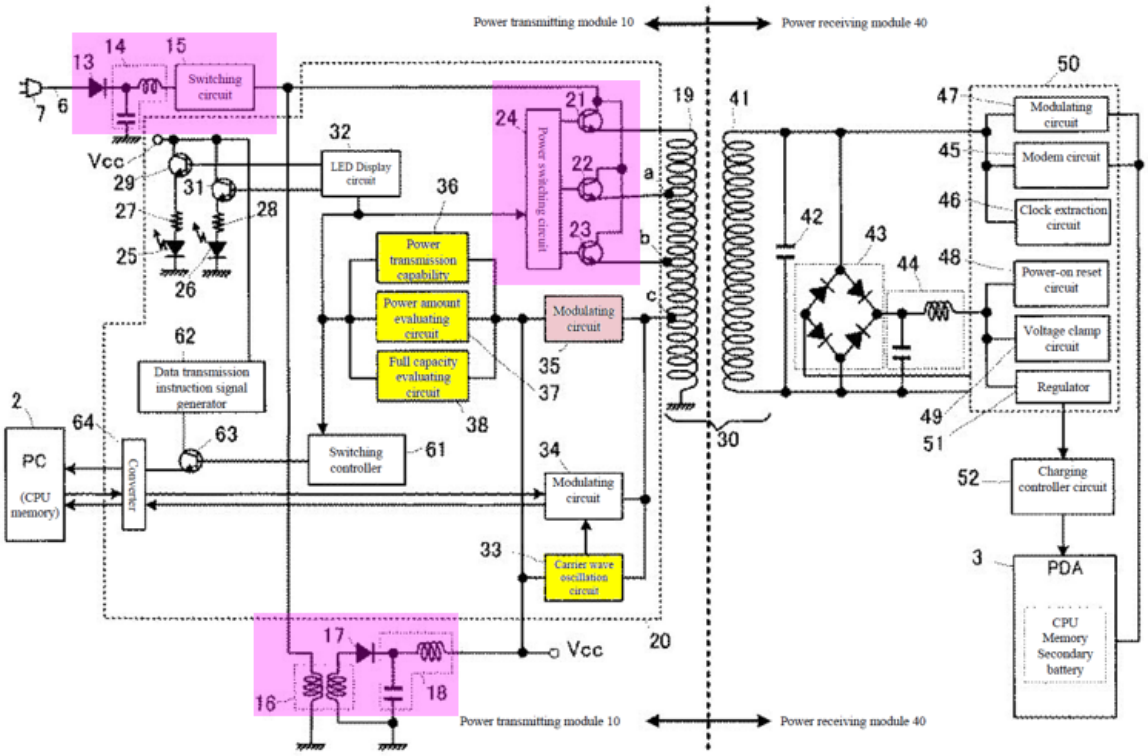
Power transmitting module 10
Power receiving module 40
Switching circuit
LED Display circuit
Power switching circuit
Power transmission capability
Power amount evaluating circuit
Full capacity evaluating circuit
Modulating circuit
Data transmission instruction signal generator
Switching controller
Carrier wave oscillation circuit
PC
(CPU memory)
Converter
Vcc
Modulating circuit
Modem circuit
Clock extraction circuit
Power-on reset circuit
Voltage clamp circuit
Regulator
Charging controller circuit
PDA
CPU
Memory
Secondary battery

FIG. 7

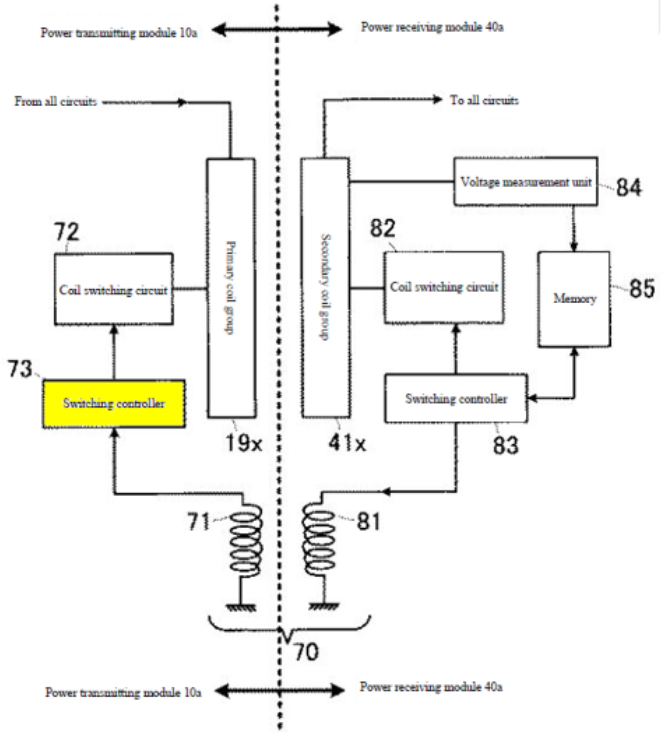
Power transmitting module 10a
Power receiving module 40a
From all circuits
To all circuits
Voltage measurement unit
Coil switching circuit
Primary coil group
Secondary coil group
Coil switching circuit
Memory
Switching controller
Switching controller

Such inter-relationships would have enabled the "**communication and control circuit(s)**" implemented in the modified *Okada-Odendaal-Berghegger* system to "**detect communications**" and "**the one or more drive circuits to control**" the powering/charging of PDA3 like that claimed and explained above. (Ex. 1002, ¶183; §IX.A.1(c)(1).) A POSITA would have been motivated to configure the above-identified "**communication and control circuits**" in the *Okada-Odendaal-Berghegger* system to convert the power demand information received from demodulator 35 into a control signal for controlling the operating frequency of the modified "**drive circuit(s)**" to adjust power delivery during charging/powering operations, as explained. (§IX.A.1(c); Ex. 1002, ¶183.)

Circuits 33, 36-38 may be "configured on the same **IC chip**," *e.g.*, "**IC** 20," which includes other components like "controller" 61, 73. (Ex. 1005, ¶¶0046, 0081-0084, FIGS. 2, 7.) Such circuitry would have been understood as compact integrated circuitry designed to perform/given certain operations in PTM10, which is consistent with a "**microcontroller**" as understood by a POSITA in context of the '500 patent. (Ex. 1002, ¶184; Ex. 1001, 23:28-43, 38:29-34 (exemplifying an "IC" or "chip" as a "microcontroller").) The same is true where "switching controller 73" is part of such "**communication and control circuit(s)**" since it sends "instructions" to control the switching to select specific primary coils. (Ex. 1005, ¶¶0095, 0101; §IX.A.1(i).)

To the extent PO argues/or it is determined the claimed "microcontroller" requires a processor or the like, it would have been obvious to configure PTM10 in the *Okada-Odendaal-Berghegger* to include such features because it would have been a foreseeable application of known technologies/techniques to use in PTM10, which uses integrated circuit(s) to perform "control[ler]"-type operations. (*Supra*; Ex. 1002, ¶185; Ex. 1006, 5:65-6:59, FIGS. 4-5 (controller 40); Ex. 1024, 6:60-7:14 (inductive power source including "microprocessor controller 308" for controlling modes of power supply operation), FIG. 3.) A POSITA would have appreciated implementing well-known processor-based microcontroller technology with PTM10 would have been an obvious variation to how the module can perform similar functionalities, while providing known programmable functionalities. A POSITA would have had the skills and rationale to implement such a modification, and given the known technology and *Okada*'s teachings, would have done so with a reasonable expectation of success. (Ex. 1002, ¶185.)

f) wherein the one or more communication and control circuits:

operate the one or more drive circuits near a first resonant frequency of a circuit formed by a primary coil and a drive circuit and a receiver coil and a receiver circuit of a compatible portable device when nearby;

The *Okada-Odendaal-Berghegger* combination discloses/suggests this limitation. (Ex. 1002, ¶¶186-189; §§IX.A.1(a)-(e).) As discussed for limitation

1(b), *Okada* discloses a receiver coil 41 and receiver circuit(s). (§IX.A.1(b).) As discussed for limitations 1(c), 1(e), the above-discussed communication/control circuit(s) in the *Okada-Odendaal-Berghegger* system would have "operate[d] the drive circuit(s)" by *e.g.*, providing control signals to circuit 24 for selecting one of switches 21/22/23 at the **onset** of a charging process, and/or by providing control signal(s) based on received/demodulated device power demand information to control the operation frequency of the "drive circuit(s)" (*e.g.*, reconfigured switching circuit 15, etc.) **during** the charging process in the modified system. (§§IX.A.1(c)-(e); Ex. 1002, ¶187.) For similar reasons, and in view of *Berghegger*'s teachings, a POSITA would have been motivated and found obvious to configure the communication/control circuit(s) to operate the drive circuit(s) "near a first resonant frequency" of a circuit formed by primary coil 19 and the drive circuit components, and receiver coil 41 and the identified "receiver circuit" of PDA3, like that claimed. (*Id.*)

Berghegger teaches that when a load is placed on the secondary side (*e.g.*, PDA3 placed on cradle 4), "the oscillation frequency [of drive circuit 40] **approaches the resonant frequency**, whereby the transmitted power increases." (Ex. 1006, 4:32-40.) A POSITA would have understood that such "resonant frequency" is that of a circuit formed by primary-side components (including primary coil and drive circuitry (including resonant capacitor)) and secondary-side

components (including secondary coil and receiver circuitry). (Ex. 1002, ¶188.) *Berghegger* explains that **when there is no load** to the secondary side, the resonance frequency is that of a circuit "formed by the inductor L_P on the primary side and the resonant capacitor C_P." (Ex. 1006, 4:27-32.) **When a load exists on the secondary side**, the resonant frequency factors into the impedance of the components on the secondary side. (*Id.*, 4:32-35 ("A load on the coil on the secondary side results in a change in impedance of the coil L_S on the secondary side and thus in an off-resonance setting of the resonant circuit towards higher frequencies.").) A POSITA would have understood the above-discussed modified *Okada* system (§§IX.A.1(b)-(e)), which would have included similar features/functionalities (*e.g.*, frequency adjustment to driver circuitry for adjusting power delivery based on power demand information) and thus predictably resulted in the communication/control circuit(s) being configured to operate the "drive circuit(s)" of the *Okada-Odendaal-Berghegger* system (§IX.A.1(c)) "**near a first resonant frequency….**" like that claimed. (Ex. 1002, ¶188.) A POSITA would have had the same rationale, skills, knowledge, and expectation of success as explained above for limitations 1(c), 1(e), to configure the communication/control circuit as discussed above. (§§IX.A.1(c), 1(e); Ex. 1002, ¶188.)

Furthermore, as discussed for limitation 1(c)(3), *Okada* discloses that power is delivered only when a "compatible" portable device is properly

placed/proximate/aligned to cradle 4/primary coil 19. (§IX.A.1(c)(3).) For similar reasons, the communication/control circuit(s) in the above-discussed *Okada-Odendaal-Berghegger* system would have operated the "drive circuit(s)" when [the device] is "**nearby**," as claimed. (*Id.*; Ex. 1002, ¶189.)

> **g) switch the one or more primary coils at a frequency and power level sufficient to transfer power to one or more of the receiver units when near the one or more primary coils for a sufficiently long period of time to activate the one or more receiver circuits and to receive a response from the one or more receiver circuits via the one or more receiver coils which the one or more primary coils sense via the one or more sense circuits as a modulation of one or more primary coil currents;**

The *Okada-Odendaal-Berghegger* combination discloses/suggests this limitation. (Ex. 1002, ¶¶190-195; §§IX.A.1(a)-(f).)

As explained, the *Okada-Odendaal-Berghegger* system discloses/suggests that "the one or more communication and control circuits" (*e.g.*, circuits 36-38) "operate the one or more drive circuits near a first resonant frequency of a circuit…when nearby." (§§IX.A.1(e); IX.A.1(c)(1).) *Berghegger* teaches using a control signal (U_C) provided to a drive circuit to adjust the switching frequency of switches (S1-S2) that drive a primary coil based on device power demand to ensure "a sufficient amount of electrical power is always available on the secondary side." (§IX.A.1(c)(1); Ex. 1006, 2:28-34, 3:51-6:37, FIGS. 1(b), 2, 4; Ex. 1002, ¶191.)

For reasons similar to that explained above, the *Okada-Odendaal-Berghegger* system would have been configured to provide a control signal to the modified switching circuitry 15 (part of the "drive circuit(s)") to adjust the switching frequency of FET switches, as modified and similar to that disclosed in *Berghegger* (*e.g.*, switches S1/S2), to drive coil 19 (at the switched frequency and power level) based on received PDA3 power demand information (*e.g.*, part of the information sent by PRM40 as discussed by *Okada*) to ensure sufficient power is provided to PDA3 (and its "receiver units" (§IX.A.1(b)) as its load changes during power/charge operations, when properly positioned in cradle 4. (§IX.A.1(c)(1), IX.A.1(e); Ex. 1002, ¶192.) Thus, the above-discussed *Okada-Berghegger* combination discloses and/or suggests "**switch[ing] the one or more primary coils at a frequency and power level sufficient to transfer power to one or more of the receiver units when near the one or more primary coils**." (Ex. 1002, ¶192.)

Further, *Okada* discloses the switching signal from circuit 15 is converted to a V_{CC} to power components in PTM10, including circuit 33, which generates "a prescribed carrier wave at a certain interval" that is sent to PRM40. (Ex. 1005, ¶¶0039, 0056-0057; §§IX.A.1(a)-(c).) A DC signal "generated by a carrier wave provided by the carrier wave oscillating circuit 33 can be **used as a driving power source for the clock extracting circuit 46 and the modulating circuit 47**" in the "**receiver circuit(s)**" of PRM40. (Ex. 1005, ¶0058.) As explained, even during

power transmission, the carrier wave is periodically transmitted to PRM40, and, based on the received device information, PTM10 determines whether PDA3 remains and/or is properly positioned. (Ex. 1005, FIG. 3, ¶¶0074-0075; §IX.A.1(c)(3).) Only when properly positioned does PDA3 receive power until fully charged, which is determined using the "periodically transmitted" carrier wave. (Ex. 1005, FIG. 3, ¶0074, 0076; §IX.A.1(c)(3).) A POSITA would have thus understood PDA3 has to be properly placed near primary coil 19 for at least a sufficient period of time to allow the periodic carrier wave and responsive device information to be communicated in order to facilitate powering/charging of the device. (Ex. 1002, ¶193.)

Likewise, a POSITA would have found obvious to modify the *Okada-Odendaal-Berghegger* system to have similar features, where the above-discussed carrier wave–device information communications, and resulting switching of primary coil(s) 19 at a frequency and sufficient power level transferred to PRM40's receiver unit would have been performed at "**a sufficiently long period of time to activate the one or more receiver circuits**" and to receive responsive device information from modulating circuit 47 of PRM40 via coil 41 ("**to receive a response from the one or more receiver circuits via the one or more receiver coils**"). (Ex. 1002, ¶194; §§IX.A.1(b)-(e); Ex. 1005, ¶¶56-57, 0062-0064.) Moreover, the analysis above for limitation1(d) demonstrates how the modified

system would have been configured to use known current modulation/demodulation-type techniques/technologies), such that coil 19 would sense communication(s) (device information) from PRM40, thus resulting in the "primary coil(s)" sensing the "response" from the receiver circuits/coils via "sense circuit(s)" as a modulation of current in the primary coil(s), like that recited in limitation 1(g). (§IX.A.1(d); Exs. 1056-1058, 1063; Ex. 1002, ¶¶194-195.)

> **h) detect, through the one or more sense circuits, communications from the one or more receiver units through the one or more receiver coils including information corresponding to one or more voltages at one or more outputs of the one or more receiver rectifier circuits induced by the one or more primary coils and the one or more receiver coils and information associated with the one or more portable devices and/or receiver units to enable the one or more communication and control circuits to identify the one or more portable devices and/or receiver units and to determine any one or more appropriate charging or powering algorithm profiles therefor;**

Okada-Odendaal-Berghegger in view of *Black* discloses/suggests this limitation. (Ex. 1002, ¶¶196-206; §§IX.A.1(a)-(g).)

As discussed, a POSITA would have been motivated to configure the *Okada-Odendaal-Berghegger* system to implement closed-loop feedback controlled frequency switching power delivery based on device information to provide appropriate power to accommodate changes in PDA3's load during power/charging operations. (§IX.A.1(c)(1).) For reasons explained, the *Okada-Odendaal-*

Berghegger system would have "**detected, through…sense circuit(s), communications**" from the "**receiver unit**" through "**receiver coil**" 41 (§IX.A.1(b)) that includes information corresponding to PDA3 (*e.g.*, device compatibility/capability, power level, and charge status information) ("**information associated with the one or more portable devices and/or receiver units**") used to facilitate power/charge operations, like that described by *Okada*. (§§IX.A.1(d)-(g); *see also* §§IX.A.1(a)-(c); Ex. 1005, FIG. 3, ¶¶0056-0057, 0059-0077).) Also explained above, and consistent with *Okada*'s operations, "code indicating that a device is capable of receiving power" processed by PTM10 would have been used by ("**enable**[d]") circuit 36 in the "**communication and control circuit(s)**" of the *Okada-Odendaal-Berghegger* system (§IX.A.1(e)) "**to identify**" PDA3 (or its receiver unit (§IX.A.1(b)) because circuit 36 uses such information to determine whether a device capable of receiving power is properly positioned with the charger to maintain or initiate power delivery. (§§IX.A.1(c)-(g); Ex. 1005, ¶¶0064-0077, FIG. 3; Ex. 1002, ¶197.)

Moreover, similar to *Okada*, *Berghegger* describes communicating power demand information associated with a receiving device load. (§IX.A.1(c).) *Berghegger* teaches how power demand information at the load can be **measured as a voltage at the output of a receiver rectifier circuit**, which is induced by the signals communicated from the primary coil to the secondary coil. For example, a

detection means 42 measure the voltage (**pink** below) rectified by rectifier GL (**blue**) across the load R_L or batteries (**red** below) that is fed back to the primary-side and used as a control signal U_C to allow controller 40 to adjust the switching frequency of the primary coil via switches S1-S2 (FIG. 1(b)). (Ex. 1006, FIGS. 1(b), 2, 4-5, 5:65-6:37.) As shown in FIG. 5 (below), the "**signal about the power demand on the secondary side [may be] transmitted via the two inductors L_P and L_S to the primary side**," *e.g.*, a voltage signal measured by detection means 42 at the output of rectifier GL or across the battery/load. (*Id.*, 6:16-20, 6:50-53.) (Ex. 1002, ¶198; §IX.A.1(c)(1).)

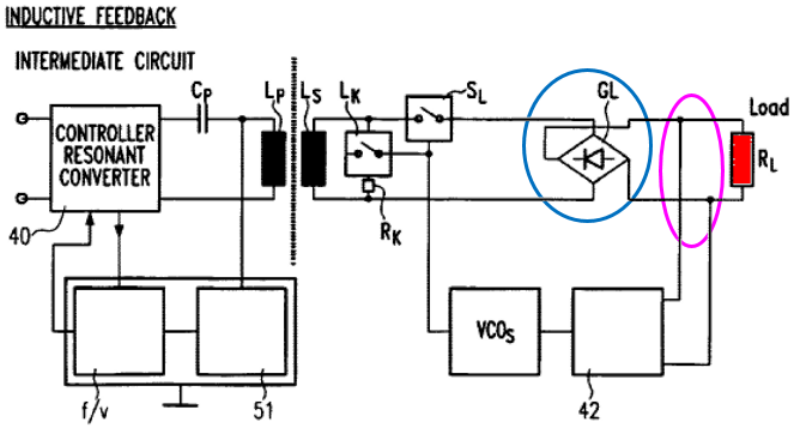

In light of such teachings, in addition to the reasons discussed above (§§IX.A.1(c)-(g)), a POSITA would have found it obvious to configure the *Okada-Odendaal-Berghegger* system such that the information communicated from PRM40 to PTM10 includes information corresponding to PDA3 (*e.g.*, *Okada*'s device capability/compatibility, charge status) and power demand information

reflecting the **voltage at the output of the rectifier** 43 (which provides the DC signal to charge/power PDA3) (similar to that taught/suggested by *Berghegger*) to facilitate the power adjustment features discussed above. (§§IX.A.1(c)-(g); Ex. 1002, ¶199.) A POSITA would have had similar rationale, skills, and expectation of success as that discussed above for the modifications involving *Berghegger*'s teachings. (*Id.*; §§IX.A.1(c)-(g).) Indeed, like above, configuring the *Okada-Odendaal-Berghegger* system as discussed above would have involved the use of known technologies/techniques (*e.g.*, voltage detection/measuring mechanism and inductive power/data transfer mechanism to adjust power delivery based on device power information), like those taught/suggested by *Okada-Berghegger*. (Ex. 1002, ¶199.)

While *Okada-Berghegger* disclose communicating device information for adjusting charging/powering operations, neither expressly "**determin[ing] any charging or powering algorithm profile(s)**" based on such information. However, a POSITA would been motivated, and found obvious, to configure the *Okada-Odendaal-Berghegger* system such that PTM10 uses the device information from PRM40 to determine a charging/powering algorithm profile to improve and/or complement the power delivery control features discussed above. (Ex. 1002, ¶200.)

A POSITA would have been motivated to implement such a modification given *Okada* discloses using the device information to determine a power level

(low/intermediate/high) based on power requirements of the portable device. (Ex. 1002, ¶201; Ex. 1005, FIGS. 3, 5, ¶¶0069, 0073-0076, 0090.) Moreover, it was known to use charging algorithm profile(s) to control battery charging in mobile devices (*e.g.*, to avoid overcharging). (Ex. 1002, ¶201.) Indeed, the '500 patent acknowledges "[m]ost mobile devices today already include a Charge Management IC…to control charging of their internal battery." (Ex. 1001, 37:19-17.) Consistent with such knowledge, *Black* describes communicating charging profile information for controlling charging operations in an inductive power transfer system having similar features like those of *Okada-Berghegger*.

Black discloses inductive charging a portable device battery, where the battery includes a transceiver for communications with a charger. (Ex. 1007, Abstract, FIGS. 1-2, ¶¶0002, 0013-0017.) As shown in FIGS. 1-2 (below), a battery 100/200 includes a charging coupler 108/208 coupled to cell 104/204 through charging circuit 110/210, and communications coupler 112/212. (*Id.*, ¶¶0015, 0017.)

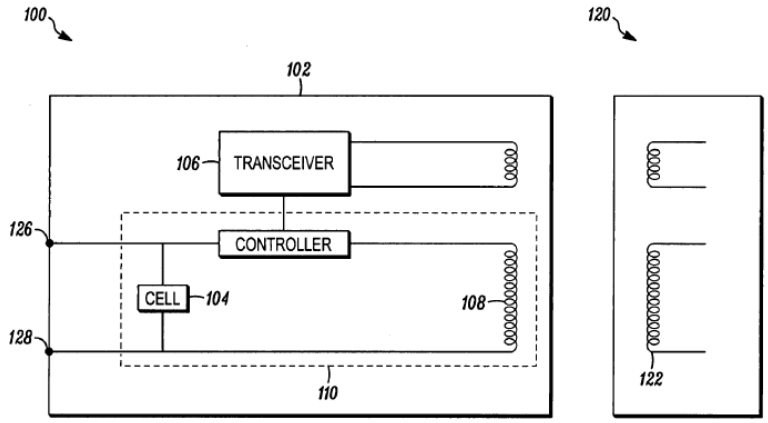

FIG. 1

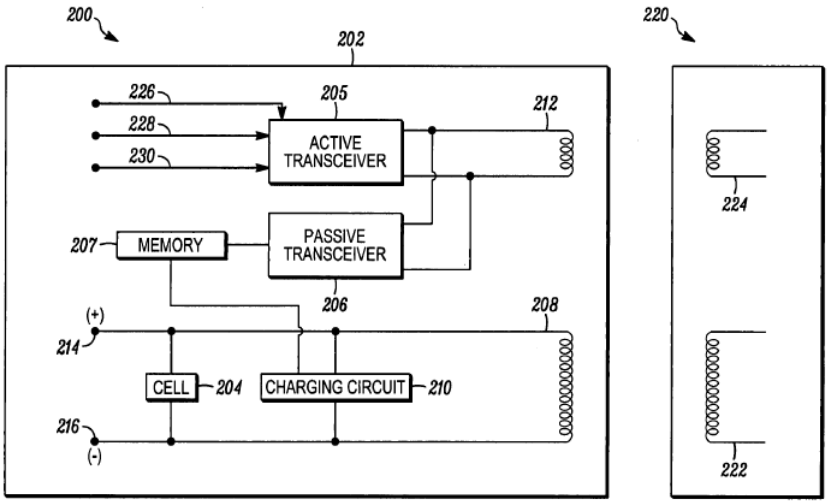

"The **first coil 212 may be a portion of the second coil 208**." (*Id.*, FIG. 2, ¶0018.) When the battery is placed in range of the inductive charger, communications between them "may take place and inductive charging can occur." (*Id.*, ¶0019; Ex. 1002, ¶¶98-100, 202.)

Black is in the same technical field as *Okada-Berghegger*, and the '500 patent, given it describes an inductive power transfer system where information is

communicated between a primary and secondary-side. (§§IX.A.1(a), IX.A.1(c); Ex. 1007, FIGS. 1-4, ¶¶0002, 0005, 0012-0028.) Like *Okada-Berghegger*, *Black* discloses features that were reasonably pertinent to one or more particular problems the inventor for the '500 patent (and POSITA) was trying to solve. (Ex. 1001, 10:43-51; Ex. 1007, Abstract, ¶0021; Ex. 1002, ¶203.) Therefore, a POSITA would have considered the teachings of *Black* when looking to design/implement the *Okada-Odendaal-Berghegger* system. (*Id.*)

Black additionally discloses a procedure for "device identification and charging," where battery information is requested/received upon detecting the presence of the battery. (Ex. 1007, FIG. 3 (below), ¶0020.)

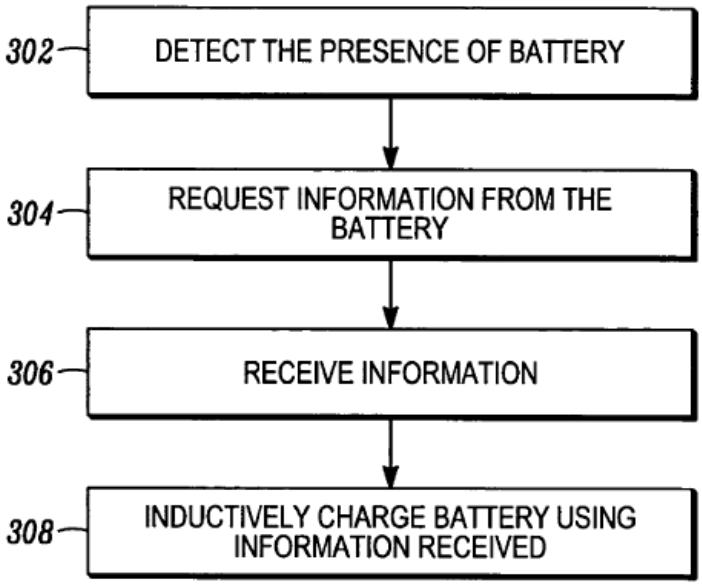

The information may include, *e.g.*, device ID and additional information, *e.g.*, "the type of device the battery 100 is coupled to, encryption information, **battery**

characteristics or **charging profile**." (*Id.*, ¶0021.) Charger 120 inductively charges the battery based on the received information. (*Id.*, ¶0022; Ex. 1002, ¶204.)

In light of *Black,* a POSITA would have been motivated and found obvious to modify the *Okada-Odendaal-Berghegger* system to include charging algorithm profiles associated with PDA3's battery ("**appropriate charging or powering algorithm profiles**") with the device information communicated by PRM40 ("**communications from the one or more receiver units"**) and used by circuits 36-38 (part of the "**communication and control circuit(s)**") to enhance the control of power to PDA3 as described by *Okada-Berghegger*. (§§IX.A.1(c)-(g); *supra*.) A POSITA would have appreciated having charging algorithm profile information would have allowed the modified PTM10 to accurately/properly adjust the power suitable for each specific battery/device determined to be capable of, and properly positioned, to receive such power, as discussed. (*Id.*; Ex. 1002, ¶205.)

A POSITA would have had reasons to consider and implement such features given it was known different types of batteries/portable devices have different power/charge characteristics/algorithm-profiles. (Ex. 1007, ¶0003; Ex. 1037, 1:56-2:6, 2:18-19, 6:51-7:2, 7:36-53, FIGS. 4A-4C; Ex. 1039, Abstract, 3:23-35, FIG. 1, 5:20-34; Ex. 1002, ¶206.) As such, a POSITA had the requisite motivation, skills, knowledge to implement, and reasonable expectation of success in achieving, the above-discussed modification, especially since it would have involved applying

known technologies/techniques (*e.g.,* charging algorithms profiles to control charging) to yield the predictable result of providing an inductive power/charging system that uses specific device information to control power transfer, consistent with the features disclosed by *Okada-Odendaal-Berghegger-Black*. (*Id.*) *KSR*, 550 at 416-18.

i) for each portable device, determine the primary coil electromagnetically most aligned with the receiver coil of the portable device;[12]

The *Okada-Odendaal-Berghegger-Black* combination discloses/suggests this limitation. (Ex. 1002, ¶¶207-210; §§IX.A.1(a)-(h).)

Okada discloses providing power inductively when primary coil 19 is properly-aligned with a PDA3 (and secondary coil 41) where appropriate magnetic coupling exists. (§§IX.A.1(a)-(h).) Like in *Okada*, power transfer would only occur when such alignment occurs in the *Okada-Odendaal-Berghegger-Black* system. Thus, the "**communication/control circuit(s)**" in the system (§§IX.A.1(e)-(h)) would have likewise been configured to "**determine the primary coil**

[12] Limitation 1(b) recites "**one or** more **primary coils**" (§IX.A.1(b)), and thus, the modified *Okada* system when implemented with a single primary coil magnetically coupled to a receiver coil of a properly aligned PDA3 (as discussed above) meets this limitation as explained herein.

electromagnetically most aligned with the receiver coil of the portable device" in order to drive the coil 19 (and FET switches, etc.) to transfer power consistent with that disclosed by *Okada* (where power transmission efficiency is proportional to coil alignment). (*Id.*; Ex. 1005, FIGS. 4(a)-(b), ¶¶0066, 0067, 0068-0069 (evaluating positional offset amount); §IX.A.1(c)(3); Ex. 1002, ¶¶208-209.)

Likewise, in the multi-coil "system" configuration (FIG. 7 (coil group 19x and 41x), switching controller circuitry (*e.g.*, 73) in PTM10 can select a coil from primary coils group 19x based on detected voltage values so that a pair of primary and secondary coils "having a highest power transmission efficiency" (*e.g.*, least misalignment) is used for power transfer. (§IX.A.1(a); Ex. 1005, ¶0105; *id.*, ¶¶0017, 0094-0115, Claims 9-10.) Thus, for similar reasons explained, the "**communications/control circuit(s)**" in the above-discussed *Okada-Odendaal-Berghegger-Black* system (§§IX.A.1(e)-(h)) employing coil groups like that contemplated by *Okada* (FIG. 7) would have similarly been configured with switching controller circuitry with the "**communications/control circuit(s)**" (§IX.A.1(e)) that "**determine[s] the primary coil electromagnetically most aligned with the receiver coil of the portable device**." (§§IX.A.1(e)-(h); Ex. 1002, ¶210.)

j) drive the one or more FET switches associated with the most aligned one or more primary coils;

The *Okada-Odendaal-Berghegger-Black* combination discloses/suggests this limitation. (Ex. 1002, ¶¶211-212; §§IX.A.1(a)-(i).)

As explained, the modified *Okada* system would have been configured to provide power when the most aligned primary coil 19 with the receiver coil 41 is determined (whether in a single coil 19 (*e.g.,* Ex. 1005, FIG. 2) or group coil 19x (*id.*, FIG. 7) system arrangement). (§IX.A.1(i); Ex. 1002, ¶212; Ex. 1005, ¶0069-0073; 0094-0115.) Consistent with that discussed for limitations 1(c)-1(h)), the *Okada-Odendaal-Berghegger-Black* system would have been configured so once proper coil alignment was determined ("**most aligned primary coil(s)**"), power transfer operations would proceed, where the FET switches (as modified and similar to that disclosed in *Berghegger* (*e.g.*, switches S1/S2)), associated with such aligned primary coil(s) would have been driven according to the switching frequency discussed above for limitation 1(g). (§§IX.A.1(c), IX.A.1(g), IX.A.1(i); Ex. 1002, ¶212.) Thus, for reasons similar to that explained above regarding *Okada-Odendaal-Berghegger-Black* (§§IX.A.1(c)-(i)), a POSITA would have been motivated, had the requisite skills, rationale, and expectation of success, (and thus found it obvious) to drive the FET switches like that claimed. (Ex. 1002, ¶212.)

k) periodically receive information corresponding to one or more output voltages or currents of the one or more receiver rectifier circuits via the one or more primary coils and the one or more sense circuits; and

The *Okada-Odendaal-Berghegger-Black* combination discloses/suggests this limitation. (Ex. 1002, ¶¶213-217; §§IX.A.1(a)-(j).)

As discussed for limitation 1(c)(3), "[e]ven after power transmission has begun," the carrier wave is "periodically transmitted" from PTM10 to PRM40 to determine whether PDA3 is properly positioned and whether it is fully charged. (Ex. 1005, ¶¶0074-0076, FIG. 3 (annotated below); §IX.A.1(c)(3); Ex. 1002, ¶214.)

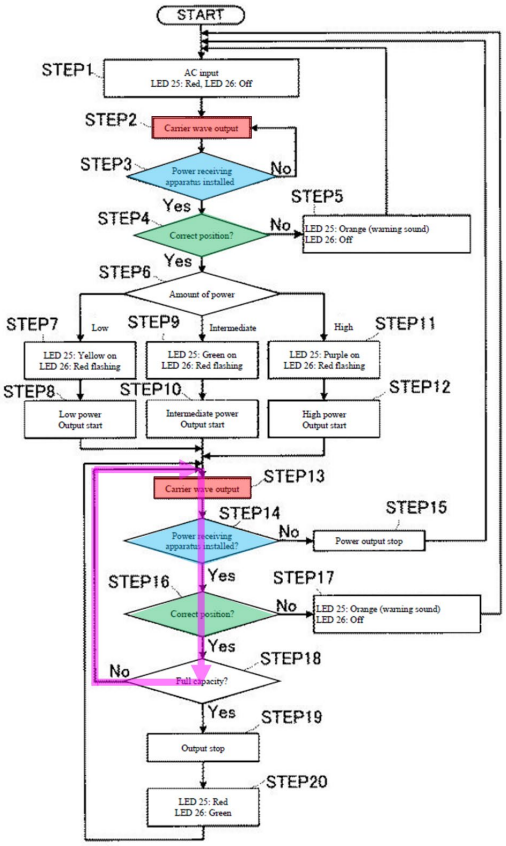

Likewise, consistent with *Okada*'s system (as modified), the "**communication and control circuit(s)**" in the *Okada-Odendaal-Berghegger-Black* system (§§IX.A.1(e)-(j)) would "**periodically receive**" the responsive device information provided by PRM40 via "**primary coil**" 19 (whether in a single coil 19 or in group coil 19x configuration (§§IX.A.1(i)-(j)) and demodulator 35 (*e.g.,* "**sense circuit(s)**" (§IX.A.1(d)) ("**via the one or more primary coils and the one or more sense circuits**"). (§§IX.A.1(e)-(j); Ex. 1005, ¶0064-0077, 0094-0115.) (Ex. 1002, ¶215.)

Moreover, as explained, the received responsive information in the modified *Okada* system would have included *e.g.*, "power consumption information," (§§IX.A.1(a)-(j); Ex. 1005, ¶0057).) A POSITA would have understood that "power consumption information" "**corresponds to the output voltage or current of the receiver rectifier circuit**" (*e.g.,* rectifier 43) because such "information" is used by PTM10 to determine the level of power for charging the portable device, which when received, corresponds to the level of voltage or current at the output of the rectifier 43 (that converts the received ac power signal to a DC signal used for charging the device). (*Id.*; Ex. 1005, FIG. 3, ¶¶0057, 0069-0072, Ex. 1002, ¶216.) For similar reasons explained, such information would have been received.

Additionally, consistent with that explained for limitation 1(h), in the *Okada-Odendaal-Berghegger-Black* system, the periodically received information would

have also included power demand information similar to that determined by *Berghegger*, such as voltages at output(s) of receiver rectifier circuit 43 that would have been used to generate a control signal used to adjust the frequency of the signal applied to the primary coil(s) 19 (and thus power transmission). (§§IX.A.1(h), IX.A.1(g), IX.A.1(i)-(j); Ex. 1006, 4:58-59, 5:65-6:29; Ex. 1002, ¶217.)

l) regulate in a closed loop feedback manner the one or more output voltages or currents of the one or more receiver rectifier circuits by adjusting the frequency or duty cycle of the one or more drive circuits during the charging or powering of the one or more portable devices.

The *Okada-Odendaal-Berghegger-Black* combination discloses/suggests this limitation. (Ex. 1002, ¶¶218-219.)

The analysis above demonstrates how/why a POSITA would have configured the *Okada-Odendaal-Berghegger* system to implement a closed-loop feedback control process where the "**one or more communication and control circuits**" (§§IX.A.1(e)-(f)) use device information received from PRM40 to control the disclosed "**drive circuit(s)**" during charging/powering by adjusting the frequency and/or duty cycle of the waveform applied to primary coil(s) 19 based on load variation information. (§§IX.A.1(c), 1(e), (g).) Also, for reasons explained for limitations 1(h) and 1(k), in the *Okada-Odendaal-Berghegger-Black* system, the load variation would have been measured as a voltage at the output of the receiver rectifier in PRM40, which is fed back to PTM10 with the power demand information

for adjusting the frequency and/or duty cycle of the "drive circuit(s)" during charging/powering of the portable device. (*Id.*; §§IX.A.1(h), IX.A.1(k); Ex. 1006, 4:58-59, 5:65-6:29.) Accordingly, for the reasons explained (*see* §§IX.A.1(a)-(b), IX.A.1(d)-(g), IX.A.1(i)-(j)), the *Okada-Odendaal-Berghegger-Black* combination discloses/suggests limitation 1(l). (Ex. 1002, ¶219.)

2. Claim 3

a) The system of claim 1, wherein the one or more drive circuits, primary coils and associated capacitors are designed to be driven in a Zero Voltage Switching or Zero Current Switching mode during inductive power transfer to a portable device.

The *Okada-Odendaal-Berghegger-Black* combination discloses/suggests this limitation. (Ex. 1002, ¶¶220-222; §IX.A.1.)

Berghegger discloses operating the disclosed drive circuit in a "ZVS (zero voltage switching)" mode. (Ex. 1006, 4:34-40.) Accordingly, for reasons similar to those discussed for claim 1, a POSITA would have considered these additional teachings from *Berghegger* when configuring/implementing the modified *Okada-Odendaal-Berghegger-Black* system and thus have been motivated, and found obvious to design the components in PTM10 to be driven in a ZVS mode to "avoid switching loses and high-frequency disturbances" as taught by *Berghegger* and known in the art. (Ex. 1002, ¶221.) A POSITA would have appreciated the benefits of ZVS-based designs, and would have had the skills, and reasons to

design/configure, for example, the FET switches of the "drive circuit(s)", and relayed circuitry/components to be driven in a ZVS mode to reduce noise in the switching signals provided by the switch(es). And given the primary coil(s) 19 and "capacitor(s)" (§IX.A.1(c)(1)) are driven by the switching signals in the *Okada-Odendaal-Berghegger-Black* system, a POSITA would have been motivated to design such components ("drive circuit(s), capacitors, coil(s) 19, etc.) to operate in such a mode to facilitate the known benefits of zero voltage switching. (Ex. 1002, ¶222.) A POSITA would have had the same rationale/skills and expectation of success in implementing such a design as discussed above in claim 1 for the combinations of *Okada-Odendaal-Berghegger-Black*. (§§IX.A.1(c); IX.A.1.)

3. Claim 9

a) The system of claim 1, wherein the one or more communication and control circuits can provide bi-directional digital communication between the one or more primary coils and the receiver coils for a verification process to ensure that a receiver unit that can be charged or powered by the system is present and to determine the voltage or power requirements of the receiver unit.

The *Okada-Odendaal-Berghegger-Black* combination discloses/suggests this limitation. (Ex. 1002, ¶¶223-230; §IX.A.1.) As discussed, in the modified *Okada* system, the "communication and control circuit(s)" would have communicated the carrier wave to PRM40 and in response, received the device information from

PRM40 via primary coil(s) 19 and receiver-side coils 41. (§§IX.A.1(d)-(l); *e.g.,* §IX.A.1(e); Ex. 1005, ¶¶0057-0076; Ex. 1002, ¶224.)

Also explained for limitations 1(c)-1(e), the modified *Okada* system would have included/performed features consistent with that described by *Okada*, where such exchange of information is used to determine/verify whether the portable device is capable of receiving power when positioned in cradle 4. (§§IX.A.1(c)(3) (*Okada*'s system detecting the presence/proximity/alignment of a device capable of being powered/charged), IX.A.1(d), IX.A.1(e); Ex. 1005, FIGS. 3, 7-8, ¶¶0056-76.) The *Okada-Odendaal-Berghegger-Black* system would have performed similar bi-directional communications for reasons explained to verify the presence/alignment of a capable portable device and to determine the voltage/power requirements of the device for adjusting power transfer operations. (§§IX.A.1(c)-(l), §IX.A.1(e); Ex. 1005, ¶¶0059-76; Ex. 1002, ¶225.)

However, while *Okada* does not expressly state that such "bi-directional communication is "**digital**," a POSITA would have found it obvious to modify the *Okada-Odendaal-Berghegger-Black* system to implement such "digital" communications in light of the additional teachings of *Odendaal*. (Ex. 1002, ¶226.)

In addition to that discussed for limitation 1(b), a POSITA would have appreciated that *Odendaal* discloses that signal/power transfer can be accomplished via magnetic coupling between charger and receiver coils. (Ex. 1008, Abstract, 2:1-

10, 2:65-3:5, 4:44-5:8.) In addition to charging "a radio, cellphone, and/or computer" (*id.*, 2:30-41), *Odendaal* explains that "**digital**" signals may be transmitted through the IOET for uploading/downloading "**digital information**" (*id.*, 2:41-44). (Ex. 1002, ¶227.) A POSITA would have also appreciated that *Okada* discloses transmitting data from PC2 to PDA3. (Ex. 1005, FIG. 6, ¶¶0078-0089.) To facilitate this, switching control unit 61 and converter 64 components in PTM10 allow a transmission instruction signal to be communicated to PC2 in "a format that the PC 2 can read." (*Id.*, ¶¶0083-0085.) Moreover, PTM10 may use a modem circuit 34 and a carrier wave provided from circuit 33 and coil 19 for transmitting to PDA3 "data capacity information" received from PC2. (*Id.*, ¶0086.) Thus, a POSITA would have appreciated that the "communication and control circuit(s)" in PTM10 would have been capable of being configured to support digital communications. (Ex. 1002, ¶228.) This, coupled with the teachings of *Odendaal* and POSITA's state-of-art knowledge, would have motivated a POSITA to implement such features in the modified *Okada* system, especially in light of *Odendaal*'s teachings above. (*Id.*)

Indeed, it was well known to implement using "digital" information for verification processes in wireless charging systems using bi-directional communications. (Ex. 1040, ¶¶0020, 0028 ("operating parameters can be communicated between the power-transfer device and [a proximally placed]

electronic device"), 0030, 0062-0065 ("digital signature" data used to authenticate devices via wireless communication channel), 0086-0087, 0092.) Such teachings are consistent with a POSITA's knowledge of digital communications in inductive transfer systems. (Ex. 1002, ¶229; Ex. 1032, Abstract, 1:42-50, 5:18-61.)

Recognizing that digital communication was one of a finite number of options for bi-directional communication exchange of data (Ex. 1014, 532), a POSITA would have been motivated and found it beneficial to implement bi-directional "**digital**" communications in *Okada-Odendaal-Berghegger-Black*, like that claimed. (*Id.* ("digital-modulation systems offer better noise immunity than analog-modulation systems"); Ex. 1002, ¶230.) *KSR* at 416-18. Having the rationale/skills and guidance from, *e.g., Odendaal*, a POSITA would have had a reasonable expectation of success in configuring the *Okada-Odendaal-Berghegger-Black* system to provide bi-directional digital communications between the coils to verify a capable device is present and determine the power requirements of the device's receiver unit, consistent with that discussed above. (§IX.A.1; Ex. 1002, ¶230.)

4. Claim 12

a) The system of claim 1, wherein the system is incorporated into a portable device or battery pack comprising an internal rechargeable battery that can be periodically recharged and can operate the system for inductive charging or powering for a period of time.

The *Okada-Odendaal-Berghegger-Black* combination discloses/suggests this limitation. (Ex. 1002, ¶¶231-235; §IX.A.1.)

Okada additionally discloses a system, which instead of using AC power, uses an internal battery to power/charge PDA3. For example, *Okada* discloses configurations where PTM10 can be powered by an internal "rechargeable" battery that provides power to switching circuit 15. (Ex. 1005, ¶¶0148 ("these devices may be provided with an internal battery and may supply power from this battery"), 0149 (FIG. 17 configuration "is identical to that in FIG. 2, except that DC power is supplied from the battery 181"), 150-151, FIG. 17 (annotated below).) (Ex. 1002, ¶¶232.)

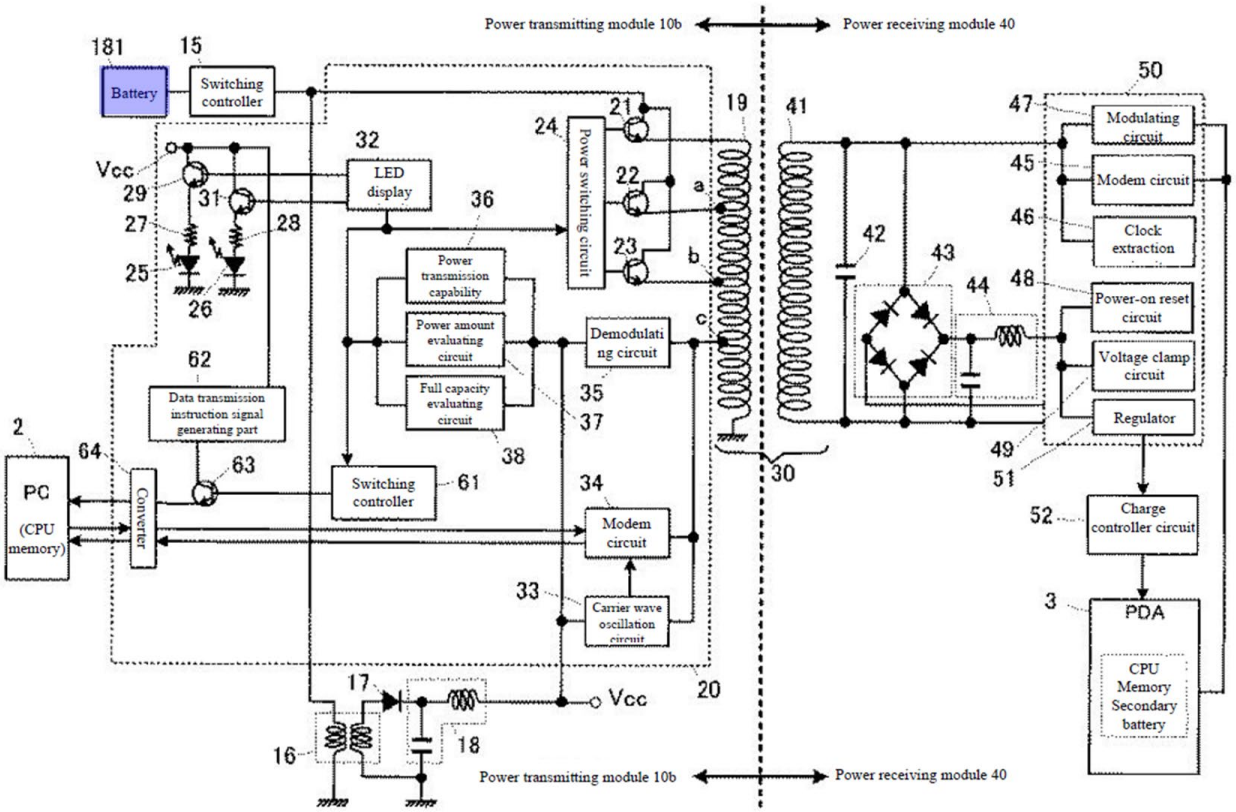

Okada discloses that "each of the examples described above, the common cradle 4 [Figure 1], power supply pad 100 [Figure 9], side panel 121 [Figure 11], side panel 131 [Figure 12], [and] mouse pad 141 [Figure 13]" may be provided with an internal battery and "may supply power from this battery." (*Id.*, ¶0148, FIGS. 1, 9, 11(a), 12-13 (below).)

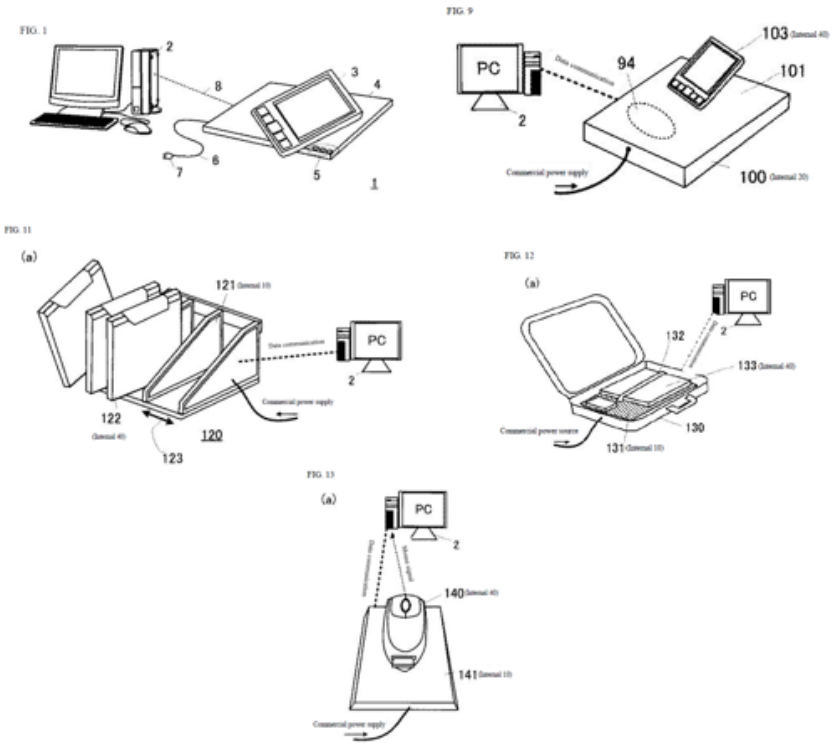

A POSITA would have understood by having a rechargeable battery, that it would have been repeatedly recharged to enable continued operations consistent with the power transfer features discussed by *Okada*. (Ex. 1002, ¶¶233-234.)

Thus, consistent with the teachings/suggestions of *Okada*, and for similar reasons discussed above for the modified *Okada* system (§IX.A.1(a)-(l)), a POSITA would have been motivated and found obvious to configure the primary-side components (e.g., PTM10, etc.) in the *Okada-Odendaal-Berghegger-Black* system in a portable device that is powered by an internal rechargeable battery that can be periodically recharged so that it can operate the system for inductive charging/powering for a period of time, like that described above. (*Id.*; Ex. 1002, ¶235.) A POSITA would have appreciated the benefits of such a portable design (as

suggested/taught by *Okada*) and ensured the internal battery was "periodically" charged to allow continued operation of the system. (*Id.*)

B. Ground 2: Claim 11 is obvious over *Okada* in view of *Odendaal*, *Berghegger*, *Black*, and *Shima*

1. Claim 11

a) The system of claim 1, wherein the one or more primary coils are constructed of a Printed Circuit Board comprising multiple layers connected by vias.

Okada-Odendaal-Berghegger-Black in view of *Shima* discloses/suggests this limitation. (Ex. 1002, ¶¶236-243; §IX.A.1.)

As explained, in view of *Odendaal*, it would have been obvious to configure the modified *Okada* system with planar primary coils. (§IX.A.1(b).) *Odendaal* discloses that such coils may be constructed of a multi-layer PCB. (Ex. 1008, 2:25-28 ("a set of spiral coils…with ***each spiral being a conductor trace on a separate substrate***, such as…***printed circuit board***"); 2:56-57, 3:46-48 ("desirable to have ***several layers of coils*** to increase the magnetic and electric capabilities of the resonator."), 7:1-10 ("the number of ***layers of the resonator***…can all be modified…," and "[t]he arrangement of the coils may ***occupy more than one plane***").) In light of such teachings and the reasons in §IX.A.1(b), a POSITA would have been motivated, and found obvious, to configure the *Okada-Odendaal-Berghegger-Black* system with multi-layer planar PCB primary coils, as claimed. (Ex. 1002, ¶238)

Although the *Odendaal-Okada* combination does not expressly state the multi-layer PCB-based coils were connected by vias, a POSITA would have found

it obvious to do so given that was a common design for interconnecting multi-layer PCB circuit arrangements, as exemplified by *Shima*. (Ex. 1002, ¶¶238-239.)

Shima, like *Okada-Odendaal-Berghegger-Black*, discloses an inductive power/signal transfer system using primary and secondary coils (Ex. 1032, Abstract, 1:42-50, 2:12-4:10, 5:62-6:53, 7:17-8:38), and thus is similarly in the same technical field as the '500 patent. (§IX.A.1; Ex. 1001, Abstract.) Likewise, *Shima* discloses features reasonably pertinent to particular problem(s) the '500 patent inventor and a POSITA was trying to solve. (*Id.*; Ex. 1001, Abstract, 10:17-22; Ex. 1002, ¶¶101-103, 240.) Therefore, a POSITA had reasons to consider/consult *Shima* when looking to design/implement the above-discussed *Okada-Odendaal-Berghegger-Black* system. (*Id.*)

Shima discloses connecting different coil patterns residing on different layers of PCBs by using through-holes ("vias"). For example, FIG. 3A (below) is described having "a plurality of thin printed-circuit substrates 30-1 to 30-n" with similar "coil patterns 32-1 to 32-n." (Ex. 1032, 5:62-6:1, FIGS. 3D-3E (below), 6:13-35.) Starting and terminating ends of the coil patterns are connected using through-holes 33 and 34, respectively. (*Id.*, 6:4-21.) Layers of loop patterns (*e.g.*, 37-1 to 37-n (FIG. 5A (below)) may also "have the respective through-holes [39] connected in such a way that a spiral coil is formed in the direction in which the printed-circuit substrates 30-1 to 30-n are stacked." (*Id.*, 7:17-35.) (Ex. 1002, ¶241.)

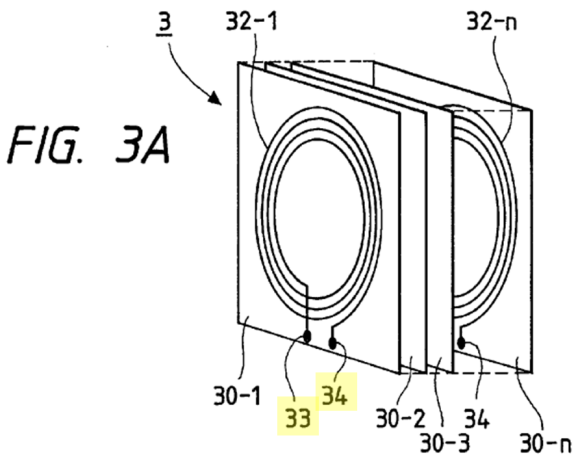

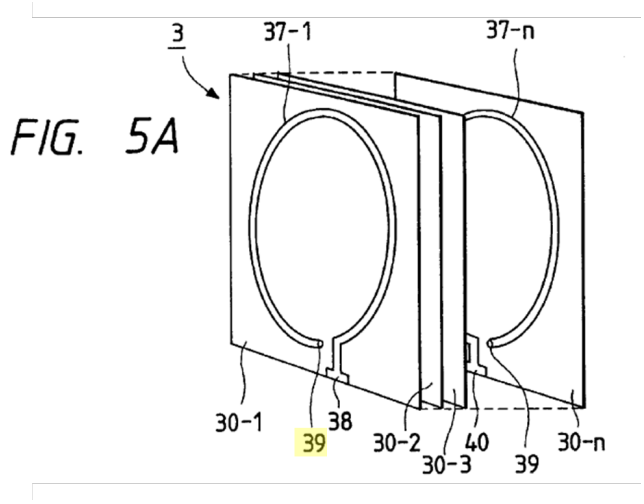

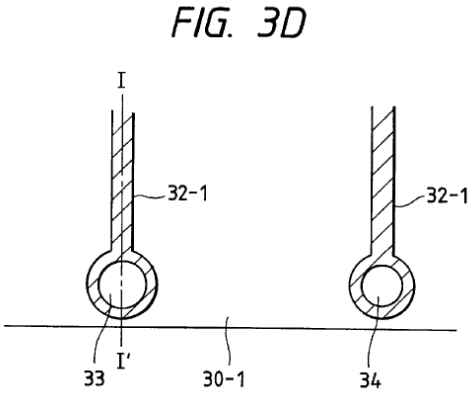

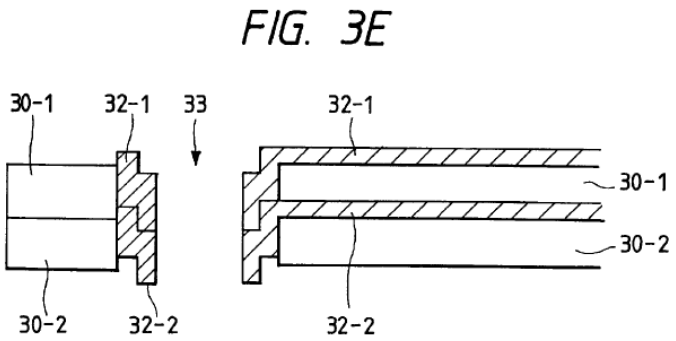

Based on the teachings of *Shima* and *Odendaal*, a POSITA would have been motivated and found obvious to configure/implement the primary coils in the *Okada-Odendaal-Berghegger-Black* system (§IX.A.1) as multi-layer/stacked PCB-planar coils interconnected by vias to allow the coils to maintain continuity while providing a compact coil configuration with enhanced efficiency and reduced conductor resistance as suggested by *Shima*. (Ex. 1002, ¶242; Ex. 1032, 6:47-53, 7:41-44, 8:28-33.) A POSITA would have appreciated the versatility in applications taught by *Okada* (§IX.A.1(a)) and known stacked PCB coil designs and ways to

interconnect them (vias) (*Shima/Odendaal*), and thus been motivated to design/implement various system designs that were consistent with such applications, including thin form factor configurations. (§IX.A.1(b); Ex. 1002, ¶242.)

A POSITA would have had the skill and rationale in implementing, and reasonable expectation of success in achieving, such a modification, especially since it was known to use vias to connect multi-layered PCBs. (Ex. 1002, ¶243; Ex. 1045, ¶0026, FIGS. 3A-C; Ex. 1032 (*supra*).) Thus, such modification would have involved applying known technologies/techniques to yield the predictable result of providing a charger with stacked-PCB primary coils that would have performed power/signal communications consistent with that discussed above for the *Okada-Odendaal-Berghegger-Black* system. (§IX.A.1.) *KSR* at 416-18.

C. Ground 3: Claims 12-13 are obvious over *Okada* in view of *Odendaal*, *Berghegger*, *Black*, and *Takagi*

1. Claim 12

Section IX.A.4 demonstrates how the *Okada-Odendaal-Berghegger-Black* system (in light of *Okada*) discloses/suggests incorporating the "system" into a portable device with an internal rechargeable battery that can be periodically recharged as recited in claim 12. Such features (of claim 12) would have been obvious to implement in light of *Takagi* for the additional reasons explained below for claim 13 in light of *Takagi*. (§IX.C.2.) (Ex. 1002, ¶¶244-245.)

2. Claim 13

a) The system of claim 12, further comprising one or more receiver unit circuits coupled to one or more of the one or more primary coils to enable the system and its internal battery to be charged or powered inductively.

Okada-Odendaal-Berghegger-Black in view of *Takagi* discloses/suggests the limitations of claims 12-13. (Ex. 1002, ¶¶244-252; §IX.A.1.)

As explained, *Okada* discloses configurations where PTM10 can be powered by an internal "rechargeable" battery. (§IX.A.4; Ex. 1005, ¶¶0148-0151, FIG. 17 (FIG. 17 configuration "is identical to that in FIG. 2, except that DC power is supplied from the battery 181"), ¶¶0150-0151, FIGS. 1, 9, 11(a), 12-13, 17.) And while a POSITA would have understood such a rechargeable battery would have been repeatedly recharged to enable continued operations of the *Okada-Odendaal-Berghegger-Black* system (§IX.A.4; Ex. 1002, ¶247), a POSITA would have been motivated, and found obvious, to configure such a portable system to include receiver unit circuit(s) to facilitate periodic recharging via primary coil(s) 19, like that recited in claims 12-13, in light of *Takagi*. (Ex. 1002, ¶247.)

Takagi, like *Okada-Odendaal-Berghegger-Black*, discloses inductive power/signal transfer system configurations using primary and secondary coils. (Ex. 1033, Abstract, FIGS. 1-7, ¶¶0003, 0013-0030, 0041-0078), and thus is similarly in the same technical field as the '500 patent. (§IX.A.1; Ex. 1001, Abstract.) Likewise,

Takagi discloses features reasonably pertinent to particular problem(s) the '500 patent inventor and a POSITA was trying to solve. (*Id.*; Ex. 1033, ¶¶0005-0015; Ex. 1001, Abstract, 2:15-4:30; Ex. 1002, ¶¶104-106, 248.) Therefore, a POSITA had reasons to consider/consult *Takagi* when looking to design/implement the above-discussed *Okada-Odendaal-Berghegger-Black* system. (*Id.*)

Takagi discloses a power transmitting/receiving device 12 including a coil 125, power transmitting circuit 121, power receiving circuit 122, secondary battery 123, and other components. (Ex. 1033, FIG. 2 (annotated below), ¶0047.) Such features are applicable to portable systems, *e.g.*, cellular phones, portable PCs. (*Id.*, ¶¶0026, 0030, 0043, 0058, 0065, 0070.)

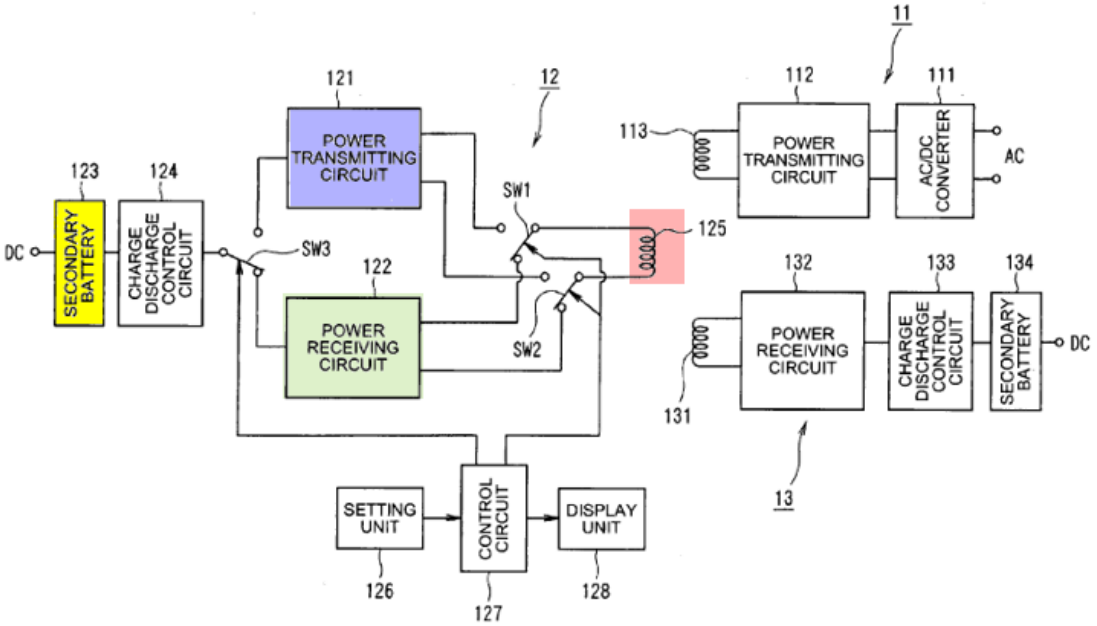

FIG. 2

Transmitting circuit 121 produces an alternating voltage from battery 123, and supplies it to coil 125 for inductively charging device 13 via coupled secondary coil 131. (*Id.*, ¶¶0048, 0054-0056.) Alternatively, device 12 may also inductively receive power from device 11 (via coils 125 and 113) for recharging battery 123. (*Id.*, ¶¶0048-0053.) Thus, when coil 113 approaches coil 125 (and based on switch SW1-SW2 settings), power receiving circuit 122 receives power from device 11 (via the magnetic coupling between coils 125 and 113) to charge battery 123. (*Id.*, ¶0048, 0052-0053, 0069-0072; *id.*, 0057-0068.) Battery 123 can be "repeatedly used by charging," and thus is periodically recharged. (*Id.*, ¶0049; Ex. 1002, ¶249.)

Based on the teachings/suggestions of *Takagi*, a POSITA would have been motivated, and found obvious, to configure the *Okada-Odendaal-Berghegger-Black* system such that the "system" is incorporated in a portable device (e.g., portable computer, etc.) with receiver unit circuitry that inductively receives power via coil(s) 19 to periodically recharge an internal battery that provides power for the portable device (as suggested/taught by *Takagi*), while maintaining functionality as a power transmission device for inductively charging/powering PDA3 (as discussed above (§IX.A.1) and suggested/taught by *Takagi*). (Ex. 1002, ¶250.)

A POSITA would have been motivated to implement such a modification given *Okada* discloses portable system configurations that use a "rechargeable" battery, and thus would have found the guidance offered by *Takagi* relevant to

modifying such configurations to beneficially improve the *Okada-Odendaal-Berghegger-Black* system in manners consistent with that taught by *Takagi*. (§IX.A.4; *supra*; Ex. 1002, ¶251.) Indeed, implementing receiver circuitry in the "system" would have allowed the rechargeable battery in the modified *Okada* system to maintain charge using inductive power components present in the system (*e.g.,* coil 19, switch circuitry, IC components, etc.) while expanding the system's functionalities as a portable power transmitting and receiving system, as taught/suggested by *Takagi*. (Ex. 1002, ¶251.) A POSITA would have appreciated the benefits of coupling such "receiver unit circuit(s)" to "primary coil(s)" 19 because it would have allowed the "drive circuit(s)" (§IX.A.1(c)) to share the coil with such receiver circuit(s), enabling the system "to be compact and occupy little space." (Ex. 1033, ¶0071; Ex. 1002, ¶251.)

A POSITA would have had the skill and rationale in implementing, and reasonable expectation of success in achieving, such modification consistent with claims 12-13, especially since it was known to provide inductive power transfer systems that can both power other devices and receive power for charging an internal battery. (*See supra* (*Takagi*); Ex. 1002, ¶252; Ex. 1043, 4:34-55, FIG. 3, 5:23-25.) Thus, such modification would have involved applying known technologies/techniques to yield the predictable result of providing a versatile and

portable charging system that would maintain operations through a rechargeable battery, consistent with that discussed above. (§IX.A.1.) *KSR* at 416-18.

D. Ground 4: Claim 20 is obvious over *Okada* in view of *Odendaal*, *Berghegger*, *Black*, and *Chen*

1. Claim 20

a) The system of claim 1, further comprising a metallic layer designed to remove heat from the one or more primary coils during power transfer.

Okada-Odendaal-Berghegger-Black in view of *Chen* discloses/suggests this limitation. (Ex. 1002, ¶¶253-259; §IX.A.1.)

While *Okada* (and *Odendaal-Berghegger-Black*) does not expressly disclose the system including "a metallic layer designed to remove heat from the one or more primary coils during power transfer," a POSITA would have found it obvious to implement such a feature in view of *Chen*. (Ex. 1002, ¶255.)

Chen, like *Okada-Odendaal-Berghegger-Black*, discloses powering/charging system features/configurations that utilize inductive windings/coils (Ex. 1035, FIG. 1, ¶¶0002, 0035, 0042) and thus is similarly in the same technical field as the '500 patent. (§IX.A.1; Ex. 1001, Abstract.) Likewise, *Chen* discloses features reasonably pertinent to particular problem(s) the '500 patent inventor and a POSITA was trying to solve. (*Id.*; Ex. 1035, Abstract, ¶¶0057-058; Ex. 1001, 64:22-24; Ex. 1002, ¶¶107-110, 256.) Therefore, a POSITA had reasons to consider/consult *Chen* when looking

to design/implement the *Okada-Odendaal-Berghegger-Black* system discussed above. (*Id.*)

Chen discloses designs/layers/materials associated with a multi-layer inductor substrate associated with a planar transformer arrangement in an inductive power transfer system. (Ex. 1035, Abstract.) Such configurations include use of thermally conductive materials to dissipate heat according to known heat sink configurations in circuit design. (Ex. 1002, ¶257; Ex. 1035, FIG. 4 (below).)

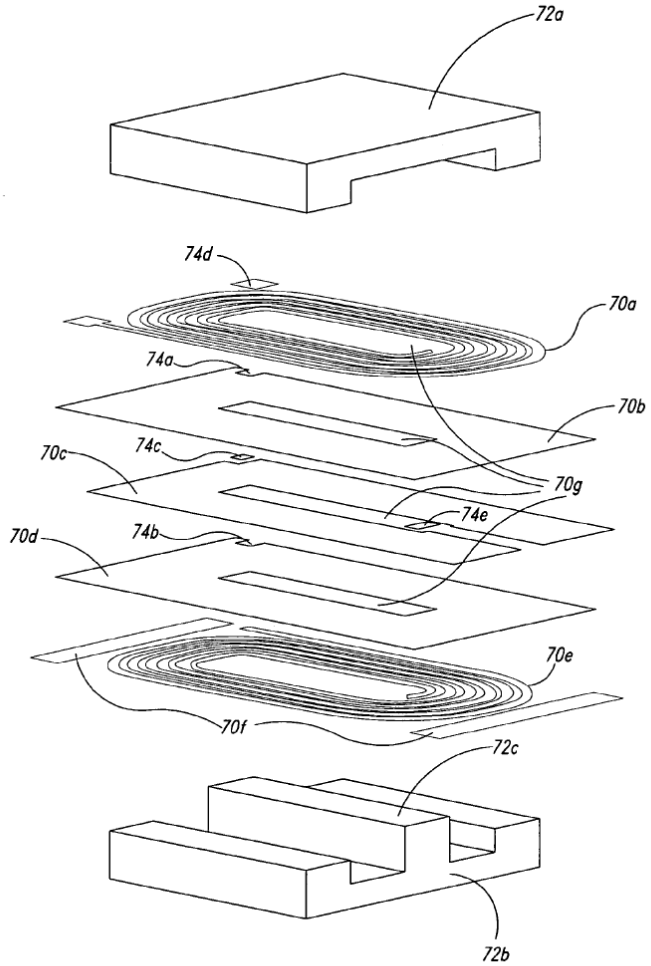

FIG. 4

Transformer T1 may be configured with multiple layers electrically interconnected through vias forming first and second windings. (Ex. 1035, FIG. 4, ¶¶0057-0059.) The first and second windings are "electrically and thermally conductive." (*Id.*, ¶0058.) *Chen* explains that "mounting areas 70f for attaching [Transformer T1] to the heat sink 56" (*id.*, ¶0060) is "electrically and thermally conductive" (*id.*, ¶¶0058, 0060), and may take a "variety of forms such as copper, aluminum and/or other…conductors" (*id.*, ¶0063; ¶0085 (heat sink 56 may include fins/pins "for transferring heat").) (Ex. 1002, ¶257.)

A POSITA would have been motivated and found obvious to implement known heat sink designs, such as a metallic and thermally conductive layer, as taught by *Chen*, to remove heat from primary coil 19 during power transfer in the modified *Okada* system. (Ex. 1002, ¶258.) Heat dissipation was a common design consideration in electronic circuits, especially given electronic components were known to generate excessive heat and inductive coupling has a tendency to heat surrounding components (Ex. 1042, 5:4-7), reducing electronic component reliability (Ex. 1035, ¶0006). (Ex. 1002, ¶258; Ex. 1054, ¶¶0021-0022 (aluminum/copper heat sink; Ex. 1055, ¶0035 (benefits of adding heat sink materials).) Thus, a POSITA would have found it beneficial to implement the above-modification to direct heat away from coil 19 and other components/circuits in the *Okada-Odendaal-Berghegger-Black* system. (*Id.*)

A POSITA would have had the skill and rationale in implementing, and reasonable expectation of success in achieving, such modification. (Ex. 1002, ¶259.) Indeed, such modification would have involved applying known technologies/techniques (*e.g.,* known use of metallic layer-based heat sink material to dissipate heat from primary coils during power transfer) to yield the predictable result of providing an inductive charging system that would maintain operations with reduced heat damage, consistent with that discussed above by *Chen* and known in the art. (*Id.*) *KSR* at 416-18.

X. DISCRETIONARY DENIAL IS NOT APPROPRIATE

Section 325(d) denial is not appropriate here given the prior art combinations/arguments during prosecution are not the same or substantially similar to the grounds presented herein. For instance, the Office did not consider *Okada* in light of the other asserted prior art herein. (*Generally* Ex. 1004; Ex. 1001, Cover.) *Okada* discloses/suggests many of the claimed features, and thus is relevant to the patentability of the challenged claim(s), especially when considered in context of the asserted obviousness positions. (§IX.) The examiner also did not have the benefit of expert testimony to support such teachings/suggestions as presented here. (Ex. 1002.) Thus, the examiner erred in allowing the claims without considering the teachings/suggestions in the prior art relied on in this Petition (as discussed in §IX). (Ex. 1004, 186-193.) Had the examiner done so, the challenged claims would have likely not have issued.[13]

Furthermore, an evaluation of the factors under *Apple Inc. v. Fintiv, Inc.*, IPR2020-00019, Paper 11 (Mar. 20, 2020) (precedential), favors institution.

[13] Petitioner reserves the right to seek leave to respond to any §325(d) (and §314) arguments PO may raise to avoid institution.

The **first factor** (stay) is neutral, because Samsung has not yet moved for a stay. *See Hulu LLC v. SITO Mobile R&D IP, LLC et al.*, IPR2021-00298, Paper 11 at 10-11 (P.T.A.B. May 19, 2021).

The **second factor** (proximity) is neutral. "The PTAB will weigh this factor against exercising discretion to deny institution under *Fintiv* if the median time-to-trial is around the same time or after the projected statutory deadline for the PTAB's final written decision" (FWD). (Ex. 1064, 9.) The median time from filing to trial in the Eastern District of Texas is 19 months, meaning trial will be *no earlier* than May 2024 (Ex. 1065, 35), is close to the court's scheduled jury selection for August 5, 2024 (Ex. 1066, 1.) With this petition filed in June 2023, a FWD may be expected by December 2024, not long after the trial date.

That the FWD may come after the trial date is not dispositive. The Board has granted institution in cases where the FWD issued months after the scheduled trial date. The Board has relied on various justifications, such as diligence in filing the petition, a stipulation not to pursue the asserted grounds in litigation, minimal investment in litigation, and the merits of the invalidity challenge were strong. *Verizon Business Network Services, Inc. v. Huawei Techs. Co.*, IPR2020-01141, Paper 12 (Jan. 14, 2021). The same factors are present in this case. For instance, Petitioner diligently filed this petition (challenging long, convoluted claims) in advance of the one-year bar date and within four months of PO's infringement

contentions in the Texas Litigation. (Exs. 1018, 1022.) Fact discovery is not anticipated to close until March 18, 2024. (Ex. 1066, 3.) Expert discovery has not yet started. (*Id.*) And the *Markman* hearing has been scheduled for February 6, 2024, after the filing of this petition. (*Id.*)

The **third factor** (investment) also weighs against denial. The district court case is in the early stages. Fact discovery is in its infancy and the parties have not engaged in expert discovery. (Ex. 1066, 3.) The parties have not yet identified terms for construction. (*Id.*, 4-6.) Nor have there been any substantive orders in this case.

The **fourth factor** (overlap) also weighs against denial. Petitioner hereby stipulates that, if the IPR is instituted, Petitioner will not pursue the IPR grounds in the district court litigation. Thus, "[i]nstituting trial here serves overall system efficiency and integrity goals by not duplicating efforts and by resolving materially different patentability issues." *Apple, Inc. v. SEVEN Networks, LLC*, IPR2020-00156, Paper 10 at 19 (P.T.A.B. June 15, 2020); *see also Sand Revolution II, LLC v. Continental Intermodal Group-Trucking LLC*, IPR2019-01393, Paper 24 at 12 (P.T.A.B. June 16, 2020).

While the **fifth factor** (parties) may weigh slightly in favor of denial, because the Petitioner and PO are the same parties as in district court, based on a "holistic view," the factors favor institution. *Samsung Elecs. Co. Ltd. v. Dynamics Inc.*, IPR2020-00505, Paper 11 at 15 (P.T.A.B. Aug. 12, 2020).

Further, the Board should not discretionarily deny institution because this petition presents compelling merits. *See Commscope Tech. LLC v. Dali Wireless, Inc.*, IPR2022-01242, Paper 23 at 4-5 (P.T.A.B. Feb. 27, 2023) (precedential). As demonstrated above, the claimed features are a compilation of technologies/techniques known to be used in inductive power/charge systems. (§IX) Moreover, this Petition is the ***sole*** challenge to the challenged claims before the Board—a "crucial fact" favoring institution. *Google LLC v. Uniloc 2017 LLC*, IPR2020-00115, Paper 10 at 6 (May 12, 2020).

XI. CONCLUSION

Accordingly, Petitioner requests institution of IPR.

Respectfully submitted,

Dated: June 28, 2023

By: /Joseph E. Palys/
Joseph E. Palys (Reg. No. 46,508)
Counsel for Petitioner

CERTIFICATE OF COMPLIANCE

Pursuant to 37 C.F.R. § 42.24(d), the undersigned certifies that the foregoing Petition for *Inter Partes* Review of U.S. Patent No. 11,201,500 contains, as measured by the word-processing system used to prepare this paper, 13,995 words. This word count does not include the items excluded by 37 C.F.R. § 42.24 as not counting towards the word limit.

Respectfully submitted,

Dated: June 28, 2023

By: /Joseph E. Palys/
Joseph E. Palys (Reg. No. 46,508)
Counsel for Petitioner

CERTIFICATE OF SERVICE

I hereby certify that on June 28, 2023, I caused a true and correct copy of the foregoing Petition for *Inter Partes* Review of U.S. Patent No. 11,201,500 and supporting exhibits to be served via express mail on the Patent Owner at the following correspondence address of record as listed on PAIR:

115007 – NK Patent Law
4101 Lake Boone Trail
Suite 218
Raleigh, NC 27607

By: /Joseph E. Palys/
Joseph E. Palys (Reg. No. 46,508)