US 20030195581A1

(19) United States

(12) Patent Application Publication (10) Pub. No.: US 2003/0195581 A1

Meadows et al. (43) Pub. Date: Oct. 16, 2003

(54) IMPLANTABLE DEVICES USING RECHARGEABLE ZERO-VOLT TECHNOLOGY LITHIUM-ION BATTERIES

(76) Inventors: **Paul M. Meadows**, Glendale, CA (US); **Carla M. Mann**, Los Angeles, CA (US); **Hisashi Tsukamoto**, Saugus, CA (US); **Joey Chen**, Arcadia, CA (US)

Correspondence Address:
ADVANCED BIONICS CORPORATION
12740 SAN FERNANDO ROAD
SYLMAR, CA 91342 (US)

(21) Appl. No.: **10/419,000**

(22) Filed: **Apr. 18, 2003**

Related U.S. Application Data

(62) Division of application No. 09/627,803, filed on Jul. 28, 2000, now Pat. No. 6,553,263.

(60) Provisional application No. 60/146,571, filed on Jul. 30, 1999.

Publication Classification

(51) **Int. Cl.**[7] **A61N 1/36**

(52) **U.S. Cl.** **607/29**

(57) **ABSTRACT**

An implantable medical device, such as an implantable pulse generator (IPG) used with a spinal cord stimulation (SCS) system, includes a rechargeable lithium-ion battery having an anode electrode with a substrate made substantially from titanium. Such battery construction allows the rechargeable battery to be discharged down to zero volts without damage to the battery. The implantable medical device includes battery charging and protection circuitry that controls the charging of the battery so as to assure its reliable and safe operation. A multi-rate charge algorithm is employed that minimizes charging time while ensuring the battery cell is safely charged. Fast charging occurs at safer lower battery voltages (e.g., battery voltage above about 2.5 V), and slower charging occurs when the battery nears full charge higher battery voltages (e.g., above about 4.0 V). When potentially less-than-safe very low voltages are encountered (e.g., less than 2.5 V), then very slow (trickle) charging occurs to bring the battery voltage back up to the safer voltage levels where more rapid charging can safely occur. The battery charging and protection circuitry also continuously monitors the battery voltage and current. If the battery operates outside of a predetermined range of voltage or current, the battery protection circuitry disconnects the battery from the particular fault, i.e. charging circuitry or load circuits.

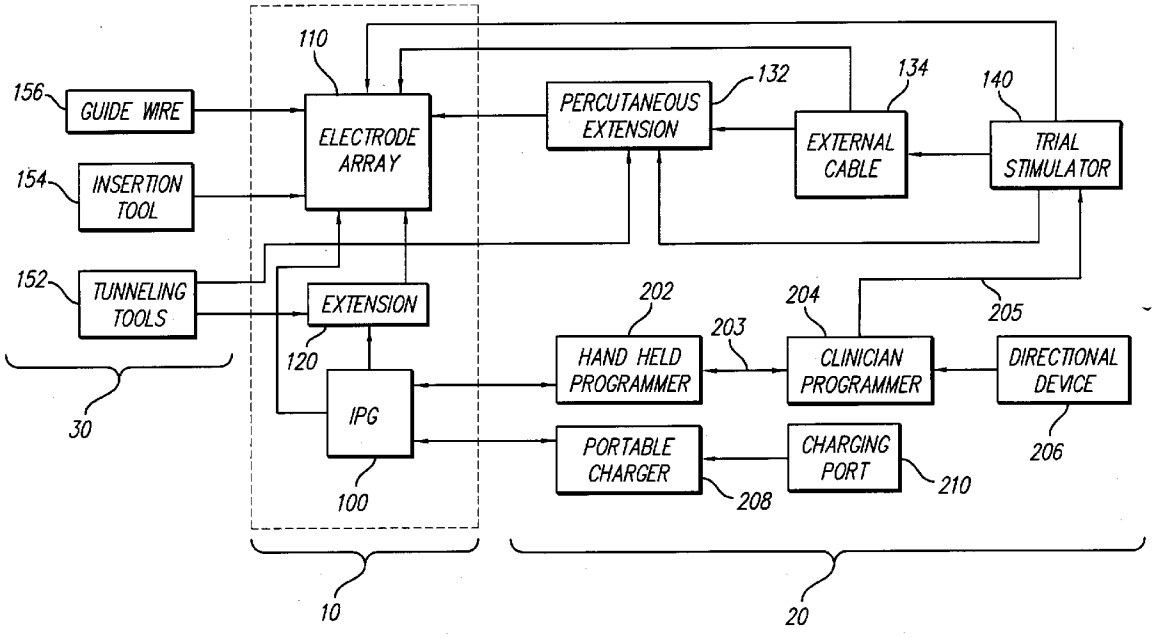

SAMSUNG EXHIBIT 1052

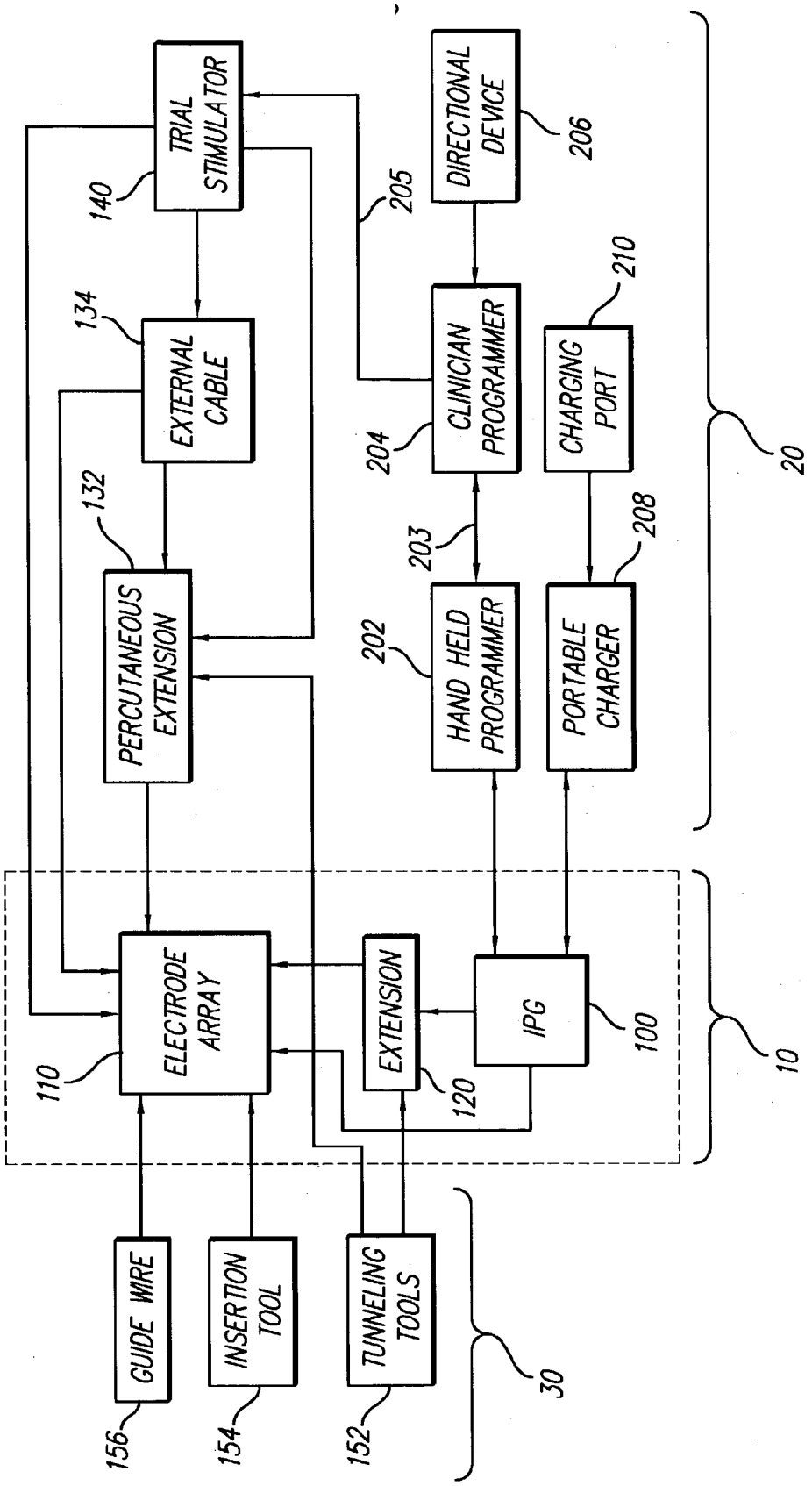
TRIAL STIMULATOR
140
EXTERNAL CABLE
134
PERCUTANEOUS EXTENSION
132
ELECTRODE ARRAY
110
GUIDE WIRE
156
INSERTION TOOL
154
TUNNELING TOOLS
152
30
EXTENSION
120
IPG
100
10
HAND HELD PROGRAMMER
202
203
CLINICIAN PROGRAMMER
204
205
DIRECTIONAL DEVICE
206
PORTABLE CHARGER
208
CHARGING PORT
210
20

FIG. 1

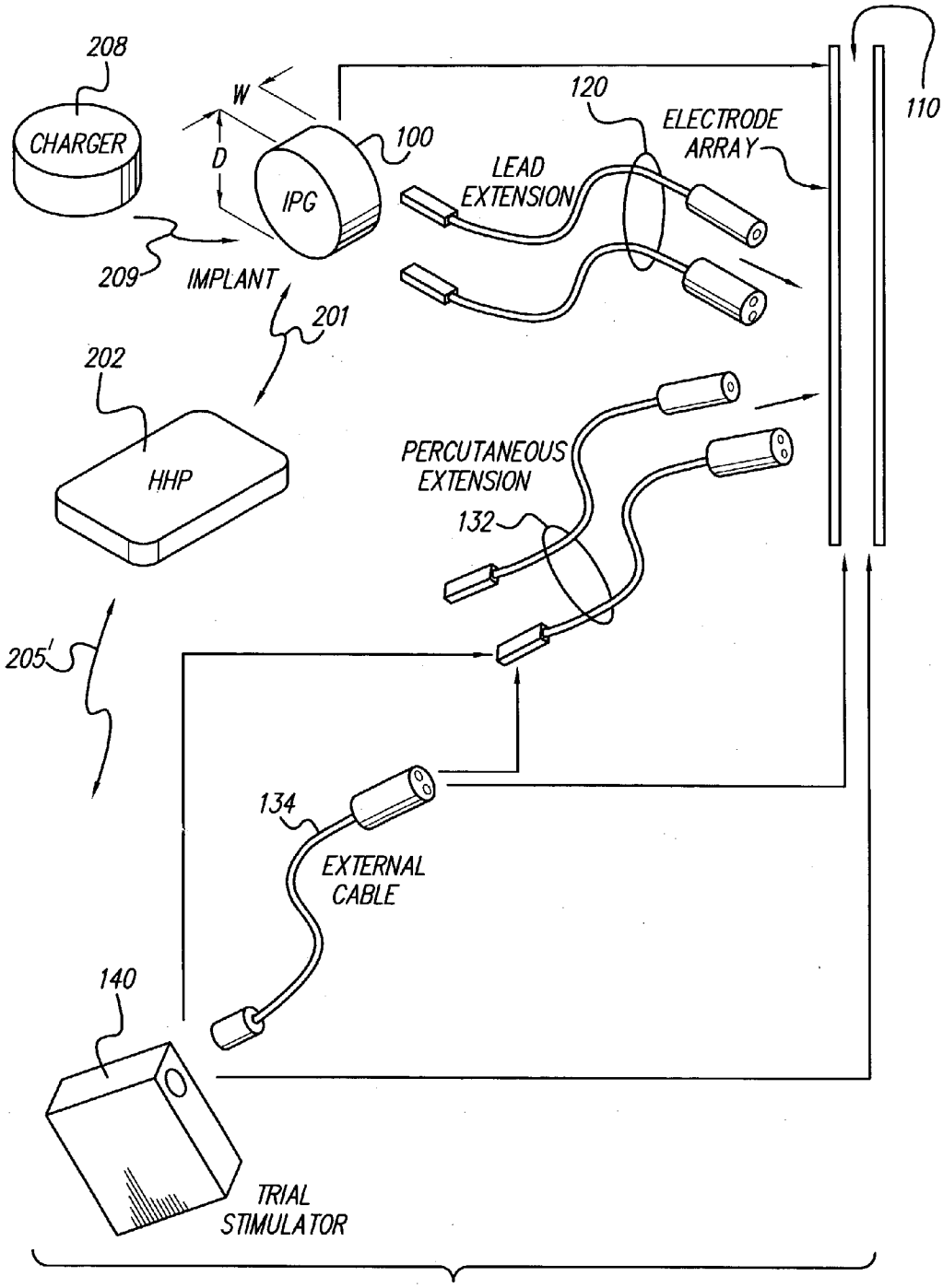
208
CHARGER
W
D
IPG
100
120
ELECTRODE ARRAY
110
LEAD EXTENSION
209
IMPLANT
201
202
HHP
PERCUTANEOUS EXTENSION
132
205'
134
EXTERNAL CABLE
140
TRIAL STIMULATOR

FIG. 2

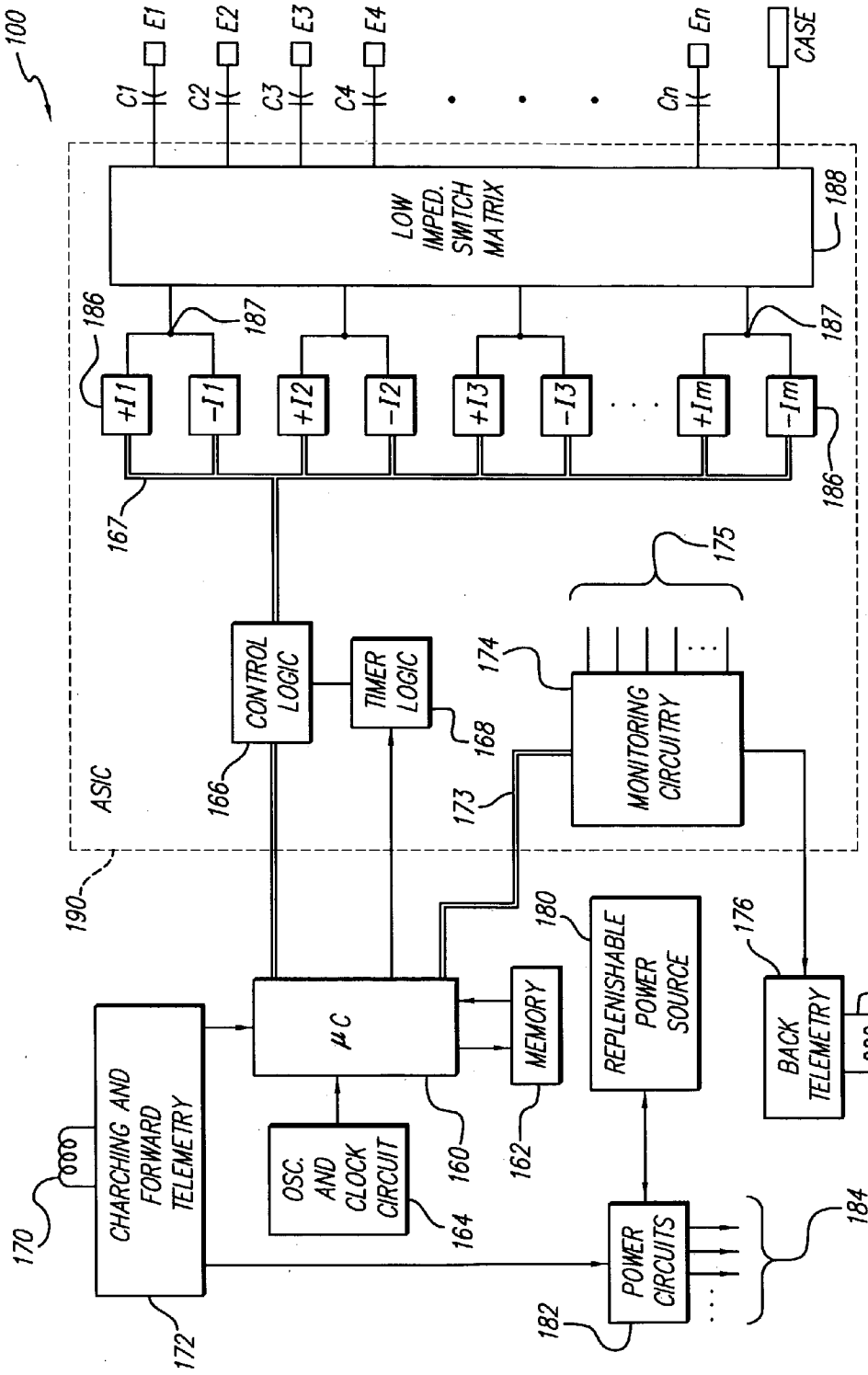
100
E1
E2
E3
E4
En
CASE
C1
C2
C3
C4
Cn
LOW IMPED. SWITCH MATRIX
188
186
187
+I1
-I1
+I2
-I2
+I3
-I3
+Im
-Im
167
175
CONTROL LOGIC
TIMER LOGIC
174
MONITORING CIRCUITRY
ASIC
166
168
173
190
180
REPLENISHABLE POWER SOURCE
176
177
μC
MEMORY
BACK TELEMETRY
CHARCHING AND FORWARD TELEMETRY
OSC. AND CLOCK CIRCUIT
160
162
164
170
POWER CIRCUITS
184
182
172

FIG. 3

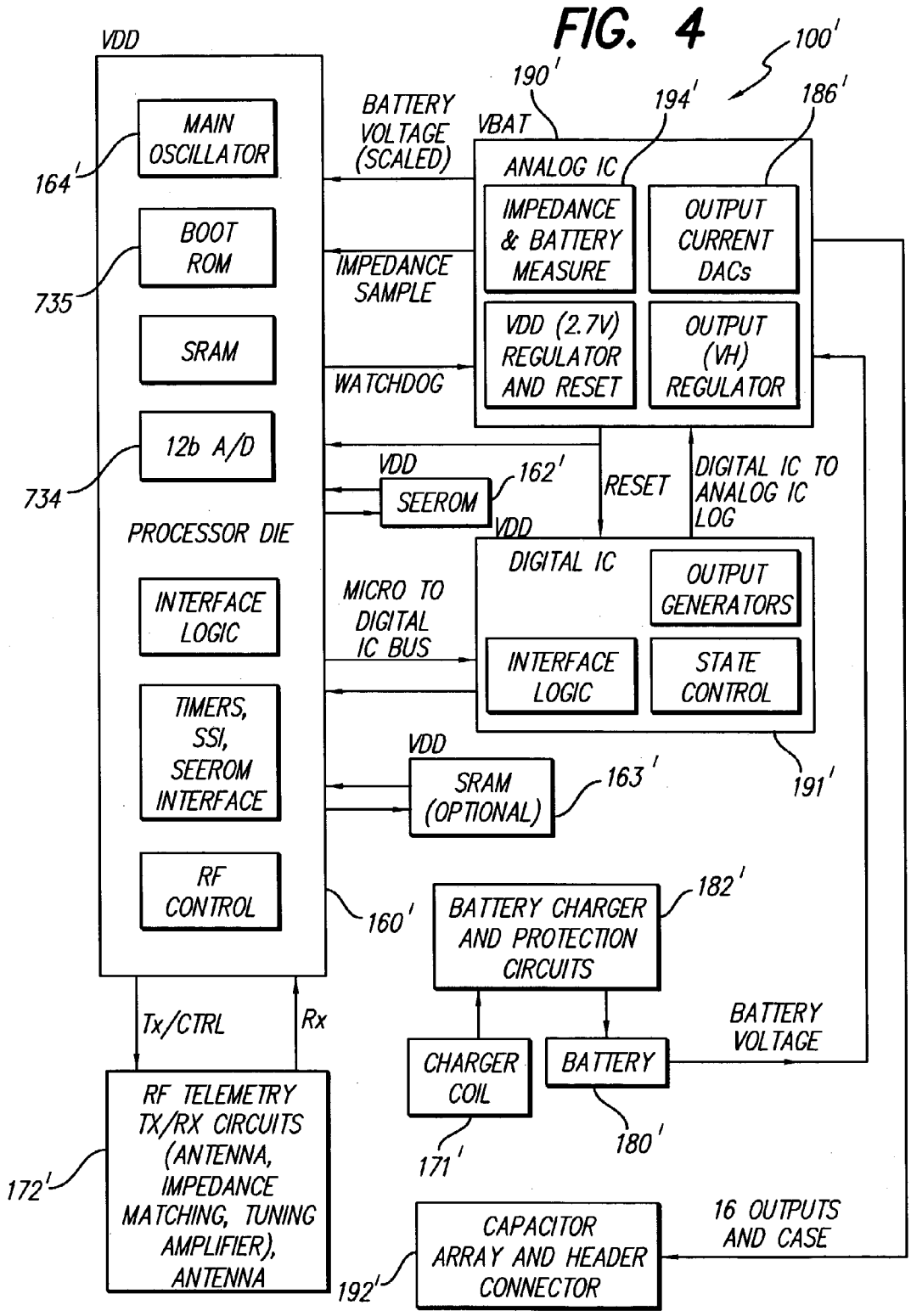
FIG. 4
100'
VDD
MAIN OSCILLATOR
164'
BOOT ROM
735
SRAM
12b A/D
734
PROCESSOR DIE
INTERFACE LOGIC
TIMERS, SSI, SEEROM INTERFACE
RF CONTROL
160'
BATTERY VOLTAGE (SCALED)
IMPEDANCE SAMPLE
WATCHDOG
190'
VBAT
194'
186'
ANALOG IC
IMPEDANCE & BATTERY MEASURE
OUTPUT CURRENT DACs
VDD (2.7V) REGULATOR AND RESET
OUTPUT (VH) REGULATOR
VDD
SEEROM
162'
RESET
DIGITAL IC TO ANALOG IC LOG
VDD
DIGITAL IC
OUTPUT GENERATORS
MICRO TO DIGITAL IC BUS
INTERFACE LOGIC
STATE CONTROL
191'
VDD
SRAM (OPTIONAL)
163'
182'
BATTERY CHARGER AND PROTECTION CIRCUITS
Tx/CTRL
Rx
BATTERY VOLTAGE
CHARGER COIL
BATTERY
171'
180'
RF TELEMETRY TX/RX CIRCUITS (ANTENNA, IMPEDANCE MATCHING, TUNING AMPLIFIER), ANTENNA
172'
CAPACITOR ARRAY AND HEADER CONNECTOR
192'
16 OUTPUTS AND CASE

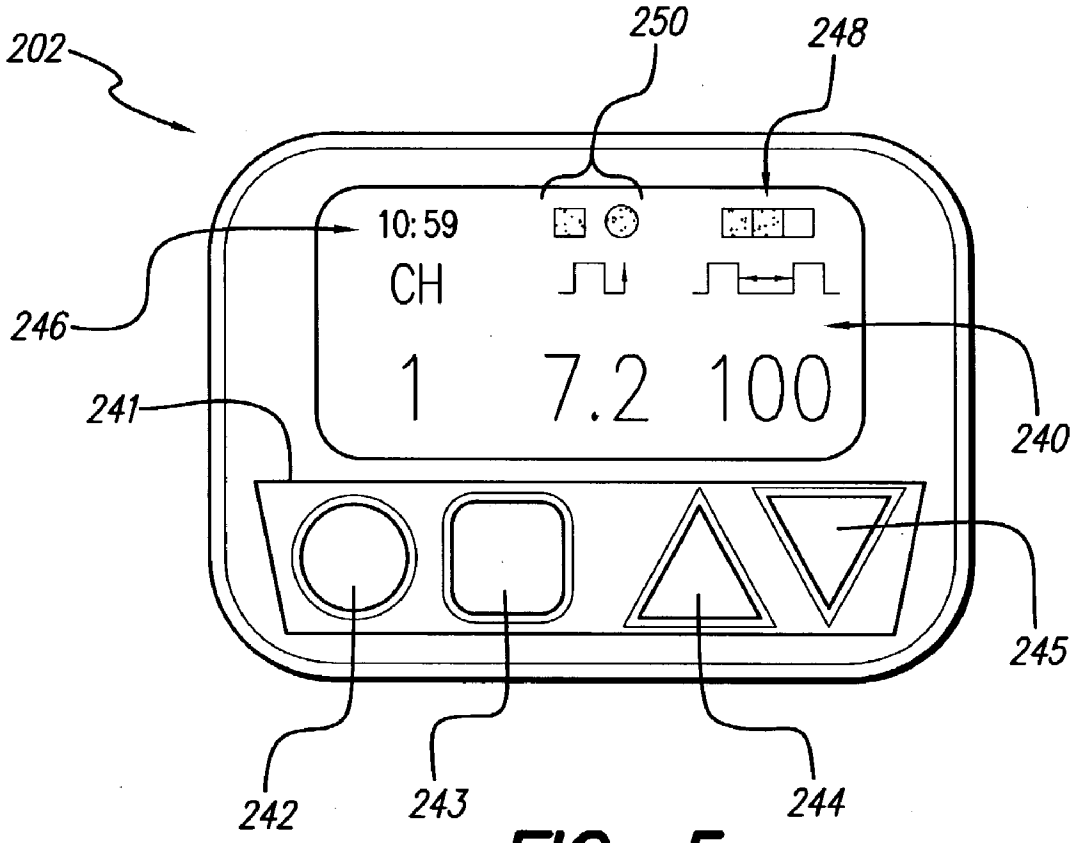

FIG. 5

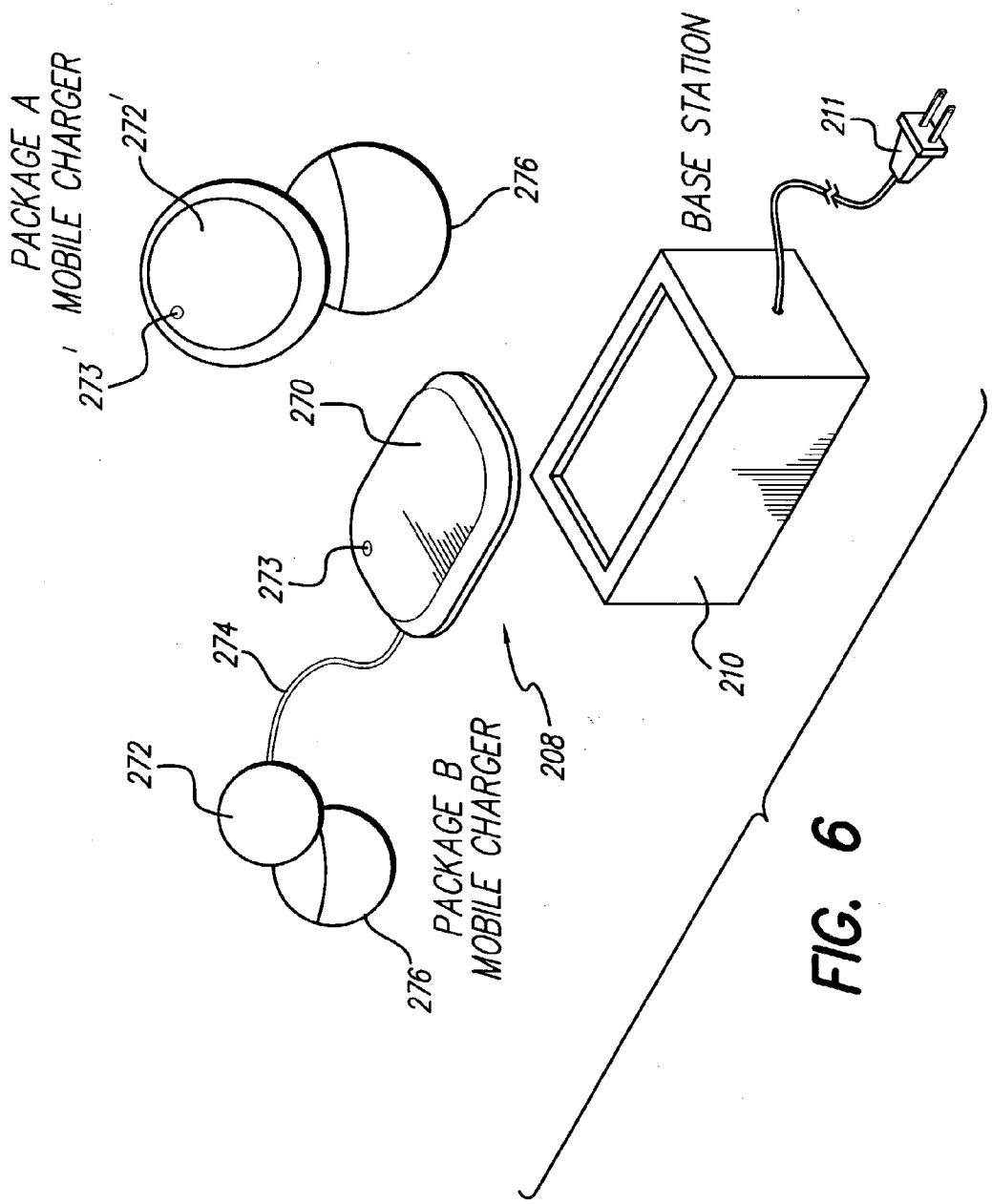
PACKAGE A
MOBILE CHARGER
272'
273'
276
270
273
274
272
276
PACKAGE B
MOBILE CHARGER
208
BASE STATION
210
211

FIG. 6

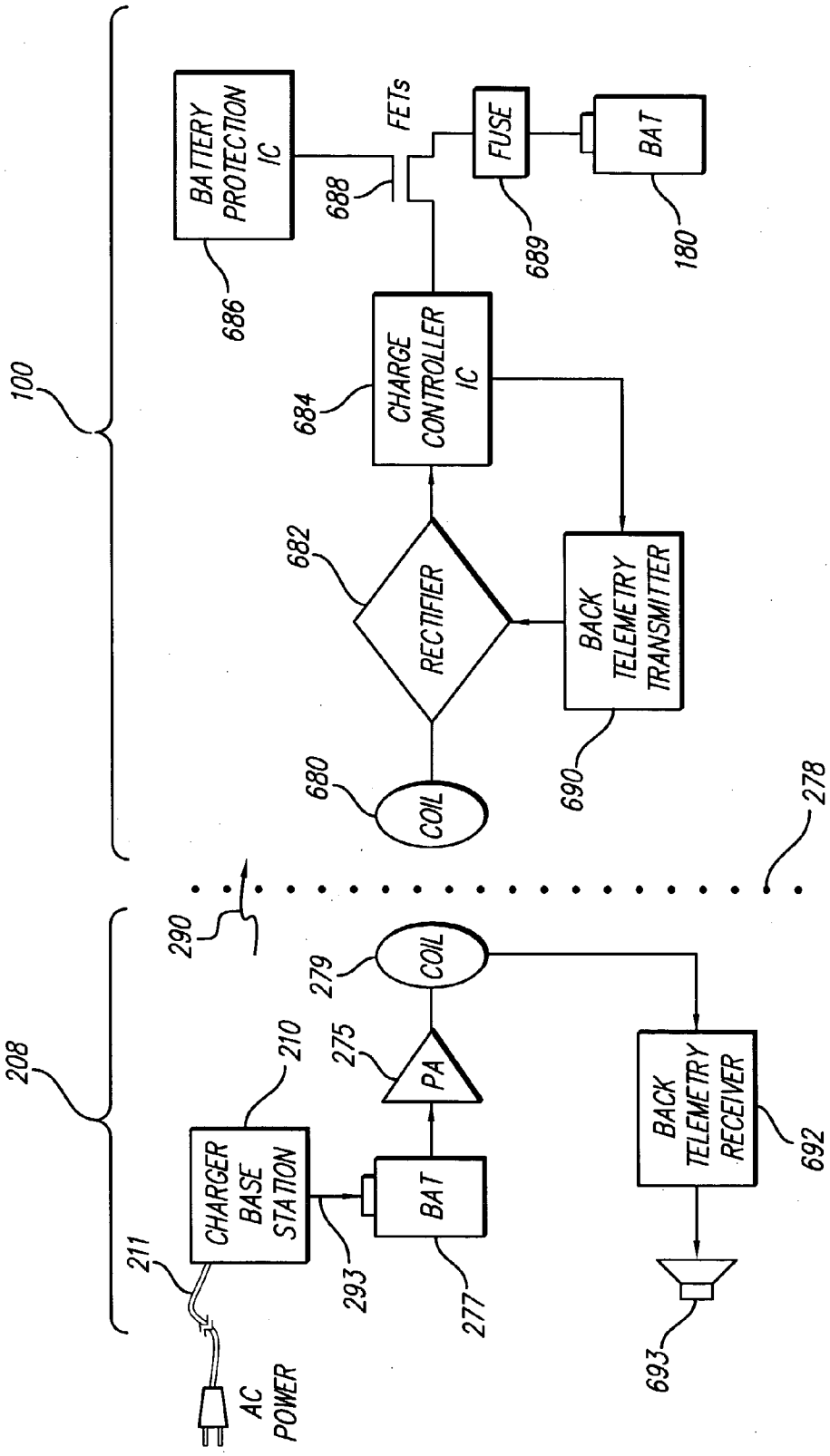
100
BATTERY PROTECTION IC
686
688
FETs
FUSE
689
BAT
180
CHARGE CONTROLLER IC
684
682
RECTIFIER
BACK TELEMETRY TRANSMITTER
680
COIL
690
278
290
208
CHARGER BASE STATION
210
211
AC POWER
293
BAT
277
275
PA
279
COIL
BACK TELEMETRY RECEIVER
692
693

FIG. 7A

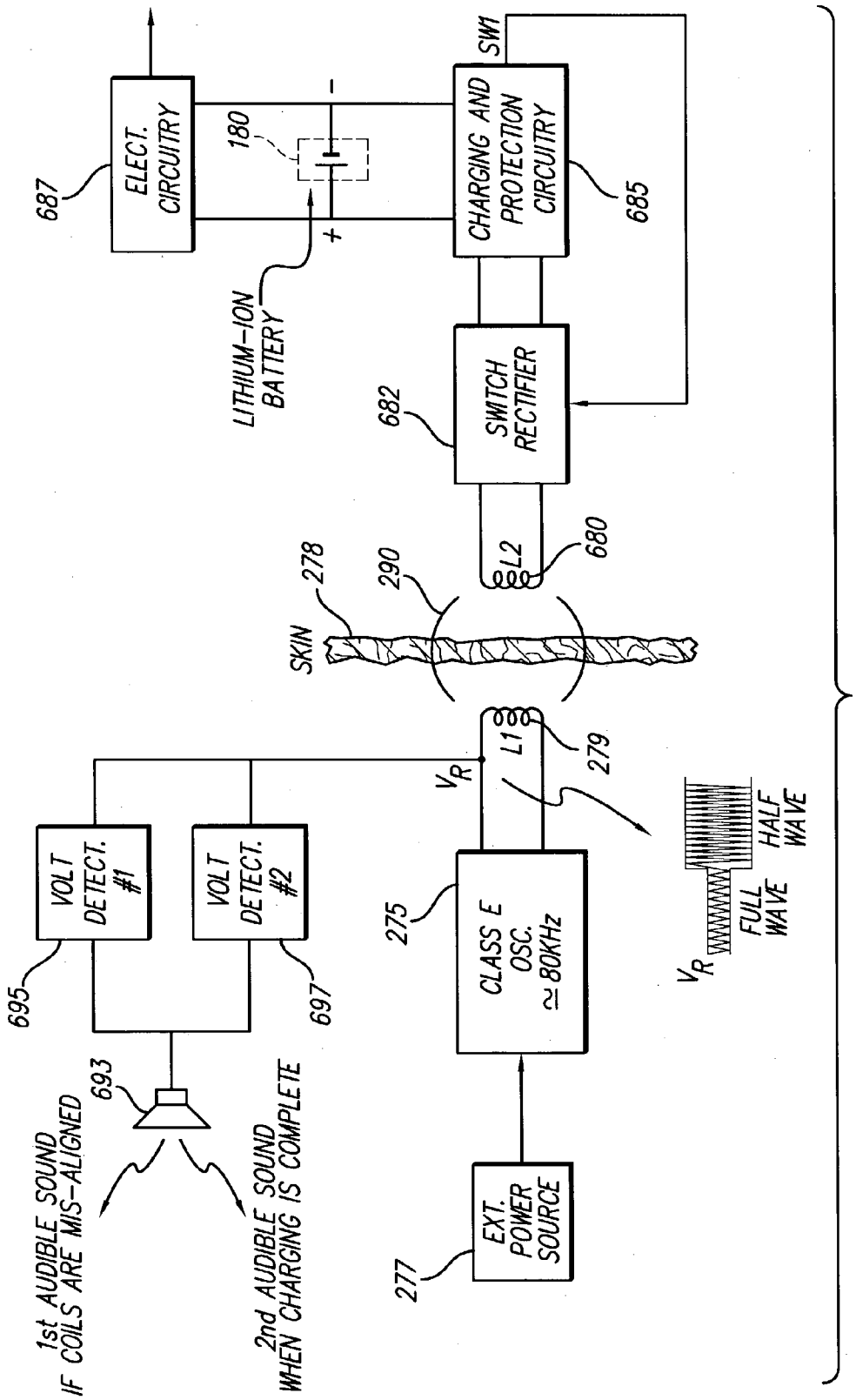
687
ELECT. CIRCUITRY
180
LITHIUM-ION BATTERY
CHARGING AND PROTECTION CIRCUITRY
SW1
685
682
SWITCH RECTIFIER
L2
680
278
290
SKIN
L1
279
V_R
VOLT DETECT. #1
VOLT DETECT. #2
695
697
275
CLASS E OSC. ≃ 80KHz
FULL WAVE
HALF WAVE
693
1st AUDIBLE SOUND IF COILS ARE MIS-ALIGNED
2nd AUDIBLE SOUND WHEN CHARGING IS COMPLETE
277
EXT. POWER SOURCE

FIG. 7B

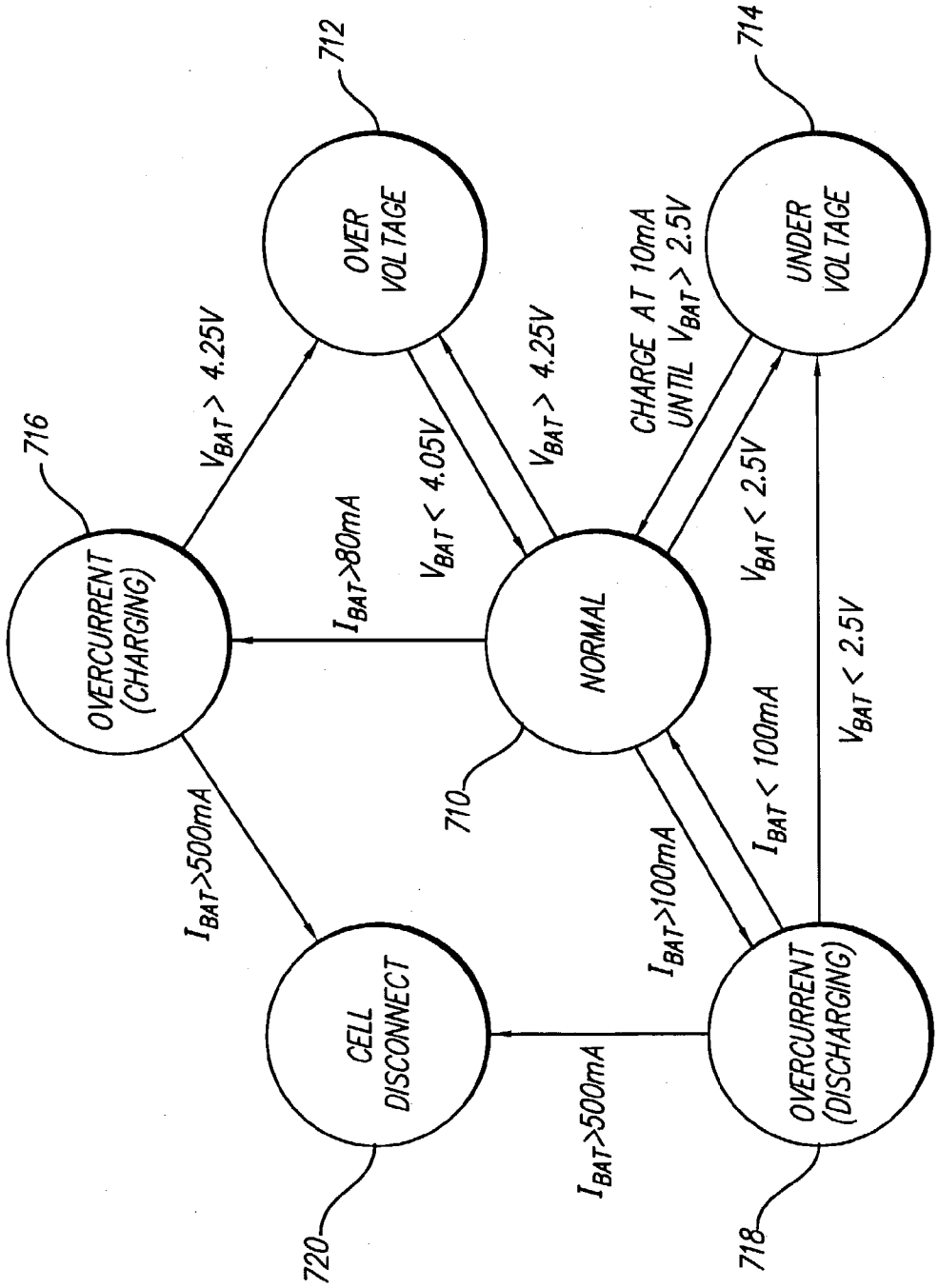
716
OVERCURRENT (CHARGING)
712
OVER VOLTAGE
714
UNDER VOLTAGE
710
NORMAL
720
CELL DISCONNECT
718
OVERCURRENT (DISCHARGING)
$V_{BAT} > 4.25V$
$I_{BAT} > 80mA$
$V_{BAT} < 4.05V$
$V_{BAT} > 4.25V$
CHARGE AT 10mA UNTIL $V_{BAT} > 2.5V$
$V_{BAT} < 2.5V$
$I_{BAT} > 500mA$
$I_{BAT} > 100mA$
$I_{BAT} < 100mA$
$V_{BAT} < 2.5V$
$I_{BAT} > 500mA$

FIG. 8

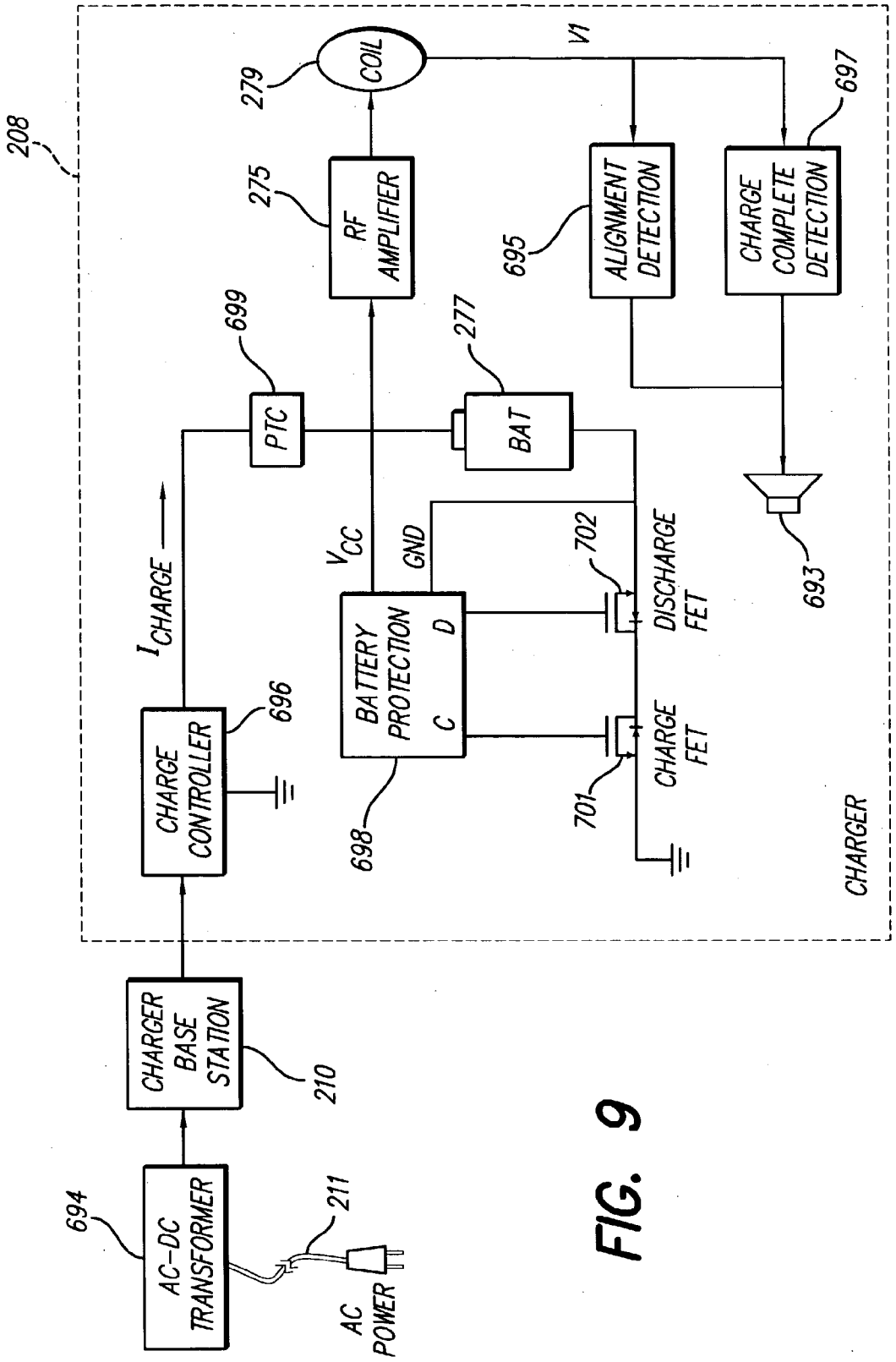
208
279
COIL
V1
697
275
RF AMPLIFIER
695
ALIGNMENT DETECTION
CHARGE COMPLETE DETECTION
699
277
PTC
BAT
I_{CHARGE}
V_{CC}
GND
702
DISCHARGE FET
693
BATTERY PROTECTION
D
C
696
CHARGE CONTROLLER
698
701
CHARGE FET
CHARGER
CHARGER BASE STATION
210
694
AC-DC TRANSFORMER
211
AC POWER

FIG. 9

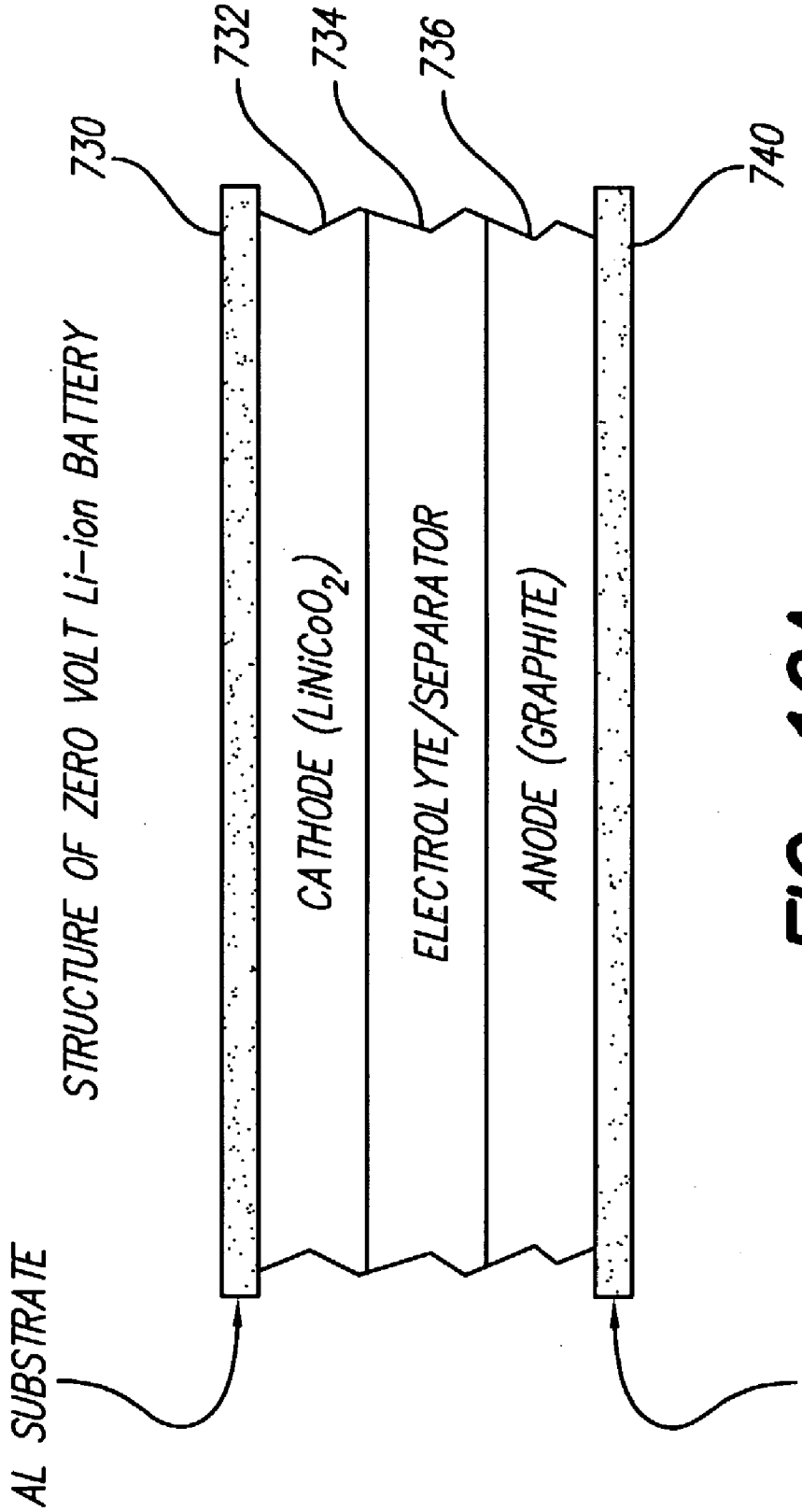
STRUCTURE OF ZERO VOLT Li-ion BATTERY
730
732
734
736
740
CATHODE ($LiNiCoO_2$)
ELECTROLYTE/SEPARATOR
ANODE (GRAPHITE)
AL SUBSTRATE
Ti SUBSTRATE

FIG. 10A

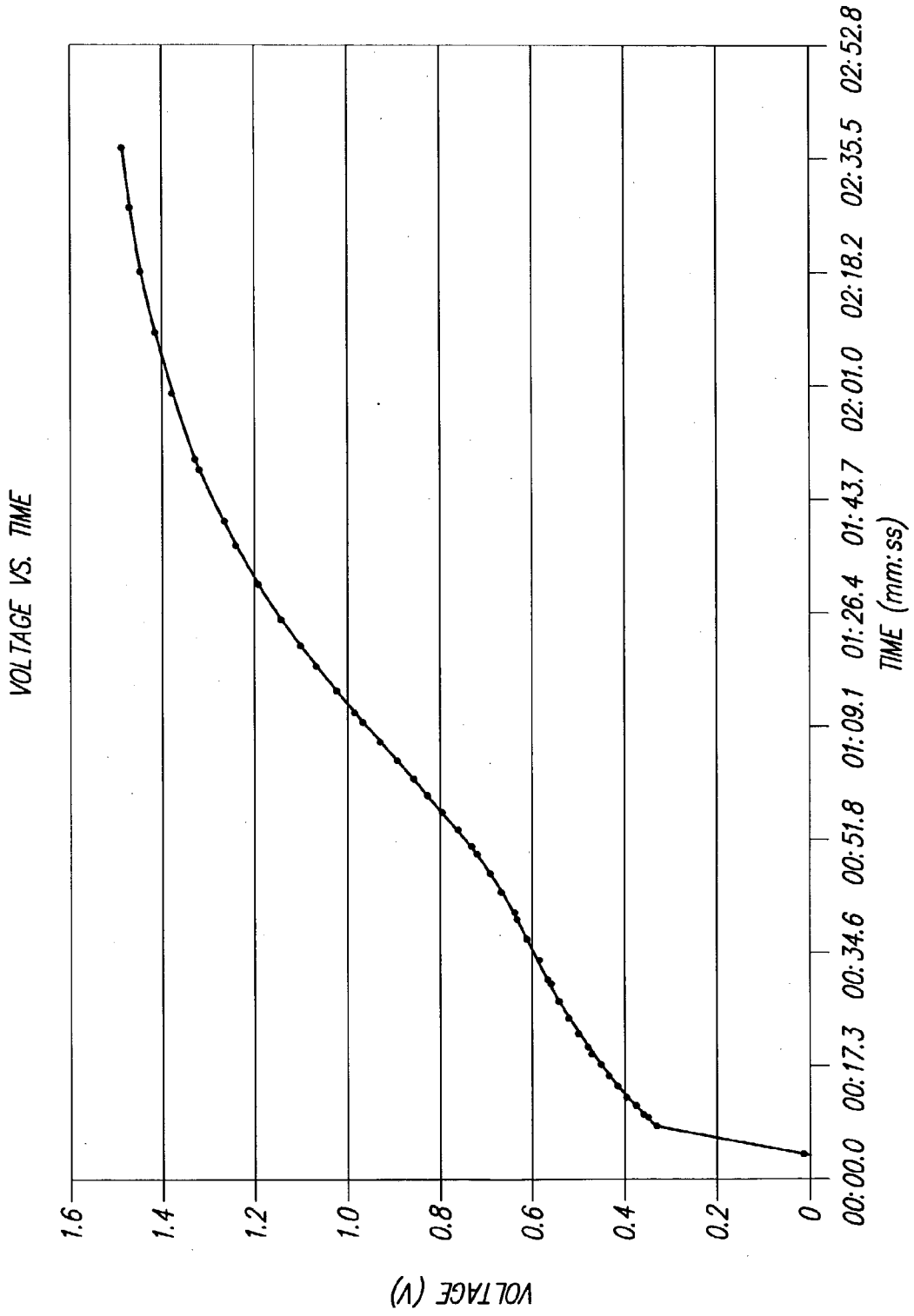
VOLTAGE VS. TIME
VOLTAGE (V)
1.6
1.4
1.2
1.0
0.8
0.6
0.4
0.2
0
00:00.0
00:17.3
00:34.6
00:51.8
01:09.1
01:26.4
01:43.7
02:01.0
02:18.2
02:35.5
02:52.8
TIME (mm:ss)

FIG. 10B

IMPLANTABLE DEVICES USING RECHARGEABLE ZERO-VOLT TECHNOLOGY LITHIUM-ION BATTERIES

[0001] This application is a divisional of U.S. application Ser. No. 09/627,803, filed Jul. 28, 2000, which application claims the benefit of U.S. Provisional Application Serial No. 60/146,571, filed Jul. 30, 1999, which provisional application is incorporated herein by reference.

BACKGROUND OF THE INVENTION

[0002] The present invention relates generally to implantable pulse generators, e.g., a pulse generator used within a Spinal Cord Stimulation (SCS) system or other type of neural stimulation system. More particularly, the present invention relates to the use of a rechargeable zero-volt technology lithium-ion battery within such an implantable pulse generator.

[0003] Implantable pulse generators (IPG) are devices that generate electrical stimuli to body nerves and tissues for the therapy of various biological disorders, such as pacemakers to treat cardiac arrhythmia, defibrillators to treat cardiac fibrillation, cochlear stimulators to treat deafness, retinal stimulators to treat blindness, muscle stimulators to produce coordinated limb movement, spinal cord stimulators to treat chronic pain, cortical and deep brain stimulators to treat motor and psychological disorders, and other neural stimulators to treat urinary incontinence, sleep apnea, shoulder sublaxation, etc. The present invention may find applicability in all such applications, although the description that follows will generally focus on the use of the invention within a spinal cord stimulation system. A spinal cord stimulation system is a programmable implantable pulse generating system used to treat chronic pain by providing electrical stimulation pulses from an electrode array placed epidurally near a patient's spine. SCS systems consist of several components, including implantable and external components, surgical tools, and software. The present invention provides an overview an SCS system and emphasizes the use of a rechargeable zero volt technology battery within such a system, including the charging system used for charging the rechargeable battery.

[0004] Spinal cord stimulation is a well-accepted clinical method for reducing pain in certain populations of patients. SCS systems typically include an implantable pulse generator, lead wires, and electrodes connected to the lead wires. The pulse generator delivers electrical pulses to the dorsal column fibers within the spinal cord through the electrodes implanted along the dura of the spinal cord. The attached lead wires exit the spinal cord and are tunneled around the torso of the patient to a subcutaneous pocket where the pulse generator is implanted.

[0005] Spinal cord and other stimulation systems are known in the art, however, to applicants' knowledge, none teach the use of a rechargeable zero-volt technology battery within the implanted portion of the system, with accompanying charging and protection circuitry, as proposed herein. For example, in U.S. Pat. No. 3,646,940, there is disclosed an implantable electronic stimulator that provides timed sequenced electrical impulses to a plurality of electrodes so that only one electrode has a voltage applied to it at any given time. Thus, the electrical stimuli provided by the apparatus taught in the '940 patent comprise sequential, or non-overlapping, stimuli.

[0006] In U.S. Pat. No. 3,724,467, an electrode implant is disclosed for the neural stimulation of the spinal cord. A relatively thin and flexible strip of physiologically inert plastic is provided with a plurality of electrodes formed thereon. The electrodes are connected by leads to a RF receiver, which is also implanted and controlled by an external controller. The implanted RF receiver has no power storage means, and must be coupled to the external controller in order for neural stimulation to occur.

[0007] In U.S. Pat. No. 3,822,708, another type of electrical spinal cord stimulating device is shown. The device has five aligned electrodes that are positioned longitudinally on the spinal cord and transversely to the nerves entering the spinal cord. Current pulses applied to the electrodes are said to block sensed intractable pain, while allowing passage of other sensations. The stimulation pulses applied to the electrodes are approximately 250 microseconds in width with a repetition rate of from 5 to 200 pulses per second. A patient-operable switch allows the patient to change which electrodes are activated, i.e., which electrodes receive the current stimulus, so that the area between the activated electrodes on the spinal cord can be adjusted, as required, to better block the pain. Other representative patents that show spinal cord stimulation systems or electrodes include U.S. Pat. Nos. 4,338,945; 4,379,462; 5,121,754; 5,417,719 and 5,501,703.

[0008] The dominant SCS products that are presently commercially available attempt to respond to three basic requirements for such systems: (1) providing multiple stimulation electrodes to address variable stimulation parameter requirements and multiple sites of electrical stimulation signal delivery; (2) allowing modest to high stimulation currents for those patients who need it; and (3) incorporating an internal power source with sufficient energy storage capacity to provide several years of reliable service to the patient. Unfortunately, not all of these features are available in any one device. For example, one known device has a limited battery life at only modest current outputs, and has only a single voltage source, and hence only a single stimulation channel (programmable voltage regulated output source), which provides a single fixed pattern to up to four electrode contacts. Another known device offers higher currents that can be delivered to the patient, but does not have a battery, and thus requires the patient to wear an external power source and controller. Even then, such device still has only one voltage source, and hence only a single stimulation channel, for delivery of the current stimulus to multiple electrodes through a multiplexer. Yet a third known device provides multiple channels of modest current capability, but does not have an internal power source, and thus also forces the patient to wear an external power source and controller. It is thus seen that each of the systems, or components, disclosed or described above suffers from one or more shortcomings, e.g., no internal power storage capability, a short operating life, none or limited programming features, large physical size, the need to always wear an external power source and controller, the need to use difficult or unwieldy surgical techniques and/or tools, unreliable connections, and the like. What is clearly needed, therefore, is a spinal cord stimulation system that is superior to existing systems by providing longer life through the use of a rechargeable battery, easier programming and more stimulating features in a smaller package without compromising reliability.

[0009] Regardless of the application, all implantable pulse generators are active devices requiring energy for operation, either powered by an implanted battery or an external power source. It is desirable for the implantable pulse generator to operate for extended periods of time with little intervention by the patient or caregiver. However, devices powered by primary (non-rechargeable) batteries have a finite lifetime before the device must be surgically removed and replaced. Frequent surgical replacement is not an acceptable alternative for many patients. If a battery is used as the energy source, it must have a large enough storage capacity to operate the device for a reasonable length of time. For low-power devices (less than 100 μW) such as cardiac pacemakers, a primary battery may operate for a reasonable length of time, often up to ten years. However, in many neural stimulation applications such as SCS, the power requirements are considerably greater due to higher stimulation rates, pulse widths, or stimulation thresholds. Powering these devices with conventional primary batteries would require considerably larger capacity batteries to operate them for a reasonable length of time, resulting in devices so large that they may be difficult to implant or, at the very least, reduce patient comfort. Therefore, in order to maintain a device size that is conducive to implantation, improved primary batteries with significantly higher energy densities are needed. However, given the state of the art in battery technology, the required energy density is not achievable at the present time.

[0010] If an implanted battery is not used as the power source, then a method is required to transcutaneously supply power to the IPG on a continuous basis. For applications that require large amounts of power such as heart pumps and other heart-assist devices, an external power source is the preferred choice. Power can be supplied to the device via a percutaneous cable, or more preferably and less invasively, coupled to the device through electromagnetic induction. The external power source can be an AC outlet or a DC battery pack, which may be recharged or replaced with new batteries when depleted. However, these systems obviously require the patient to continually wear an external device to power the implanted pulse generator, which may be unacceptable for many patients because they are often bulky and uncomfortable to wear, and naturally, limit patient mobility.

[0011] One alternative power source is the secondary, or rechargeable battery, where the energy in these batteries can be replenished by recharging the batteries on a periodic basis. It is known in the art to use a rechargeable battery within an implant device. See, e.g., U.S. Pat. No. 4,082,097, entitled "Multimode Recharging System for Living Tissue Stimulators", and applicant Carla Mann Wood's U.S. patent application Ser. No. 09/048,826, filed Mar. 25, 1998, entitled "System of Implantable Devices For Monitoring and/or Affecting Body Parameters", now U.S. Pat. No. 6,208,894 which patent and patent application are likewise incorporated herein by reference. The devices and methods taught in this patent and application, however, comprise specialized devices, e.g., microstimulators, or relate to specific applications, e.g., cardiac pacing, which impose unique requirements not applicable to many IPG applications. Cardiac pacemakers with rechargeable batteries have been developed in the past; see U.S. Pat. Nos. 3,454,012; 3,824,129; 3,867,950; 3,888,260; and 4,014,346. However, these devices were met with limited success in regards to battery performance and market acceptance. Many of these devices were powered by nickel-cadmium (NiCd) batteries. NiCd's low volumetric energy density of 100 Wh/liter provided limited energy storage, and frequent charging was required. Also, its low nominal cell voltage of 1.2 V required many cells to be stacked in series, requiring cells to be closely matched for optimum performance. NiCd batteries also suffered from a phenomenon called "memory effect," which causes the cell to lose capacity if cycled at shallow discharge depths. Moreover, NiCd batteries have a high self-discharge rate, losing approximately 30% of their capacity per month at body temperatures. Also, cycle life performance was poor, as NiCd batteries typically lasted fewer than 300 cycles. In addition, charging NiCd batteries was often problematic because the standard charge termination method for NiCd batteries is somewhat complicated, requiring the need to detect a zero or negative voltage slope (dV/dt) and/or temperature slope (dT/dt). When NiCd batteries are overcharged, an exothermic reaction occurs: oxygen gas given off at the nickel electrode recombines with the cadmium electrode to form cadmium hydroxide. Cell leakage or venting can occur as a result of the pressure increase in the cell. Furthermore, there may be disposal issues with NiCd batteries, as cadmium is highly toxic to the environment.

[0012] Newer battery technologies have been developed in recent years. The Nickel Metal-Hydride (NiMH) battery was developed to improve upon NiCd performance. NiMH batteries were first commercially introduced in 1990, and are in many ways similar to NiCd batteries. The main exception is the replacement of the cadmium electrode with a metal-hydride alloy, resulting in more than twice the volumetric energy density (>200 Wh/liter). In addition, the metal-hydride is less toxic than cadmium. However, NiMH batteries suffer from some of the same drawbacks as well, including low cell voltage (1.2 V), high self-discharge (>30% per month), difficult charge termination, low cycle life (<300 cycles), and to a lesser extent, memory effect.

[0013] Rechargeable lithium-based batteries were first developed in the 1970s using lithium metal as the active electrode material. Lithium has great promise as a battery material because it is the lightest of all metals, with high cell voltage (>3 V) and high energy density. However, lithium metal in its pure form is extremely reactive, and proved to be very unstable as a battery electrode as employed in early designs. In 1990, however, Sony Corporation introduced a safer rechargeable lithium-based battery called lithium-ion (Li-ion), which used a lithium composite oxide ($LiCoO_2$) cathode and a lithium-intercalating graphite anode. Lithium ions, or Li^+, instead of lithium metal, are shuttled back and forth between the electrodes (hence the nick-name, "rocking-chair" battery). Lithium-ion is superior to other rechargeable battery chemistries, with the highest volumetric energy density (>300 Wh/liter) and gravimetric energy density (>100 Wh/kg). In addition, Lithium-ion batteries have a high nominal voltage of 3.6 V, as well as low self-discharge (less than 10% per month), long cycle life (>500), and no memory effect. Charge termination for Lithium-ion batteries is also simpler than that of NiCd and NiMH batteries, requiring only a constant voltage cutoff. However, Lithium-ion batteries are not as tolerant to overcharging and overdischarging. If significantly overcharged, Lithium-ion batteries may go into "thermal runaway," a state in which the voltage is sufficiently high to cause the electrode/electrolyte interface to breakdown and evolve gas, leading to self-sustaining exothermic reactions. As a result,

cell leakage or venting can occur. If Lithium-ion batteries are over-discharged (<1 V), the negative electrode may dissolve and cause plating of the electrodes. This can lead to internal shorts within the cell, as well as possible thermal runaway. Therefore, careful monitoring of the cell voltage is paramount, and battery protection circuitry is necessary to keep the cell in a safe operating region.

[0014] It is known in the art to use a Lithium-ion battery in an implantable medical device, see. e.g., U.S. Pat. Nos. 5,411,537 and 5,690,693. However, such disclosed use requires careful avoidance of overcharge and overdischarging conditions, as outlined above, else the implant battery, and hence the implant device, is rendered useless.

[0015] The most recent development in rechargeable battery technology is the Lithium-ion polymer battery. Lithium-ion polymer batteries promise higher energy density, lower self-discharge and longer cycle life compared to conventional aqueous electrolyte Lithium-ion batteries. Its chemical composition is nearly identical to that of conventional Lithium-ion batteries with the exception of a polymerized electrolyte in place of the aqueous electrolyte. The polymer electrolyte enables the battery to be made lighter and thinner than conventional Lithium-ion batteries by utilizing foil packaging instead of a metal can, thus allowing it to be conformable to many form factors. Lithium-ion polymer batteries are also theoretically safer since the polymer electrolyte behaves more benignly when overcharged, generating less heat and lower internal cell pressure. Unfortunately, commercial realization of Lithium-ion polymer batteries has been slow and fraught with early production problems. Only recently have the major battery manufacturers (Sony, Panasonic, Sanyo) announced plans for Lithium-ion polymer battery production.

[0016] What is clearly needed for neural stimulation applications is a physically-small power source that either provides a large energy reservoir so that the device may operate over a sufficiently length of time, or a replenishable power source that still provides sufficient energy storage capacity to allow operation of the device over relatively long period of time, and which then provides a convenient, easy and safe way to refill the energy reservoir, i.e., recharge the battery, so that the device may again operate over a relatively long period of time before another refilling of the reservoir (recharging of the battery) is required.

SUMMARY OF THE INVENTION

[0017] A spinal cord stimulation (SCS) system that uses a rechargeable battery has been invented that is superior to existing systems. Because physically-small power sources suitable for implantation having sufficient capacity to power most neural stimulation applications do not yet exist, the power source used in an neural stimulation IPG (or other implantable medical device application) in accordance with the teachings of the present invention is a rechargeable battery. More particularly, the present invention is directed to the use of a rechargeable lithium-ion or lithium-ion polymer battery within an implantable medical device, such as an implantable pulse generator (IPG), coupled with the use of appropriate battery protection and battery charging circuits.

[0018] In accordance with one aspect of the invention, therefore, a lithium-ion or lithium-ion polymer rechargeable battery is used in combination with appropriate battery protection and charging circuitry housed within an implantable medical device, e.g., an IPG, of a medical system, e.g., an SCS system. Such use of a rechargeable battery advantageously assures the safe and reliable operation of the system over a long period of time. While a preferred embodiment of the invention is represented and described herein by way of a spinal cord stimulation (SCS) system, it is to be emphasized that the invention—directed to the use of a lithium-ion or lithium-ion polymer rechargeable battery in an implanted medical device, including appropriate battery protection and battery charging circuitry—may be used within any implantable medical device.

[0019] The representative SCS system with which the lithium-ion based rechargeable battery is employed in accordance with the present invention provides multiple channels, each able to produce up to 20 mA of current into a 1 KΩ load. To provide adequate operating power for such a system, the SCS system employs a rechargeable battery and charging/protection system that allows the patient to operate the device independent of external power sources or controllers. Moreover, the implanted battery is rechargeable using non-invasive means, meaning that the battery can be recharged as needed when depleted by the patient with minimal inconvenience. Advantageously, the SCS system herein described requires only an occasional recharge, is smaller than existing implant systems, has a life of at least 10 years at typical settings, offers a simple connection scheme for detachably connecting a lead system thereto, and is extremely reliable.

[0020] A key element of the SCS system herein described (or other system employing an implantable pulse generator, or "IPG") is the use of a rechargeable lithium-ion or lithium-ion polymer battery. Lithium-ion batteries offer several distinct advantages over other battery chemistries: high volumetric and gravimetric energy densities, high cell voltage, long cycle life, simple detection of charge termination, low toxicity, and no memory effect.

[0021] The lithium-ion or lithium-ion polymer battery used in the SCS system described herein is specifically designed for implantable medical devices. It incorporates several distinct features compared to conventional lithium-ion batteries. The battery case is made from a high-resistivity Titanium alloy to reduce heating from eddy currents induced from the electromagnetic field produced by inductive charging. The case is also hermetically-sealed to increase cycle life and shelf life performance. Most importantly, the battery is specifically designed to allow discharge to zero volts without suffering irreversible damage, which feature is referred to herein as "zero-volt technology". This feature is significant because conventional lithium-ion batteries can not operate at low voltages (less than about 1 V) without damage occurring to the negative electrode. Thus, should an implant device with a conventional lithium-ion battery be operated until the implanted battery is nearly discharged (~2.5 V), and if the battery is not subsequently recharged for any one of many reasons, the battery will naturally self-discharge to below 1 V in less than six months. If this occurs, the performance and safety of the cell may be compromised. In contrast, the present invention relates to an implantable electrical stimulator capable of recharging its lithium-ion battery from an electrical potential of 0 V up to normal operating voltages, e.g., approximately 4 V. The

invention takes advantage of new battery technology that allows discharge down to 0 V without damage to the cell.

[0022] In accordance with one aspect of the present invention, the SCS system utilizes a non-invasive, electromagnetic induction system to couple the energy from an external power source to the implanted charging circuitry for recharging the battery. The charging circuitry contains a charge controller that converts the unregulated induced power into the proper charging current. The level of the charging current is determined by a state machine-type algorithm that monitors the voltage level of the battery. In one embodiment, when the battery voltage is below 1 V, for example, the battery is charged with a very low current of C/50 (1/50 of the battery capacity) or less. When the battery voltage surpasses 1 V, the battery is charged at a rate of approximately C/25. When the battery voltage surpasses 2.5 V, the battery is charged at the maximum charge rate of approximately C/2, until the battery voltage nears its desired full-charge voltage, at which point the charge rate may again be reduced. That is, fast charging occurs at the safer lower battery voltages (e.g., voltage above about 2.5 V), and slower charging occurs when the battery nears full charge higher battery voltages (above about 4.0 V). When potentially less-than-safe very low voltages are encountered (e.g., less than 2.5 V), then very slow (trickle) charging occurs to bring the battery voltage back up to the safer voltage levels where more rapid charging can safely occur. This multi-rate charge algorithm minimizes charging time while ensuring the cell is safely charged. The charging circuitry also contains a battery protection circuit that continuously monitors the battery voltage and current. If the battery operates outside of a predetermined range of voltage or current, the battery protection circuitry disconnects the battery from the particular fault, i.e. charging circuitry or load circuits. Moreover, the charging circuitry is able to monitor the state-of-charge of the battery by measuring the voltage of the battery, since there is good correlation between battery voltage and state of charge in lithium-ion batteries.

[0023] In accordance with another aspect of the invention, an external charging system is provided that supplies the energy to the rechargeable battery of the IPG device. Such external charging system may take one of several forms or embodiments. In one embodiment, the external charger is powered by an alternating current (AC) power supply and is manually controlled by the patient. In another embodiment, the external charger is powered by an AC power supply and is automatically controlled by the external controller for the implanted device. Such embodiment necessarily employs a suitable communication link between the external controller and the external charger, the communication link comprising, e.g., a cable (hard wire connection), an infrared (IR) link, or a radio frequency (RF) link. In another preferred embodiment, the external charger is itself powered by a battery, which battery may be a replaceable (primary) battery, or a rechargeable battery.

[0024] The external charger may thus assume one of several forms, ranging from a table-top AC powered device to a small portable (mobile) device that uses a primary or secondary battery to transfer energy to the implanted device. In all instances, the electrical circuitry within the implanted device has final control upon the acceptance or rejection of incoming energy. The external charging system, however, is optimally controlled so that its operation is terminated if the implanted device does not require the external energy.

[0025] In operation, the SCS system (or other system employing an IPG) monitors the state of charge of the internal battery and controls the charging process. Then, through a suitable communication link, the SCS system is able to inform the patient or clinician regarding the status of the system, including the state of charge, and makes requests to initiate an external charge process. In this manner, the acceptance of energy from the external charger is entirely under the control of the implant circuitry, e.g., the IPG, and several layers of physical and software control may be used, as desired or needed, to ensure reliable and safe operation of the charging process. The use of such a rechargeable power source thus greatly extends the useful life of the SCS system, or other IPG systems. This means that once the IPG is implanted, it can, under normal conditions, operate for many years without having to be explanted.

[0026] All of the above and other features combine to provide a SCS system employing an IPG or similar implantable electrical stimulator (or other implantable electrical circuitry, such as an implantable sensor) having a rechargeable battery that is markedly improved over what has heretofore been available.

BRIEF DESCRIPTION OF THE DRAWINGS

[0027] The above and other aspects, features and advantages of the present invention will be more apparent from the following more particular description thereof, presented in conjunction with the following drawings wherein:

[0028] **FIG. 1** is a block diagram that illustrates the various implantable, external, and surgical components of an SCS system that employs an implantable pulse generator (IPG) having a rechargeable battery in accordance with the present invention;

[0029] **FIG. 2** shows various components of the SCS system of **FIG. 1**;

[0030] **FIG. 3** is a block diagram that illustrates the main components, including a rechargeable battery, of one embodiment of an implantable pulse generator (IPG) used with the invention;

[0031] **FIG. 4** is a block diagram that illustrates another embodiment of an implantable pulse generator (IPG) that may be used with the invention;

[0032] **FIG. 5** shows a representative screen on a hand-held patient programmer that may be used with the invention;

[0033] **FIG. 6** illustrates the external components of a representative portable charging system used by the invention;

[0034] **FIG. 7A** shows a block diagram of the battery charging system used with the invention;

[0035] **FIG. 7B** is a functional block diagram of the preferred misalignment and charge complete indicators used with the invention;

[0036] **FIG. 8** is a state diagram illustrating the various states that may be assumed by the implant battery charging circuitry during operation of the charging system;

[0037] **FIG. 9** shows a block diagram of the battery charger/protection circuitry utilized within the external charging station of the invention;

[0038] **FIG. 10A** depicts a sectional view of a preferred structure of a zero-volt technology lithium-ion battery usable with the invention; and

[0039] **FIG. 10B** depicts the battery voltage versus time when the lithium-Ion battery of **FIG. 10A** has been discharged to zero volts and is recharged using the recharging circuitry of the present invention.

[0040] Corresponding reference characters indicate corresponding components throughout the several views of the drawings.

DETAILED DESCRIPTION OF THE INVENTION

[0041] The following description is of the best mode presently contemplated for carrying out the invention. This description is not to be taken in a limiting sense, but is made merely for the purpose of describing the general principles of the invention. The scope of the invention should be determined with reference to the claims.

[0042] At the outset, it is noted that the present invention may be used with an implantable pulse generator (IPG), or similar electrical stimulator and/or electrical sensor, that may be used as a component of numerous different types of stimulation systems. The description that follows relates to use of the invention within a spinal cord stimulation (SCS) system. However, it is to be understood that the invention is not so limited. Rather, the invention may be used with any type of implantable electrical circuitry that could benefit from deriving its operating power from a rechargeable battery.

[0043] Further, while the invention is described in connection with its use within an SCS system, it is noted that a complete description of the SCS system is not provided herein. Rather, only those portions of the SCS system that relate directly to the present invention are disclosed. A more complete description of the SCS system may be found in U.S. Pat. No. 6,516,227, application Ser. No. 09/626,010, filed Jul. 26, 2000, which application is incorporated herein by reference.

[0044] Turning first to **FIG. 1, a** block diagram is shown that illustrates the various components of an SCS system wherein the invention may be used. These components may be subdivided into three broad categories: (1) implantable components **10**, (2) external components **20**, and (3) surgical components **30**. As seen in **FIG. 1**, the implantable components **10** include an implantable pulse generator (IPG) **100**, an electrode array **110**, and (as needed) a lead extension **120**. The extension **120** is used to electrically connect the electrode array **110** to the IPG **100**. In a preferred embodiment, the IPG **100**, described more fully below in connection with **FIG. 4** or **5**, comprises a rechargeable, multichannel, 16 contact, telemetry-controlled, pulse generator housed in a rounded high-resistivity titanium alloy case to reduce eddy current heating during the inductive charging process. The preferred embodiment includes 16 current sources, each with a programmable amplitude such that the device is a current-regulated, rather than a voltage-regulated system. Four pulse timing generators are used to create 4 independent groups in which any of 16 electrodes can be included in a positive or negative polarity. A connector that forms an integral part of the IPG **100** allows the electrode array **110** or extension **120** to be detachably secured, i.e., electrically connected, to the IPG **100**. This connector may be of the type described in U.S. patent application Ser. No. 09/239,926, filed Jan. 28, 1999, incorporated herein by reference.

[0045] The IPG **100** contains stimulating electrical circuitry ("stimulating electronics"), a power source, e.g.,a rechargeable battery, and a telemetry system. Typically, the IPG **100** is placed in a surgically-made pocket either in the abdomen, or just at the top of the buttocks. It may, of course, also be implanted in other locations of the patient's body. Once implanted, the IPG **100** is connected to the lead system, comprising the lead extension **120**, if needed, and the electrode array **110**. The lead extension **120**, for example, may be tunneled up to the spinal column. Once implanted, the lead system **110** and lead extension **120** are intended to be permanent. In contrast, the IPG **100** may be replaced when its power source fails or is no longer rechargeable.

[0046] Advantageously, the IPG **100** can provide electrical stimulation through a multiplicity of electrodes, e.g., sixteen electrodes, included within the electrode array **110**.

[0047] As seen best in **FIG. 2**, and as also illustrated in **FIG. 1**, the electrode array **110** and its associated lead system typically interface with the implantable pulse generator (IPG) **100** via a lead extension system **120**. The electrode array **110** may also be connect to an external trial stimulator **140**, through the use of a percutaneous lead extension **132** and/or an external cable **134**. The external trail stimulator **140** includes the same pulse generation circuitry as does the IPG **100**, and is used on a trial basis for, e.g., 7-10 days after the electrode array has been implanted, prior to implantation of the IPG **100**, in order to test the effectiveness of the stimulation that is to be provided.

[0048] Still with reference to **FIG. 2** and **FIG. 1**, the hand-held programmer (HHP) **202** may be used to control the IPG **100** via a suitable non-invasive communications link **203**, e.g., an RF link. Such control allows the IPG **100** to be turned ON or OFF, and generally allows stimulation parameters, e.g., pulse amplitude, width, and rate, to be set within prescribed limits. The HHP may also be linked with the external trial stimulator **140** through another link **205'**, e.g., an infra red link. Detailed programming of the IPG **100** is preferably accomplished through the use of an external clinician's programmer **204 (FIG. 1)** which is coupled to the IPG **100** through the HHP **202**. An external charger **208**, non-invasively coupled with the IPG **100** through link **209**, e.g., an inductive link, allows energy stored or otherwise made available to the charger **208** to be coupled into the rechargeable battery housed within the IPG **100**.

[0049] Turning next to **FIG. 3, a** block diagram is shown that illustrates the main components of one embodiment of an implantable pulse generator (IPG) **100** that may be used with the invention. As seen in **FIG. 3**, the IPG includes a microcontroller (μC) **160** connected to memory circuitry **162**. The μC **160** typically comprises a microprocessor and associated logic circuitry, which in combination with control logic circuits **166**, timer logic **168**, and an oscillator and clock circuit **164**, generate the necessary control and status signals which allow the μC to control the operation of the

IPG in accordance with a selected operating program and stimulation parameters. The operating program and stimulation parameters are typically stored within the memory **162** by transmitting an appropriate modulated carrier signal through a receiving coil **170** and charging and forward telemetry circuitry **172** from an external programming unit, e.g., a handheld programmer **202** and/or a clinician programmer **204**, assisted as required through the use of a directional device **206** (see **FIG. 1**). (The handheld programmer is thus considered to be in "telecommunicative" contact with the IPG; and the clinician programmer is likewise considered to be in telecommunicative contact with the handheld programmer, and through the handheld programmer, with the IPG.) The charging and forward telemetry circuitry **172** demodulates the carrier signal it receives through the coil **170** to recover the programming data, e..g, the operating program and/or the stimulation parameters, which programming data is then stored within the memory **162**, or within other memory elements (not shown) distributed throughout the IPG **100**.

[**0050**] The microcontroller **160** is further coupled to monitoring circuits **174** via bus **173**. The monitoring circuits **174** monitor the status of various nodes or other points **175** throughout the IPG **100**, e.g., power supply voltages, current values, temperature, the impedance of electrodes attached to the various electrodes E**1** . . . En, and the like. Informational data sensed through the monitoring circuit **174** may be sent to a remote location external to the IPG (e.g., a non-implanted location) through back telemetry circuitry **176**, including a transmission coil **177**.

[**0051**] The operating power for the IPG **100** is derived from a rechargeable power source **180**. In accordance with the teachings of the present invention, such rechargeable power source **180** comprises a lithium-ion or lithium-ion polymer battery. The advantages of using such batteries have been previously discussed. The rechargeable battery **180** provides an unregulated voltage to power circuits **182**. The power circuits **182**, in turn, generate the various voltages **184**, some of which are regulated and some of which are not, as needed by the various circuits located within the IPG. A particular feature of the present invention is the manner in which recharging occurs, on an as-needed basis, and wherein the power circuits **182** control the charging operation so that only energy that is needed is allowed to charge the battery, thereby preventing overcharging from occurring.

[**0052**] As indicated previously, the power source **180** of the IPG **100** comprises a rechargeable lithium-ion or lithium-ion polymer battery. Recharging occurs inductively from an external charger (shown below in **FIGS. 7 and 9**) to an implant depth of approximately 2 to 3 cm. For safety reasons, only authorized charging devices may be used to recharge the battery. The battery is chargeable to 80% of its capacity within two hours. Moreover, at an 80% charge, a single battery discharge is able to support stimulation at typical parameter settings on one channel (electrode group) for at least about three weeks; and on 4 channels for approximately one week, after 10 years of cycling. Additionally, the IPG **100** is able to monitor and telemeter the status of its rechargeable battery **180** each time a communication link is established with the external patient programmer **202**. Typically, a telecommunicative link is established, and hence battery monitoring may occur, each time a programming event occurs, i.e., each time the patient or medical personnel change a stimulus parameter.

[**0053**] As described, it is thus seen that any of the n electrodes may be assigned to up to k possible groups (where k is an integer corresponding to the number of channels, and in a preferred embodiment is equal to 4). Moreover, any of the n electrodes can operate, or be included in, any of the k channels. The channel identifies which electrodes are selected to synchronously source or sink current in order to create an electric field. Amplitudes and polarities of electrodes on a channel may vary, e.g., as controlled by the patient hand held programmer **202**. External programming software in the clinician programmer **204** is typically used to set parameters including electrode polarity, amplitude, pulse rate and pulse width for the electrodes of a given channel, among other possible programmable features.

[**0054**] Hence, it is seen that each of the n programmable electrode contacts can be programmed to have a positive (sourcing current), negative (sinking current), or off (no current) polarity in any of the k channels. Moreover, it is seen that each of the n electrode contacts can operate in a bipolar mode or multipolar mode, e.g., where two or more electrode contacts are grouped to source/sink current at the same time. Alternatively, each of the n electrode contacts can operate in a monopolar mode where, e.g., the electrode contacts associated with a channel are configured as cathodes (negative), and the case electrode, on the IPG case, is configured as an anode (positive).

[**0055**] Further, in the preferred embodiment, the amplitude of the current pulse being sourced or sunk from a given electrode contact may be programmed to one of several discrete current levels, e.g. ±0 to ±10 mA, in steps of 0.1 mA. Also, in the preferred embodiment, the pulse width of the current pulses is adjustable in convenient increments. For example, the pulse width range is preferably at least 0 to 1 milliseconds (ms) in increments of 10 microseconds (μs). Similarly, in the preferred embodiment, the pulse rate is adjustable within acceptable limits. For example, the pulse rate preferably spans 0-1000 Hz. Other programmable features can include slow start/end ramping, burst stimulation cycling (on for X time, off for Y time), and open or closed loop sensing modes.

[**0056**] The stimulation pulses generated by the IPG **100** are charged balanced. This means that the amount of positive charge associated with a given stimulus pulse must be offset with an equal and opposite negative charge. Charge balance may be achieved through a coupling capacitor, which provides a passive capacitor discharge that achieves the desired charge balanced condition. Alternatively, active biphasic or multi-phasic pulses with positive and negative phases that are balanced may be used to achieve the needed charge balanced condition.

[**0057**] The type of bi-directional current sources depicted in **FIG. 3** may be realized by those of skill in the art using the teachings of U.S. Pat. No. 6,181,969, application Ser. No. 09/338,700, filed Jun. 23, 1999, entitled "Programmable Current Output Stimulus Stage for Implantable Device", which patent is incorporated herein by reference.

[**0058**] Advantageously, by using current sources of the type disclosed in the referenced patent application, or equivalent, the IPG **100** is able to individually control the n

electrode contacts associated with the n electrode nodes E1, E2, E3, . . . En. Controlling the current sources and switching matrix **188** using the microcontroller **160**, in combination with the control logic **166** and timer logic **168**, thereby allows each electrode contact to be paired or grouped with other electrode contacts, including the monopolar case electrode, in order to control the polarity, amplitude, rate, pulse width and channel through which the current stimulus pulses are provided. Other output circuits can be used with the invention, including voltage regulated output, multiplexed channels, and the like.

[**0059**] As shown in **FIG. 3**, much of circuitry included within the IPG **100** may be realized on a single application specific integrated circuit (ASIC) **190**. This allows the overall size of the IPG **100** to be quite small, and readily housed within a suitable hermetically-sealed case. The IPG **100** includes n feedthroughs to allow electrical contact to be individually made from inside of the hermetically-sealed case with the n electrodes that form part of the lead system outside of the case. The IPG case is preferably made from titanium and is shaped in a rounded case, as illustrated, e.g., in **FIG. 2**. The rounded IPG case has a maximum circular diameter D of about 50 mm, and preferably only about 45 mm (or equivalent area). The implant case has smooth curved transitions that minimize or eliminate edges or sharp corners. The maximum thickness W of the case is about 10 mm. Other materials, e.g. ceramic, can be used that provide less shielding between the recharging coils, and thus improving efficiency.

[**0060**] It is thus seen that the implant portion **10** of the SCS system of the present invention (see **FIG. 1**) includes an implantable pulse generator (IPG) **100** with a rechargeable battery **180** as described in **FIG. 4**. Such IPG further includes stimulating electronics (comprising programmable current sources and a switching matrix and associated control logic), and a telemetry system. Advantageously, the rechargeable battery **180** may be recharged repeatedly as needed.

[**0061**] In use, the IPG **100** is placed in a surgically-made pocket either in the abdomen, or just at the top of the buttocks, and detachably connected to the lead system (comprising lead extension **120** and electrode array **110**). While the lead system is intended to be permanent, the IPG may be replaced should its power source fail, or for other reasons. Thus, a suitable connector, e.g., the snap-on toolless connector disclosed in U.S. patent application Ser. No. 09/239,926, filed Jan. 28, 1999, or other suitable connectors, may advantageously be used to make the connection between the lead system and the IPG **100**. This '926 patent application is incorporated herein by reference.

[**0062**] Once the IPG **100** has been implanted, and the implant system **10** is in place, the system is programmed to provide a desired stimulation pattern at desired times of the day. The stimulation parameters that can be programmed include the number of channels (defined by the selection of electrodes with synchronized stimulation), the stimulation rate and the stimulation pulse width. The current output from each electrode is defined by polarity and amplitude.

[**0063**] The back telemetry features of the IPG **100** allow the status of the IPG to be checked. For example, when the external hand-held programmer **202** (and/or the clinician programmer **204**), initiates a programming session with the implant system **10** (**FIG. 1**), the capacity of the battery is telemetered so that the external programmer can calculate the estimated time to recharge. Any changes made to the current stimulus parameters are confirmed through back telemetry, thereby assuring that such changes have been correctly received and implemented within the implant system. Moreover, upon interrogation by the external programmer, all programmable settings stored within the implant system **10** may be uploaded to one or more external programmers.

[**0064**] Turning next to **FIG. 4, a** hybrid block diagram of an alternative embodiment of an IPG **100'** that may be used with the invention is illustrated. The IPG **100'** includes both analog and digital dies, or integrated circuits (IC's), housed in a single hermetically-sealed rounded case having a diameter of about 45 mm and a maximum thickness of about 10 mm. Many of the circuits contained within the IPG **100'** are identical or similar to the circuits contained within the IPG **100**, shown in **FIG. 3**. The IPG **100'** includes a processor die, or chip, **160'**, an RF telemetry circuit **172'** (typically realized with discrete components), a charger coil **171'**, a lithium ion or lithium ion polymer battery **180**, battery charger and protection circuits **182'**, memory circuits **162'** (SEEROM) and **163'** (SRAM), a digital IC **191'**, an analog IC **190'**, and a capacitor array and header connector **192'**.

[**0065**] The capacitor array and header connector **192'** includes 16 output decoupling capacitors, as well as respective feed-through connectors for connecting one side of each decoupling capacitor through the hermetically-sealed case to a connector to which the electrode array **110**, or lead extension **120**, may be detachably connected.

[**0066**] The processor **160'** is realized with an application specific integrated circuit (ASIC) that comprises the main device for full bi-directional communication and programming. The processor **160'** utilizes a 8086 core (the 8086 is a commercially-available microprocessor available from, e.g., Intel, or a low power equivalent thereof, 16 kilobytes of SRAM memory, two synchronous serial interface circuits, a serial EEPROM interface, and a ROM boot loader **735**. The processor die **160'** further includes an efficient clock oscillator circuit **164'** and a mixer and modulator/demodulator circuit implementing the QFAST RF telemetry method supporting bi-directional telemetry at 8 Kbits/second. QFAST stands for "Quadrature Fast Acquisition Spread Spectrum Technique", and represents a known and viable approach for modulating and demodulating data. The QFAST RF telemetry method is further disclosed in U.S. Pat. No. 5,559,828, incorporated herein by reference. An analog-to-digital converter (A/D) circuit **734** is also resident on the processor **160'** to allow monitoring of various system level analog signals, impedances, regulator status and battery voltage. In the preferred embodiment, the A/D converter circuit **734** comprises a twelve-bit A/D converter. The processor **160'** further includes the necessary communication links to other individual ASIC's utilized within the IPG **100'**. The processor **160'**, like all similar processors, operates in accordance with a program that is stored within its memory circuits.

[**0067**] The analog IC (AIC) **190'** comprises an ASIC that functions as the main integrated circuit that performs several tasks necessary for the functionality of the IPG **100'**, including providing power regulation, stimulus output, and impedance measurement and monitoring. Electronic circuitry **194'**

performs the impedance measurement and monitoring function. The main area of the analog **190'** is devoted to the current stimulus generators **186'**. These generators **186'** may be realized using the circuitry described in the previously-referenced patent application, or similar circuitry. These generators **186'** are designed to deliver up to 20 mA aggregate and up to 12.7 mA on a single channel in 0.1 mA steps, which resolution requires that a seven (7) bit digital-to-analog (DAC) circuit be employed at the output current DAC **186'**. Regulators for the IPG **100'** supply the processor and the digital sequencer with a voltage of 2.7 V±10%. Digital interface circuits residing on the AIC **190'** are similarly supplied with a voltage of 2.7 V±10%. A regulator programmable from 5V to 18V supplies the operating voltage for the output current DACs **186'**. The output current sources on the analog IC thus include sixteen bi-directional output current sources, each configured to operate as a DAC current source. Each DAC output current source may source or sink current, i.e., each DAC output current source is bi-directional. Each DAC output current source is connected to an electrode node. Each electrode node, in turn, is connected to a coupling capacitor Cn. The coupling capacitors Cn and electrode nodes, as well as the remaining circuitry on the analog IC **186'**, are all housed within the hermetically sealed case of the IPG **100**. A feedthrough pin, which is included as part of the header connector **192'**, allows electrical connection to be made between each of the coupling capacitors Cn and the respective electrodes E**1**, E**2**, E**3**, . . . , or E**16**, to which the DAC output current source is associated.

[**0068**] The digital IC (DigIC) **191'** functions as the primary interface between the processor **160'** and the AIC output circuits **186'**. The main function of the DigIC **191'** is to provide stimulus information to the output current generator register banks. The DigIC **191'** thus controls and changes the stimulus levels and sequences when prompted by the processor **160'**. In a preferred embodiment, the DigIC **191'** comprises a digital application specific integrated circuit (digital ASIC).

[**0069**] The RF circuitry **172'** includes antennas and preamplifiers that receive signals from the HHP **202** and provide an interface at adequate levels for the demodulation/modulation of the communication frames used in the processor **160'**. Any suitable carrier frequency may be used for such communications. In a preferred embodiment, the frequency of the RF carrier signal used for such communications is 262.144 KHz, or approximately 262 KHz. A transmitter section receives digital transmit signals from the quadrature components, Txl and TxQ, of the data as generated on the 262 KHz carrier. The Txl and TxQ signals are coupled directly into the antenna during transmit. Additionally, the transmit section couples the antenna to the receiver during a receive mode. The transmitter section is responsible for antenna tunning and coupling while minimizing the processor noise to the RF signal. Appendix B contains additional information regarding the RF communications that occur between the IPG and external devices, e.g., the handheld programmer **202**.

[**0070**] A receiver portion of the RF circuitry **172'** receives an incoming RF signal through a coupling circuit, amplifies the signal, and delivers it to a mixer located inside of the processor **160'**.

[**0071**] The RF circuitry **172'** also includes an antenna. The antenna, in a preferred embodiment, comprises a ferrite rod located in an epoxy header of the IPG case. The antenna makes electrical connection to the IPG circuitry via two feedthrough pins included within the header connector **192'** (the other pins providing electrical connection to the individual electrodes located in the electrode array **110**).

[**0072**] The Battery Charger and Protection Circuits **182'** provide battery charging and protection functions for the Lithium Ion battery **180**. A charger coil **171'** inductively (i.e., electromagnetically) receives rf energy from the external charging station. The battery **180** preferably has a 720 mWHr capacity. The preferred battery **180** has a life of 500 cycles over 10 years with no more than 80% loss in capacity. The battery charger circuits perform three main functions: (1) during normal operation, they continually monitor the battery voltage and provide charge status information to the patient at the onset of a communication link, (2) they ensure that the battery is not over-discharged, and (3) they monitor the battery voltage during a charging cycle to ensure that the battery does not experience overcharging. These functions are explained in more detail below in conjunction with **FIGS. 7, 8** and **9**.

[**0073**] Next, a representation of one embodiment of the HHP **202** is shown in **FIG. 5**. As seen in **FIG. 5**, the HHP includes a lighted display screen **240** and a button pad **241** that includes a series of buttons **242**, **243**, **244** and **245**. (The number of buttons shown in **FIG. 5** is exemplary only; any number of buttons may be employed.) The buttons provided within the button pad **241** allow the IPG to be tuned ON or OFF, provide for the adjustment or setting of up to three parameters at any given time, and provide for the selection between channels or screens. Some functions or screens may be accessible by pressing particular buttons in combination or for extended periods of time. In a preferred embodiment, the screen **240** is realized using a dot matrix type graphics display with 55 rows and 128 columns.

[**0074**] The button pad **241**, in a preferred embodiment, comprises a membrane switch with metal domes positioned over a flex circuit, which bonds to the top housing of the HHP. A keypad connector connects directly a printed circuit board (PCB) of the HHP, and the bonding to the housing seals the connector opening.

[**0075**] In a preferred embodiment, the patient handheld programmer **202** is turned ON by pressing any button, and is automatically turned OFF after a designated duration of disuse, e.g., 1 minute. One of the buttons, e.g., the IPG button **242**, functions as an ON-OFF button for immediate access to turn the IPG on and off. When the IPG is turned ON, all channels are turned on to their last settings. If slow start/end is enabled, the stimulation intensity is ramped up gradually when the IPG (or ETS) is first turned ON with the HHP. When the IPG is turned OFF, all channels are turned off. If slow start/end is enabled, the stimulation intensity may be ramped down gradually rather than abruptly turned off. Another of the buttons, e.g., the SEL button **243**, functions as a "select" button that allows the handheld programmer to switch between screen displays and/or parameters. Up/down buttons **244** and **245** provide immediate access to any of three parameters, e.g., amplitude, pulse width, and rate.

[**0076**] Also included on the screens shown on the display **240** of the handheld programmer **202** are status icons or

other informational displays. A battery recharge countdown number **246** shows the estimated time left before the battery of the IPG needs to be recharged. A battery status icon **248** further shows or displays the estimated implant battery capacity. This icon flashes (or otherwise changes in some fashion) in order to alert the users when a low battery condition is sensed. Every time the patient programmer is activated to program or turn on the IPG, the actual battery status of the implanted pulse generator (IPG) is interrogated and retrieved by telemetry to reconcile actual verses estimated battery capacity. Other status icons **250** are provided that display the status of the patient-programmer-to-implant link and the patient-programmer-to-clinician-programmer link.

[**0077**] As a safety feature, the physician may lock out or set selectable parameter ranges via the fitting station to prevent the patient from accessing undesirable settings (i.e., a lockout range). Typically, locked parameters are dropped from the screen display.

[**0078**] The main screen displayed by default upon activation of the handheld programmer **202** shows amplitude and rate by channel, as illustrated in **FIG. 5**. As shown in **FIG. 5**, the display is for channel **1**, the amplitude is 7.2 ma, and the rate is 100 pps. Thus, it is seen that the channel number (or abbreviated channel name as set by the clinician programmer) is displayed on the screen with the parameters. Amplitude is the preferred default selection (i.e., it is the parameter that is displayed when the unit is first turned ON).

[**0079**] Whenever a displayed parameter is changed, the settings of the IPG **100** are changed via telemetry to reflect the change. However, in order to assure that the IPG has received the telemetry signal and made the corresponding change without a discrepancy between the IPG and the value displayed, a back telemetry response must be received from the IPG before the screen value changes. Only the parameters that have not been locked out from the clinician's programming station are adjustable. Further, only those channels that have electrodes programmed for stimulation are selectable.

[**0080**] Turning next to **FIG. 6**, the external components of a representative portable charging system used with the invention are illustrated. The recharging system is used to transcutaneously recharge the implant battery **180** of the IPG **100** as needed, via inductive coupling. Recharging typically occurs at a rate of approximately C/2 (current equal to one-half battery capacity). In order to recharge the battery from a completely discharged state to 80% capacity, approximately two hours recharge time is required. Because of this time, a portable charger system is preferred. Hence, as seen in **FIG. 8, a** two part system is preferred comprising a portable charger **208** and a base station **210**. The base station **210** is connected to an AC plug **211**, and may thus be easily plugged into any standard 110 VAC outlet. The portable charger **208** includes recharging circuitry housed within a housing **270** that may be detachably inserted into the charging port **210** in order to be recharged. Thus, both the IPG **100** and the portable charger **208** are rechargeable. The housing **270** is returned to the charging port **210** between uses.

[**0081**] For the "Package B" embodiment shown in **FIG. 6, a** charging head **272** is connected to the recharging circuitry **270** by way of a suitable flexible cable **274**. When the IPG battery needs to be recharged, a disposable adhesive pouch **276**, double sided adhesive, or a Velcro® strip is placed on the patient's skin, over the location where the IPG is implanted. For patients with adhesive allergies, a flexible belt with an attachment means for the charger is provided such that the patient can secure the charger over the implant. The charging head **272** is then simply slid into the pouch, adhered to the adhesive, or fastened to the strip, so that it is Within 2-3 cm of the IPG **100**.

[**0082**] In order for efficient transfer of energy to the IPG, it is important that the head **272** (or more particularly, the coil within the head **272**) be properly aligned with the IPG. Thus, in a preferred embodiment, a speaker generates an audio tone when the two devices are not aligned, or misaligned. The misalignment indicator is activated by sensing a change in the charge coil voltage, which reflects a change in the reflected impedance, as discussed in more detail below. When the coil voltage is greater than a predetermined value, a beeping or other audible tone and/or visual indicator is activated. When the coil voltage drops below this value, the beeping or tone or visual indicator turns off. The advantage of such a feature is that should the device move out of range of the implant (more likely with a non-adhesive attachment mechanism), the misalignment indicator is activated resulting in a beeping sound or other recognizable indicator so that the patient is immediately informed to readjust the position of the charging device. A misalignment indicator may also be implemented in visual form, such as a light emitting diode (LED).

[**0083**] The external charging device also has a state of charge indicator, i.e. an LED, or an audio tone, to indicate when the external battery is fully charged. This feature can also be included in a primary battery operated charger, so that a new battery is required for each charge session. When charging the implant, the charger battery would be depleted. A charge completion indicator is also provided such that when the charger battery is nearly depleted, a distinct tone is generated to alert the user. Also, back-telemetry with the IPG allows the charging process to be monitored. When the implant battery is fully charged, a signal will be communicated from the implant to the charger, and a distinct audio tone will be generated to alert the user.

[**0084**] An alternative embodiment of the portable charger **208** includes the recharging circuitry and battery and charging head housed within a single round or oval shaped package **272**, as also shown in **FIG. 6** (labeled "Package A"). Such package is approximately three inches in diameter and is comfortable to hold against the skin. The adhesive pouch **276** need not necessarily comprise a pouch, but may utilize any suitable means for holding the head (coil) of the charger **208** in proper alignment with the IPG, such as Velcro® strips or adhesive patches.

[**0085**] Turning next to **FIG. 7A, a** block diagram of the recharging elements of the invention is illustrated. As shown in **FIG. 7**A, (and as also evident in **FIGS. 3 and 4**), the IPG **100** is implanted under the patient's skin **278**. The IPG includes a replenishable power source **180**, such as a rechargeable battery. It is this replenishable power source that must be replenished or recharged on a regular basis, or as needed, so that the IPG **100** can carry out its intended function. To that end, the recharging system of the present invention uses the portable external charger **208** to couple

energy, represented in **FIG. 7A** by the wavy arrow **290**, into the IPG's power source **180**. The portable external charger **208**, in turn, obtains the energy **290** that it couples into the power source **180** from its own battery **277**.

[**0086**] The battery **277** in the charger **208**, in the preferred embodiment, comprises a rechargeable battery, preferably a Lithium-lon battery or a lithium-ion polymer battery. (Alternatively, the battery **277** may comprise a replaceable battery.) When a recharge is needed, energy **293** is coupled to the battery **277** via the charging base station **210** in conventional manner. The charging base station **210**, in turn, receives the energy it couples to the battery **277** from an AC power line **211**. A power amplifier **275**, included within the portable charger **208**, enables the transfer of energy from the battery **277** to the implant power source **180**. Such circuitry **275** essentially comprises DC-to-AC conversion circuitry that converts dc power from the battery **277** to an ac signal that may be inductively coupled through a coil **279** located in the external charging head **272** (or within the round case **272'**, see **FIG. 6**) with another coil **680** included within the IPG **100**, as is known in the art. Upon receipt of such ac signal within the IPG **100**, it is rectified by rectifier circuitry **682** and converted back to a dc signal which is used to replenish the power source **180** of the implant through a charge controller IC **684**. A battery protection IC **686** controls a FET switch **688** to make sure the battery **180** is charged at the proper rate, and is not overcharged. A fuse **689** also protects the battery **180** from being charged with too much current. The fuse **689** also protects from an excessive discharge in the event of an external short circuit.

[**0087**] Thus, from **FIG. 7**A, it is seen that the battery charging system consists of external charger circuitry **208**, used on an as-needed basis, and implantable circuitry contained within the IPG **100**. In the charger **208**, the rechargeable Lithium-ion battery **277** (recharged through the base station **210**), or equivalent, provides a voltage source for the power amplifier **275** to drive the primary coil **279** at a resonant frequency. The secondary coil **680**, in the IPG **100**, is tuned to the same resonant frequency, and the induced AC voltage is converted to a DC voltage by rectifier circuit **682**. In a preferred embodiment, the rectifier circuit **682** comprises a bridge rectifier circuit. The charge controller IC **684** coverts the induced power into the proper charge current and voltage for the battery. The battery protection IC **686**, with its FET switch **688**, is in series with the charge controller **684**, and keeps the battery within safe operating limits. Should an overvoltage, undervoltage, or short-circuit condition be detected, the battery **180** is disconnected from the fault. The fuse **689** in series with the battery **180** provides additional overcurrent protection. Charge completion detection is achieved by a back-telemetry transmitter **690**, which transmitter modulates the secondary load by changing the full-wave rectifier into a half-wave rectifier/voltage clamp. This modulation is, in turn, sensed in the charger **208** as a change in the coil voltage due to the change in the reflected impedance. When detected, an audible alarm is generated through a back telemetry receiver **692** and speaker **693**. Reflected impedance due to secondary loading is also used to indicate charger/IPG alignment, as explained in more detail below in conjunction with the description of **FIG. 9**.

[**0088**] In a preferred embodiment, and still with reference to **FIG. 7**A, the charge coil **680** comprises a 36 turn, single layer, 30 AWG copper air-core coil, and has a typical inductance of 45 μH and a DC resistance of about 1.15 ohms. The coil **680** is tuned for resonance at 80 KHz with a parallel capacitor. The rectifier **682** comprises a full-wave (bridge) rectifier consisting of four Schottky diodes. The charge controller IC **684** comprises an off-the-shelf, linear regulation battery charger IC available from Linear Technology as part number LTC1731-4.1. Such charger is configured to regulate the battery voltage to 4.1 VDC. When the induced DC voltage is greater than 4.1 VDC (plus a 54 mV dropout voltage), the charge controller **684** outputs a fixed constant current of up to 80 mA, followed by a constant voltage of 4.1±0.05 V. If insufficient power is received for charging at the maximum rate of 80 mA, the charge controller **684** reduces the charge current so that charging can continue. Should the battery voltage fall below 2.5 V, the battery is trickled charged at 10 mA. The charge controller **684** is capable of recharging a battery that has been completely discharged to zero volts. When the charge current drops to 10% of the full-scale charge current, or 8 mA, during the constant voltage phase, an output flag is set to signal that charging has completed. This flag is used to gate the oscillator output for modulating the rectifier configuration (full-wave to half-wave), which change in rectifier configuration is sensed by the external charging circuit to indicate charge completion.

[**0089**] The battery protection IC **686**, in the preferred embodiment, comprises an off-the-shelf IC available from Motorola as part number MC33349N-3R1. This IC monitors the voltage and current of the implant battery **180** to ensure safe operation. Should the battery voltage rise above a safe maximum voltage, then the battery protection IC **686** opens the charge-enabling FET switches **688** to prevent further charging. Should the battery voltage drop below a safe minimum voltage, or should the charging current exceed a safe maximum charging current, the battery protection IC **686** prevents further discharge of the battery by turning off the charge-enabling FET switches **688**. In addition, as an additional safeguard, the fuse **689** disconnects the battery **180** if the battery charging current exceeds 500 mA for at least one second.

[**0090**] In a preferred embodiment, the charge-enabling FET switches **688** comprise a Charge FET and a Discharge FET connected in series similar to the FETs **701** and **701** shown in **FIG. 9**. In the event of a sensed malfunction, the protection IC **686** switches off the battery **180** by turning off one of the two FET switches **688**. If the battery voltage is greater than a predetermined value, the Charge FET is turned off to block further charging. Conversely, if the battery voltage is less than a predetermined value, the Discharge FET turns off to block further discharging. If the battery voltage is zero, both the Charge FET and the Discharge FET turn off since the Battery Protection circuit is powered directly from the battery. Only when a charge voltage greater than V_GS, or the gate-source threshold voltage, of the Charge FET is applied (which is approximately 1.5 volts) will charging resume at a rate lower than normal charging, i.e., 10% fo the normal rate, until the voltage has reached a predetermined level.

[**0091**] Turning next to **FIG. 7B, a** summary of the preferred misalignment detection circuitry and charge completion detection circuitry used by the invention is illustrated. As seen in **FIG. 7**B, an external power source **277**, e.g., a rechargeable or replaceable battery, drives a class E oscil-

lator **275**, which applies an ac signal, e.g., a signal of about 80 KHz, to the primary coil **279**, which coil is also labeled L1 in **FIG. 7B**. The voltage V_R at the coil L1 is monitored by a first voltage detection circuit **695** and by a second voltage detection circuit **697**. Both of the voltage detection circuits **695** and **697** are connected to a speaker **693**, or equivalent audible-tone generator.

[**0092**] The coil L1 couples energy **290** through the skin **278** of the user to an implanted coil L2 (also referred to as coil **680**) that is part of the implanted device. The coil L2 inductively (electromagnetically) receives the ac signal **290**. That is, the ac signal **290** is induced in the coil L2 as a result of the alternating magnetic field that is created when the signal is applied to the external coil L1. The alternating signal received at coil L2 is rectified by the switch regulator **682**, thereby creating a dc voltage that is applied to charging and protection circuitry **685** for delivery to the implanted rechargeable battery **180**. The battery **180**, in turn, provides operating power for the electronic circuitry **687** included within the implant device so that such device may carry out its intended function, e.g., provide stimulation pulses through implanted electrodes to desired nerves or body tissue. The circuitry **685** controls how much charging current is applied to the battery **180** and monitors the battery voltage. The switch regulator **682** operates as either a full-wave rectifier circuit or a half-wave rectifier circuit as controlled by a control signal SW1 generated by the charging and protection circuitry **685**.

[**0093**] In normal operation, that is, when the battery **180** has been depleted and is receiving a charge, the switch rectifier **682** operates as a full-wave rectifier circuit. During this time, assuming that the coils L1 and L2 are properly aligned, the voltage V_R sensed by voltage detector **695** is at a minimum level because a maximum energy transfer is taking place. Should the coils L1 and L2 become misaligned, then less than a maximum energy transfer occurs, and the voltage V_R monitored by detection circuit **695** significantly increases. If the voltage V_R is greater than a prescribed threshold level, then voltage detection circuit **695** causes the speaker **693** to emit a fist audible sound, which first audible sound indicates a misaligned condition. As soon as the coils L1 and L2 are placed in proper alignment, an optimum energy transfer condition is established, causing the voltage V_R to decrease below the threshold, thereby causing the detection circuit **695** to cease emitting the first audible sound. In this manner, then, it is seen that the detection circuit **695** operates as a misalignment detector, providing audible feedback as to when a misaligned condition between the coils L1 and L2 is present. Visual feedback could also be provided, if desired.

[**0094**] As the battery **180** continues to be charged, the charging and protection circuitry continue to monitor the charge current and battery voltage. When the charge current and battery voltage reach prescribed levels, which prescribed levels are indicative of a fully charged battery, the signal SW1 is generated by the charging and protection circuitry **685**. The signal SW1, in turn, causes the switch rectifier circuit **682** to switch to half-wave rectifier operation. When this change occurs, the voltage V_R sensed by voltage detector **697** suddenly changes from a minimal peak-to-peak amplitude to a larger peak-to-peak amplitude, as shown in **FIG. 7B**. The detector **697** is adapted to sense this sudden transient or pulsed change in amplitude, and in response thereto causes a 2nd audible sound, e.g., a beeping sound, to be generated through the speaker **693**. This second audible sound thus signals the user that the battery is fully charged. Visual feedback could be used in lieu of, or in addition to, the 2nd audible sound, if desired.

[**0095**] It is noted that the operation of the misalignment and full-charge detection circuits, illustrated in **FIG. 7**B, operate without the use of conventional rf backtelemetry signals being sent from the implanted device to an external device. In practice, such conventional backtelemetry rf signals may be used to signal the hand held programmer (HHP), when placed in telecommunicative contact with the implanted device, in order to provide a status report regarding the state of the charge of the battery **180** or other conditions within the implant device. However, it should be noted that the switch rectifier **682** may be modulated, by switching back and forth between full-wave and half-wave conditions, in order to create data words in the modulation pattern of the voltage V_R that may be sensed and decoded at the external device, thereby providing a means for backtelemetry communication without using conventional rf signal generation, modulation, and transmission.

[**0096**] Next, with reference to **FIG. 8, a** state diagram that shows the various charging states that may occur in a preferred embodiment of the invention relative to the implant battery **180** is shown. As seen in **FIG. 8**, and assuming a preferred lithium-ion or lithium-ion polymer battery is used, a normal state **710** reflects that the battery voltage and charging current are within appropriate limits. An over voltage state **712** exists when the battery voltage is greater than about 4.25 V and continues to exist until the battery voltage is less than about 4.05 V. An undervoltage state **714** exists when the battery voltage is less than 2.5 volts. The undervoltage state **714** continues to exist until the battery voltage is greater than 2.5 volts while charging at a prescribed trickle charge current, e.g., 10 mA. An overcurrent (charging) state **716** exists whenever the charging current exceeds 80 mA. If, while in the overcurrent (charging) state **716**, the battery voltage is greater than 4.25 volts, then the over voltage state **712** is entered. If, while in the overcurrent (charging) state **716**, the charging current exceeds 500 mA for more than one minute, the fuse **689** opens, and a cell disconnect state **720** is permanently entered. An overcurrent (discharging) state **718** is entered whenever the battery charging current is greater than 100 mA, and continues until the battery charging current is less than 100 mA. If, while in the overcurrent (discharging) state **718**, the battery voltage drops below 2.5 volts, then the under voltage state **714** is entered. Also, should the battery current exceed 500 mA for more than one minute while in the overcurrent (discharging) state **718**, the fuse **689** opens, and the cell disconnect state **720** is permanently entered.

[**0097**] Thus, it is seen that through operation of the states shown in **FIG. 8**, the rechargeable battery **180** is fully protected from all conditions—overvoltage, undervoltage, overcharge, and undercharge—that may exist and which could potentially damage the battery or shorten its operating life.

[**0098**] Turning next to **FIG. 9, a** block diagram of the preferred circuitry within the external charging station **208** is shown. The charging station comprises a portable, non-invasive transcutaneous energy transmission system

designed to fully charge the implant battery in under three hours (80% charge in two hours). Energy for charging the IPG battery **180** initially comes from the main supply line **211**, and is converted to 5 VDC by an AC-DC transformer **694**, which 5 VDC proves the proper supply voltage for the charger base station **210**. When the charger **208** is placed on the charger base station **210**, the Lithium-ion battery **277** in the charger is fully charged in approximately four hours. Once the battery **277** is fully charged, it has enough energy to fully recharge the implant battery **180** (**FIG. 7A** or **FIG. 7B**). If the charger **208** is not used and left on the charger base station **210**, the battery **277** will self-discharge at a rate of about 10% per month.

[**0099**] Still with reference to **FIG. 9**, once the voltage of the battery **277** falls below a first prescribed limit, e.g., 4.1 VDC, during a standby mode, charging of the battery is automatically reinitiated. In addition, should the external charger battery **277** be discharged below a second prescribed limit, e.g., 2.5 VDC, the battery **277** is trickled charged until the voltage is above the second prescribed limit, at which point normal charging resumes.

[**0100**] A battery protection circuit **698** monitors if an over voltage, under voltage, or overcurrent condition occurs, and disconnects the battery, e.g, through opening at least one of the FET switches **701** and/or **702**, or from the fault until normal operating conditions exist. Another switch **699**, e.g., a thermal fuse, will disconnect the battery should the charging or discharging current exceed a prescribed maximum current for more than a prescribed time, e.g., 1.5 A for more than 10 seconds.

[**0101**] The battery **277** provides a power source for the RF amplifier **275**. The RF amplifier, in a preferred embodiment, comprises a class E amplifier configured to drive a large alternating current through the coil **279**.

[**0102**] Still with reference to **FIG. 9**, an alignment detection circuit **695** detects the presence of the IPG **100** through changes in the reflected impedance on the coil **279**, as described above in connection with **FIG. 7B**. Reflected impedance is a minium when proper alignment has been obtained. This means that the steady-state voltage V1 sensed at the coil **279** is also at a minimum because maximum coupling occurs. When maximum coupling is detected, e.g., when V1 is at a minimum, an audible or visual alarm may sound. In a preferred embodiment, a first audible tone is generated whenever alignment is not achieved. Thus, as a charging operation begins, the first audible tone sounds, and the user seeks to position the charger **208** (or at least to position the coil **279**) at a location that causes the first audible tone to cease. Similarly, a charge complete detection circuit **697** alerts the user through generation of a second audible tone (preferably an ON-OFF beeping sound) when the IPG battery **180** is fully charged. A fully charged condition is also sensed by monitoring the reflected impedance through the coil **279**. As indicated above, a fully charged condition is signaled from the IPG by switching the rectifier circuit **682** within the IPG from a full-wave rectifier circuit to a half-wave rectifier circuit. When such rectifier switching occurs, the voltage V1 suddenly increases (e.g., a transient or pulsed component appears in the voltage V1) because the amount of reflected energy suddenly increases. This sudden increase in V1 is detected by the charge complete detection circuit **697**, and once detected causes the second audible tone, or tone sequence, to be broadcast via the speaker **693** in order to signal the user that the implant battery **180** is fully charged.

[**0103**] Thus, it is seen that invention provides an implant device having a rechargeable internal battery as well as the control system used to monitor the battery's state of charge and circuitry to control the charging process. The system monitors the amount of energy used by the implant system and hence the state of charge of the battery. Through bidirectional telemetry (forward and back telemetry) with the hand held programmer **202** and/or the clinician programmer **204**, the system is able to inform the patient or clinician of the status of the system, including the state of charge, and further make requests to initiate an external charge process when needed. The acceptance of energy from the external charger is entirely under the control of the implanted system. Advantageously, both physical and software control exist to ensure reliable and safe use of the recharging system.

[**0104**] As indicated previously, conventional lithium-ion batteries are not susceptible to being discharged to zero volts without suffering irreversible damage. In contrast, the present invention uses a lithium-ion or lithium-ion polymer battery that has been modified to allow a zero volt discharge condition to occur without causing irreversible damage to the battery. Such modified lithium-ion battery has a cell structure as depicted in **FIG. 10A**. As seen in **FIG. 10**A, the battery cell includes an anode **736** and a cathode **732**. The anode is made from graphite that is placed on a titanium substrate **740**. The cathode is preferably made from $LiNiCoO_2$ (lithium-nickel-cobalt oxide) that coats an aluminum (Al) substrate **730**. An electrolyte and separator **734** separate the cathode from the anode.

[**0105**] The battery cell structure shown in **FIG. 10A** differs significantly from conventional Lithium-ion batteries. First, such a modified lithium-ion battery utilizes an anode (current-collector) electrode having a substrate that is made from titanium instead of copper. This allows the cell to drop to zero volts without causing irreversible damage. Second, the cathode electrode of the battery is made from $LiNiCoO_2$ instead of LiCoO2. Third, the separator used inside the battery is made from a ceramic instead of PE. Fourth, for a lithium-ion polymer battery, the electrolyte within the battery is preferably realized using a solid polymer conductor instead of LiPF6/EC+DEC, which is the electrolyte typically used in a lithium-ion battery. Additionally, the battery case may be coated with ferrite to further minimize eddy current heating. A "zero-volt technology" battery made in accordance with the present invention will always include at least the first modification mentioned above, i.e., an anode electrode having a substrate made from titanium (or a suitable titanium alloy), as opposed to copper, because this is the change needed to allow the battery cell voltage to drop to zero volts without causing irreversible damage to the battery cell.

[**0106**] When a modified lithium-ion battery as shown in **FIG. 10A** is discharged, it may discharge to zero volts without damage. When such a discharged-to-zero-volts battery is recharged, the voltage versus current relationship during the charging operation, assuming the charging circuit shown in **FIG. 7A** is employed, is substantially as shown in **FIG. 10B**. Of course, if the battery **180** has been discharged to zero volts, then no circuitry within the implant device may

operate because there is no operating power. However, as soon as an external charger **208** begins coupling energy into the implant device, this energy is rectified and provides a dc operating voltage that allows the charge control IC **684** and battery protection IC **686** to begin to function, directing the appropriate charge current to the discharged battery **180**. As seen in **FIG. 10**B, in a very short time, e.g., within about 10 seconds or so, the battery voltage will rise to about 0.3 V. From that initial starting point, the battery voltage gradually increases, almost in a linear manner, until it reaches about 1.5 volts after about being charged for about 2 minutes and 35 seconds. Thereafter, the battery continues to charge (not shown in **FIG.10B**), until the battery voltage reaches a full charge of about 4.1 volts after about 2 hours or so.

[**0107**] Thus, as described above, it is seen that through use of a rechargeable internal battery **180** within the IPG **100**, the SCS system and its control system are able to monitor the state of charge and control the charging process of the rechargeable battery **180**. Through bi-directional telemetry (forward and back telemetry) with the hand held programmer **202** and/or the clinician programmer **204**, the SCS system is able to inform the patient or clinician of the status of the system, including the state of charge, and further make requests to initiate an external charge process when needed. The acceptance of energy from the external charger is entirely under the control of the SCS implanted system. Advantageously, several layers of physical and software control exist to ensure reliable and safe use of the recharging system.

[**0108**] Also, as described above, it is seen that the invention provides a rechargeable system for use with a medical implant device or system that is characterized by the use or inclusion of: (1) lithium-ion or lithium-ion polymer batteries; (2) lithium-ion zero volt battery technology; (3) misalignment indication at the external location, responsive to changes in reflected impedance from the implant location; (4) a rechargeable recharger; (5) adhesive and/or Velcro®/adhesive charger attachment means; (6) over and under charge protection circuitry, including automatic shut-off circuitry; (7) back telemetry of implant battery charge level to external hand-held or clinician's programmer; (8) an end of charging modulating indicator within the implant device; (9) a battery status indicator on the external charger device; and (10) single or dual rate charging circuitry, i.e., fast charging at the safer lower battery voltages, and slower charging when the battery is nearer to full charge higher battery voltages.

[**0109**] While the invention herein disclosed has been described by means of specific embodiments and applications thereof, numerous modifications and variations could be made thereto by those skilled in the art without departing from the scope of the invention set forth in the claims.

What is claimed is:

1. An implantable device comprising:

electronic circuitry that performs a specified function;

an implantable rechargeable battery that provides operating power for the electronic circuitry; and

battery charging and protection circuitry that receives power from an external charger and controls the charging of the rechargeable battery to protect the rechargeable battery from overcharge and undercharge conditions;

wherein the implantable rechargeable battery comprises a lithium-ion or lithium-ion polymer battery having an anode electrode with a substrate made substantially from titanium, whereby the rechargeable battery may discharge to zero volts without damage; and

wherein the battery charging and protection circuitry applies a charging current to said rechargeable battery as a function of the rechargeable battery voltage.

2. The implantable device of claim 1 wherein the battery charging and protection circuitry applies a trickle charge current **I1** to the rechargeable battery when the battery voltage ranges from zero volts to a first voltage V1, applies a second charging current **I2** to the rechargeable battery when the battery voltage ranges from the first voltage V1 to a second voltage V2, and applies a third charging current **I3** to the rechargeable battery when the battery voltage ranges from the second voltage V2 to a fully-charged voltage V3.

3. The implantable device of claim 2 wherein the first voltage V1 comprises about 2.5 V, the second voltage V2 comprises about 4.0 V, and the fully-charged voltage V3 comprises about 4.1 V, and wherein the trickle charge current **I1** is less than or equal to the third charging current **I3**, and wherein the third charging current **I3** is less than the second charging current **I2**.

* * * * *