HANDBOOK of RADIO & WIRELESS TECHNOLOGY

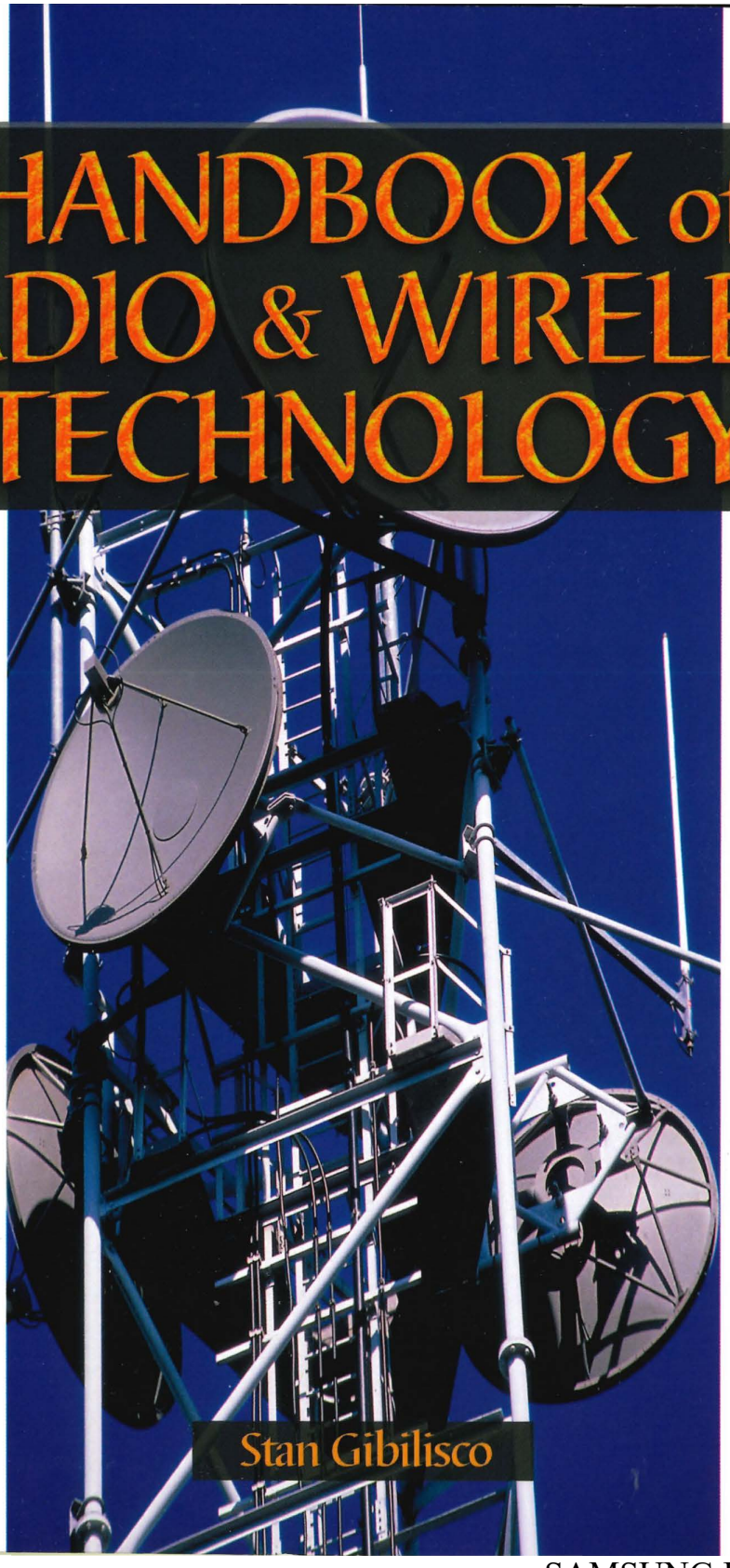

Stan Gibilisco

SAMSUNG EXHIBIT 1014

Library of Congress Cataloging-in-Publication Data

Gibilisco, Stan.
Handbook of radio and wireless technology / Stan Gibilisco.
p. cm.
Includes index.
ISBN 0-07-023024-2
1. Radio. 2. Wireless communication systems. I. Title.
TK6550.G515 1998
621.382—dc21 98-8471
CIP

McGraw-Hill
A Division of The McGraw-Hill Companies

Copyright © 1999 by The McGraw-Hill Companies, Inc. All rights reserved. Printed in the United States of America. Except as permitted under the United States Copyright Act of 1976, no part of this publication may be reproduced or distributed in any form or by any means, or stored in a data base or retrieval system, without the prior written permission of the publisher.

1 2 3 4 5 6 7 8 9 0 DOC/DOC 9 0 3 2 1 0 9 8

ISBN 0-07-023024-2

The sponsoring editor for this book was Scott Grillo, the editing supervisor was Stephen M. Smith, and the production supervisor was Pamela A. Pelton. It was set in Vendome ICG by Joanne Morbit and Michele Zito of McGraw-Hill's Hightstown, N.J., Professional Book Group composition unit.

McGraw-Hill books are available at special quantity discounts to use as premiums and sales promotions, or for use in corporate training programs. For more information, please write to the Director of Special Sales, McGraw-Hill, 11 West 19th Street, New York, NY 10011. Or contact your local bookstore.

This book is printed on recycled, acid-free paper containing a minimum of 50% recycled de-inked fiber.

Information contained in this work has been obtained by The McGraw-Hill Companies, Inc. ("McGraw-Hill") from sources believed to be reliable. However, neither McGraw-Hill nor its authors guarantee the accuracy or completeness of any information published herein and neither McGraw-Hill nor its authors shall be responsible for any errors, omissions, or damages arising out of use of this information. This work is published with the understanding that McGraw-Hill and its authors are supplying information, but are not attempting to render engineering or other professional services. If such services are required, the assistance of an appropriate professional should be sought.

will radiate. Parasitic arrays, such as the Yagi antenna and the quad antenna, operate on this principle.

Selective Filters

The term *selective filter* refers to circuits designed to tailor the way an electronic circuit or system responds to signals at various frequencies. There are many kinds of selective filters. Some are used at AF; others are used at RF.

Bandpass Filter

Any resonant circuit, or combination of resonant circuits, designed to discriminate against all frequencies except a specific frequency f_0, or a band of frequencies between two limiting frequencies f_0 and f_1, is called a *bandpass filter*. In a parallel LC circuit, a bandpass filter shows a high impedance at the desired frequency or frequencies, and a low impedance at unwanted frequencies. In a series LC configuration, the filter has a low impedance at the desired frequency or frequencies, and a high impedance at unwanted frequencies. Figure 2-9A shows a simple parallel-tuned LC bandpass filter; Fig. 2-9B shows a simple series-tuned LC bandpass filter.

Some bandpass filters are built with components other than actual coils and capacitors, but all such filters operate on the same principle. The *crystal filter* uses piezoelectric materials, usually quartz, to obtain a bandpass response. A *mechanical filter* uses vibration resonances of certain substances, usually ceramics. In optics, a simple color filter, discriminating against all light wavelengths except within a certain range, is a form of bandpass filter.

Bandpass filters are sometimes designed to have very sharp, defined, resonant frequencies. Sometimes the resonance is spread out over a fairly wide range. The *attenuation-versus-frequency characteristic* of a bandpass filter is called the *bandpass response*. A bandpass filter can have a single, well-defined resonant frequency f_0, as shown in Fig. 2-9C, or the response might be more or less rectangular, having two well-defined limit frequencies f_0 and f_1, as shown at D. The bandwidth might be only a few hertz, such as with an audio filter designed for reception of Morse code. Or the bandwidth might be several megahertz, as in a helical filter

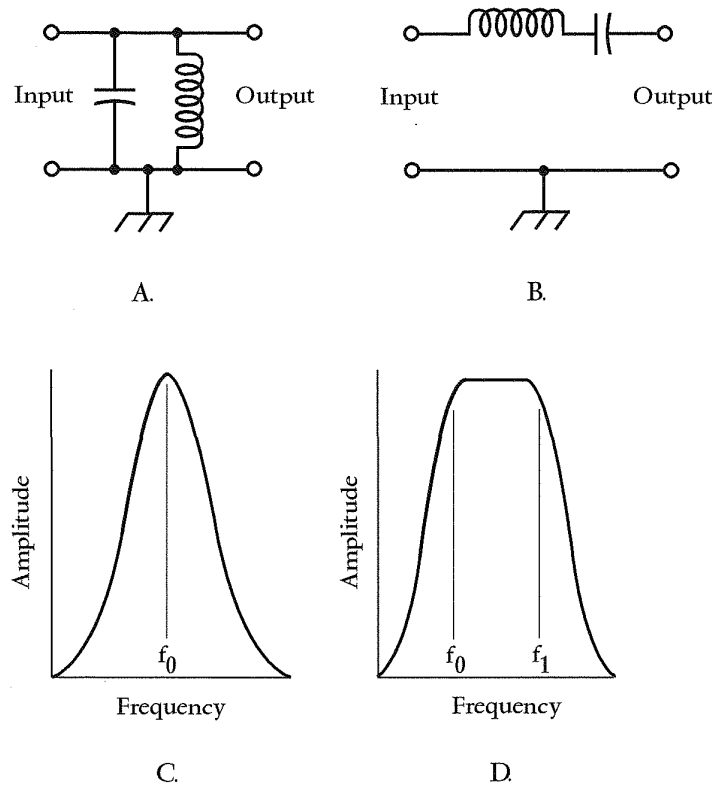

Figure 2-9
At A, elementary parallel-resonant bandpass filter. At B, elementary series-resonant bandpass filter. At C, sharp bandpass response. At D, broad bandpass response.

designed for the front end of a VHF or UHF radio receiver. A bandpass response is always characterized by high attenuation at all frequencies except within a particular range. The actual attenuation at desired frequencies is called the *insertion loss.*

Band-Rejection Filter

A *band-rejection filter,* also called a *band-stop filter,* is a resonant circuit designed to pass energy at all frequencies, except within a certain range. The attenuation is greatest at the resonant frequency f_0, or between two limiting frequencies f_0 and f_1. Figure 2-9E shows a simple parallel-resonant LC band-rejection filter; drawing F shows a simple series-resonant LC band-rejection filter. Note the similarity between band-rejection and bandpass filters. The fundamental difference is that

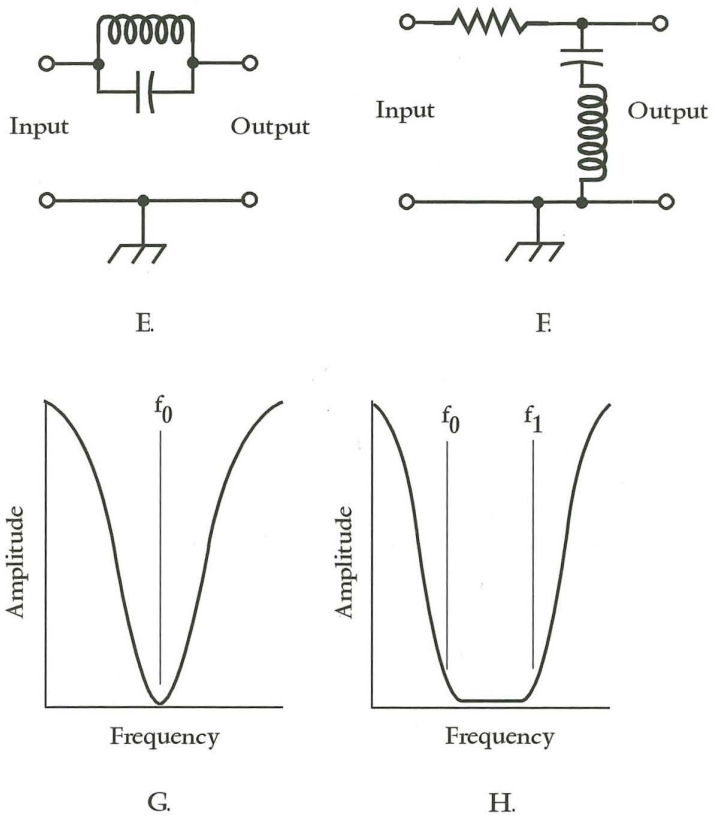

Figure 2-9 (cont.) At E, elementary parallel-resonant band-rejection filter. At F, elementary series-resonant band-rejection filter. At G, sharp band-rejection response. At H, broad band-rejection response.

the band-rejection filter consists of parallel LC circuits connected in series with the signal path, or series LC circuits in parallel with the signal path; in bandpass filters, series-resonant circuits are connected in series, and parallel-resonance circuits in parallel.

Band-rejection filters need not necessarily be made up of coils and capacitors, but they often are. Quartz crystals are sometimes used as band-rejection filters. Lengths of transmission line, either short-circuited or open, are useful as band-rejection filters at the higher radio frequencies. A common example of a band-rejection filter is a *parasitic suppressor,* used in high-power RF amplifiers.

All band-rejection filters show an attenuation-versus-frequency characteristic marked by low loss at all frequencies except within a prescribed range. Figure 2-9G and H shows two types of band-rejection response. A sharp response (at G) occurs at or near a single resonant frequency f_0. A

rectangular response is characterized by low attenuation below a limit f_0 and above a limit f_1, and high attenuation between these limiting frequencies.

Notch Filter

A *notch filter* is a narrowband-rejection filter. Notch filters are found in many radio communications receivers. The notch filter is extremely convenient for reducing interference caused by strong, unmodulated carriers within the passband of a receiver.

Notch-filter circuits are generally inserted in one of the intermediate-frequency (IF) stages of a superheterodyne receiver, where the bandpass frequency is constant. There are several different kinds of notch-filter circuit. One of the simplest is a trap configuration, inserted in series with the signal path (see Fig. 2-9E). The notch frequency is adjustable, so that the deep null can be tuned to any frequency within the receiver passband.

A properly designed notch filter can produce attenuation in excess of 40 decibels (dB) in the center of the notch. Some sophisticated types, especially AF designs, can provide 60 dB of attenuation at the notch frequency. Audio notch filters generally employ operational amplifiers with resistance-capacitance circuits. The frequency is adjusted by means of a potentiometer. In some AF notch filters, the notch width (sharpness) is adjustable.

High-Pass Filter

A *high-pass filter* is a combination of capacitance, inductance, and/or resistance, intended to produce large amounts of attenuation below a certain frequency and little or no attenuation above that frequency. The frequency at which the transition occurs is called the *cutoff frequency*. At the cutoff frequency, the power attenuation is 3 dB with respect to the minimum attenuation. Above the cutoff frequency, the power attenuation is less than 3 dB. Below the cutoff, the power attenuation is more than 3 dB.

The simplest high-pass filter consists of a parallel inductor or a series capacitor. Generally, high-pass filters have a combination of parallel inductors and series capacitors, such as the simple circuits shown in Fig. 2-9I and J. The filter at I is called an *L-section* high-pass filter;

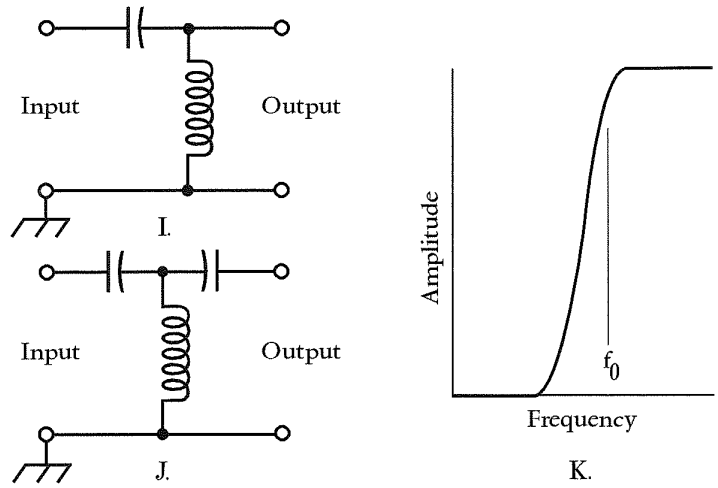

Figure 2-9 (cont.) At I, L-section high-pass filter. At J, T-section high-pass filter. At K, high-pass response.

that at J is called a *T-section* high-pass filter. These names are derived from the geometric shapes of the filters as they appear in schematic diagrams.

Resistors are sometimes substituted for the inductors in a high-pass filter. This is especially true if active devices are used, in which case many filter sections can be cascaded.

High-pass filters are used in a wide variety of situations in electronic apparatus. One common use for the high-pass filter is at the input of a television (TV) receiver. The cutoff frequency of such a filter is about 40 MHz. The installation of such a filter reduces the susceptibility of the TV receiver to EMI from sources at lower frequencies.

A *high-pass response* is an attenuation-versus-frequency curve that shows greater attenuation at lower frequencies than at higher frequencies. The sharpness of the response can vary considerably. Usually, a high-pass response is characterized by a high degree of attenuation up to a certain frequency, where the attenuation rapidly decreases. Finally the attenuation levels off at near zero insertion loss. The cutoff frequency of a high-pass response is that frequency at which the insertion power loss is 3 dB with respect to the minimum loss. The *ultimate attenuation* is the level of power attenuation well below the cutoff frequency, where the signal is virtually blocked. A good high-pass response is shown in Fig. 2-9K. The curve is smooth, and the insertion loss is essentially zero everywhere well above the cutoff frequency.

Low-Pass Filter

A low-pass filter is a combination of capacitance, inductance, and/or resistance, intended to produce large amounts of attenuation above a certain frequency and little or no attenuation below that frequency. The frequency at which the transition occurs is called the cutoff frequency. At the cutoff frequency, the power attenuation is 3 dB with respect to the minimum attenuation. Below the cutoff frequency, the power attenuation is less than 3 dB. Above the cutoff, the power attenuation is more than 3 dB.

The simplest low-pass filter consists of a series inductor or a parallel capacitor. More sophisticated low-pass filters have combinations of series inductors and parallel capacitors, such as the examples shown in Fig. 2-9L and M. The filter at L is an L-section low-pass filter; the circuit at M is a pi-section low-pass filter. As above, these names are derived from the geometric arrangement of the components as they appear in diagrams.

Resistors are sometimes substituted for the inductors in a low-pass filter. This is especially true when active devices are used, in which case many filter stages can be cascaded. This substitution reduces the physical bulk of the circuit, and it saves money.

Low-pass filters are used in many different applications in RF electronics. One common use of a low-pass filter is at the output of a high-frequency (HF) transmitter. The cutoff frequency is about 40 MHz. When such a low-pass filter is installed in the transmission line between a transmitter and antenna, VHF harmonics are greatly attenuated. This

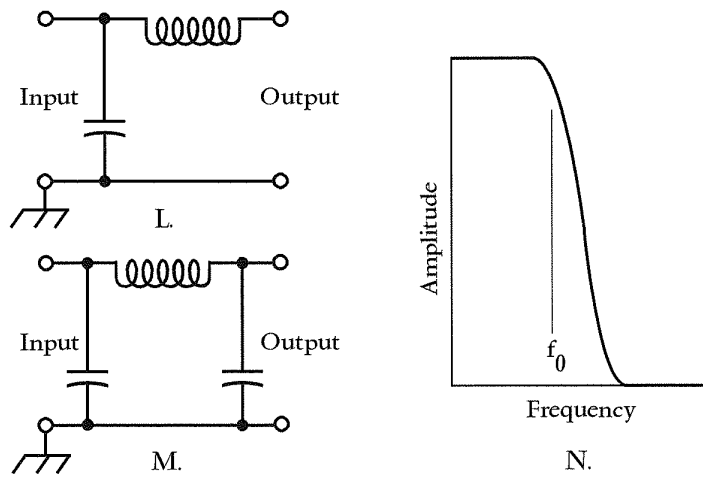

Figure 2-9 (cont.) At L, L-section low-pass filter. At M, pi-section low-pass filter. At N, low-pass response.

reduces the probability of EMI to TV receivers using outdoor antennas. In a narrowband transmitter, a low-pass filter might be built in for reduction of harmonic output.

A *low-pass response* is an attenuation-versus-frequency curve that shows greater attenuation at higher frequencies than at lower frequencies. The sharpness of the response can vary considerably. Usually, a low-pass response is characterized by a low degree of attenuation up to a certain frequency; above that point, the attenuation rapidly increases. Finally the attenuation levels off at a large value. Below the cutoff frequency, the attenuation is practically zero.

The *cutoff frequency* of a low-pass response is that frequency at which the insertion power loss is 3 dB with respect to the minimum loss. The *ultimate attenuation* is the level of attenuation well above the cutoff frequency, where the signal is virtually blocked. A good low-pass response looks like the attenuation-versus-frequency curve shown in Fig. 2-9N. The curve is smooth, and the insertion loss is essentially zero everywhere well below the cutoff frequency.

Diodes

The term *diode* means "two elements." Almost all diodes are made from silicon or other semiconducting materials.

Theory of Operation

When *P-type semiconductor* and *N-type semiconductor* materials are joined, a *P-N junction* is the result. Such a junction has properties that make semiconductor materials useful as electronic devices. A diode is formed by a single P-N junction. The N-type material comprises the *cathode*, and the P-type material forms the *anode*.

In a diode, electrons flow in the direction opposite the arrow in the schematic symbol. (Physicists consider current to flow from positive to negative, and this is in the same direction as the arrow points.) Current will not normally flow the other way unless the voltage is very high. If you connect a battery and a resistor in series with a P-N junction, current will flow if the negative terminal of the battery is connected to the N-type material (cathode) and the positive terminal is connected to the P-type material (anode). No current will flow if the battery is reversed.