US 20050134213A1

(19) United States

(12) Patent Application Publication

(10) Pub. No.: US 2005/0134213 A1

(43) Pub. Date: Jun. 23, 2005

Takagi et al.

(54) CONTACTLESS POWER TRANSMITTING DEVICE

(76) Inventors: **Tsutomu Takagi**, Shiojiri City (JP); **Koji Ishizawa**, Chino City (JP)

Correspondence Address:
HARNESS, DICKEY & PIERCE, P.L.C.
P.O. BOX 828
BLOOMFIELD HILLS, MI 48303 (US)

(21) Appl. No.: 10/980,987

(22) Filed: Nov. 4, 2004

(30) Foreign Application Priority Data

Nov. 5, 2003 (JP) 2003-375757

Publication Classification

(51) Int. Cl.[7] H02J 7/00

(52) U.S. Cl. 320/108; 363/78

(57) ABSTRACT

A contactless power transmitting device is provided including a power transmitting device functioning as a charger, a power transmitting-receiving sharing device functioning as a charger and including a secondary battery, and a power receiving device including a secondary battery. The power transmitting-receiving sharing device is used as a power supply for portable computers. The power receiving device is used as a power supply for cellular phones. The power transmitting device forms a contactless power transmitting device respectively by electromagnetically coupling to either the power transmitting-receiving sharing device or the power receiving device to charge the secondary battery or the secondary battery. The power transmitting-receiving sharing device forms the contactless power transmitting device by electromagnetically coupling to the power receiving device. In this case, the power transmitting-receiving sharing device charges the secondary battery included in the power receiving device.

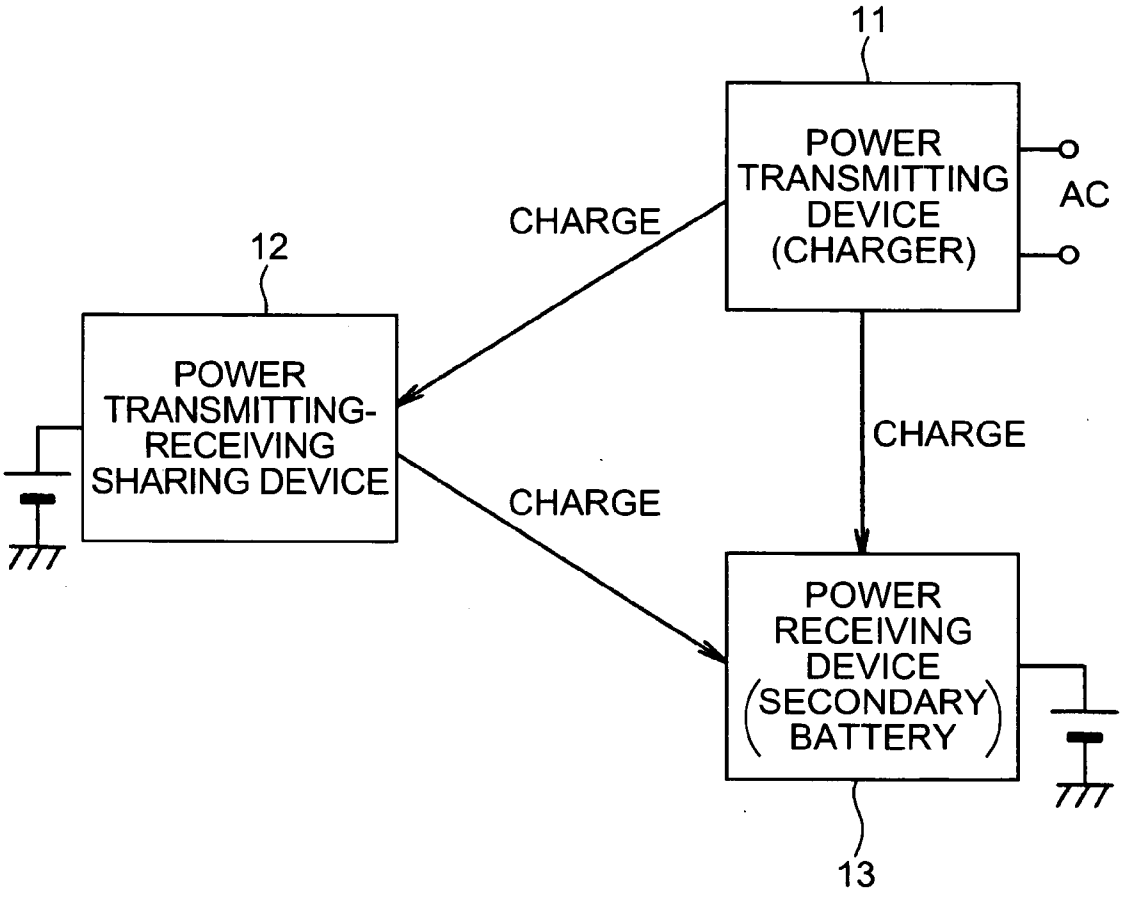

SAMSUNG EXHIBIT 1033

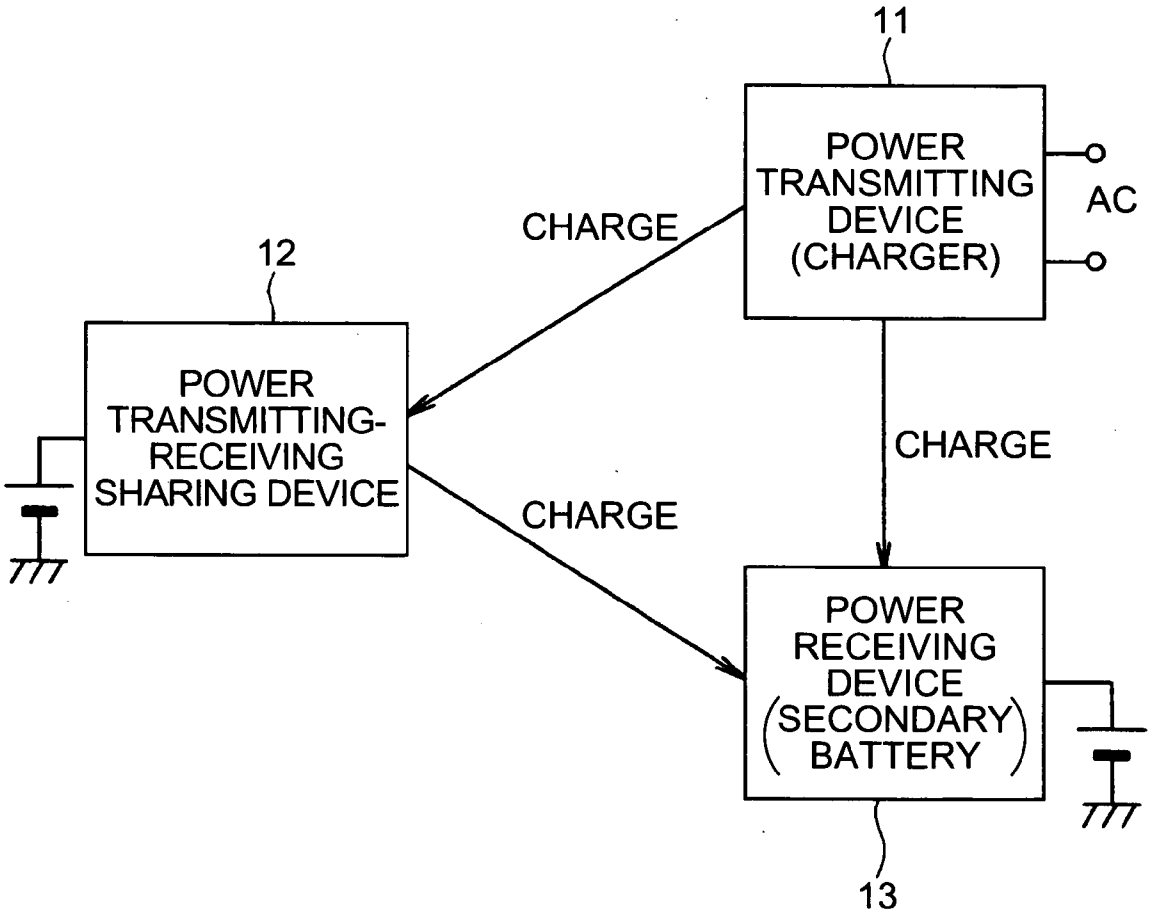
11
POWER TRANSMITTING DEVICE (CHARGER)
AC
CHARGE
12
POWER TRANSMITTING-RECEIVING SHARING DEVICE
CHARGE
CHARGE
POWER RECEIVING DEVICE (SECONDARY BATTERY)
13

FIG. 1

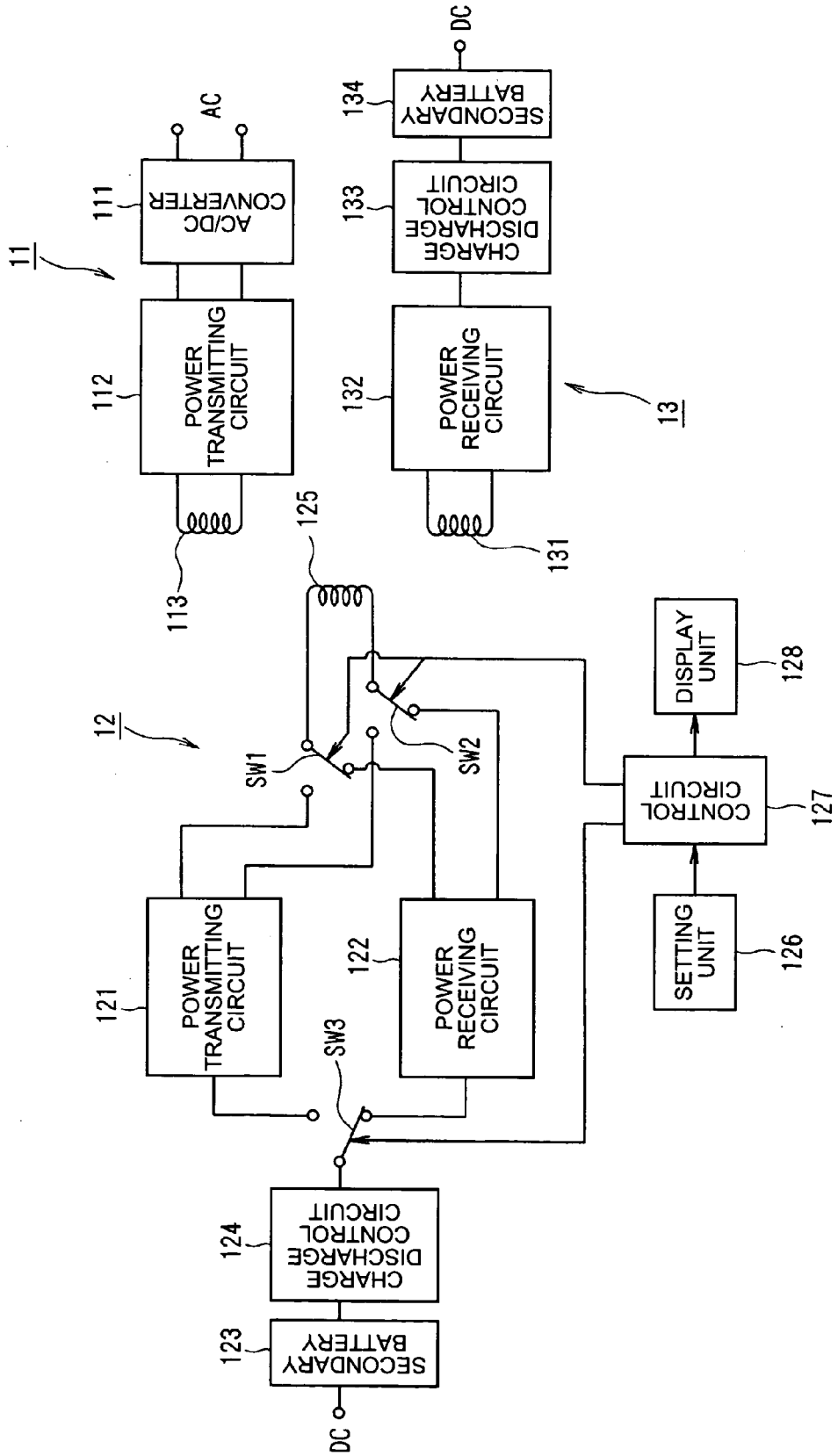
11
AC
AC/DC CONVERTER
111
POWER TRANSMITTING CIRCUIT
112
113
12
125
SW1
SW2
SW3
POWER TRANSMITTING CIRCUIT
121
POWER RECEIVING CIRCUIT
122
CHARGE DISCHARGE CONTROL CIRCUIT
124
SECONDARY BATTERY
123
DC
DC
SECONDARY BATTERY
134
CHARGE DISCHARGE CONTROL CIRCUIT
133
POWER RECEIVING CIRCUIT
132
131
13
DISPLAY UNIT
128
CONTROL CIRCUIT
127
SETTING UNIT
126

FIG. 2

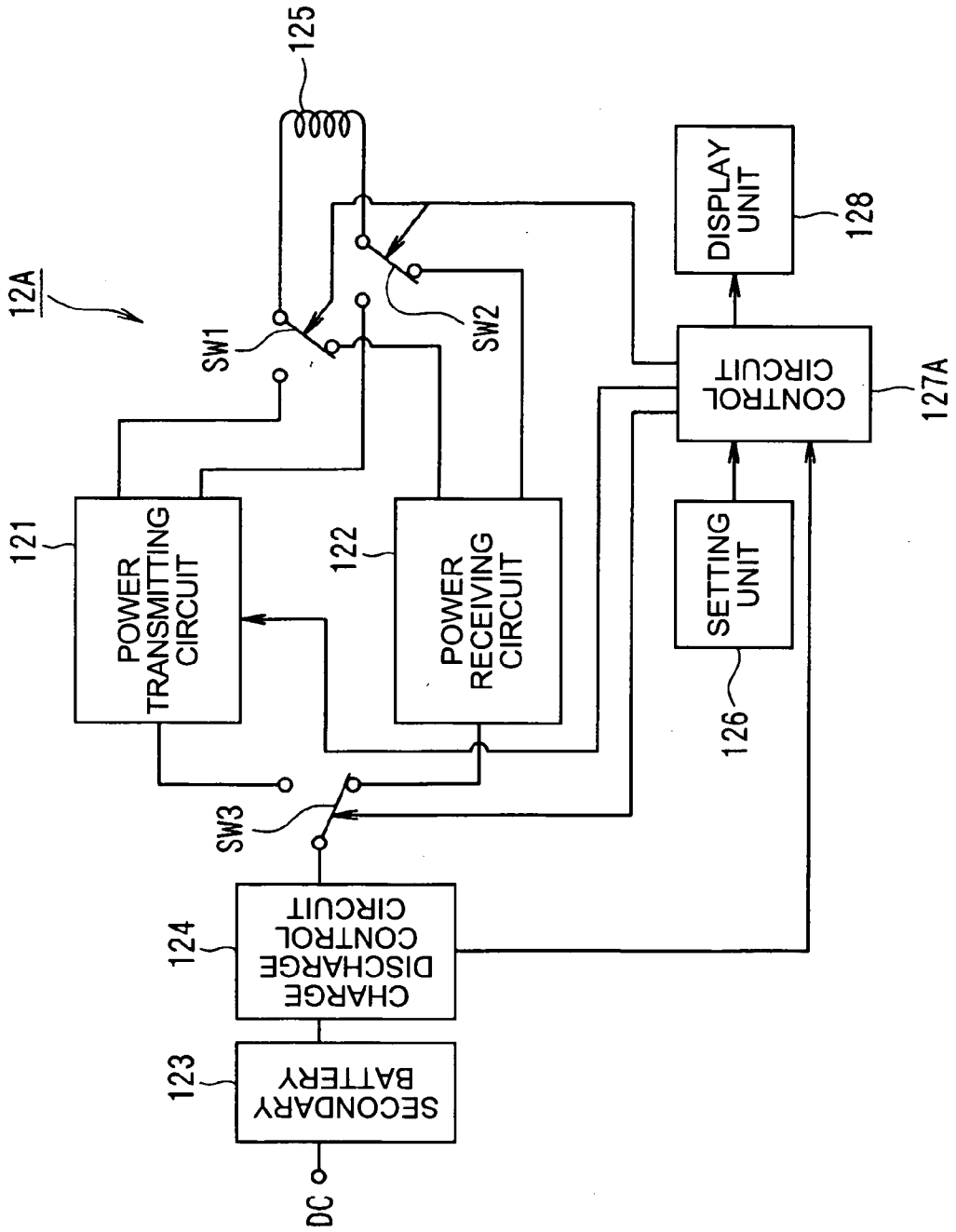
12A
125
SW1
SW2
121
POWER TRANSMITTING CIRCUIT
122
POWER RECEIVING CIRCUIT
SW3
124
CHARGE DISCHARGE CONTROL CIRCUIT
123
SECONDARY BATTERY
DC
DISPLAY UNIT
128
CONTROL CIRCUIT
127A
SETTING UNIT
126

FIG. 3

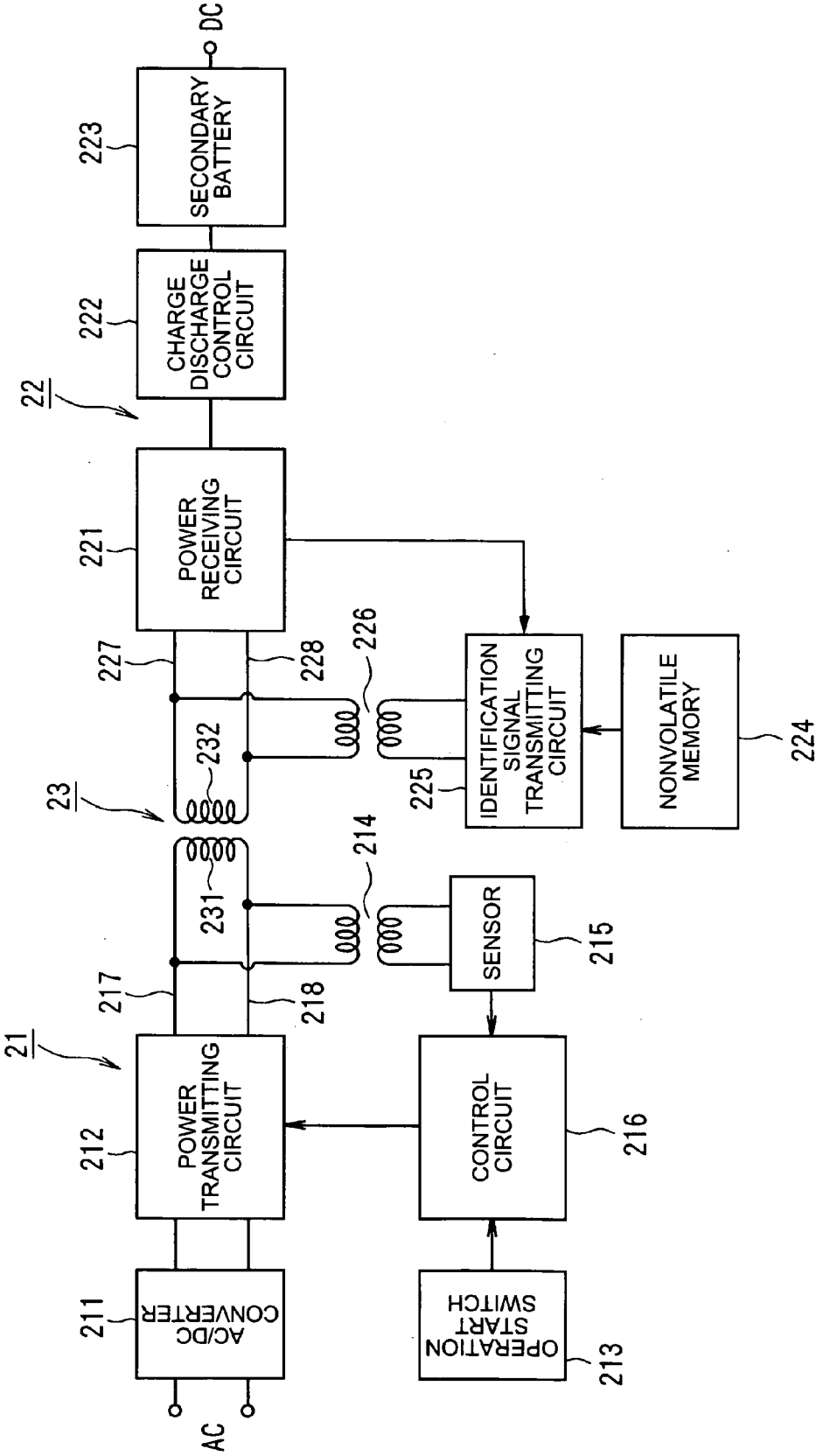
AC
AC/DC CONVERTER
211
POWER TRANSMITTING CIRCUIT
212
21
217
218
231
214
SENSOR
215
OPERATION START SWITCH
213
CONTROL CIRCUIT
216
23
232
227
228
226
225
IDENTIFICATION SIGNAL TRANSMITTING CIRCUIT
NONVOLATILE MEMORY
224
POWER RECEIVING CIRCUIT
221
22
CHARGE DISCHARGE CONTROL CIRCUIT
222
SECONDARY BATTERY
223
DC

FIG. 4

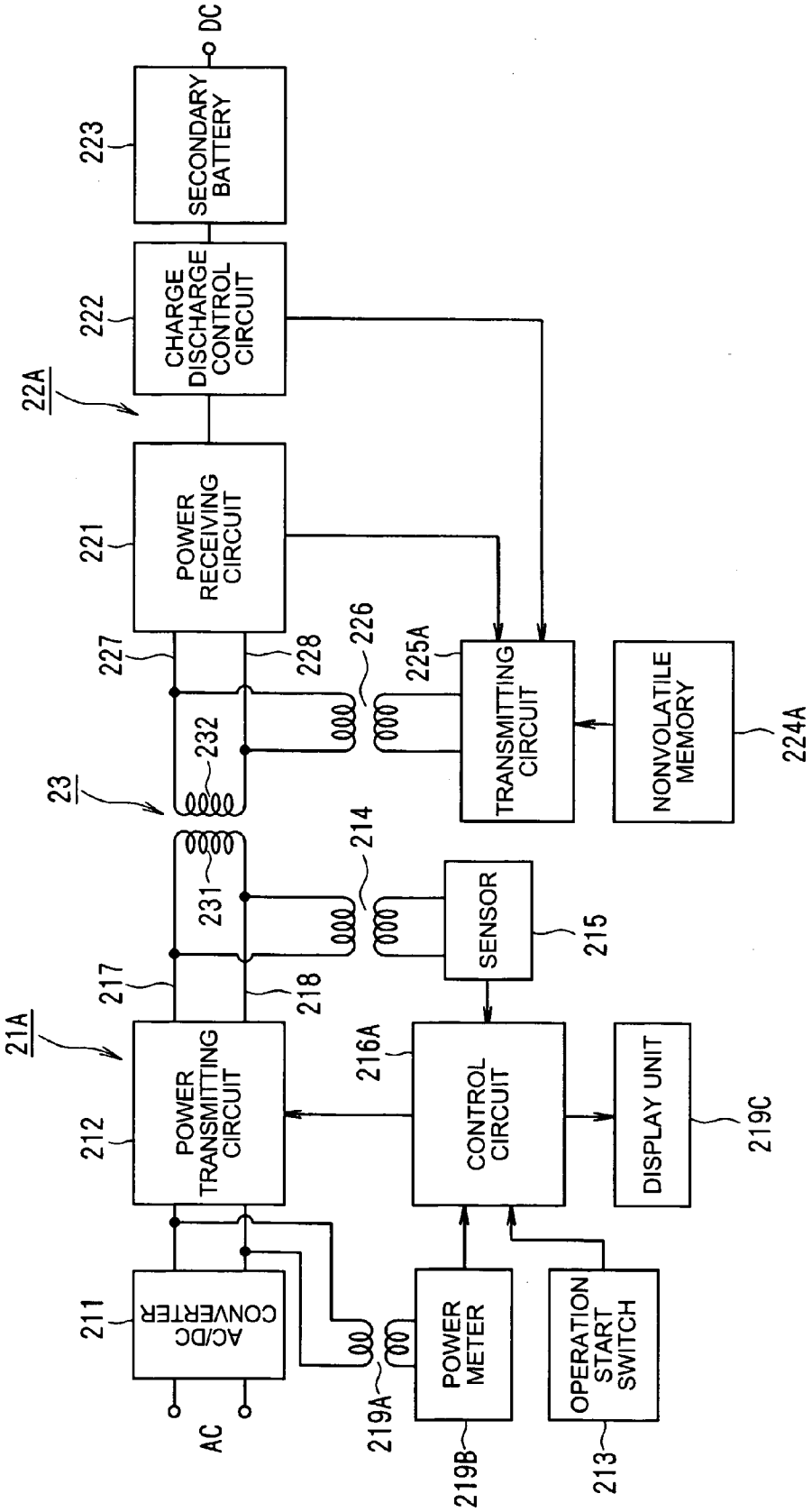
DC
SECONDARY BATTERY
223
CHARGE DISCHARGE CONTROL CIRCUIT
222
22A
POWER RECEIVING CIRCUIT
221
227
228
226
225A
TRANSMITTING CIRCUIT
NONVOLATILE MEMORY
224A
232
23
231
214
SENSOR
215
217
218
21A
POWER TRANSMITTING CIRCUIT
212
216A
CONTROL CIRCUIT
DISPLAY UNIT
219C
211
AC/DC CONVERTER
AC
219A
POWER METER
219B
OPERATION START SWITCH
213

FIG. 5

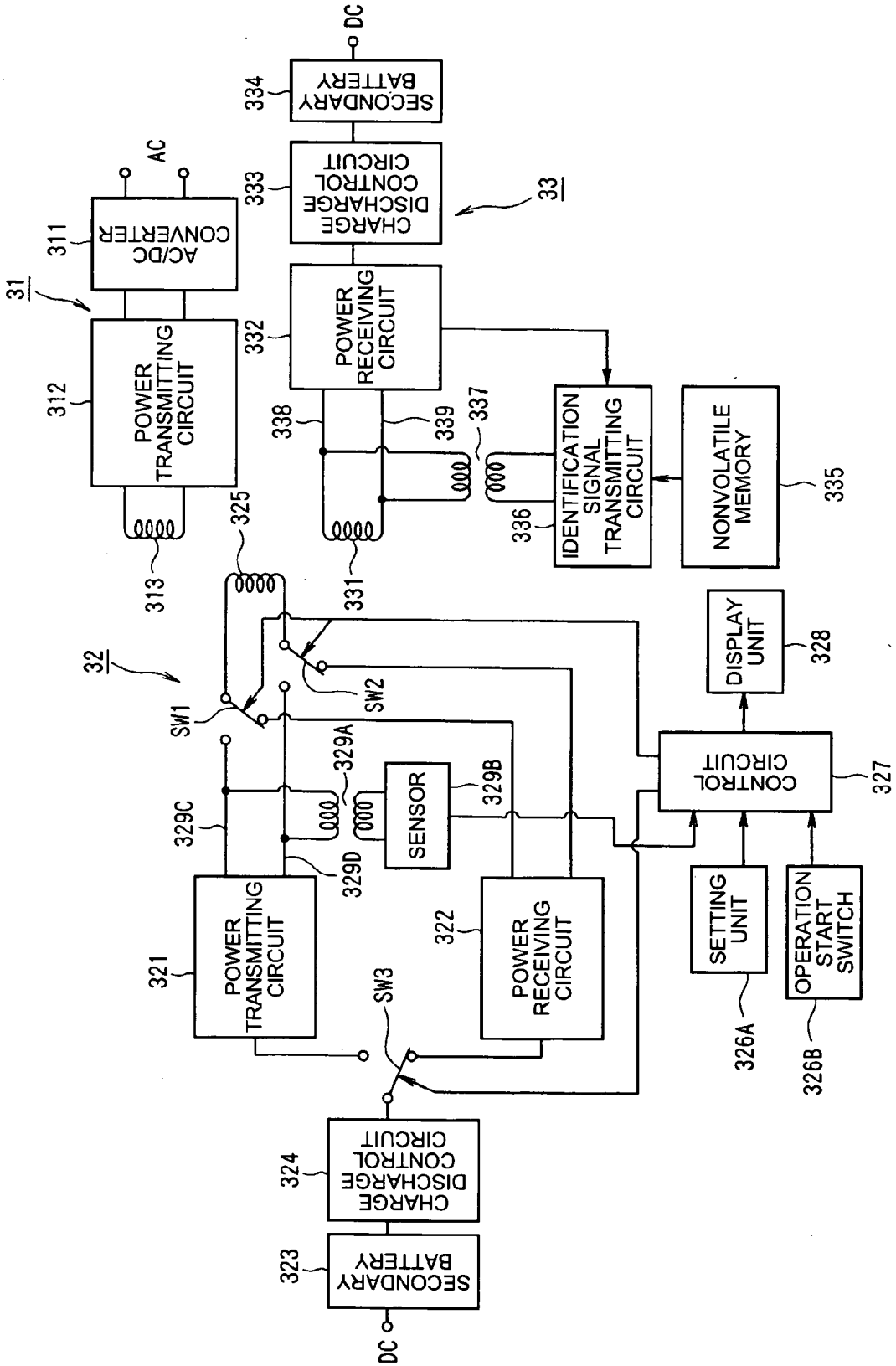
DC
SECONDARY BATTERY
334
CHARGE DISCHARGE CONTROL CIRCUIT
333
33
AC
AC/DC CONVERTER
311
31
POWER TRANSMITTING CIRCUIT
312
POWER RECEIVING CIRCUIT
332
338
339
337
IDENTIFICATION SIGNAL TRANSMITTING CIRCUIT
336
NONVOLATILE MEMORY
335
313
325
331
32
SW1
SW2
DISPLAY UNIT
328
329A
SENSOR
329B
CONTROL CIRCUIT
327
329C
329D
POWER TRANSMITTING CIRCUIT
321
POWER RECEIVING CIRCUIT
322
SW3
SETTING UNIT
OPERATION START SWITCH
326A
326B
CHARGE DISCHARGE CONTROL CIRCUIT
324
SECONDARY BATTERY
323
DC

FIG. 6

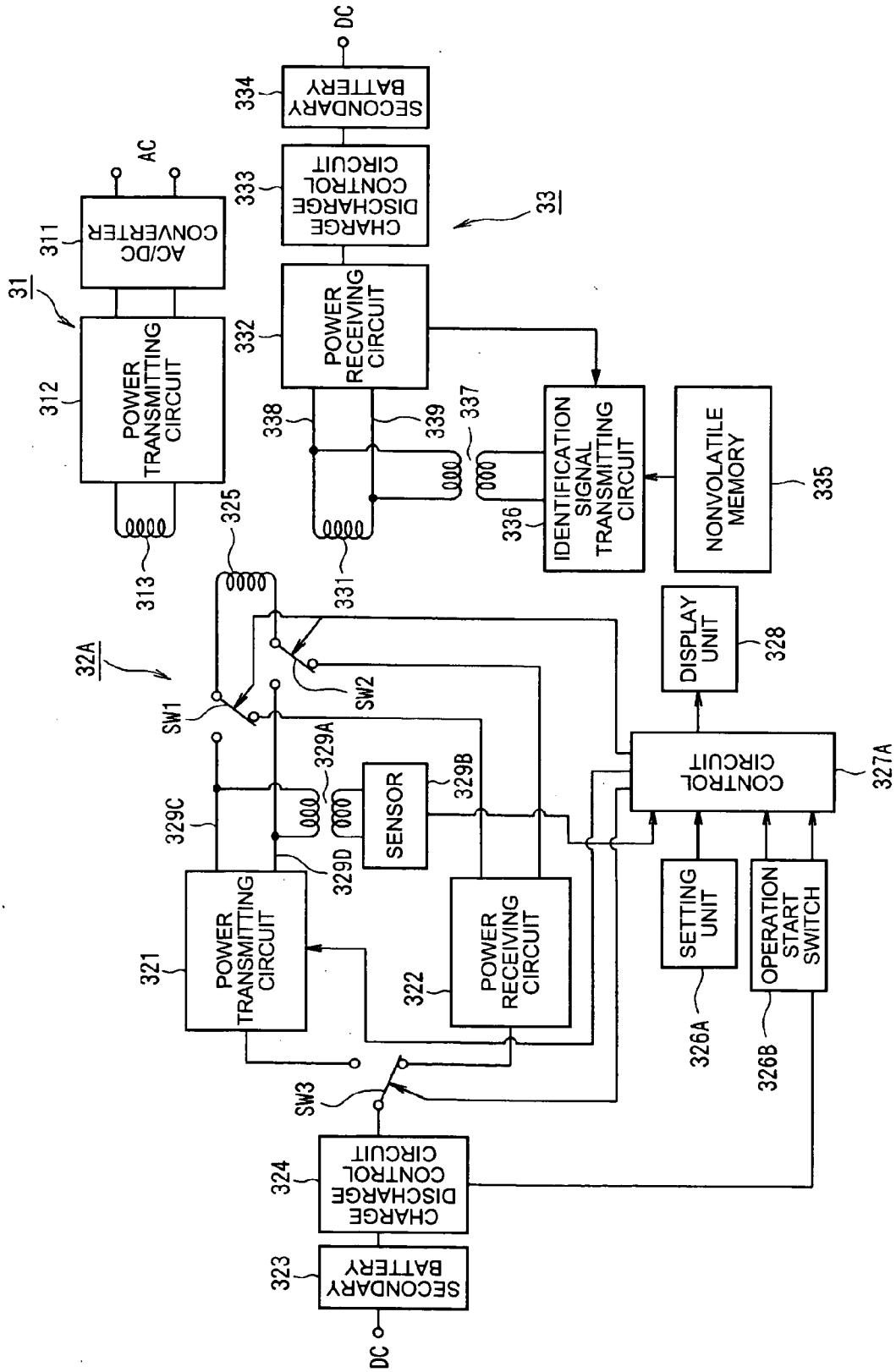
DC
SECONDARY BATTERY
334
CHARGE DISCHARGE CONTROL CIRCUIT
333
33
AC
AC/DC CONVERTER
311
31
POWER TRANSMITTING CIRCUIT
312
POWER RECEIVING CIRCUIT
332
338
339
337
IDENTIFICATION SIGNAL TRANSMITTING CIRCUIT
336
NONVOLATILE MEMORY
335
313
325
331
32A
SW1
SW2
DISPLAY UNIT
328
329A
329B
329C
329D
SENSOR
CONTROL CIRCUIT
327A
POWER TRANSMITTING CIRCUIT
321
POWER RECEIVING CIRCUIT
322
SETTING UNIT
OPERATION START SWITCH
326A
326B
SW3
CHARGE DISCHARGE CONTROL CIRCUIT
324
SECONDARY BATTERY
323
DC

FIG. 7

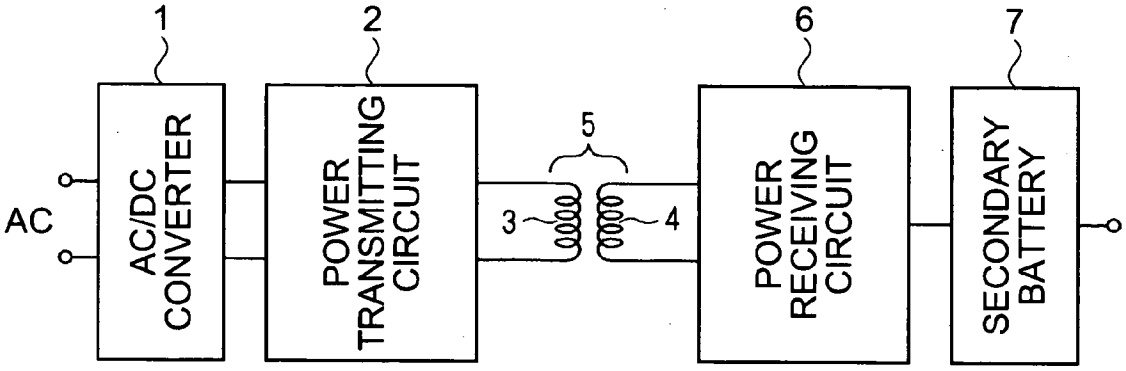
AC
1
AC/DC CONVERTER
2
POWER TRANSMITTING CIRCUIT
3
5
4
6
POWER RECEIVING CIRCUIT
7
SECONDARY BATTERY

FIG. 8

CONTACTLESS POWER TRANSMITTING DEVICE

RELATED APPLICATIONS

[0001] This application claims priority to Japanese Patent Application No. 2003-375757 filed Nov. 5, 2003 which is hereby expressly incorporated by reference herein in its entirety.

BACKGROUND

[0002] 1. Field of the Invention

[0003] The present invention relates to a contactless power transmitting device that includes a power transmitting circuit and a power receiving circuit which are both electromagnetically coupled by a transformer and can charge a secondary battery by utilizing an output electric power of the power receiving circuit

[0004] 2. Related Art

[0005] As shown in **FIG. 8**, a device including an alternating current/direct current (AC/DC) converter **1**, a power transmitting circuit **2**, a transformer **5** having a primary coil **3** and a secondary coil **4**, a power receiving circuit **6** and a secondary battery **7** is known as a kind of contactless power transmitting device. Further, the primary coil **3** and the second coil **4** that are included in the transformer **5** are used by approaching each other so as to be electromagnetically coupled when the secondary battery **7** is charged. After use, they can easily and physically be separated. (For example, refer to Japanese Unexamined Patent Publication Nos. 10-23677 and 2002-272020).

[0006] In the contactless power transmitting device configured in this way, the AC/DC converter **1** converts an alternating voltage to a direct current voltage. The power transmitting circuit **2** produces the alternating voltage having a predetermined frequency by utilizing the direct current voltage from the AC/DC converter **1** so as to supply the produced alternating voltage to the primary coil **3**. An alternating current is induced by the alternating voltage supplied to the primary coil **3** in the secondary coil **4**, the alternating current induced in the secondary coil **4** is supplied to the power receiving circuit **6**. The power receiving circuit **6** rectifies the alternating current induced in the secondary coil **4** to the direct current voltage so as to be output. The secondary battery **7** is charged by the direct current voltage.

[0007] As above-mentioned, in the conventional contactless power transmitting device shown in **FIG. 8**, the primary coil **3** and the second coil **4** included in the transformer **5** are used by approaching each other when the secondary battery **7** is charged. After charging is complete, both can be easily physically separated. Therefore, it is convenient to use the conventional contactless power transmitting device as a power supply (secondary battery) for cellular phones and portable personal computers.

[0008] Meanwhile, cellular phones are remarkably spreading in popularity. Unfortunately, a cellular phone cannot be used after it runs out of power (loses the charge in its power supply). This often occurs when a user is away from his or her office. The conventional contactless power transmitting device cannot cope easily and promptly with this situation.

[0009] In addition to cellular phones, portable computers are also remarkably spreading in popularity. The number of businessmen and the like carrying both when they are away from their office is increasing. Notably, cellular phones have a smaller power supply capacity than that of portable computers.

[0010] Thus, when the power supply charge for the cellular phone is exhausted, it would be extremely convenient to charge the power supply of the cellular phone by utilizing the power supply for a portable computer, which could easily and promptly cope with the situation.

[0011] It should also be noted that in the conventional contactless power transmitting device, the secondary battery **7** is charged by bringing the primary coil **3** and the secondary coil **4** in the transformer **5** toward each other as above mentioned. Thus, the device offers convenience for use as a power supply for cellular phones, portable computers, or the like.

[0012] However, in the case in which the power transmitting circuit **2** starts operation in conditions where the coils **3** and **4** are next to each other, if the power transmitting circuit **2** and the power receiving circuit **6** are mismatched in specifications or the like, proper operation is not performed between the power transmitting circuit **2** and the power receiving circuit **6**, thereby causing defects and the like. This is not preferable from a safety point of view.

[0013] Taking the aforesaid situation into account, if a power supply for cellular phones or the like runs out when a user is away from his or her office and the power supply is charged without contact, the present invention firstly aims to provide a contactless power transmitting device that can easily and promptly be charged at the place where the user is located.

[0014] In addition, taking the aforesaid situation into account, if a power supply for cellular phones, portable computers or the like runs out and the power supply is charged without contact, the present invention secondly aims to provide a contactless power transmitting device that can achieve an improvement in safety and fraud prevention in the charging operation.

[0015] Further, if a power supply for cellular phones or the like runs out when a user is away from his or her office and the power supply is charged without contact, the present invention thirdly aims to provide a contactless power transmitting device that can perform the charging easily and promptly, and achieve an improvement in safety and fraud prevention in the charging operation at the place where the user is located.

SUMMARY

[0016] In order to achieve the first aim of the present invention by solving the above problems, aspects of the invention are configured as below.

[0017] A first aspect of the invention includes a power transmitting device including a first coil, a power transmitting-receiving sharing device including a second coil and a first secondary battery, and a power receiving device including a third coil and a second secondary battery. The power transmitting device includes a power transmitting means producing an alternating current supplied to the first coil if

the first coil is electromagnetically coupled to the second coil or the third coil. The power transmitting-receiving sharing device includes a power transmitting means producing an alternating current supplied to the second coil using the first secondary battery as a power supply if the second coil is electromagnetically coupled to the third coil, and a power receiving means converting an alternating current induced in the second coil to a direct current if the second coil is electromagnetically coupled to the first coil so as to charge the first secondary battery with the converted direct current. The power receiving device includes a power receiving means converting an alternating current induced in the third coil to a direct current if the third coil is electromagnetically coupled to the first coil or the second coil so as to charge the second secondary battery with the converted direct current.

[0018] A second aspect of the invention includes a power transmitting device including a first coil, a power transmitting-receiving sharing device including a second coil and a first secondary battery, and a power receiving device including a third coil and a second secondary battery. The first coil, the second coil, and the third coil are configured so as to be electromagnetically coupled to each other and to be separable from each other. The power transmitting device includes a power transmitting means producing an alternating current supplied to the first coil. The power transmitting-receiving sharing device includes a power transmitting means producing an alternating current supplied to the second coil, a power receiving means converting an alternating current induced in the second coil to a direct current, a first coupling means selectively coupling the second coil to the power transmitting means or the power receiving means, a second coupling means selectively coupling the first secondary battery to the power transmitting means or the power receiving means, and a control means controlling the coupling of the first coupling means and the second coupling means respectively based on selection data. The power receiving device includes a power receiving means converting an alternating current induced in the third coil to a direct current so as to charge the second secondary battery with the converted direct current.

[0019] In the second aspect of the invention, the power transmitting-receiving sharing device further includes a setting means selectively setting the use of the power transmitting means or the power receiving means to the control means, and a display means displaying the setting condition of the setting means. The control means controls the coupling of the first coupling means and the second coupling means based on the setting of the setting means.

[0020] In the contactless power transmitting device, the power transmitting-receiving sharing device further includes a remaining charge measuring means measuring a remaining charge of the first secondary battery if the first secondary battery is used as a power supply for the power transmitting means. The control means stops the operation of the power transmitting means if the value of the measured remaining charge of the remaining charge measuring means is equal to or less than a predetermined value.

[0021] According to the above mentioned aspects of the invention, in the case in which a power supply for cellular phones or the like runs out when a user is away from his or her office and the power supply is charged without contact, the charging operation can easily and promptly be performed at the place where the user is located.

[0022] In order to achieve the second aim of the present invention, aspects of the invention are configured as below.

[0023] In a contactless power transmitting device that includes a power transmitting device, a power receiving device, a transformer including a first coil coupled to the power transmitting device and a second coil coupled to the power receiving device, the first coil and the second coil being configured so as to be electromagnetically coupled to each other and to be separable from each other of a third aspect of the invention, the power transmitting device and the power receiving device are configured as follows. The power transmitting device includes a power transmitting means producing an alternating current supplied to the first coil, a receiving means receiving an identification signal to identify the power receiving device, the identification signal transmitted in a power line coupled to the first coil, and a control means controlling the power transmitting of the power transmitting means if the power transmitting means starts transmitting power. The power receiving device includes a power receiving means converting an alternating current induced in the second coil to a direct current, and a transmitting means producing the identification signal transmitted in a power line coupled to the second coil so as to supply the produced identification signal to the power line. In addition, the control means controls the power transmitting means to perform a pre-power transmission for a predetermined time before starting to transmit power by electromagnetically coupling the first coil and the second coil. The control means determines whether or not the identification signal received by the receiving means coincides with an identification signal for reference during the pre-power transmission. If both coincide, the control means controls the power transmitting means to start transmitting power, if both fail to coincide, the control means controls the power transmitting means to not start transmitting power.

[0024] In a contactless power transmitting device that includes a power transmitting device, a power receiving device, a transformer including a first coil coupled to the power transmitting device and a second coil coupled to the power receiving device, the first coil and the second coil being configured so as to be electromagnetically coupled to each other and to be separable from each other of a fourth aspect of the invention, the power transmitting device and the power receiving device are configured as follows. The power transmitting device includes a power transmitting means producing an alternating current supplied to the first coil, a power meter measuring power transmitted by the power transmitting means, a receiving means receiving an identification signal to identify the power receiving device and an operation completion signal to show completion of the charging operation of a power receiving means, the identification signal and the operation completion signal transmitted in a power line coupled to the first coil, and a control means controlling the power transmitting of the power transmitting means according to a reception of the receiving means. The power receiving device includes a power receiving means converting an alternating current induced in the second coil to a direct current, and a transmitting means respectively producing the identification signal and the operation completion signal that are transmitted in the power line coupled to the second coil so as to supply

the produced identification signal and the operation completion signal to the power line respectively. In addition, the control means controls the power transmitting means to perform a pre-power transmission for a predetermined time before starting to transmit power by electromagnetically coupling the first coil and the second coil. The control means determines whether or not the identification signal received by the receiving means coincides with an identification signal for reference during the pre-power transmission. If both coincide, the control means controls the power transmitting means to start transmitting power. At the same time, the control means starts to load a measured value of the power meter. If both fail to coincide, the control means controls the power transmitting means to not start transmitting power. The control means calculates a fee for charging based on the measured value if the receiving means receives the operation completion signal after starting the power transmitting by the power transmitting means.

[**0025**] The contactless power transmitting device of the fourth aspect of the invention further includes a display means displaying the fee for charging calculated by the control means.

[**0026**] According to the above-mentioned aspects of the invention, in the case in which a power supply for cellular phones or portable personal computers runs out and the power supply is charged without contact, an improvement in safety or fraud prevention in the charging operation can be achieved.

[**0027**] In order to achieve the third aim of the present invention, aspects of the invention are configured as below.

[**0028**] A fourth aspect of the invention includes a power transmitting device including a first coil, a power transmitting-receiving sharing device including a second coil and a first secondary battery, and a power receiving device including a third coil and a second secondary battery. The first coil, the second coil, and the third coil are configured so as to be electromagnetically coupled to each other and to be separable from each other. The power transmitting device includes a power transmitting means producing an alternating current supplied to the first coil. The power receiving device includes a power receiving means converting an alternating current induced in the third coil to a direct current so as to charge the second secondary battery with the converted direct current, and a transmitting means producing an identification signal to identify the power receiving device if the power receiving means starts receiving power, the identification signal being transmitted in a power line coupled to the third coil, and supplying the produced identification signal to the power line. The power transmitting-receiving sharing device includes a power transmitting means producing an alternating current supplied to the second coil, a power receiving means converting an alternating current induced in the second coil to a direct current, a receiving means receiving the identification signal from the transmitting means, the identification signal being transmitted in the power line coupled to the second coil, a first coupling means selectively coupling the second coil to the power transmitting means or the power receiving means, a second coupling means selectively coupling the first secondary battery to the power transmitting means or the power receiving means, and the control means. The control means performs in the following way. The control means controls the power transmitting means and the second coil so as to be coupled by the first coupling means, and, simultaneously, the first secondary battery and the power transmitting means so as to be coupled by the second coupling means. The control means controls the power transmitting means to perform a pre-power transmission for a predetermined time before starting to transmit power by electromagnetically coupling the second coil and the third coil. The control means determines whether or not the identification signal received by the receiving means coincides with an identification signal for reference during the pre-power transmission. If both coincide, the control means controls the power transmitting means to start transmitting power, if both fail to coincide, the control means controls the power transmitting means to not start transmitting power.

[**0029**] In the contactless power transmitting device, the power transmitting-receiving sharing device further includes a remaining charge measuring means measuring a remaining charge of the first secondary battery if the first secondary battery is used as a power supply for the power transmitting means. The control means stops the operation of the power transmitting means if the value of the measured remaining charge of the remaining charge measuring means is equal to or less than a predetermined value.

[**0030**] According to the above-mentioned aspects of the invention, in the case in which a power supply for a cellular phone or portable personal computer runs out when a user is away from his or her office and the power supply is charged without contact, the charging operation can easily and promptly be performed at the place where the user is located, and an improvement in safety or fraud prevention in the charging operation can be achieved.

BRIEF DESCRIPTION OF THE DRAWINGS

[**0031**] **FIG. 1** is a diagram to explain a concept of the configuration of a first embodiment of the present invention.

[**0032**] **FIG. 2** is a block diagram illustrating the configuration of the first embodiment.

[**0033**] **FIG. 3** is a block diagram illustrating another example of a power transmitting-receiving sharing device of the first embodiment.

[**0034**] **FIG. 4** is a block diagram illustrating the configuration of a second embodiment of the invention.

[**0035**] **FIG. 5** is a block diagram illustrating the configuration of a third embodiment of the invention.

[**0036**] **FIG. 6** is a block diagram illustrating the configuration of a fourth embodiment of the invention.

[**0037**] **FIG. 7** is a block diagram illustrating the configuration of a fifth embodiment of the invention.

[**0038**] **FIG. 8** is a block diagram illustrating an example of a conventional device.

DETAILED DESCRIPTION

[**0039**] Embodiments according to the present invention will be explained below with reference to the drawings.

[**0040**] A configuration of a contactless power transmitting device of a first embodiment of the present invention will be explained with reference to **FIGS. 1 and 2**.

[0041] As shown in **FIG. 1**, the contactless power transmitting device of the first embodiment includes a power transmitting device **11** functioning as a charger, a power transmitting-receiving sharing device **12** functioning as a charger and including a secondary battery, and a power receiving device **13** including a secondary battery.

[0042] The power transmitting device **11** is electromagnetically coupled to the power transmitting-receiving sharing device **12** or the power receiving device **13** so as to form the contactless power transmitting device respectively. If the power transmitting device **11** is coupled to the power transmitting-receiving sharing device **12**, the power transmitting device **11** charges the secondary battery included in the power transmitting-receiving sharing device **12**. If the power transmitting device **11** is coupled to the power receiving device **13**, the power transmitting device **11** charges the secondary battery included in the power receiving device **13**. In addition, the power transmitting-receiving sharing device **12** forms the contactless power transmitting device by electromagnetically coupling to the power receiving device **13**. In this case, the power transmitting-receiving sharing device **12** charges the secondary battery included in the power receiving device **13**.

[0043] Here, the power transmitting-receiving sharing device **12** is used, for example, as a power supply for portable terminals such as portable computers or the like. The power receiving device **13** is used, for example, as a power supply for cellular phones.

[0044] Next, a specific configuration of each part of the first embodiment will be explained with reference to **FIG. 2**.

[0045] As shown in **FIG. 2**, the power transmitting device **11** includes an AC/DC converter **111**, a power transmitting circuit **112**, and a coil **113**.

[0046] The AC/DC converter **111**, which, for example, converts the alternating voltage of, for example, 100 or 110 volts, supplied to homes to a predetermined direct current voltage, supplies the converted direct current voltage to the power transmitting circuit **112**. The power transmitting circuit **112**, which produces an alternating voltage having a predetermined frequency by using the direct current voltage from the AC/DC converter **111**, supplies the produced alternating voltage to the coil **113**.

[0047] As shown in **FIG. 2**, the power transmitting-receiving sharing device **12** includes a power transmitting circuit **121**, a power receiving circuit **122**, a secondary battery **123**, a charge discharge control circuit **124**, a coil **125**, switches SW1 to SW3, a setting unit **126**, a control circuit **127** and a display unit **128**.

[0048] The power transmitting circuit **121** produces an alternating voltage having a predetermined frequency by using the direct current voltage supplied from the secondary battery **123** in operation, supplying the produced alternating voltage to the coil **125**. If power is transmitted from the power transmitting device **11** to the power receiving circuit **122** by electromagnetically coupling between the coil **125** and the coil **113** in the power transmitting device **11**, the power receiving circuit **122** rectifies an alternating voltage induced in the coil **125** to a direct current voltage. That is, the power receiving circuit **122** is an alternating current-direct current (AC-DC) converting circuit. The direct current voltage produced in the power receiving circuit **12** is supplied to the secondary battery **123** through the charge discharge control circuit **124** so as to charge the secondary battery **123**.

[0049] The secondary battery **123** can be repeatedly used by charging after being discharged, for example, such as a lithium-ion battery.

[0050] If the secondary battery **123** is charged by the power receiving circuit **122**, the charge discharge control circuit **124** controls (monitors) the charging operation. If the power transmitting circuit **121** or loads (not shown) are operated by the secondary battery **123**, the charge discharge control circuit **124** controls (monitors) the discharge.

[0051] If the coil **125** is used by approaching the coil **113** in the power transmitting device **11**, the coil **125** and the coil **113** are electromagnetically coupled so as to form a transformer therebetween. If the coil **125** is used by approaching the coil **131** in the power receiving device **13**, the coil **125** and the coil **131** are electromagnetically coupled so as to form a transformer therebetween. That is, the coils **113**, **125**, and **131** can be electromagnetically interconnected and also mutually be separated.

[0052] The switches SW1 and SW2 selectively couple the coil **125** to either the power transmitting circuit **121** or the power receiving circuit **122**. Also, the switch SW3 selectively couples the secondary battery **123** to either the power transmitting circuit **121** or the power receiving circuit **122**. Each contact of the switches SW1 to SW3 is normally, for example, coupled to the power receiving circuit **122** side as shown in **FIG. 2**.

[0053] The setting unit **126**, in which a user selectively sets the use of the power transmitting circuit **121** or the power receiving circuit **122**, inputs the set data to the control circuit **127**. The control circuit **127** displays the operating conditions on the display unit **128** according to the set data from the setting unit **126**, and controls the contact switching of the switches SW1 to SW3. The display unit **128**, which is configured with a liquid crystal display unit or the like, displays predetermined information as described above.

[0054] As shown in **FIG. 2**, the power receiving device **13** includes a coil **131**, a power receiving circuit **132**, a charge discharge control circuit **133**, and a secondary battery **134**.

[0055] If the coil **131** is used by approaching the coil **113** in the power transmitting device **11**, the coil **131** and the coil **113** are electromagnetically coupled so as to form a transformer therebetween. Also, if the coil **131** is used by approaching the coil **125** in the power transmitting-receiving sharing device **12**, the coil **131** and the coil **125** are electromagnetically coupled so as to form a transformer therebetween. The alternating voltage induced in the coil **131** by electromagnetic coupling is supplied to the power receiving circuit **132**.

[0056] The power receiving circuit **132** rectifies the alternating voltage induced in the coil **131** to a direct current voltage so as to be output. The direct current voltage output from the power receiving circuit **132** is supplied to the secondary battery **134** through the charge discharge control circuit **133** so as to charge the secondary battery **134**. If the secondary battery **134** is charged by the output from the power receiving circuit **132**, the charge discharge control circuit **133** controls the charging operation. If loads (not

shown) are operated by the secondary battery **134**, the charge discharge control circuit **133** controls the discharge.

[**0057**] Next, an operation example of the first embodiment will be explained with reference to **FIGS. 1 and 2**.

[**0058**] In this example, the case in which the power transmitting-receiving sharing device **12** is used as a power supply (secondary battery) for portable computers, and the power receiving device **13** is used as a power supply (secondary battery) for cellular phones will be explained.

[**0059**] Firstly, the case in which the secondary battery **123** in the power transmitting-receiving sharing device **12** is charged by using the power transmitting device **11** will be explained. In this case, a user places the coil **125** in the power transmitting-receiving sharing device **12** near the coil **113** in the power transmitting device **11** such that the coil **125** and the coil **113** are electromagnetically coupled.

[**0060**] In this condition, if the user sets the setting for charging the secondary battery **123** by using the power transmitting device **11** to the setting unit **126**, the set data is input to the control circuit **127**. The control circuit **127** controls the display unit **128** to display that the secondary battery **123** is charged by using the power transmitting device **11** according to the set data. Also, the control circuit **127** controls the switches SW1 to SW3 to fix each contact to the power receiving circuit **122** side.

[**0061**] As a result, the power transmitting device **11** starts to charge the secondary battery **123** in the power transmitting-receiving sharing device **12**.

[**0062**] In this charging sequence, the secondary battery **123** is charged by the power receiving circuit **122**. Also, the charge discharge control circuit **124** monitors the charging conditions of the secondary battery **123**. When the charging operation is completed, the charge discharge control circuit **124** controls the power receiving circuit **122** to stop charging the secondary battery **123**.

[**0063**] Next, the case in which the secondary battery **134** in the power receiving device **13** is charged by the power transmitting device **11** will be explained. In this case, a user places the coil **131** in the power receiving device **13** near the coil **113** in the power transmitting device **11** such that the coil **131** and the coil **113** are electromagnetically coupled.

[**0064**] As a result, the power transmitting device **11** starts to charge the secondary battery **134** in the power receiving device **13**. In this charging sequence, the secondary battery **134** is charged by the power receiving circuit **132**. Also, the charge discharge control circuit **133** monitors the charging conditions of the secondary battery **134**. When the charging operation is completed, the charge discharge control circuit **133** controls the power receiving circuit **132** to stop charging the secondary battery **134**.

[**0065**] Next, the following case will be explained. In this case, a user is away from his or her office and carries a cellular phone in which the power receiving device **13** is used (included) and a portable computer in which the power transmitting-receiving sharing device **12** is used. The secondary battery **134** in the power receiving device **13** used in the cellular phone needs to be charged at the place where the user is located because the charge of the secondary battery **134** has run out.

[**0066**] In this case, the user places the coil **131** in the power receiving device **13** near the coil **125** in the power transmitting-receiving sharing device **12** such that the coil **131** and the coil **125** are electromagnetically coupled when the user is away from his or her office. In this condition, if the user sets the setting for charging the secondary battery **134** by using the power transmitting-receiving sharing device **12** to the setting unit **126**, the set data is input to the control circuit **127**. The control circuit **127** controls the display unit **128** so as to display that the secondary battery **134** is charged with the power transmitting-receiving sharing device **12** according to the set data. Also, the control circuit **127** controls the switches SW1 to SW3 so as to fix each contact to the opposite position shown in **FIG. 2**, namely to the power transmitting circuit **121** side.

[**0067**] As a result, the power transmitting-receiving sharing device **12** starts to charge the secondary battery **134** in the power receiving device **13**.

[**0068**] In this charging sequence, the secondary battery **134** is charged by the power receiving circuit **132**. Also, the charge discharge control circuit **133** monitors the charging conditions of the secondary battery **134**. When the charging operation is completed, the charge discharge control circuit **133** controls the power receiving circuit **132** to stop charging the secondary battery **134**.

[**0069**] As explained above, the first embodiment includes the power transmitting device **11** functioning as the charger, the power transmitting-receiving sharing device **12** functioning as the charger and including the secondary battery **123**, and the power receiving device **13** including the secondary battery **134**.

[**0070**] Thus, according to the first embodiment, a charging operation can be performed easily and promptly in the following case. A user goes out carrying a cellular phone and a portable personal computer. The power transmitting-receiving sharing device **12** is used as the power supply for the portable computer. The power receiving device **13** is used as the power supply for the cellular phone. If the charge of the secondary battery **134** in the power receiving device **13** used in the cellular phone runs out at the place where the user is located, the secondary battery **134** can be charged there easily and promptly using the power transmitting-receiving sharing device **12** carried.

[**0071**] In addition, in the power transmitting-receiving sharing device **12** of the first embodiment, the coil **125** is shared with the power transmitting circuit **121** and the power receiving circuit **122**. This enables the device to be compact and occupy little space.

[**0072**] Further, in the power transmitting-receiving sharing device **12** of the first embodiment, the setting to be used as the secondary battery or as the charger can be set arbitrarily and the setting condition can be recognized easily, thereby preventing false operation from an improper setting.

[**0073**] Next, another example of the power transmitting-receiving sharing device **12** used in the first embodiment will be explained with reference to **FIG. 3**.

[**0074**] In the first embodiment shown in **FIG. 2**, as described above, if the secondary battery **134** in the power receiving device **13** runs out when a user is away from his

or her office, the secondary battery **134** can be charged at the place where the user is located using the power transmitting-receiving sharing device **12**.

[**0075**] In this case, it is not preferable that the secondary battery **123** is exhausted in order to charge the secondary battery **134** in the power receiving device **13** while the secondary battery **123** in the power transmitting-receiving sharing device **12** is used.

[**0076**] The charge discharge control circuit **124** in the power transmitting-receiving sharing device **12** monitors the discharge conditions of the secondary battery **123** if the power transmitting circuit **121** is operated using the secondary battery **134**. Thus, when the secondary battery **123** is discharged, the charge discharge control circuit **124**, for example, performs counting with a count-down counter. The counting is referred to as remaining charge data of the secondary battery **123**.

[**0077**] Consequently, during the charging of the secondary battery **134** in the power receiving device **13**, the remaining charge data from the charge discharge control circuit **124** is input to a control circuit **127**A in a power transmitting-receiving sharing device **12**A shown in **FIG. 3**. If the value of the remaining charge data shows a predetermined value or less during the charging of the secondary battery **134** in the power receiving device **13**, the control circuit **127**A stops the power transmitting operation of the power transmitting circuit **121** or controls the switch SW3 so as to select its contact from the power transmitting circuit **122** side to the power receiving circuit **122** side.

[**0078**] The configuration of the remaining parts of the power transmitting-receiving sharing device **12**A are basically the same as those of the power transmitting-receiving sharing device **12** shown in **FIG. 2**. The same elements are given the same label and a duplicate explanation is omitted.

[**0079**] Next, A configuration of a contactless power transmitting device of a second embodiment of the present invention will be explained with reference to **FIG. 4**.

[**0080**] As shown in **FIG. 4**, a contactless power transmitting device of the second embodiment includes a power transmitting device **21** functioning as the charger, a power receiving device **22** including a secondary battery **223**, and a transformer **23** electromagnetically coupling the power transmitting device **21** and the power receiving device **22**. When the power transmitting device **21** charges the secondary battery in the power receiving device **22**, an improvement in safety and fraud prevention of the charging operation can be achieved.

[**0081**] Here, the power receiving device **22** is used, for example, as the power supply for cellular phones, portable computers, and the like.

[**0082**] As shown in **FIG. 4**, the power transmitting device **21** includes an AC/DC converter **211**, a power transmitting circuit **212**, an operation start switch **213**, a transformer **214**, a sensor **215** and a control circuit **216**.

[**0083**] The AC/DC converter **211**, which, for example, converts the alternating voltage of, for example 100 or 110 volts, supplied to homes to a predetermined direct current voltage, supplies the converted direct current voltage to the power transmitting circuit **212**. The power transmitting circuit **212**, which produces an alternating voltage having a predetermined frequency by using the direct current voltage from the AC/DC converter **211**, supplies the produced alternating voltage to a primary coil **231** included in the transformer **23**.

[**0084**] The operation start switch **213** instructs the start of power transmitting from the power transmitting circuit **212**, the instruction being input to the control circuit **216**. The transformer **214** electromagnetically couples the sensor **215** and power lines **217** and **218** that are connected to both ends of the primary coil **231** respectively. The sensor **215** detects an identification signal transmitted in the power lines **217** and **218**, the detected identification signal being input to the control circuit **216**.

[**0085**] When the control circuit **216** controls the power transmitting circuit **212** so as to start transmitting power by the instruction from the operation start switch **213**, prior to the power transmitting, the control circuit **216** controls the power transmitting circuit **212** so as to perform a pre-power transmission. During the pre-power transmission, the control circuit **216** determines whether or not an identification signal (described later) received by the sensor **215** coincides with an identification signal for reference.

[**0086**] In addition, as a result of the determination, if both coincide, the control circuit **216** controls the power transmitting circuit **212** so as to start transmitting power. If both fail to coincide, the control circuit **216** controls the power transmitting circuit **212** to not start transmitting power.

[**0087**] As shown in **FIG. 4**, the power receiving device **22** includes a power receiving circuit **221**, a charge discharge control circuit **222**, a secondary battery **223**, a nonvolatile memory **224**, an identification signal transmitting circuit **225** and a transformer **226**.

[**0088**] The power receiving circuit **221** rectifies an alternating voltage induced in a secondary coil **232** of the transformer **23** to a direct current voltage. That is, the power receiving circuit **221** is an AC-DC converting circuit. The direct current voltage produced in the power receiving circuit **221** is supplied to the secondary battery **223** through the charge discharge control circuit **222** so as to charge the secondary battery **223**.

[**0089**] The secondary battery **223** can be repeatedly used by charging after being discharged, for example, such as the lithium-ion battery. If the secondary battery **223** is charged by the power receiving circuit **221**, the charge discharge control circuit **222** controls the charging operation. If loads (not shown) are operated by the secondary battery **223**, the charge discharge control circuit **222** controls the discharge.

[**0090**] The nonvolatile memory **224** stores the identification signal to identify the power receiving device **22** as a form of digital data. The identification signal is read out by the identification signal transmitting circuit **225**. The identification signal transmitting circuit **225** supplies the identification signal read out from the nonvolatile memory **224** to the power lines **227** and **228** that are connected to both ends of the transformer **3** respectively through the transformer **226**.

[**0091**] Next, an operation example of the second embodiment configured as above-mentioned will be explained with reference to **FIG. 4**.

[0092] In this example, in the case in which the power receiving device **22** is used, for example, as the power supply (secondary battery) for cellular phones or portable computers, the case in which the secondary battery **223** in the power receiving device **22** is charged using the power transmitting device **21** will be explained.

[0093] In this case, a user places the primary coil **231** and the secondary coil **232** that are included in the transformer **23** near each other such that the coil **231** and the coil **232** are electromagnetically coupled. In this condition, if the user operates the operation start switch **213** in order to instruct the power transmitting circuit **212** to start transmitting power, the instructed data is input to the control circuit **216**.

[0094] The control circuit **216**, corresponding to the instructed data, controls the power transmitting circuit **212** so as to perform a pre-power transmission for a predetermined time prior to the power transmitting operation of the power transmitting circuit **212**. Since the power transmitting circuit **212** performs the pre-power transmission, the power transmitting circuit **212** produces an alternating voltage for the predetermined time. The produced alternating voltage is transmitted to the power receiving circuit **221** through the transformer **23**.

[0095] The power receiving circuit **221** notifies the identification signal transmitting circuit **225** that the pre-power transmission is performed at the same time that the power receiving circuit **221** rectifies the transmitted alternating voltage to a direct current voltage. Based on the notification, the identification signal transmitting circuit **225** reads out the identification signal to identify the power receiving device **22** from the nonvolatile memory **224** so as to supply the read out identification signal, through the transformer **226**, to the power lines **227** and **228** that are connected to both ends of the transformer **23** respectively.

[0096] Since the identification signal is transmitted to the power lines **217** and **218** through the transformer **23**, the sensor **215** detects the identification signal in the power lines **217** and **218**. Then, the detected identification signal is input to the control circuit **216**.

[0097] The control circuit **216** determines whether or not the identification signal detected by the sensor **215** coincides with an identification signal for reference. As a result of the determination, if both coincide, the control circuit **216** controls the power transmitting circuit **212** so as to start transmitting power. If both fail to coincide, the control circuit **216** controls the power transmitting circuit **212** to not start transmitting power.

[0098] As explained above, in the second embodiment, when the power transmitting device **21** charges the secondary battery **223** in the power receiving device **22**, the power transmitting device **21** determines whether or not the power receiving device **22** is a correct (qualified) device prior to the charging operation. If the power receiving device **22** is the correct device, then the power transmitting device **21** starts charging. Consequently, in the second embodiment, if there is a difference between the power transmitting device **21** and the power receiving device **22** in specifications or the like, the power transmitting device cannot perform the charging operation, thereby enabling an improvement in safety and fraud prevention of the charging operation to be achieved.

[0099] Next, a configuration of a contactless power transmitting device of a third embodiment of the present invention will be explained with reference to **FIG. 5**.

[0100] In the second embodiment shown in **FIG. 4**, as above-mentioned, safety and fraud prevention in the charging operation of the power transmitting device **21** can be achieved. However, since a fee for the charging operation cannot be collected from users, the device cannot be used in a gas station or the like.

[0101] As shown in **FIG. 5**, the third embodiment includes a power transmitting device **21**A functioning the charger, a power receiving device **22**A including a secondary battery, a transformer **23** electromagnetically coupling the power transmitting device **21**A and the power receiving device **22**A. If the power transmitting device **21**A charges the secondary battery in the power receiving device **22**A, the charging operation can correctly be performed and a fee for the charging operation can be collected from users, thereby enabling the device to be installed and used in a gas station or the like.

[0102] Here, the power receiving device **22**A is used, for example, as the power supply for cellular phones, portable computers, or the like.

[0103] The third embodiment is based on the configurations of the second embodiment shown in **FIG. 4** and differs in the following elements. As shown in **FIG. 5**, a transformer **219**A, a power meter **219**B and a display unit **219**C are added. The control circuit **216**, the nonvolatile memory **224** and the identification signal transmitting circuit **225** that are shown in **FIG. 4** are respectively replaced with a control circuit **216**A, a nonvolatile memory **224**A and an identification signal transmitting circuit **225**A that are shown in **FIG. 5**.

[0104] As shown in **FIG. 5**, the power transmitting device **21**A includes the AC/DC converter **211**, the power transmitting circuit **212**, the operation start switch **213**, a transformer **219**A, a power meter **219**B, the transformer **214**, the sensor **215**, a control circuit **216**A and a display unit **219**C.

[0105] The power meter **219**B measures power supplied to the power transmitting circuit **212** from the AC/DC converter **211** and is electromagnetically coupled to output lines of the AC/DC converter **211** through the transformer **219**A. The power measured by the power meter **219**B is input to the control circuit **216**A. The display unit **219**C displays the fee for the charging operation that is calculated by the control circuit **216** as described later.

[0106] When the control circuit **216**A controls the power transmitting circuit **212** so as to start transmitting power by the instruction from the operation start switch **213**, prior to the power transmitting, the control circuit **216**A controls the power transmitting circuit **212** so as to perform a pre-power transmission for a predetermined time. During the pre-power transmission, the control circuit **216** determines whether or not an identification signal (described later) received by the sensor **215** coincides with an identification signal for reference.

[0107] In addition, as a result of the determination, if both coincide, the control circuit **216**A controls the power transmitting circuit **212** so as to start transmitting power. At the same time, the control circuit **216**A loads the power mea-

sured by the power meter **219**B so as to start accumulating the power. If both fail to coincide, the control circuit **216**A controls the power transmitting circuit **212** to not start transmitting power.

[**0108**] Further, if the sensor **215** receives a charge completion signal described later, the control circuit **216**A calculates a fee for the charging operation based on the accumulated value of the power and then controls the display unit **219**C so as to display the calculated fee for the charging operation.

[**0109**] Since configurations of the remaining parts of the power transmitting device **21**A are the same as those of the power transmitting device **21** shown in **FIG. 4**, explanations for them are omitted.

[**0110**] As shown in **FIG. 5**, the power receiving device **22**A includes the power receiving circuit **221**, the charge discharge control circuit **222**, the secondary battery **223**, a nonvolatile memory **224**A, a transmitting circuit **225**A and the transformer **226**.

[**0111**] The nonvolatile memory **224**A stores the identification signal to identify the power receiving device **22**A and the charge completion signal to show the charge completion of the power receiving device **22**A as a form of digital data. The identification signal and the charge completion signal are read out by the transmitting circuit **225**A. The transmitting circuit **225**A supplies the identification signal or the charge completion signal read out from the nonvolatile memory **224**A to the power lines **227** and **228** that are connected to both ends of the transformer **23** respectively through the transformer **226**.

[**0112**] Next, an operation example of the third embodiment configured as above-mentioned will be explained with reference to **FIG. 5**.

[**0113**] In this example, in the case in which the power receiving device **22**A is used, for example, as the power supply for cellular phones or portable computers, the case in which the secondary battery **223** in the power receiving device **22**A is charged using the power transmitting device **21**A will be explained.

[**0114**] In this case, a user places the primary coil **231** and the secondary coil **232** that are included in the transformer **23** near each other such that the coil **231** and the coil **232** are electromagnetically coupled.

[**0115**] In this condition, if the user operates the operation start switch **213** in order to instruct the power transmitting circuit **212** to start transmitting power, the instructed data is input to the control circuit **216**A.

[**0116**] The control circuit **216**A, corresponding to the instructed data, controls the power transmitting circuit **212** so as to perform a pre-power transmission for a predetermined time prior to the power transmitting operation of the power transmitting circuit **212**. Since the power transmitting circuit **212** performs the pre-power transmission, the power transmitting circuit **212** produces an alternating voltage for the predetermined time. The produced alternating voltage is transmitted to the power receiving circuit **221** through the transformer **23**.

[**0117**] The power receiving circuit **221** notifies the transmitting circuit **225**A that the pre-power transmission is performed at the same time that the power receiving circuit **221** rectifies the transmitted alternating voltage to a direct current voltage. Based on the notification, the transmitting circuit **225**A reads out the identification signal to identify the power receiving device **22**A from the nonvolatile memory **224**A so as to supply the read out identification signal, through the transformer **226**, to the power lines **227** and **228** that are connected to both ends of the transformer **23** respectively.

[**0118**] Since the identification signal is transmitted to the power lines **217** and **218** through the transformer **23**, the sensor **215** detects the identification signal in the power lines **217** and **218**. Then, the detected identification signal is input to the control circuit **216**A.

[**0119**] The control circuit **216**A determines whether or not the identification signal detected by the sensor **215** coincides with an identification signal for reference. As a result of the determination, if both coincide, the control circuit **216**A controls the power transmitting circuit **212** so as to start transmitting power. At the same time, the control circuit **216**A loads the power measured by the power meter **219**B so as to start accumulating the power. If both fail to coincide, the control circuit **216**A controls the power transmitting circuit **212** to not start transmitting power.

[**0120**] The power transmitting device **21**A starts charging in this way. In the charging time, the power receiving circuit **221** charges the secondary battery **223** in the power receiving device **22**A. In addition, the charge discharge control circuit **222** monitors the charging conditions of the secondary battery **223**. Upon completion of the charging operation, the charge discharge control circuit **222** controls the power receiving circuit **221** so as to stop charging the secondary battery **223**. At the same time, the charge discharge control circuit **222** sends the charge completion signal showing the completion of the charging operation to the transmitting circuit **225**A.

[**0121**] As a result, the transmitting circuit **225**A reads out the charge completion signal showing the charge completion of the secondary battery **223** from the nonvolatile memory **224**A so as to supply the read out charge completion signal, through the transformer **226**, to the power lines **227** and **228** that are connected to both ends of the transformer **23** respectively.

[**0122**] Since the charge completion signal is transmitted to the power lines **217** and **218** through the transformer **23**, the sensor **215** detects the charge completion signal in the power lines **217** and **218**. Then, the detected charge completion signal is input to the control circuit **216**A.

[**0123**] If the sensor **215** receives the charge completion signal, the control circuit **216**A calculates a fee for the charging operation based on the accumulated value of the power and then controls the display unit **219**C so as to display the calculated fee for the charging operation.

[**0124**] Accordingly, a user of the third embodiment can pay the fee for the charging operation.

[**0125**] Next, a configuration of a contactless power transmitting device of a fourth embodiment of the present invention will be explained with reference to **FIG. 6**.

[**0126**] In the first embodiment shown in **FIG. 2**, as described above, if the secondary battery **134** in the power

receiving device **13** runs out when a user is away from his or her office, the secondary battery **134** can be charged at the place where the user is located using the power transmitting-receiving sharing device **12**. In the second embodiment shown in **FIG. 4**, as above-mentioned, when the power transmitting device **21** charges the secondary battery **223** in the power receiving device **22**, an improvement in safety and fraud prevention or the like in the charging operation can be achieved.

[**0127**] Therefore, in the fourth embodiment, each configuration of the first embodiment and second embodiment are organized such that the secondary battery of cellular phones or the like can be charged at the place where a user is located when the user is away from his or her office and an improvement in safety of the charging operation and fraud prevention or the like in the charging operation also can be achieved.

[**0128**] As shown in **FIG. 6**, the fourth embodiment includes a power transmitting device **31** functioning as the charger, a power transmitting-receiving sharing device **32** functioning as the charger and including a secondary battery **323**, and a power receiving device **33** including the secondary battery **334**.

[**0129**] The power transmitting device **31** is electromagnetically coupled to the power transmitting-receiving sharing device **32** or the power receiving device **33** so as to form the contactless power transmitting device respectively. If the power transmitting device **31** is coupled to the power transmitting-receiving sharing device **32**, the power transmitting device **31** charges the secondary battery **323** included in the power transmitting-receiving sharing device **32**. If the power transmitting device **31** is coupled to the power receiving device **33**, the power transmitting device **31** charges the secondary battery **334** included in the power receiving device **33**.

[**0130**] In addition, the power transmitting-receiving sharing device **32** forms a contactless power transmitting device by electromagnetically coupling to the power receiving device **33** so as to charge the secondary battery **334** included in the power receiving device **33**. Prior to the charging operation, the power transmitting-receiving sharing device **32** determines safety, fraud and the like of the charging operation by utilizing the identification signal. If the safety and like can be ensured, the power transmitting-receiving sharing device **32** starts charging.

[**0131**] Here, the power transmitting-receiving sharing device **32** is used, for example, as a power supply for portable computers. The power receiving device **33** is used, for example, as a power supply for cellular phones.

[**0132**] Next, a specific configuration of each part of the fourth embodiment will be explained with reference to **FIG. 6**.

[**0133**] As shown in **FIG. 6**, the power transmitting device **31** includes an AC/DC converter **311**, a power transmitting circuit **312**, and a coil **313**.

[**0134**] The AC/DC converter **311**, which, for example, converts the alternating voltage of, for example 100 or 110 volts, supplied to homes to a predetermined direct current voltage, supplies the converted direct current voltage to the power transmitting circuit **312**. The power transmitting circuit **312**, which produces an alternating voltage having a predetermined frequency by using the direct current voltage from the AC/DC converter **311**, supplies the produced alternating voltage to the coil **313**.

[**0135**] As shown in **FIG. 6**, the power transmitting-receiving sharing device **32** includes a power transmitting circuit **321**, a power receiving circuit **322**, a secondary battery **323**, a charge discharge control circuit **324**, a coil **325**, the switches SW**1** to SW**3**, a setting unit **326**A, an operation start switch **326**B, a control circuit **327**, a display unit **328**, a transformer **329**A and a sensor **329**B. The power transmitting circuit **321** produces an alternating voltage having a predetermined frequency using the direct current voltage supplied from the secondary battery **323** in operation, supplying the produced alternating voltage to the coil **325**. If electric power is transmitted from the power transmitting device **31** to the power receiving circuit **322** by electromagnetically coupling between the coil **325** in the power transmitting-receiving sharing device **32** and the coil **313** in the power transmitting device **31**, the power receiving circuit **322** rectifies an alternating voltage induced in the coil **325** to a direct current voltage. That is, the power receiving circuit **322** is an AC-DC converting circuit. The direct current voltage produced in the power receiving circuit **322** is supplied to the secondary battery **323** through the charge discharge control circuit **324** so as to charge the secondary battery **323**.

[**0136**] The secondary battery **323** can be repeatedly used by charging after being discharged, for example, such as the lithium-ion battery.

[**0137**] If the secondary battery **323** is charged by the power receiving circuit **322**, the charge discharge control circuit **324** controls the charging operation. If the power transmitting circuit **321** or loads (not shown) are operated by the secondary battery **323**, the charge discharge control circuit **324** controls the discharge.

[**0138**] If the coil **325** is used by approaching the coil **313** in the power transmitting device **31**, the coil **325** and the coil **313** are electromagnetically coupled so as to form a transformer therebetween. If the coil **325** is used by approaching the coil **331** in the power receiving device **33**, the coil **325** and the coil **331** are electromagnetically coupled so as to form a transformer therebetween. That is, the coils **313**, **325**, and **331** can be electromagnetically interconnected and also be separated mutually.

[**0139**] The switches SW**1** and SW**2** selectively couple the coil **325** to either the power transmitting circuit **321** or the power receiving circuit **322**.

[**0140**] Also, the switch SW**3** selectively couples the secondary battery **323** to either the power transmitting circuit **321** or the power receiving circuit **322**.

[**0141**] Each contact of the switches SW**1** to SW**3** is normally, for example, coupled to the power receiving circuit **322** side as shown in **FIG. 6**.

[**0142**] The setting unit **326**A, in which a user selectively sets the use of the power transmitting circuit **321** or the power receiving circuit **322**, inputs the set data to the control circuit **327**. The operation start switch **326**B, which instructs the start of the power transmitting from the power transmitting circuit **321**, inputs the instruction data to the control

circuit **327**. The transformer **329**A electromagnetically couples the sensor **329**B to the power lines **329**C and **329**D that are connected to both ends of the coil **325** respectively.

[**0143**] The sensor **329**B, which detects an identification signal transmitted in the power lines **329**C and **329**D, inputs the detected identification signal to the control circuit **327**. The display unit **328**, which is configured with a liquid crystal display unit or the like, displays predetermined information as above described.

[**0144**] The control circuit **327** displays the operating conditions on the display unit **328** according to the set data from the setting unit **326**A and controls the contact switching of the switches SW**1** to SW**3**.

[**0145**] When the control circuit **327** controls the power transmitting circuit **321** so as to start transmitting power by the instruction from the operation start switch **326**B, prior to the power transmitting, the control circuit **327** controls the power transmitting circuit **321** so as to perform a pre-power transmission for a predetermined time. During the pre-power transmission, the control circuit **327** determines whether or not an identification signal (described later) received by the sensor **329**A coincides with an identification signal for reference.

[**0146**] In addition, as a result of the determination, if both coincide, the control circuit **327** controls the power transmitting circuit **321** so as to start transmitting power. If both fail to coincide, the control circuit **327** controls the power transmitting circuit **321** to not start transmitting power.

[**0147**] As shown in **FIG. 6**, the power receiving device **33** includes a coil **331**, a power receiving circuit **332**, a charge discharge control circuit **333**; a secondary battery **334**, a nonvolatile memory **335**, an identification signal transmitting circuit **336** and a transformer **337**.

[**0148**] If the coil **331** is used by approaching the coil **313** in the power transmitting device **31**, the coil **331** and the coil **313** are electromagnetically coupled so as to form a transformer therebetween. Also, if the coil **331** is used by approaching the coil **325** in the power transmitting-receiving sharing device **32**, the coil **331** and the coil **325** are electromagnetically coupled so as to form a transformer therebetween. The alternating voltage induced in the coil **331** by electromagnetic coupling is supplied to the power receiving circuit **332**.

[**0149**] The power receiving circuit **332** rectifies the alternating voltage induced in the coil **331** to a direct current voltage so as to be output.

[**0150**] The direct current voltage output from the power receiving circuit **332** is supplied to the secondary battery **334** through the charge discharge control circuit **333** so as to charge the secondary battery **334**. If the secondary battery **334** is charged by the output from the power receiving circuit **332**, the charge discharge control circuit **333** controls the charging operation. If loads (not shown) are operated by the secondary battery **334**, the charge discharge control circuit **333** controls the discharge.

[**0151**] The nonvolatile memory **335** stores the identification signal to identify the power receiving device **32** as a form of digital data. The identification signal is read out by the identification signal transmitting circuit **336**. The identification signal transmitting circuit **336** supplies the identification signal read out from the nonvolatile memory **335** to the power lines **338** and **339** that are connected to both ends of the coil **331** respectively through the transformer **337**.

[**0152**] Next, an operation example of the fourth embodiment configured as above-mentioned will be explained with reference to **FIG. 6**.

[**0153**] In this example, the case in which the power transmitting-receiving sharing device **32** is used as a power supply for portable computers, and the power receiving device **33** is used as a power supply for cellular phones will be explained.

[**0154**] Firstly, the case in which the secondary battery **323** in the power transmitting-receiving sharing device **32** is charged using the power transmitting device **31** will be explained. In this case, a user places the coil **325** in the power transmitting-receiving sharing device **32** near the coil **313** in the power transmitting device **31** such that the coil **325** and the coil **313** are electromagnetically coupled.

[**0155**] In this condition, if the user sets the setting for charging the secondary battery **323** using the power transmitting device **31** to the setting unit **326**A, the set data is input to the control circuit **327**. The control circuit **327** controls the display unit **328** to display that the secondary battery **323** is charged using the power transmitting device **31** according to the set data. Also, the control circuit **327** controls the switches SW**1** to SW**3** so as to fix each contact to the power receiving circuit **322** side.

[**0156**] As a result, the power transmitting device **31** starts to charge the secondary battery **323** in the power transmitting-receiving sharing device **32**.

[**0157**] In this charging sequence, the secondary battery **323** is charged by the power receiving circuit **322**. Also, the charge discharge control circuit **324** monitors the charging conditions of the secondary battery **323**. When the charging operation is completed, the charge discharge control circuit **324** controls the power receiving circuit **322** to stop charging the secondary battery **323**.

[**0158**] Next, the case in which the secondary battery **334** in the power receiving device **33** is charged by the power transmitting device **31** will be explained. In this case, a user places the coil **331** in the power receiving device **33** near the coil **313** in the power transmitting device **31** such that the coil **331** and the coil **313** are electromagnetically coupled.

[**0159**] As a result, the power transmitting device **31** starts to charge the secondary battery **334** in the power receiving device **33**.

[**0160**] In this charging sequence, the secondary battery **334** is charged by the power receiving circuit **332**. Also, the charge discharge control circuit **333** monitors the charging conditions of the secondary battery **334**. When the charging operation is completed, the charge discharge control circuit **333** controls the power receiving circuit **332** to stop charging the secondary battery **324**.

[**0161**] Next, the following case will be explained. In the case, a user is away from his or her office and carries a cellular phone in which the power receiving device **33** is used (included) and a portable computer in which the power transmitting-receiving sharing device **32** is used. Since the charge of the secondary battery **334** runs out, the secondary

battery **334** in the power receiving device **33** used in the cellular phone needs to be charged at the place where the user is located.

[**0162**] In this case, the user places the coil **131** in the power receiving device **33** near the coil **325** in the power transmitting-receiving sharing device **32** such that the coil **331** and the coil **325** are electromagnetically coupled at the place where the user is located.

[**0163**] In this condition, if the user sets the setting for charging the secondary battery **334** using the power transmitting-receiving sharing device **32** to the setting unit **326**A, the set data is input to the control circuit **327**. The control circuit **327** controls the display unit **328** to display that the secondary battery **334** is charged by the power transmitting-receiving sharing device **32** according to the set data. Also, the control circuit **327** controls the switches SW**1** to SW**3** so as to fix each contact to the opposite position shown in **FIG. 2**, namely to the power transmitting circuit **321** side.

[**0164**] In this condition, if the user operates the operation start switch **326**B in order to instruct the power transmitting circuit **321** to start the operation of transmitting power, the instructed data is input to the control circuit **327**. The control circuit **327**, corresponding to the instructed data, controls the power transmitting circuit **321** so as to perform a pre-power transmission for a predetermined time prior to the power transmitting operation of the power transmitting circuit **321**. Since the power transmitting circuit **321** performs the pre-power transmission, the power transmitting circuit **321** produces an alternating voltage for the predetermined time. The produced alternating voltage is transmitted to the power receiving circuit **332** in the power receiving circuit **33** through the coil **325** and the coil **331** that are electromagnetically coupled.

[**0165**] The power receiving circuit **332** notifies the identification signal transmitting circuit **336** that the pre-power transmission is performed at the same time that the power receiving circuit **332** rectifies the transmitted alternating voltage to a direct current voltage. Based on the notification, the identification signal transmitting circuit **336** reads out the identification signal to identify the power receiving device **33** from the nonvolatile memory **335** so as to supply the read out identification signal, through the transformer **337**, to the power lines **338** and **339** that are connected to both ends of the coil **331** respectively.

[**0166**] Since the identification signal is transmitted to the power lines **329**C and **329**D through the coil **331** and the coil **325** that are electromagnetically coupled, the sensor **329**B detects the identification signal in the power lines **329**C and **329**D. Then, the detected identification signal is input to the control circuit **327**.

[**0167**] The control circuit **327** determines whether or not the identification signal detected by the sensor **329**A coincides with an identification signal for reference. As a result of the determination, if both coincide, the control circuit **327** controls the power transmitting circuit **321** so as to start transmitting power. If both fail to coincide, the control circuit **327** controls the power transmitting circuit **321** to not start transmitting power.

[**0168**] If the power transmitting circuit **321** starts the power transmitting, the power transmitting-receiving sharing device **32** starts to charge the secondary battery **334** in the power receiving device **33**.

[**0169**] In this charging sequence, the secondary battery **334** is charged by the power receiving circuit **332**. Also, the charge discharge control circuit **333** monitors the charging conditions of the secondary battery **334**. When the charging operation is completed, the charge discharge control circuit **333** controls the power receiving circuit **332** so as to stop charging the secondary battery **334**.

[**0170**] As above explained, in the fourth embodiment, the power transmitting-receiving sharing device **32** forms a contactless power transmitting device by electromagnetically coupling to the power receiving device **33** so as to charge the secondary battery **334** included in the power receiving device **33**. Prior to the charging operation, the power transmitting-receiving sharing device **32** determines safety, fraud and the like of the charging operation by utilizing the identification signal. Therefore, an improvement in safety and fraud prevention in the charging operation can be achieved.

[**0171**] Next, a fifth embodiment of the present invention will be explained with reference to **FIG. 7**.

[**0172**] In the fourth embodiment shown in **FIG. 6**, as above described, if the secondary battery **334** in the power receiving device **33** runs out when a user is away from his or her office, the secondary battery **334** can be charged at the place where the user is located using the power transmitting-receiving sharing device **32**.

[**0173**] In this case, it is not preferable that the secondary battery **323** is exhausted in order to charge the secondary battery **334** in the power receiving device **33** while the secondary battery **323** in the power transmitting-receiving sharing device **32** is used.

[**0174**] The charge discharge control circuit **324** in the power transmitting-receiving sharing device **32** monitors the discharging conditions of the secondary battery **323** if the power transmitting circuit **321** is operated using the secondary battery **323**. Thus, when the secondary battery **323** is discharged, the charge discharge control circuit **324**, for example, performs counting with a count-down counter. The counting is referred as remaining charge data of the secondary battery **323**.

[**0175**] In the fifth embodiment, when the secondary battery **324** in the power receiving device **33** is charged using the power transmitting-receiving sharing device **32**, the secondary battery **323** in the power transmitting-receiving sharing device **32** is prevented from running out by using its remaining charge data.

[**0176**] For this purpose, in the fifth embodiment, the power transmitting-receiving sharing device **32** shown in **FIG. 6** is replaced with a power transmitting-receiving sharing device **32**A shown in **FIG. 7**.

[**0177**] Consequently, during the charging of the secondary battery **334** in the power receiving device **33**, the remaining charge data from the charge discharge control circuit **324** is input to a control circuit **327**A in the power transmitting-receiving sharing device **32**A.

[**0178**] If the value of the remaining charge data shows a predetermined value or less during the charging of the

secondary battery **334** in the power receiving device **33**, the control circuit **327**A stops the power transmitting operation of the power transmitting circuit **321** or controls the switch SW3 so as to select its contact from the power receiving circuit **321** side to the power transmitting circuit **322** side.

[**0179**] The configuration of the remaining parts of the power transmitting-receiving sharing device **32**A are the same as those of the power transmitting-receiving sharing device **32** shown in **FIG. 6**. The same elements are given the same label and a duplicate explanation is omitted.

[**0180**] Also, since the power transmitting device **31** and the power receiving device **33** in the fifth embodiment are the same as the power transmitting device **31** and the power receiving device **33** in **FIG. 6**, explanations for them are omitted.

[**0181**] As above explained, according to the fifth embodiment, when the secondary battery **324** in the power receiving device **33** is charged using the power transmitting-receiving sharing device **32** when a user is away from his or her office, the secondary battery **323** in the power transmitting-receiving sharing device **32** can be prevented from running out.

What is claimed is:

1. A contactless power transmitting device, comprising:

a power transmitting device;

a power transmitting-receiving sharing device; and

a power receiving device,

wherein the power transmitting device includes:

a first coil; and

a power transmitting means producing an alternating current supplied to the first coil if electromagnetically coupling the first coil to one of a second coil and a third coil;

the power transmitting-receiving sharing device includes:

the second coil;

a first secondary battery;

a power transmitting means producing an alternating current supplied to the second coil using the first secondary battery as a power supply if electromagnetically coupling the second coil to the third coil; and

a power receiving means converting an alternating current induced in the second coil to a direct current if electromagnetically coupling the second coil to the first coil to charge the first secondary battery with the converted direct current; and

the power receiving device includes:

the third coil;

a second secondary battery; and

a power receiving means converting an alternating current induced in the third coil to a direct current if electromagnetically coupling the third coil to one of the first coil and the second coil to charge the second secondary battery with the converted direct current.

2. A contactless power transmitting device, comprising:

a power transmitting device;

a power transmitting-receiving sharing device; and

a power receiving device,

wherein the power transmitting device includes:

a first coil; and

a power transmitting means producing an alternating current supplied to the first coil;

the power transmitting-receiving sharing device includes:

a second coil;

a first secondary battery;

a power transmitting means producing an alternating current supplied to the second coil;

a power receiving means converting an alternating current induced in the second coil;

a first coupling means selectively coupling the second coil to one of the power transmitting means and the power receiving means;

a second coupling means selectively coupling the first secondary battery to one of the power transmitting means and the power receiving means; and

a control means controlling the coupling of the first coupling means and the second coupling means respectively based on selection data; and

the power receiving device including:

a third coil;

a second secondary battery; and

a power receiving means converting an alternating current induced in the third coil to a direct current to charge the second secondary battery with the converted direct current,

wherein the first coil, the second coil, and the third coil are electromagnetically coupled to each other and separable from each other.

3. The contactless power transmitting device according to claim 2, wherein:

the power transmitting-receiving sharing device further includes:

a setting means selectively setting a use of one of the power transmitting means and the power receiving means to the control means; and

a display means displaying a setting condition of the setting means; and

the control means controls the coupling of the first coupling means and the second coupling means based on a setting of the setting means.

4. The contactless power transmitting device according to claim 2, wherein:

the power transmitting-receiving sharing device further includes a remaining charge measuring means measuring a remaining charge of the first secondary battery if the first secondary battery is used as a power supply for the power transmitting means; and

the control means stops operation of the power transmitting means if a value of the measured remaining charge of the remaining charge measuring means is equal to or less than a predetermined value.

5. A contactless power transmitting device, comprising:

a power transmitting device;

a power receiving device; and

a transformer,

wherein the power transmitting device includes:

a power transmitting means producing an alternating current supplied to a first coil;

a receiving means receiving an identification signal to identify the power receiving device, the identification signal being transmitted in a power line coupled to the first coil; and

a control means controlling a power transmitting of the power transmitting means at a starting time of transmitting power;

the power receiving device includes:

a power receiving means converting an alternating current induced in a second coil to a direct current; and

a transmitting means producing the identification signal transmitted in a power line coupled to the second coil to supply the produced identification signal to the power line; and

the transformer includes the first coil coupled to the power transmitting device and the second coil coupled to the power receiving device, the first coil and the second coil being electromagnetically coupled to each other and separable from each other, and wherein

the control means:

controls the power transmitting means to perform a pre-power transmission for a predetermined time before starting to transmit power by electromagnetically coupling the first coil and the second coil;

determines whether the identification signal received by the receiving means coincides with an identification signal for reference during the pre-power transmission, and

controls the power transmitting means to start transmitting power if both identification signals coincide with each other, and to not start transmitting power if both identification signals do not coincide with each other.

6. A contactless power transmitting device, comprising:

a power transmitting device;

a power receiving device; and

a transformer,

wherein the power transmitting device includes:

a power transmitting means producing an alternating current supplied to a first coil;

a power meter measuring power transmitted by the power transmitting means;

a receiving means respectively receiving an identification signal to identify the power receiving device and an operation completion signal to show completion of a charge operation of a power receiving means, the identification signal, and the operation completion signal that are transmitted in a power line coupled to the first coil; and

a control means controlling a power transmitting of the power transmitting means according to a reception of the receiving means;

the power receiving device includes:

the power receiving means converting an alternating current induced in a second coil to a direct current; and

a transmitting means respectively producing the identification signal and the operation completion signal that are transmitted in a power line coupled to the second coil to supply the produced identification signal and the operation completion signal to the power line respectively;

the transformer includes the first coil coupled to the power transmitting device and the second coil coupled to the power receiving device, the first coil and the second coil being electromagnetically coupled to each other and separable from each other, and wherein:

the control means:

controls the power transmitting means to perform a pre-power transmission for a predetermined time before starting to transmit power by electromagnetically coupling the first coil and the second coil;

determines whether the identification signal received by the receiving means coincides with an identification signal for reference during the pre-power transmission;

controls the power transmitting means to start transmitting power and simultaneously starts to load a measured value of the power meter if both identification signals coincide with each other;

controls the power transmitting means to not start transmitting power, and calculates a fee for charging based on the measured value in a case of receiving the operation completion signal by the receiving means after starting to transmit power by the power transmitting means, if both identification signals do not coincide with each other.

7. The contactless power transmitting device according to claim 6, further comprising a display means displaying the fee for charging calculated by the control means.

8. A contactless power transmitting device, comprising:

a power transmitting device;

a power receiving device; and

a power transmitting-receiving sharing device,

wherein the power transmitting device includes:

a first coil; and

a power transmitting means producing an alternating current supplied to the first coil;

the power receiving device includes:

a third coil;

a second secondary battery;

a power receiving means converting an alternating current induced in the third coil to a direct current to charge the second secondary battery with the converted direct current; and

a transmitting means producing an identification signal to identify the power receiving device to supply the produced identification signal to the power line when starting the power receiving means to receive power, the identification signal being transmitted in a power line coupled to the third coil;

the power transmitting-receiving sharing device includes:

a second coil;

a first secondary battery;

a power transmitting means producing an alternating current supplied to the second coil;

a power receiving means converting an alternating current induced in the second coil to a direct current;

a receiving means receiving the identification signal from the transmitting means, the identification signal being transmitted in a power line coupled to the second coil;

a first coupling means selectively coupling the second coil to one of the power transmitting means and the power receiving means;

a second coupling means selectively coupling the first secondary battery to one of the power transmitting means and the power receiving means; and

a control means controlling the power transmitting means, and wherein

the control means:

controls the power transmitting means and the second coil to be coupled by the first coupling means and, simultaneously, the first secondary battery and the power transmitting means to be coupled by the second coupling means;

controls the power transmitting means to perform a pre-power transmission for a predetermined time before starting to transmit power by electromagnetically coupling the second coil and the third coil;

determines whether the identification signal received by the receiving means coincides with an identification signal for reference during the pre-power transmission;

controls the power transmitting means to start transmitting power if both identification signals coincide with each other, and to not start transmitting power if both identification signals do not coincide with each other,

wherein the first coil, the second coil, and the third coil are electromagnetically coupled to each other and separable from each other.

9. The contactless power transmitting device according to claim 8, wherein:

the power transmitting-receiving sharing device further includes a remaining charge measuring means measuring a remaining charge of the first secondary battery if the first secondary battery is used as a power supply for the power transmitting means; and

the control means stops operation of the power transmitting means if a value of the measured remaining charge of the remaining charge measuring means is equal to or less than a predetermined value.

* * * * *