(12) INTERNATIONAL APPLICATION PUBLISHED UNDER THE PATENT COOPERATION TREATY (PCT)

(19) World Intellectual Property Organization
International Bureau

(43) International Publication Date
18 December 2003 (18.12.2003)

PCT

(10) International Publication Number
WO 03/105308 A1

(51) International Patent Classification[7]: H02J 7/00, H01F 38/14

(21) International Application Number: PCT/AU03/00721

(22) International Filing Date: 10 June 2003 (10.06.2003)

(25) Filing Language: English

(26) Publication Language: English

(30) Priority Data:

0213374.2	10 June 2002 (10.06.2002)	GB
0226893.6	18 November 2002 (18.11.2002)	GB
0305428.5	10 March 2003 (10.03.2003)	GB

(71) Applicant *(for all designated States except US)*: **CITY UNIVERSITY OF HONG KONG** [—/—]; Tat Chee Avenue, Kowloon Tong, Kowloon, Hong Kong (CN).

(72) Inventor; and
(75) Inventor/Applicant *(for US only)*: **HUI, Ron, Shu-yuen** [AU/—]; 2B, Block 29, Greenwood Terrace, 26-28 Sui Wo Road, Shatin, New Territories, Hong Kong (CN).

(74) Agent: **HODGKINSON OLD MCINNES**; Level 3, 20 Alfred Street, Milsons Point, NSW 2061 (AU).

(81) Designated States *(national)*: AE, AG, AL, AM, AT, AU, AZ, BA, BB, BG, BR, BY, BZ, CA, CH, CN, CO, CR, CU, CZ, DE, DK, DM, DZ, EC, EE, ES, FI, GB, GD, GE, GH, GM, HR, HU, ID, IL, IN, IS, JP, KE, KG, KP, KR, KZ, LC, LK, LR, LS, LT, LU, LV, MA, MD, MG, MK, MN, MW, MX, MZ, NI, NO, NZ, OM, PH, PL, PT, RO, RU, SC, SD, SE, SG, SK, SL, TJ, TM, TN, TR, TT, TZ, UA, UG, US, UZ, VC, VN, YU, ZA, ZM, ZW.

(84) Designated States *(regional)*: ARIPO patent (GH, GM, KE, LS, MW, MZ, SD, SL, SZ, TZ, UG, ZM, ZW), Eurasian patent (AM, AZ, BY, KG, KZ, MD, RU, TJ, TM), European patent (AT, BE, BG, CH, CY, CZ, DE, DK, EE, ES, FI, FR, GB, GR, HU, IE, IT, LU, MC, NL, PT, RO, SE, SI, SK, TR), OAPI patent (BF, BJ, CF, CG, CI, CM, GA, GN, GQ, GW, ML, MR, NE, SN, TD, TG).

Published:
— *with international search report*

For two-letter codes and other abbreviations, refer to the "Guidance Notes on Codes and Abbreviations" appearing at the beginning of each regular issue of the PCT Gazette.

(54) Title: PLANAR INDUCTIVE BATTERY CHARGER

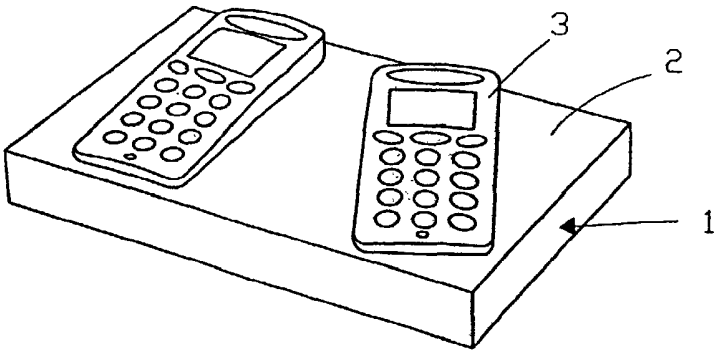

(57) Abstract: There is provided a planar inductive battery charging system designed to enable electronic devices to be recharged. The system includes a planar charging module having a charging surface on which a device is placed. Within the charging module and parallel to the charging surface is at least one and preferably an array of primary windings that couple energy inductively to a secondary winding formed in the device. The invention also provides secondary modules that allow the system to be used with conventional electronic devices not formed with secondary windings.

WO 03/105308 A1

SAMSUNG EXHIBIT 1036

PLANAR INDUCTIVE BATTERY CHARGER

FIELD OF THE INVENTION

This invention relates to a battery charger, and in particular to a battery charger having a planar surface on which one or more battery powered devices may be placed for battery recharging through induction. The invention also extends to a battery charging system for use with conventional electronic devices and that allows conventional electronic devices to be charged using the battery charging system of the present invention.

BACKGROUND OF THE INVENTION

Portable electronic equipment such as mobile phones, handheld computers, personal data assistants, and devices such as a wireless computer mouse, are normally powered by batteries. In many cases, rechargeable batteries are preferred because of environmental and economical concerns. The most common way to charge rechargeable batteries is to use a conventional charger, which normally consists of an AC-DC power supply (in case of using the ac mains) or a DC-DC power supply (in case of using a car battery). Conventional chargers normally use a cord (an electric cable for a physical electrical connection) to connect the charger circuit (a power supply) to the battery located in the portable electronic equipment. The basic schematic of the conventional battery charger is shown in Fig.1.

PRIOR ART

Inductive electronic chargers without direct physical electrical connection have been developed in some portable electronic equipment such as electric toothbrushes

where because they are designed to be used in the bathroom in the vicinity of sinks and water, it is not safe to provide a conventional electrical connection. US6,356,049, US6301,128, US6,118,249, also all describe various forms of inductive chargers. These inductive type chargers, however, use traditional transformer designs with windings wound around ferrite magnetic cores as shown in Fig.2. The main magnetic flux between the primary winding and secondary winding has to go through the magnetic core materials. Other contactless chargers proposed also use magnetic cores as the main structure for the coupled transformer windings.

A contactless charger using a single primary printed winding without any EMI shielding has been proposed by Choi et al in "A new contactless battery charger for portable telecommunications/computing electronics" ICCE International Conference on Consumer Electronics 2001 Pages 58-59. However, the magnetic flux distribution of a single spiral winding has a major problem of non-uniform magnetic flux distribution. As illustrated further below, the magnitude of the magnetic field in the centre of the core of a spiral winding is highest and decreases from the centre. This means that if the portable electronic device is not placed properly in the central region, the charging effect is not effective in this non-uniform field distribution. Furthermore, without proper EMI shielding, undesirable induced currents may flow in other metallic parts of the portable electronic equipment.

SUMMARY OF THE INVENTION

According to the present invention there is provided a battery charger system comprising a charging module comprising a primary charging circuit and being formed with a planar charging surface adapted to receive an electronic device to be charged, wherein said primary charging circuit includes the primary winding of a transformer,

said primary winding being substantially parallel to said planar charging surface, wherein said primary winding is provided with electromagnetic shielding on the side of said winding opposite from said planar charging surface, and wherein said electronic device is formed with a secondary winding.

In a preferred embodiment the primary winding is formed on a planar printed circuit board.

Preferably the magnetic flux generated by the primary winding is substantially uniform over at least a major part of the planar charging surface. In this way the precise position and orientation of the electronic device on the charging surface is not critical. To achieve this the charging module may comprise a plurality of primary windings, which may preferably be disposed in a regular array.

In a preferred embodiment the primary winding is provided with electromagnetic shielding on the side of said winding opposite from said planar charging surface. This shielding may include a sheet of ferrite material, and more preferably also may further include a sheet of conductive material such as copper or aluminium

It is an advantage of the present invention that in preferred embodiments the planar charging surface may be large enough to receive two or more electronic devices, and the primary charging circuit is adapted to charge two or more devices simultaneously. In this way it is possible to charge more than one device simultaneously. For example the planar charging surface may be divided into a plurality of charging regions, which regions may be defined by providing a plurality of primary transformer windings arranged in a regular array and connecting the windings in groups to define said charging regions. A further advantage of the present invention is that it enables the possibility of allowing a device to move over the charging surface while being charged

at the same time. This possibility is particularly useful to a device which is designed to be moved such as a wireless computer mouse

Viewed from another aspect the present invention provides a battery charging system comprising a charging module comprising a primary charging circuit and being formed with a charging surface for receiving an electronic device to be charged, wherein said charging module comprises a plurality of transformer primary windings arranged in a regular array.

In addition to the battery charging system, the invention also extends to a battery powered portable electronic device comprising a rechargeable battery, and wherein the device includes a planar secondary winding for receiving electrical energy from a battery charger, and electromagnetic shielding between the winding and the major electronic components of said device.

Preferably the shielding comprises a sheet of ferrite material and a sheet of conductive material such as copper.

Preferably the winding is formed integrally with a back cover of said device.

An important aspect of the present invention is that it provides a battery charging system that employs a localised charging concept. In particular, when there is an array of primary coils, it will be understood that energy is only transferred from those primary coils that are adjacent the secondary coil located in the device being charged. In other words, when a device is placed on a planar charging surface that is greater in size than the device, energy is only transferred from that part of the planar charging surface that is directly beneath the device, and possibly also immediately adjacent areas that are still able to couple to the secondary coil.

Viewed from another aspect the present invention provides a battery charging system comprising a primary module and at least one secondary module, said primary

module comprising means for connecting to a mains supply, and at least one primary winding adjacent to a charging surface of said primary module, and wherein said secondary module comprises a secondary winding adjacent to a surface of said secondary module, circuit means for converting alternating current generated in said secondary winding to a regulated DC output, and a charging connector for connection to the charging socket of an electronic device.

According to another aspect the invention also extends to a secondary module for a battery charging system, comprising: a housing having at least one charging surface, a winding provided in said housing adjacent to said surface and adapted to receive magnetic flux when said surface is brought adjacent to a primary winding, circuit means for converting alternating current in said secondary winding to a regulated DC output, and a connector means for connecting said DC output to the charging socket of an electronic device.

BRIEF DESCRIPTION OF THE DRAWINGS

Some embodiments of the invention will now be described by way of example and with reference to the accompanying drawings, in which:-

Fig.1 is a schematic view of a conventional prior art battery charger with direct electrical connection,

Fig.2 is a schematic view of a conventional magnetic core-based transformer as used in prior art inductive battery charger systems,

Fig.3 is a schematic view of a planar transformer with shielding,

Figs.4(a)-(c) are (a) a perspective view of a battery charger system according to an embodiment of the present invention, (b) a view similar to (a) but showing

the structure of the primary charging system, and (c) a view similar to (a) and (b) but showing the top cover removed for clarity,

Figs.5(a) & (b) show the structure of the primary charger with the top cover removed for clarity, and in Fig.5(a) with the structure shown in exploded view,

Figs.6(a) & (b) show (a) a single spiral PCB winding, and (b) the measured magnetic field distribution of a single spiral winding,

Figs.7(a) & (b) illustrate the use of a magnetic core to control magnetic field distribution,

Fig.8 shows an embodiment of the invention in which a plurality of primary windings are arranged in an array structure,

Figs.9(a) & (b) shows (a) a 4 x 4 primary winding array, and (b) the resulting magnetic field distribution,

Figs.10(a)-(c) illustrate an embodiment of the invention in which primary windings are arranged in groups with Fig.10(c) showing the equivalent circuit,

Fig.11 shows an example of the back cover of an electronic device designed to be recharged using an embodiment of the present invention,

Figs.12(a)-(d) show exploded views of the back cover of Fig.11,

Figs.13(a) & (b) show views of a watch that may be recharged in accordance with an embodiment of the invention,

Fig.14 shows a charging module in accordance with an alternative embodiment of the invention,

Fig.15 shows a first layer of a 4x5 winding array for use in a multi-layer embodiment,

Fig.16 shows a second layer of a 3x4 winding array for use in conjunction with the layer of Fig.15 in a multi-layer embodiment,

Fig.17 shows the layers of Fig.15 and Fig.16 in the two-layer structure,

Fig.18 is simplified version of Fig.15,

Fig.19 is a simplified version of Fig.16,

Fig.20 is a simplified version of Fig.17,

Fig.21 is a plot showing the smoothing effect of the two-layer structure,

Fig.22 shows a hexagonal spiral winding,

Fig.23 is a simplified form of Fig.22,

Fig.24 shows a single-layer of hexagonal spiral windings,

Fig.25 shows two adjacent hexagonal spiral windings,

Fig.26 shows the mmf distribution of the adjacent windings of Fig.25,

Fig.27 shows three adjacent hexagonal spiral windings and the peaks and minima of the flux distribution,

Fig.28 shows two overlapped layers of hexagonal spiral windings,

Fig.29 shows the location of the peak flux in the structure of Fig.28,

Fig.30 corresponds to Fig.29 but also shows the location of the flux minima,

Fig.31 shows an embodiment of the invention formed with three overlapped layers,

Fig.32 corresponds to Fig.31 but shows the location of the flux peaks,

Fig.33 is a plot showing the uniformity of the flux distribution along a line,

Fig.34 shows a square spiral winding,

Fig.35 is a simplified version of Fig.34,

Fig.36 shows a first layer of square spiral windings,

Fig.37 corresponds to Fig.36 but shows the location of the flux maxima and minima,

Fig.38 shows two overlapped layers of square spiral windings including the location of the flux maxima and minima,

Fig.39 shows three overlapped layers of square spiral windings including the location of the flux maxima and minima,

Fig.40 shows four overlapped layers of square spiral windings including the location of the flux maxima and minima,

Fig.41 illustrates a battery charging system according to a further embodiment of the invention,

Fig.42 is a view similar to Fig.41 but part broken away to show the primary winding,

Fig.43 is a view similar to Fig.42 but of an alternate embodiment,

Figs.44(a) and (b) illustrate possible magnetic cores for use in the embodiment of Fig.42,

Fig.45 shows an equivalent circuit for the charging system of an embodiment of the invention,

Fig.46 illustrates an example of a secondary module for use in an embodiment of the invention,

Fig.47 shows a part broken away view of secondary module of an embodiment of the invention,

Fig.48 is a view similar to Fig.47 but of a further embodiment,

Fig.49 is a view showing the complete charging system according to an embodiment of the invention,

Fig.50 is a view similar to Fig.49 but showing how the charging system according to an embodiment of the invention can be used to charge multiple devices having different forms of charging connections, and

Fig.51 is a view illustrating how an embodiment of the present invention can be used to enable a conventional electronic device to be charged using an inductive charging platform as shown in Fig.4.

DETAILED DESCRIPTION OF PREFERRED EMBODIMENTS

The present invention will now be described in respect of a preferred embodiment in the form of an inductive battery charger for portable electronic equipment such as mobile phones, handheld computers and personal digital assistants (PDA), and devices such as a wireless computer mouse.

Referring firstly to Fig.4, the inductive charger system comprises two modules, a power delivering charger module that contains the primary circuit of a planar isolation transformer and a secondary circuit that is located in the portable electronic equipment to be charged. In this embodiment of the invention, the charger circuit is located within a housing 1 that is formed with a flat charging surface 2. The secondary circuit is formed in the portable equipment to be charged (in this example a mobile phone 3) and the equipment is formed with at least one planar surface. As will be seen from the following description the equipment is charged simply by placing the equipment on the surface so that the planar surface on the equipment is brought into contact with the flat charging surface 2. It is a particularly preferred aspect of the present invention that the equipment to be charged does not have to be positioned on the charging surface in any special orientation. Furthermore, in preferred embodiments of the invention two or more mobile devices may be charged simultaneously on the same charging surface, and/or a device that is designed to be moved (such as a wireless computer mouse) can be charged while being moved over the charging surface (which could be integrated into a computer mouse pad). It will also be seen from the following description that the energy

transfer is "localised" in the sense that energy is only transferred from the charging surface to the device from that part of the charging surface that is directly beneath the device (and possibly to a lesser extent regions adjacent thereto).

Referring in particular to Fig.4(b) the primary charging module comprises a printed circuit board 4 formed with at least one spiral conductive track formed thereon as a primary winding. It will be understood, however, that the primary winding need not necessarily be formed on a PCB and could be formed separately. Alternatively, multiple PCBs each formed with at least one winding could be "stacked" on top of each other to increase the total flux. Preferably, as will be described further below, there are in fact a plurality of such spiral tracks disposed in an array as shown in Fig.4(c) in which a top insulating sheet has been removed for clarity. Beneath the PCB 4 (ie the side of the PCB away from the charging surface) is provided EMI shielding comprising firstly a ferrite sheet 5 adjacent the PCB 4, and then a conductive sheet 6 which in this example may be a copper sheet. Beneath the copper sheet 6 may be provided any suitable form of substrate material 7, eg a plastics material. Above the PCB 4 may be provided a sheet of insulating material 8 which forms the charging surface. Preferably the PCB 4, the EMI shielding sheets 5,6, the substrate 7 and the insulating cover sheet 8 may also be generally the same size and shape, for example rectangular, so as to form the primary charging module with the charging surface being large enough to accommodate at least one, and more preferably two or more, devices to be charged. Figs.5(a) and (b) also show the structure of the charging module without the cover sheet and without any devices to be charged thereon for the sake of clarity.

As shown in Fig.4, the primary transformer circuit module transmits electrical energy at high frequency through a flat charging surface that contains the primary transformer windings. The secondary winding is also planar and is located in the

portable electronic equipment and couples this energy, and a rectifier within the portable equipment rectifies the high-frequency secondary AC voltage into a DC voltage for charging the battery inside the portable equipment either directly or via a charging circuit. The rectified DC voltage is applied to the battery via mechanical contacts provided in an integrated back cover as will be described further below. No physical electrical connection between the primary charger circuit and the portable electronic equipment is needed.

The primary charger circuit has (1) a switched mode power electronic circuit, (2) the primary side of a planar transformer that consists of a group of primary windings connected in series or in parallel or a combination of both, (3) an EMI shield and (4) a flat interface surface on which one or more portable electronic devices can be placed and charged simultaneously. The schematic of the primary charger system is shown in Fig.5(a) and (b) without the insulating cover.

The battery charging system can be powered by AC or DC power sources. If the power supply is the AC mains, the switched mode power electronic circuit should perform a low-frequency (50 or 60Hz) AC to DC power conversion and then DC to high-frequency (typically in the range from 20kHz to 10MHz) AC power conversion. This high-frequency AC voltage will feed the primary planar windings of the primary charger circuit. If the power supply is a battery (e.g. a car battery), the switched mode power supply should perform a DC to high-frequency AC power conversion. The high-frequency voltage is fed to the primary windings of the planar transformer.

Preferably, the charger should be able to charge one or more than one items of portable electronic equipment at the same time. In order to achieve such a function, the AC magnetic flux experienced by each item of portable equipment placed on the charging surface should be as even as possible. A standard planar spiral winding as

shown in Fig.6(a) is not suitable to meet this requirement because its flux distribution is not uniform as shown in Fig.6(b) when the winding is excited by an AC power source. The reason for such non-uniform magnetic flux distribution is that the number of turns in the central region of the single spiral winding is largest. As the magnitude of the magnetic flux and the magnetomotive force (mmf) is proportional to the product of the number of turn and the current in the winding, the magnetic flux is highest in the centre of the winding.

One method to ensure uniform magnetic flux or mmf distribution is to use a concentric primary winding with a planar magnetic core as shown in Fig.7(a). This magnetic core-based approach allows the magnetic flux to concentrate inside the core and typical magnetic flux distribution is shown in Fig.7(b). In general, the flat charging interface surface of the primary charger should be larger than the total area of the portable electronic equipment.

In order to ensure that more than one item of portable electronic equipment can be placed on the flat charging surface and charged simultaneously, a second and more preferred method proposed is to ensure that the magnetic flux distribution experienced by each items of portable electronic equipment is as uniform as possible. This method can be realized by using a "distributed" primary planar transformer winding array structure as shown in Fig.8. This planar winding array consists of many printed spiral windings formed on the PCB. These printed spiral windings can be hexagonal, circular, square or rectangular spirals, and can be connected in series, in parallel or a combination of both to the high-frequency AC voltage generated in the power supply in the primary charger circuit. The array should comprises relatively closely spaced coils so as to be able to generate the required near-uniform magnetic flux distribution, as an array of widely spaced apart coils may not generate such a near-uniform field.

Fig.9(a) shows a practical example with the transformer winding array connected in series so that all the fluxes created in the windings point to the same direction. Fig.9(b) show the measured flux distribution of one planar transformer when the windings in the transformer array are connected in series. This measurement confirms the near uniform magnetic flux distribution of the array structure. Comparison of Fig.6(b) and Fig.9(b) confirms the improvement of the uniform magnetic field distribution using the transformer array structure. In addition, this transformer array structure provides for the possibility of multiple primary transformer windings being provided for localized charging as will now be explained.

The primary transformer windings can also take the form of a combination of series and parallel connections if desired. Such an arrangement allows the charging surface to be divided into various charging regions to cater for different sizes of the secondary windings inside the portable electronic equipment. Fig.10(a) illustrates this localized charging zone principle. Assume that the transformer array is divided into 4 zones (A, B, C, and D). The transformer windings within each zone are connected in series to form one primary winding group with the distributed magnetic flux feature. There will be four primary windings in the equivalent circuit as shown in Fig.10(c). If the portable electronic equipment is placed on Zones A and B as shown in Fig.10(b), the equivalent electrical circuit is shown in Fig.10(c). Only the parallel primary transformer winding groups for Zones A and B are loaded because they can sense a nearby secondary winding circuit in the portable electronic equipment. Therefore, they will generate magnetic flux in Zones A and B. Primary transformer windings C and D are not loaded because they have no secondary transformer circuit close to them and their equivalent secondary circuits are simply an open-circuit (Fig.10(c)). As a result, power transfer between the primary charger circuit and the secondary windings inside the

portable electronic equipment takes place basically through the coupled regions (areas) of the charging interface surface covered by the portable electronic equipment. The non-covered area of the charging surface will transfer virtually no energy. This special design avoids unnecessary electromagnetic interference. A further advantage of this localised energy transfer concept, is that it enables a movable device (such as a wireless computer mouse) to be continually charged as it moves over the charging surface. In the case of a wireless computer mouse, for example, the primary charging circuit could be integrated into a mousepad and the mouse may be charged as it rests on and/or moves over the mousepad.

The back cover of the portable electronic equipment is a detachable back cover shown in Fig.12(a) that covers the battery and which may be removed when the battery is replaced. In preferred embodiments of the present invention, this back cover has a built-in secondary planar transformer winding 10, a diode rectifier circuit 13 and preferably a thin EMI shield 11,12 as shown in Fig.12(b) & (c). When the back cover side of the portable equipment is placed near the flat charging surface of the primary charger circuit, this secondary winding couples the energy from the nearby primary transformer winding or windings. The rectifier circuit rectifies the coupled AC voltage into a DC voltage for charging the battery through mechanical contacts 14. This rectifier circuit also prevents the battery from discharging into the secondary winding. In order to avoid induced circuit from circulating in other metal parts inside portable electronic circuit, it is preferable to include a thin EMI shield as part of the integrated back cover structure as shown in Fig.12. This EMI shield can be a thin piece of ferrite material (such as a flexible ferrite sheet developed by Siemens) or ferrite sheets, or more preferably a combination of a ferrite sheet 11 and then a thin sheet 12 of copper of another conductive material such as aluminium..

It will thus be seen that, at least in its preferred forms, the present invention provides a new planar inductive battery charger for portable electronic equipment such as mobile phones, handheld computers, personal data assistant (PDA) and electronic watches, and wireless computer mice. The inductive charger system consists of two modules, including (1) a power delivering charger circuit that contains the primary circuit of a planar isolation transformer and a flat charging surface and (2) a separate secondary transformer circuit that consists of a printed winding, a rectifier and preferably a thin EMI shield and which is located in the portable electronic equipment to be charged.

An advantage of the present invention, at least in preferred forms, is that the primary charger circuit system has the primary side of a planar transformer and a flat interface surface on which one or more portable electronic devices can be placed and charged simultaneously. The secondary circuit can be integrated into the back cover of the portable electronic device or separately placed inside the electronic device. The invention also extends to a back cover design with an in-built secondary circuit for the portable equipment. The secondary winding of the planar transformer can be EMI shielded and integrated into the back cover adjacent to the battery in the portable electronic device. As long as the back cover sides of the portable electronic device are placed on the charger surface, one or more portable electronic devices can be charged simultaneously, regardless of their orientations.

Figs.13(a) and (b) show how an embodiment of the invention may be used to recharge a watch battery. A watch is formed with a basic watch mechanism 20, which is powered by a rechargeable battery 21. The watch mechanism is shielded from electrical interference in the charging process by an EMI shield consisting of, for example, a copper sheet 22 and a ferrite sheet 23 (with the copper sheet closer to the watch

mechanism than the ferrite sheet). The other side of the EMI shield is provided a planar coreless transformer secondary winding 24 formed with electrical contacts 26 for connection to the battery 21 and with a rectifier circuit to prevent discharge of the battery. Finally, the watch structure is completed by the provision of a planar back cover 25 formed of non-metallic material. It will be understood that the watch battery may be recharged by placing the watch on the charging surface of a battery charging system as described in the above embodiments such that the back cover 25 lies flat on the planar charging surface. Electrical energy is then coupled from the primary winding(s) in the battery charging module to the secondary winding in the watch and then to the rechargeable battery.

In the embodiments described above the charging module is formed as a single integral unit (as shown for example in Figs.4 and 5). However, in some situations it may be desirable to separate the electronic charging circuit from the planar charging surface. This possibility is shown in Fig.14 in which the electronic charging circuit 30 is connected by a cable 31 to the charging surface 32. The charging surface 32 includes an insulating top cover, the planar primary windings printed on a PCB, and a bottom EMI shield formed of ferrite and a conductive sheet such as copper. This embodiment has the advantage that the charging surface is relatively thin, and therefore may be useful for example when the device to be charged is a wireless computer mouse because the charging surface can double as a mousepad as well as a charging surface.

In the embodiments described above a single layer of transformer arrays is provided. However, in order to generate a more uniform magnetic field distribution, multi-layer transformer arrays can be used. The following embodiments describe how multiple layers of transformer arrays may be used that can provide a very uniform magnetic field distribution on the charging surface.

Fig.15 shows a 4x5 primary planar transformer winding array which consists of square-sprial winding patterns. This can be fabricated on one layer of the printed circuit board structure. It should be noted that, for an individual winding pattern in the array, the magnitude of the magnetic flux is highest in the center of the spiral winding. The magnitude of the magnetic flux is smallest in the small gap between adjacent winding patterns.

A second layer with a 3x4 transformer winding array is shown in Fig.16. The individual winding patterns in both layers are identical. As shown in Fig.17, by having the two layers of arrays arranged in such a manner that the center (region of maximum magnetic flux magnitude) of a winding pattern on one layer is placed on the gap (region of minimum magnetic flux magnitude) between adjacent winding patterns on the other layer, the variation of the magnetic field magnitude can be minimized and the magnetic flux magnitude can therefore be made as even as possible over the overlapped surface. The essence of the multi-layer transformer arrays is to have a displacement between the individual winding patterns of the two layers so that the regions of the maximum magnetic field magnitude of one layer is "evened out" by the regions of the minimum magnetic field magnitude.

In order to examine the 'uniform magnetic field magnitude' feature of the proposed overlapped multi-layer transformer arrays, this 'magnitude smoothing' concept is illustrated in simplified diagrams in Fig.18 to 20. Fig.18 is a simplified version of Fig.15. Each solid square in Fig.18 represents a square-spiral winding pattern in the first layer (Fig.15). Fig.19 is a simplified version of the Fig.16. Each dotted square represents a square-spiral winding pattern in the second layer (Fig.16). The simplified version of the multi-layer array structure is shown in Fig.20. From Fig.20, it can be seen that the overlapped array structure (with correct displacement between the

two layers) divides each square-spiral winding pattern into four smaller sub-regions. The important feature is that the four sub-regions are identical in terms of winding structure. Despite that fact that the distribution of the magnetic field magnitude on the surface of each individual square-spiral winding is not uniform, the distribution of the resultant magnitude field magnitude on the surface of each sub-region is more or less identical because of the overlapped multi-layer winding structure. The concept of the generating uniform magnetic field magnitude over the charging surface is illustrated in Fig.21.

In this example, a multi-layer transformer winding array structure that can provide a uniform magnetic field magnitude distribution is described. This example is based on square-spiral winding patterns. In principle, winding patterns of other shapes can also be applied as long as the resultant magnetic field magnitude distribution is as uniform as possible.

The use of two layers of transformer arrays can reduce the variation in the magnetic flux over the charging surface. However, there may still be some variations and the use of a three or four layer structure may provide a still more uniform flux distribution as described in the following embodiments.

The following embodiment is a structure comprising three layers of planar winding arrays. This PCB winding structure can generate magnetomotive force (*mmf*) of substantially even magnitude over the charging surface. Each winding array consists of a plurality spiral windings each of which are of an hexagonal shape. A spiral winding arranged in a hexagonal shape is shown in Fig.22. For simplicity, it will be represented as a hexagon as shown in Fig.23. A plurality of hexagonal spiral windings can be arranged as an array as shown in Fig.24. These windings can be connected in parallel, in series or a combination of both to the electronic driving circuit. If a current passes

through each spiral winding pattern, a magnetomotive force (*mmf*), which is equal to the product of the number of turns (*N*) and current (*I*) (i.e. *NI*), is generated. Fig.25 shows two spiral winding patterns adjacent to each other and the per-unit *mmf* plot over the distance (dotted line) can be linearized as shown in Fig.26. It can be seen that the *mmf* distribution over the distance is not uniform. The maximum *mmf* occurs in the center of the hexagonal pattern and the minimum *mmf* occurs in the edge of the pattern.

Fig.27 shows three adjacent windings. The maximum *mmf* region is labelled by a symbol 'P' (which stands for Peak *mmf*). The minimum *mmf* region at the junction of two patterns is labeled as 'V' (which stands for Valley of the *mmf* distribution). In order to generate a uniform *mmf* distribution over the planar charging surface, two more layers of PCB winding arrays should be added. This principle is explained firstly by adding a second layer of PCB winding array to the first one as shown in Fig.28. The second layer is placed on the first one in such a way that the peak *mmf* positions (P) of the patterns of one layer are placed directly over the valley positions (V) of the patterns in the other layer. Fig.29 highlights the peak positions of the patterns that are directly over the valley positions of the other layer for the two overlapped PCB layers in Fig.28.

It can be observed from Fig.29, however, that the use of two layers of PCB winding arrays, while presenting an improvement over a single layer, does not offer the optimal solution for generating uniform *mmf* over the inductive charging surface. For each hexagonal pattern in the 2-layer structure, the peak positions occupy the central position and three (out of six) vertices of each hexagon. The remaining three vertices are valley positions (V) that need to be filled by a third layer of PCB winding arrays. These valley positions are shown in Fig.30 as empty squares.

Careful examination of Fig.30 shows that there are six peak positions (P) surrounding each valley position. Therefore, a third layer of a hexagonal PCB winding

array can be used to fill up all these remaining valley positions. By placing the central positions (peak *mmf* positions) of the hexagonal winding patterns of the third layer of the PCB winding array over the remaining valley positions of the two-layer structure, an optimal three-layer structure is formed as shown in Fig.31. Fig.32 highlights the peak *mmf* positions of the three-layer structure. It can be observed that all central positions and vertices of all hexagonal patterns have peak *mmf*.

In order to confirm that the *mmf* over the surface has uniform *mmf* distribution, any distance between any two adjacent peak *mmf* positions can be considered as illustrated in Fig.33. If the winding patterns are excited in the same manner and polarity so that the *mmf* generated by each layer of the winding array are always in the same direction at any moment, the resultant *mmf* is simply the sum of the *mmf* generated by each layer. The dotted line in Fig.33 shows that the resultant *mmf* over the distance between any two adjacent peak positions in Fig.33 is equal to 1.0 per unit. This confirms that the proposed three-layer PCB winding array structure can be used to generate highly uniform *mmf* over the inductive charging surface. When used as a contactless, inductive charging surface, this uniform *mmf* distribution feature ensures that, for a given airgap, a secondary PCB coupling winding can always couple the same amount of magnetic flux regardless of the position of the secondary (coupling) PCB on the inductive charging surface. In addition, the voltage induced in the secondary winding would be the same over the inductive charging surface.

In another embodiment, the three-layer PCB winding array structure can be constructed as a four-layer PCB, with one of the four layers accommodating the return paths of the spiral windings to the electronic driving circuit.

A further embodiment is based again on square spiral winding patterns. In this embodiment four layers of square-spiral winding arrays are used to generate highly

uniform *mmf* over the PCB surface. As in the hexagonal embodiment described above, for convenience of illustration each square-spiral winding pattern (Fig.34) is simplified as a square symbol (Fig.35) in the following description.

Fig.36 shows the first layer of the square-spiral PCB winding array. The *mmf* in the central region of each square pattern is highest. These regions are highlighted as 'Peak' or (P) in Fig.37. The regions of the minimum *mmf* (i.e. the valleys) occurs along the edges of the square patterns. These regions are highlighted with dots (•) in Fig.37.

In order to reduce the *mmf* ripples on the surface, the peak (P) positions of a second layer of square-spiral PCB winding array can placed over some of the valley positions (•) as shown in Fig.38. When a third layer of square-spiral PCB winding array is added to the structure in Fig.38, the resultant layout is shown in Fig.39. It can now be observed that one more layer of the square-spiral PCB windings is needed to fill up all the valleys with peaks as shown in Fig.40.

The inductive battery charging platform described above, which can be regarded as the primary circuit of a transformer system (or the primary inductive charging system), can be used as a standard battery charging platform for portable electronic equipment with compatible inbuilt secondary circuitry in the electronic equipment to be charged. However, existing electronic equipment that is not designed for compatibility with the abovedescribed battery charging platform cannot take advantage of the convenience offered by the battery charging platform. Another embodiment of the present invention therefore provides both a battery charging system that can stand independently and can be used to charge existing conventional devices, and a means by which a conventional electronic device can be charged using the charging platform described above.

Referring firstly to Fig.41 there is shown therein a perspective view of a part of a battery charging system according to an embodiment of the present invention. The part of the charging system shown in Fig.41 may be termed the primary inductive charging system since as will be explained below it comprises at least one primary winding. The part of the battery charging system shown in Fig.41 may also be considered to be an extension system since in preferred forms it may be adapted to charge multiple devices and is therefore analogous to a conventional extension lead that allows multiple items of electronic equipment to share the same power socket.

The charging system is provided with multiple charging slots 100,101,102 for receiving secondary charging modules to be described further below. As will be explained further below each charging slot is provided with a primary winding. Fig.41 shows a schematic of the primary inductive charging extension system with three charging slots. However, it should be noted that the number of slots is not restricted to three and can be as few as a single charging slot, or can be more than three. It will be understood that the number of charging slots dictate the number of devices that can be charged simultaneously. The primary charging extension system is connected to the mains through a plug 103 and includes a power electronic circuit 104 that provides a high-frequency (typically in the range of 1kHz to 2MHz) AC voltage to the primary windings that are located under the charging slot surfaces. It should be noted that the surfaces of the slots are flat and the slots are separated from each other by dividing walls. Each slot is therefore the same size as the surface of a housing of a secondary module to be described below, and the separating walls and mechanical switches to be described below together act to engage a secondary module and hold it in a correct orientation for efficient charging.

Each primary winding can be a coil 105 as shown in Fig.42 or a printed-circuit-board (PCB) winding 106 as shown in Fig.43. If the primary winding is a coil 105, the coil 105 is preferably accommodated in a space 107 defined by a magnetic structure 108 such as the two examples shown in Fig.44(a) and (b) in which the coil is wound around a magnetic core 108. If a PCB winding is used, appropriate electromagnetic (EM) shielding, such as the combined use of ferrite and copper sheets described in US 6501364, can be placed under the PCB winding in order to ensure that the magnetic flux generated in the PCB winding will not penetrate through the base of the primary inductive charging extension system. Preferably, mechanical switches 109 can be provided in each charging slot that when closed activate the primary winding to the high-frequency AC voltage source when the secondary charging module (to be described below) is inserted in that particular slot. As discussed above, the mechanical switches may also serve to engage and hold the secondary module in place. This mechanism ensures that only windings in the slots used by the secondary modules are excited by the high-frequency AC voltage source. The equivalent circuit is shown in Fig.45.

It will also be understood that the primary winding could be constructed as a multiple layer structure as discussed above in order to provide a particularly preferred even flux distribution over the charging surface.

Fig.46 shows a typical secondary charging module 200 for use with the primary charging extension system shown in Fig.41. Each secondary module has a conventional cable 201 and charger connecter 202 that is adapted to be received within the charging socket of a conventional electronic device. It will be understood that different secondary charging modules 200 may be provided differing only by the type of the connector 202. Each secondary charging module 200 is provided with a housing 203 that contains a

secondary circuit to be described below. The housing is preferably rectangular (but of course could be any suitable shape) and of such a size that it may be received in one of the slots 100-102 of the primary charging extension system. The housing 203 should have at least one preferably flat surface for placing on the charging slot of the primary charging extension system. This flat surface is preferably parallel to the plane of the secondary winding within the housing such that when the secondary module is placed in a slot of the primary extension system the secondary winding is substantially parallel to the primary winding beneath the surface of the slot. The housing 203 of the secondary module should preferably be made of non-conductive and non-ferromagnetic material so that no current will be induced in the housing material.

As can be seen from Figs.47 and 48 inside each secondary charging module 200 are at least one secondary winding 204 and charger circuitry 205 that receives the induced AC voltage in the secondary winding and provides a regulated DC output voltage for the charging purpose. The secondary winding should be kept inside the housing. The secondary winding can be a coil (Fig.47) or it can be printed on a PCB (Fig.48). The function of the secondary winding is to act as the secondary winding of a transformer system to pick up the changing magnetic flux generated by the primary winding of the primary charging extension system.

The secondary coil or PCB winding should be placed close to the (preferably flat) surface of the housing of the secondary charging module so as to pick up maximum changing AC magnetic flux from the primary inductive charging extension system or platform. According to Faraday's Law, an AC voltage will be induced across the secondary winding if the secondary winding senses a changing magnetic flux (that can be generated by the primary winding in the primary inductive charging system).

The terminals of the secondary winding are connected to the input terminals of an electronic circuit 205 that (1) performs the AC-DC power conversion function (i.e. rectifying the AC voltage into DC) and (2) preferably also regulate the DC voltage to a desired value (typically in the range from 3V to 24V) within a certain tolerance. Through a cable and a charger connector for connecting to charging socket in the portable equipment, this DC voltage can be used to charge the portable equipment a shown in Fig.49.

The secondary winding design (such as number of turns and dimensions of windings), the DC regulated voltage level and the type of connector can be designed according to the charging requirements of specific electronic products. Therefore, different secondary charging modules can be designed for different ranges of products, but all secondary modules are compatible with the same primary charging extension system as shown in Fig.50 in which two different types of secondary modules adapted for charging different devices and having different connectors 202,202' are shown in adjacent slots of the primary charging extension system. As the primary inductive charging extension system preferably has several charging slots for accommodating the secondary charging modules, it can be used to charge several items of conventional portable electronic equipment simultaneously.

A further advantage of the secondary charging module is that it allows a conventional electronic device to be charged using the inductive battery charging platform described above. Although a conventional electronic device cannot be charged by placing it directly on the charging platform surface because it does not have the in-built secondary winding, instead a secondary charging module can be placed in the inductive charging system and charge the conventional device therefrom as shown in Fig.51

In principle, the housing of the secondary charging module can have more than one preferably flat interface surface. If the housing is a cuboid it will have two large opposed interface surfaces (eg upper and lower surfaces of a relatively thin flat cuboid structure a shown in the Figures) and with this cuboid design, either interface surface of the secondary module housing can be placed on the charging slots of the primary inductive charging extension system or other charging platform. This cuboid design makes the secondary charging modules very user-friendly because it does not matter which way up the housing of the secondary module is placed on the primary charging surface.

In summary, a preferred embodiment of the secondary charging module consists of

(i) a non-conductive housing that has at least one surface (and preferably two surfaces) for placing on the charging slot of the primary charging extension system or the charging platform and that accommodates the secondary winding and circuitry for charging the electronic equipment,

(ii) A secondary winding, that can either be printed in a printed-circuit-board (PCB) or a conductor coil,

(iii) an AC-DC power conversion circuit that converts the ac induced voltage picked by the secondary winding from the primary AC voltage excitation into a regulated or unregulated DC voltage, typically in the range from 3V to 24V,

(iv) a conventional cable that connects the DC voltage output of the secondary circuitry to a connector that is compatible with the charging socket in the conventional electronic equipment.

It will thus be seen that, at least in preferred forms, the charging system of the present invention including the proposed secondary charging modules offers users a

convenient and user-friendly battery charging system for a wide range of portable electronic equipment. Using the appropriate charger connectors that are compatible with different portable equipment, the proposed charging system enables one single charging system (that occupies only one power point or socket in the ac mains) to charge a wide range of electronic equipment.

The present invention, at least in preferred forms, provides a new charging system allows more than one piece of equipment to be charged simultaneously, and regardless of their orientations on the charging surface, and allows a movable device to be charged while it moves over the charging surface.

CLAIMS

1. A battery charger system comprising a charging module comprising a primary charging circuit and being formed with a planar charging surface adapted to receive an electronic device to be charged, wherein said primary charging circuit includes the primary winding of a transformer, said primary winding being substantially parallel to said planar charging surface, wherein said primary winding is provided with electromagnetic shielding on the side of said winding opposite from said planar charging surface, and wherein said electronic device is formed with a secondary winding.

2. A battery charger system as claimed in claim 1 wherein said transformer primary winding is formed on a printed circuit board.

3. A battery charging system as claimed in claim 1 wherein the magnetic flux generated by said primary winding is substantially uniform over at least a major part of said planar charging surface.

4. A battery charging system as claimed in claim 1 wherein said charging module comprises a plurality of primary windings.

5. A battery charging system as claimed in claim 4 wherein said primary windings are disposed in a regular array.

6. A battery charging system as claimed in claim 4 wherein said primary windings are formed in a multi-layer structure comprising at least two layers and with each said layer including an array of primary windings.

7. A battery charging system as claimed in claim 6 wherein the array of a first said layer is offset relative to the array of a second said layer whereby regions of said first layer generating maximum magnetic flux coincide with regions of said second layer that generate minimum magnetic flux.

8. A battery charging system as claimed in claim 6 comprising three layers of hexagonal windings.

9. A battery charging system as claimed in claim 6 comprising four layers of square windings.

10. A battery charging system as claimed in claim 5 wherein said primary windings are hexagonal, circular, rectangular, square or polygonal in shape.

11. A battery charger system as claimed in claim 1 wherein said shielding includes a sheet of ferrite material.

12. A battery charging system as claimed in claim 11 wherein said shielding further includes a second sheet of conductive material.

13. A battery charging system as claimed in claim 1 wherein said planar charging surface is large enough to receive two or more electronic devices, and wherein said primary charging circuit is adapted to charge two or more devices simultaneously.

14. A battery charging system as claimed in claim13 wherein said planar charging surface is divided into a plurality of charging regions.

15. A battery charging system as claimed in claim 14 wherein said primary charging circuit comprises a plurality of primary transformer windings arranged in a regular array and wherein said windings are connected in groups to define said charging regions.

16. A battery charging system as claimed in claim 1 wherein said primary charging circuit comprises an array of primary windings, and wherein when a device is placed on said charging surface charging energy is transferred to said device from only those primary windings closely adjacent to said device.

17. A battery charging system as claimed in claim 1 wherein said planar charging surface is large enough to enable a said device to be moved over said charging surface while being charged.

18. A charging module for a battery charging system, said module comprising a primary charging circuit and being formed with a charging surface for receiving

an electronic device to be charged, wherein said charging module comprises a plurality of transformer primary windings arranged in a regular array.

19. A charging module as claimed in claim 18 wherein when an electronic device to be charged is placed on said charging surface charging energy is transferred to said device from only those primary windings closely adjacent to said device.

20. A charging module as claimed in claim 18 wherein said transformer primary windings are connected to each other in series and/or in parallel.

21. A charging module as claimed in claim 18 wherein said primary transformer windings are planar and substantially parallel to a planar charging surface.

22. A charging module as claimed in claim 21 wherein said primary windings are formed in at least two planes, each said plane including an array of said windings.

23. A charging module as claimed in claim 22 wherein the array of a first said plane is offset relative to the array of a second said plane whereby regions of said first array that generate maximum magnetic flux coincide with regions of said second array that generate minimum magnetic flux.

24. A charging module as claimed in claim 22 comprising three layers of hexagonal windings.

25. A charging module as claimed in claim 22 comprising four layers of square windings.

26. A charging module as claimed in claim 21 wherein said primary windings are formed on a printed circuit board.

27. A charging module as claimed in claim 21 wherein electromagnetic shielding is provided on the side of said primary windings opposite from said planar charging surface.

28. A charging module as claimed in claim 27 wherein said shielding comprises a sheet of ferrite material.

29. A charging module as claimed in claim 28 wherein said shielding further comprises a second sheet of conductive material.

30. A charging module as claimed in claim 18 wherein said charging surface is large enough to allow two or more devices to be charged thereon simultaneously.

31. A charging module as claimed in claim 18 wherein said charging surface is large enough to allow a device to be moved over the charging surface while being charged.

32. A battery powered portable electronic device comprising a rechargeable battery, and wherein said device includes a planar secondary winding for receiving

electrical energy from a battery charger, and electromagnetic shielding between said winding and the major electronic components of said device.

33. An electronic device as claimed in claim 32 wherein said shielding comprises a sheet of ferrite material and a sheet of conductive material.

34. An electronic device as claimed in claim 32 wherein said winding is formed integrally with a back cover of said device.

35. A battery charging system comprising a primary module and at least one secondary module, said primary module comprising means for connecting to a mains supply, and at least one primary winding adjacent a charging surface of said primary module, and wherein said secondary module comprises a secondary winding adjacent a surface of said secondary module, circuit means for converting alternating current generated in said secondary winding to a regulated DC output, and a charging connector for connection to the charging socket of an electronic device.

36. A battery charging system as claimed in claim 35 wherein said primary charging module comprises a plurality of primary windings each associated with a respective charging surface whereby said primary charging module is able to receive a plurality of secondary charging modules simultaneously.

37. A battery charging system as claimed in claim 36 wherein said charging surfaces are provided with engagement means for engaging a secondary module.

38. A battery charging system as claimed in claim 37 wherein said engagement means include a mechanical switch whereby power is supplied to said primary winding only when a secondary module is engaged by a charging surface.

39. A battery charging system as claimed in claim 35 wherein said primary winding is formed by a coil.

40. A battery charging system as claimed in claim 39 wherein said coil is wound on a magnetic structure.

41. A battery charging system as claimed in claim 39 wherein said coil is parallel to said charging surface.

42. A battery charging system as claimed in claim 35 wherein said primary winding is printed in a printed circuit board.

43. A battery charging system as claimed in claim 42 wherein said printed circuit board is parallel to said charging surface.

44. A battery charging system as claimed in claim 35 wherein said secondary winding is formed by a coil.

45. A battery charging system as claimed in claim 44 wherein said coil is parallel to said charging surface.

46. A battery charging system as claimed in claim 1 wherein said secondary winding is printed on a printed circuit board.

47. A battery charging system as claimed in claim 46 wherein said printed circuit board is parallel to said charging surface.

48. A secondary module for a battery charging system, comprising: a housing having at least one charging surface, a winding provided in said housing adjacent to said surface and adapted to receive magnetic flux when said surface is brought adjacent to a primary winding, circuit means for converting alternating current in said secondary winding to a regulated DC output, and a connector means for connecting said DC output to the charging socket of an electronic device.

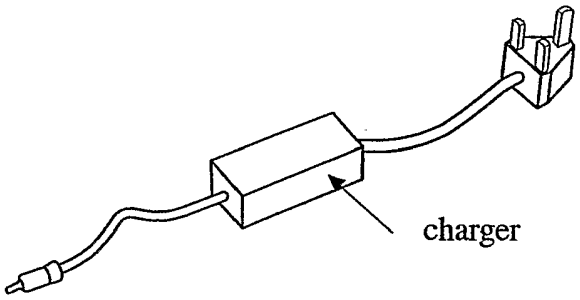

FIG.1 (PRIOR ART)

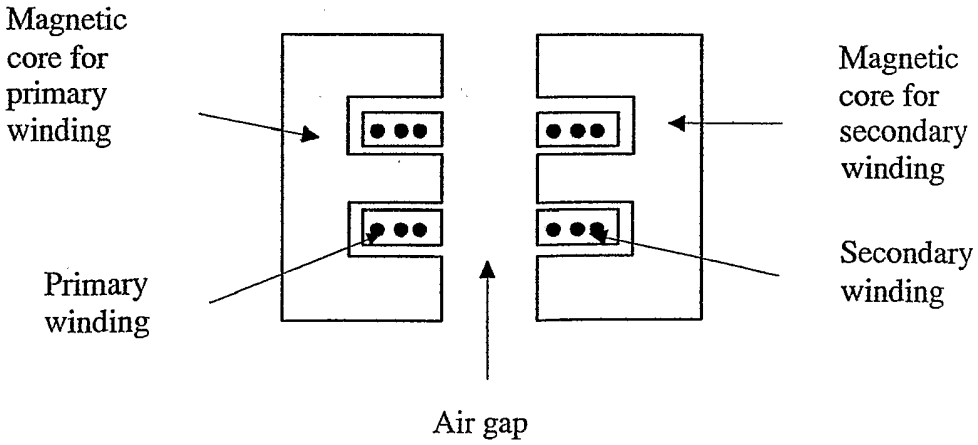

FIG.2 (PRIOR ART)

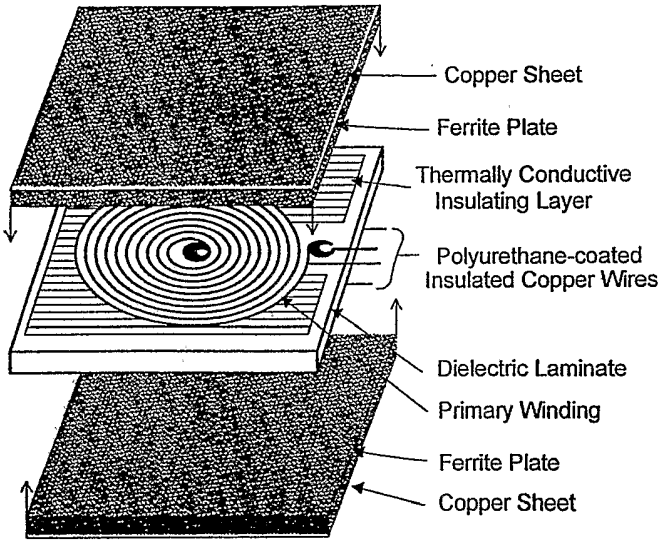

FIG.3 (PRIOR ART)

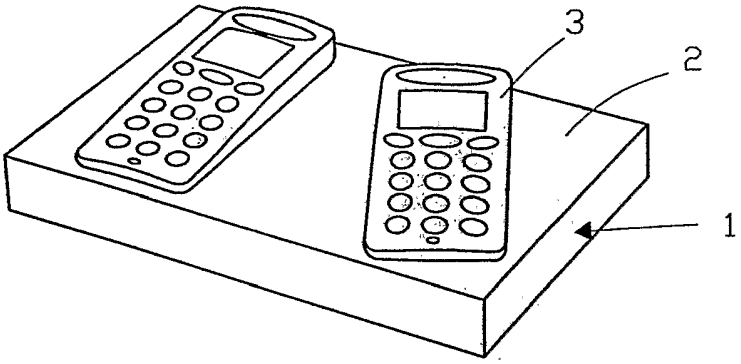

FIG.4(a)

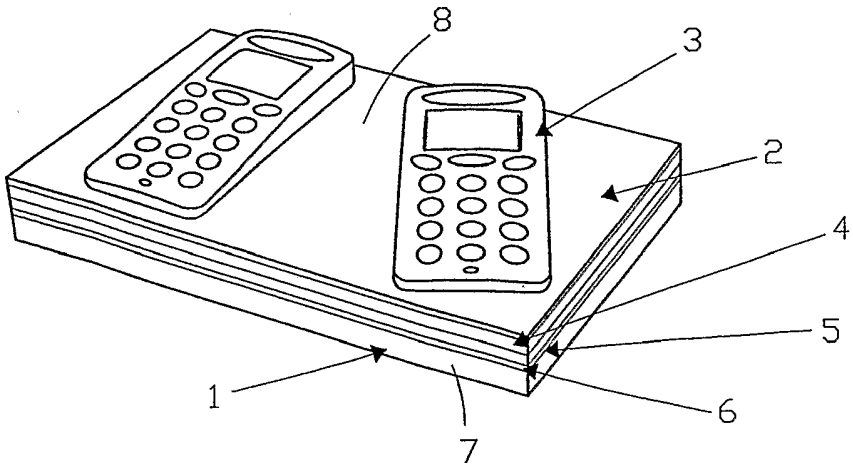

FIG.4(b)

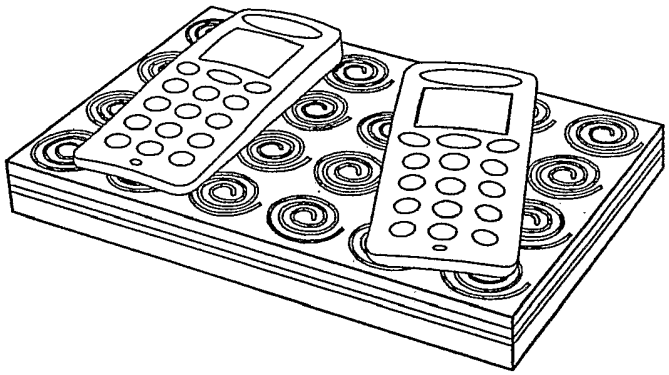

FIG.4(c)

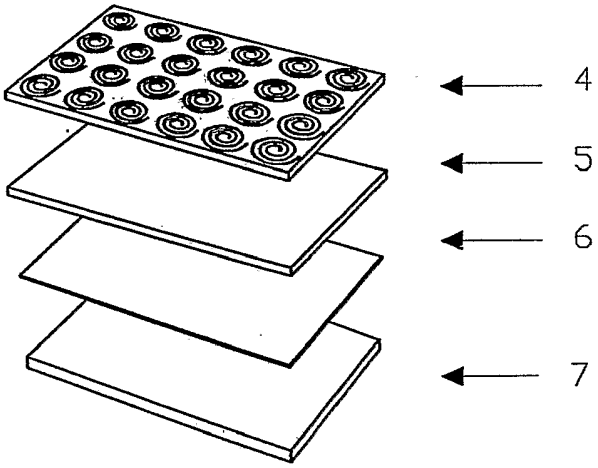

FIG.5(a)

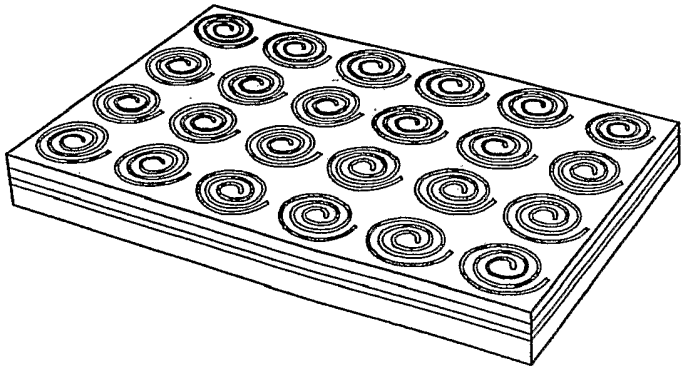

FIG.5(b)

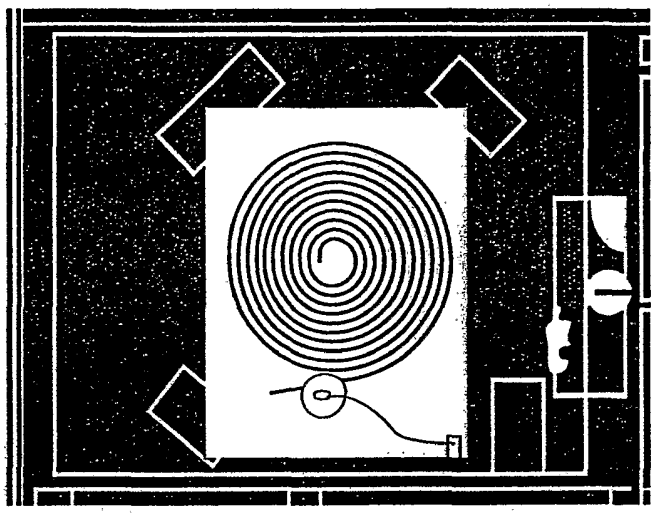

FIG.6(a)

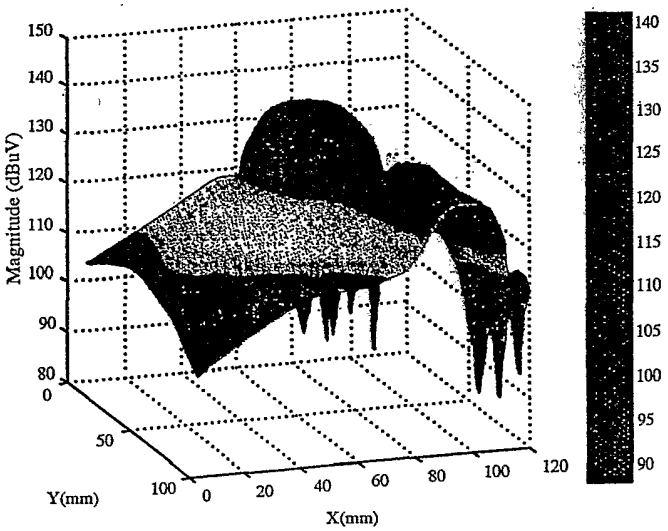
Magnitude (dBuV)
150
140
130
120
110
100
90
80
0
50
100
Y(mm)
0
20
40
60
80
100
120
X(mm)
140
135
130
125
120
115
110
105
100
95
90

FIG.6(b)

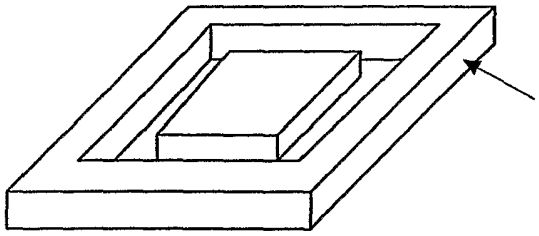

FIG.7(a)

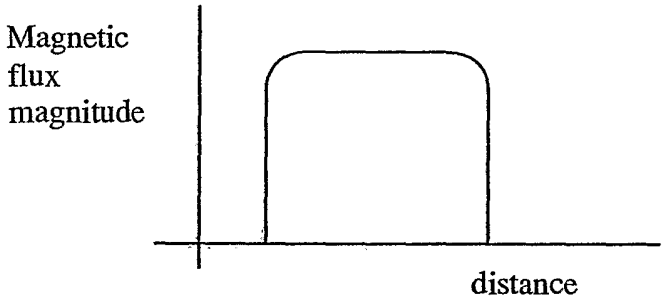

FIG.7(b)

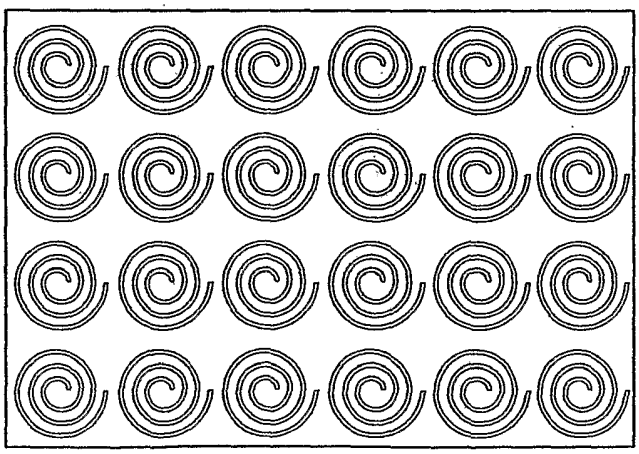

FIG.8

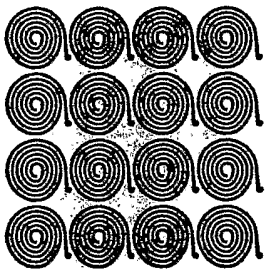

FIG.9(a)

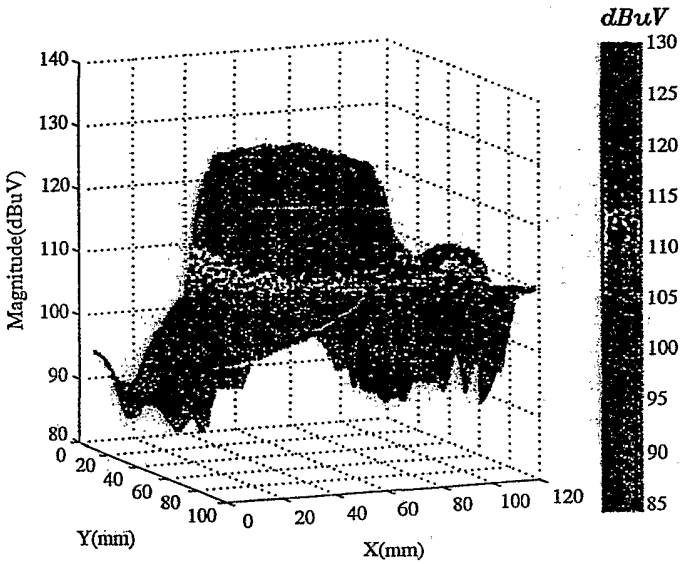
dBuV
130
125
120
115
110
105
100
95
90
85
Magnitude(dBuV)
140
130
120
110
100
90
80
0
20
40
60
80
100
Y(mm)
0
20
40
60
80
100
120
X(mm)

FIG.9(b)

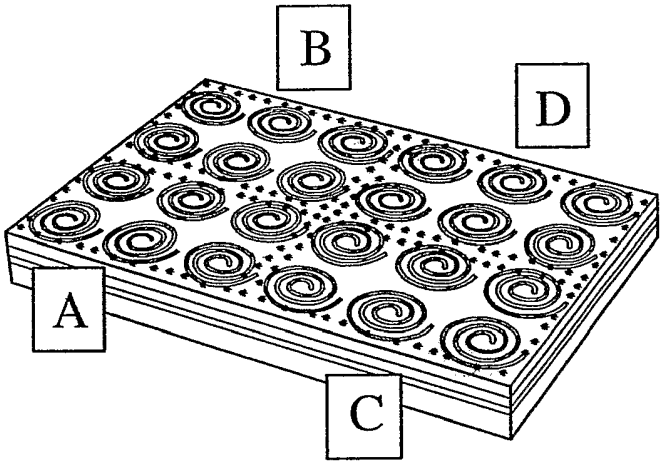

FIG.10(a)

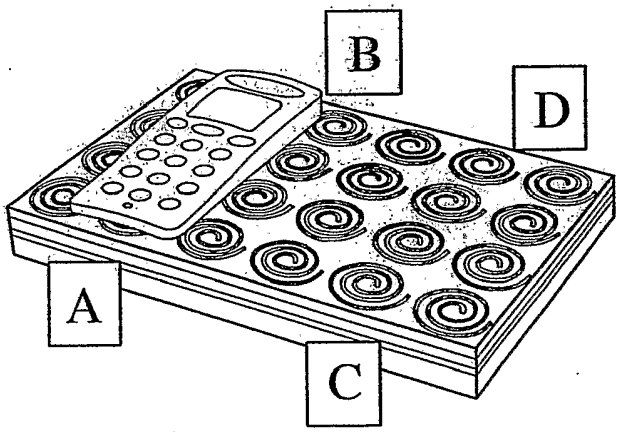

FIG.10(b)

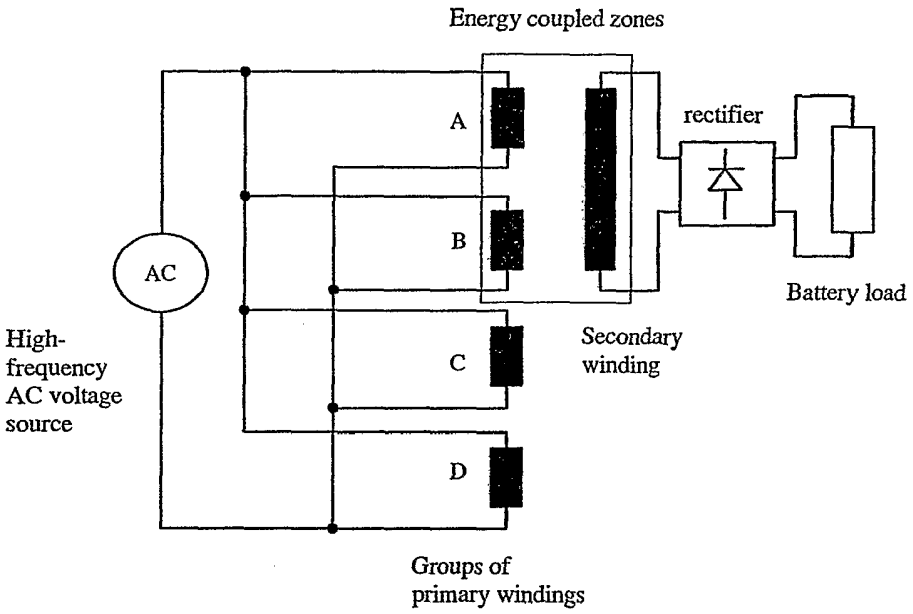

FIG.10(c)

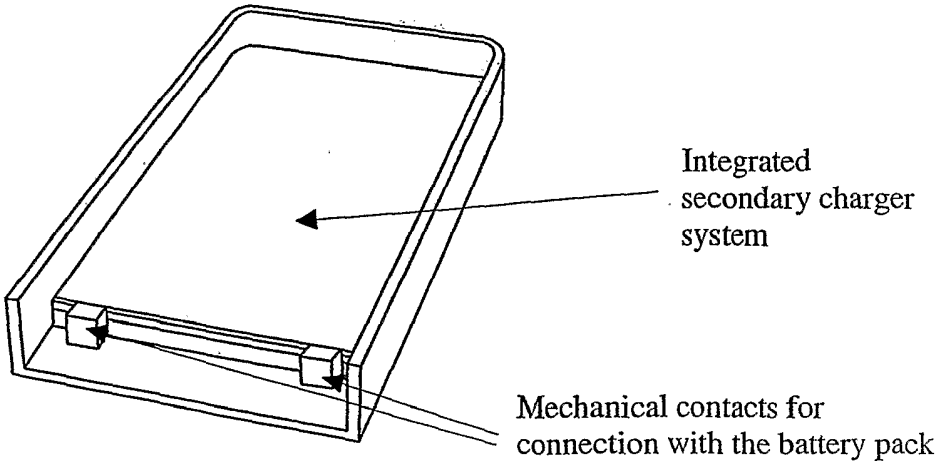

FIG.11

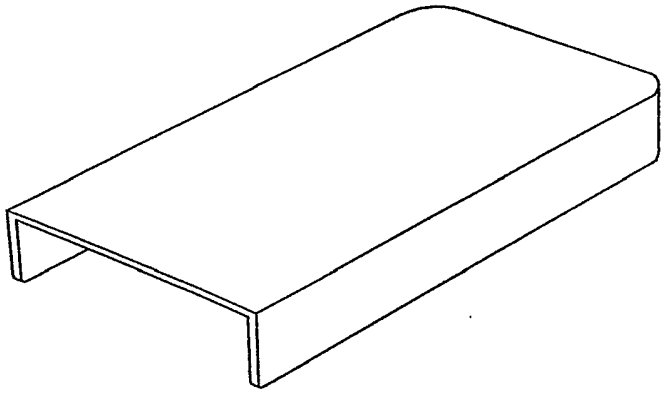

FIG.12(a)

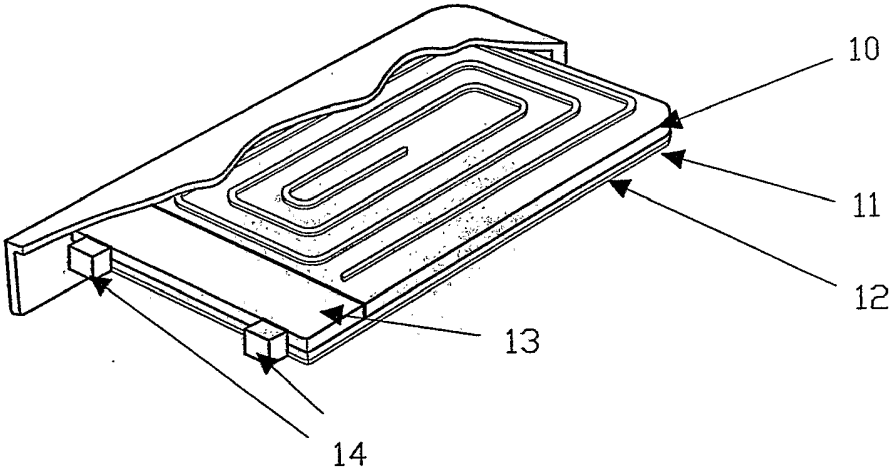

FIG.12(b)

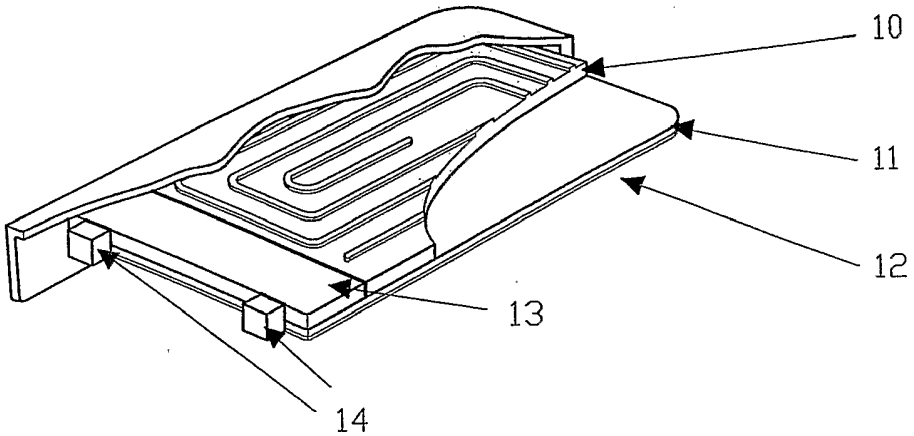

FIG.12(c)

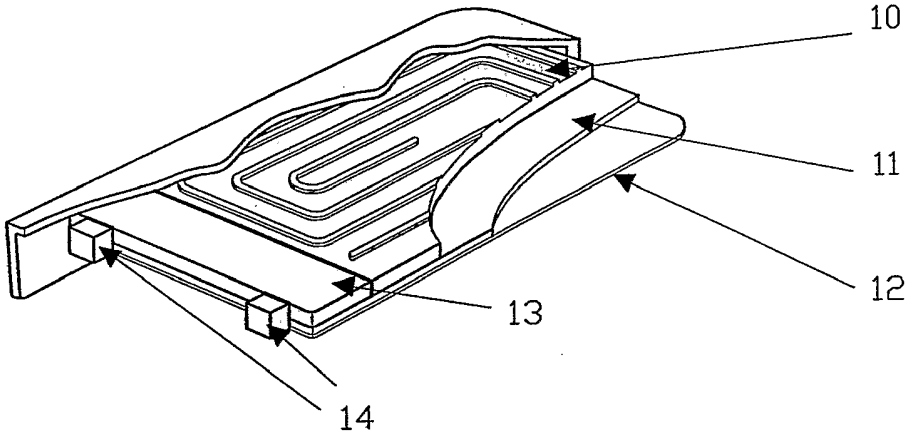

FIG.12(d)

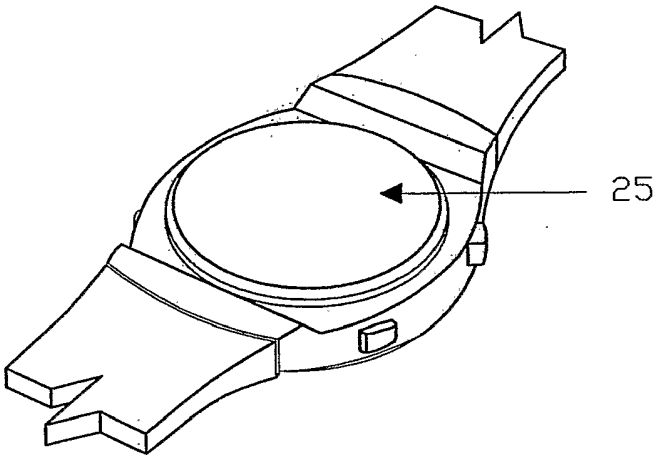

FIG.13(a)

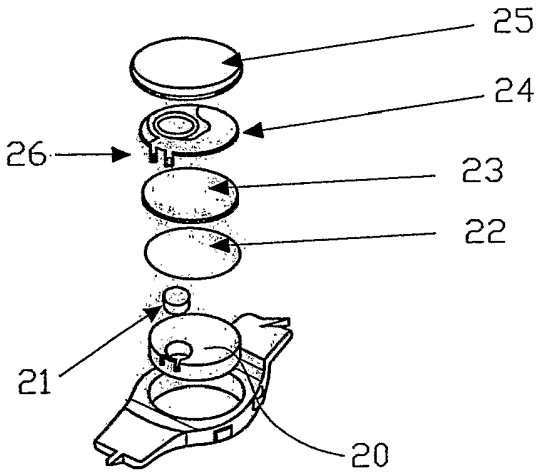

FIG.13(b)

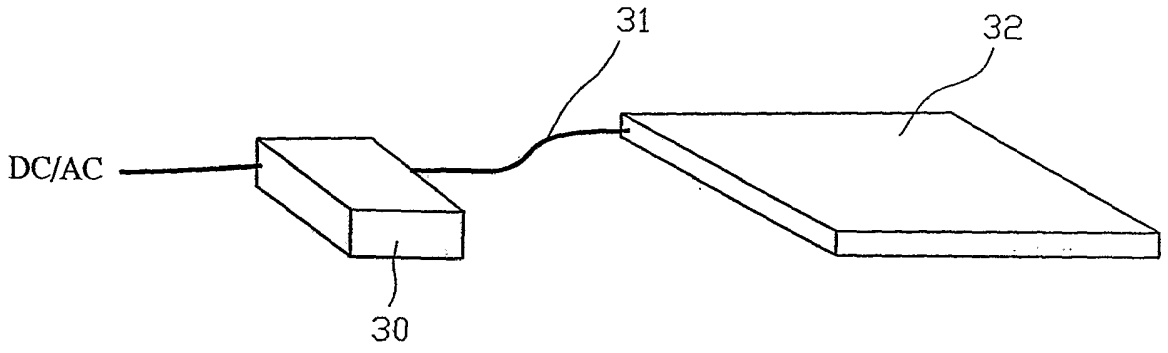

FIG.14

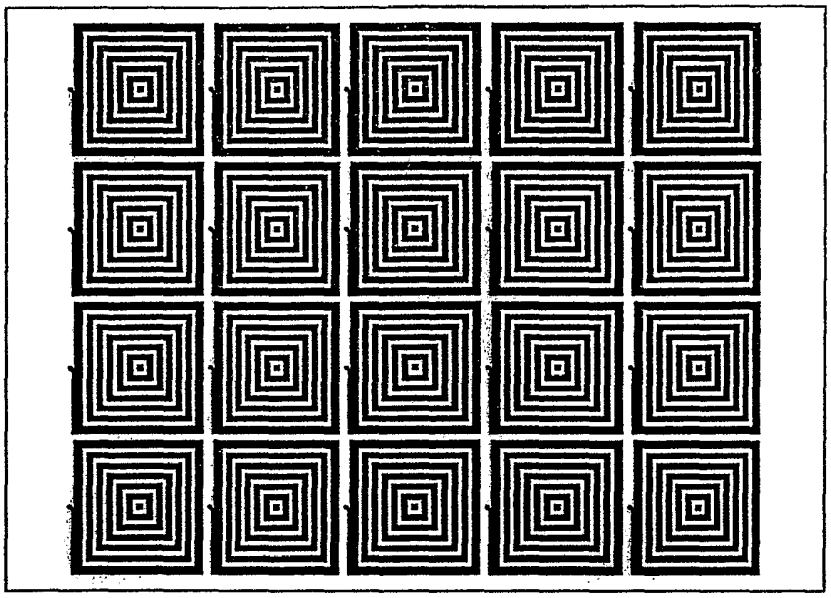

FIG.15

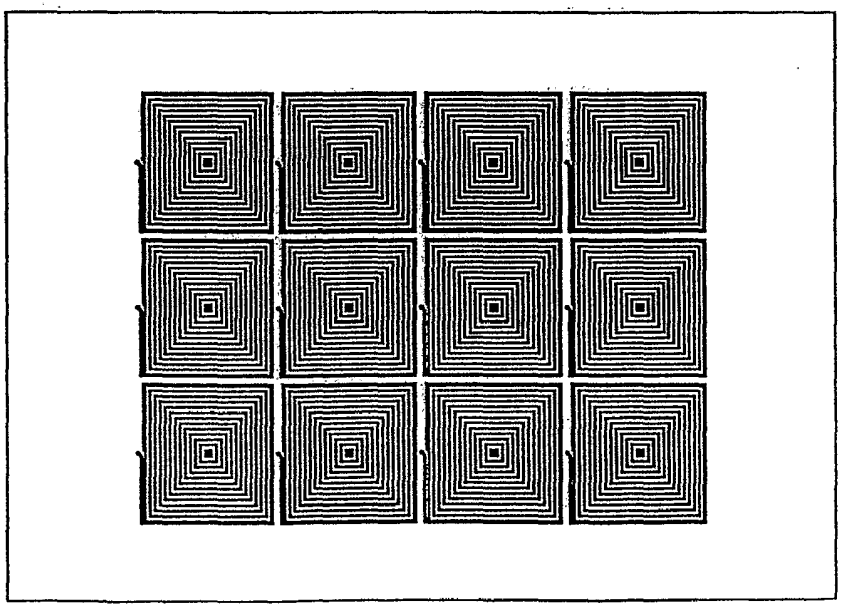

FIG.16

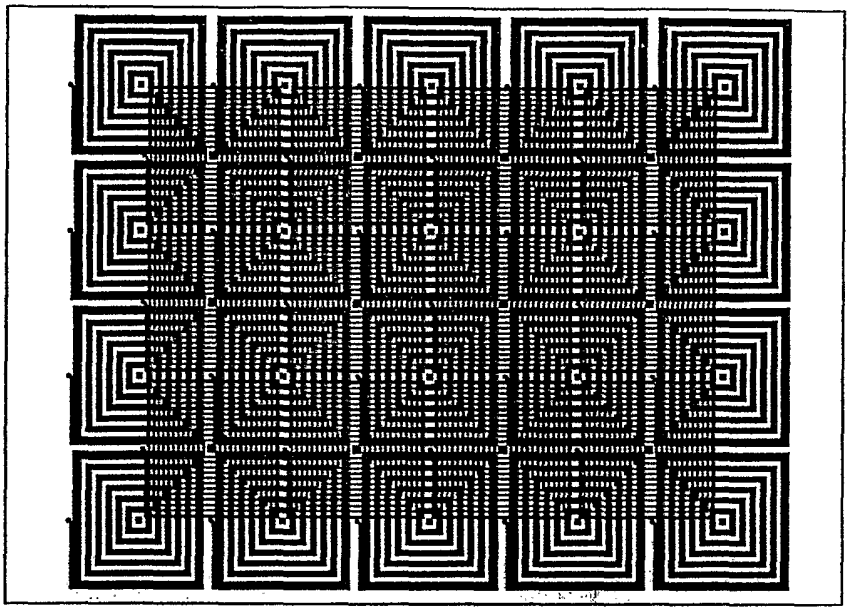

FIG.17

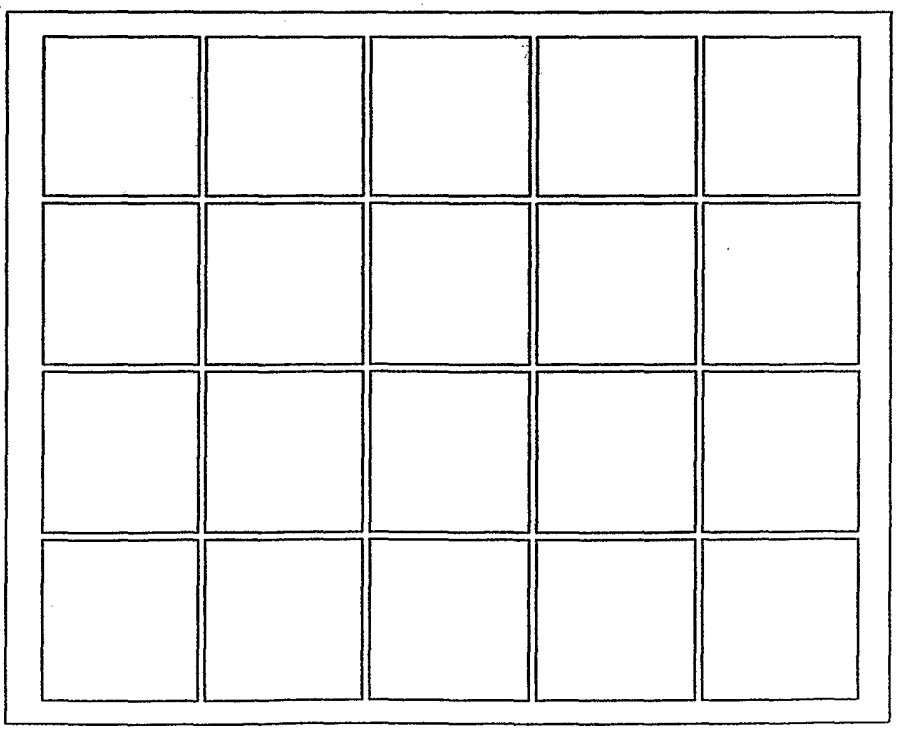

FIG.18

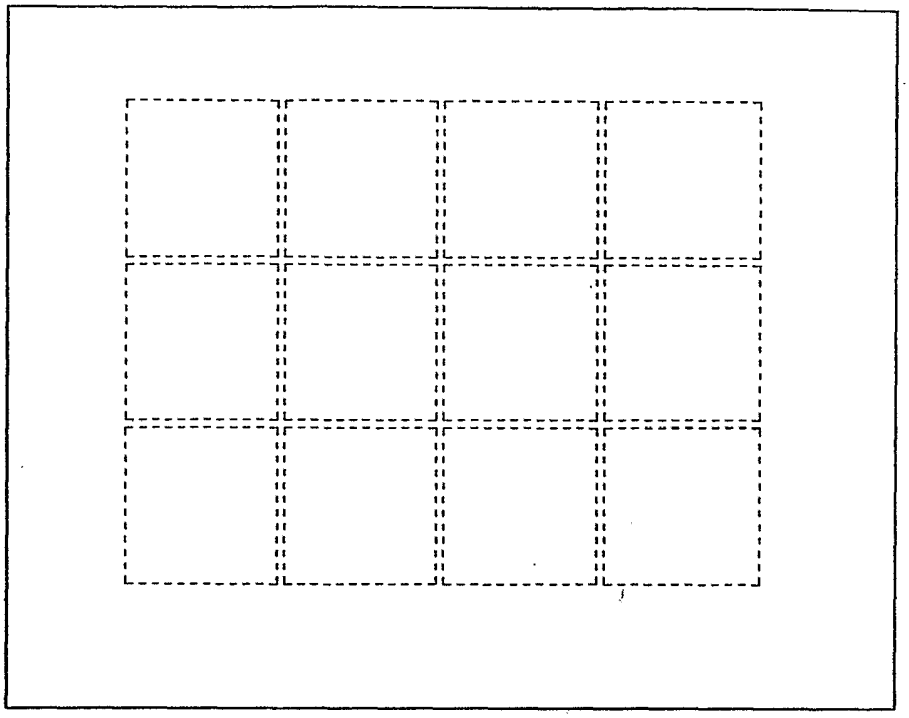

FIG.19

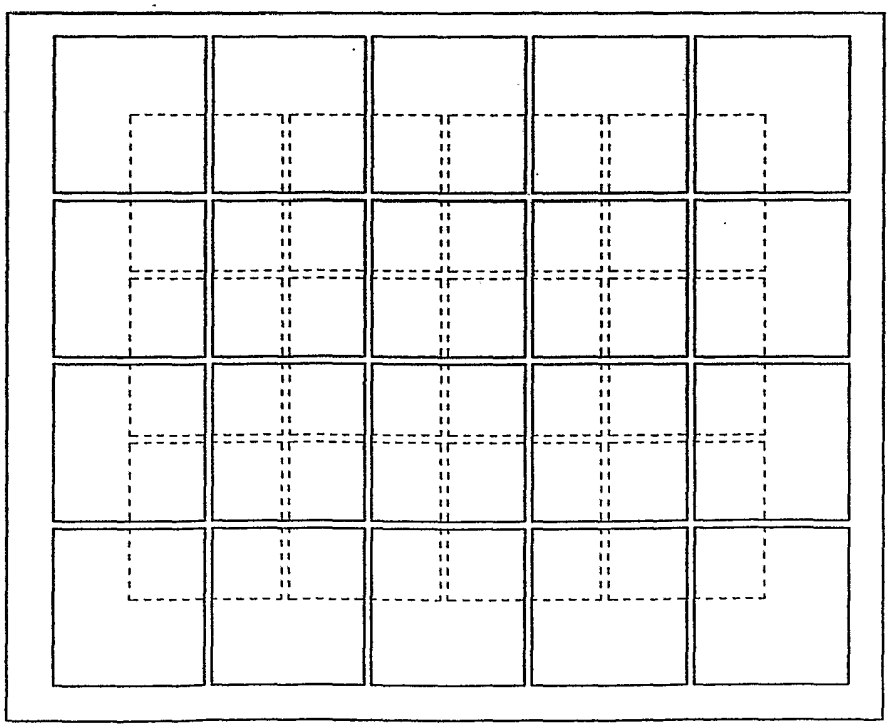

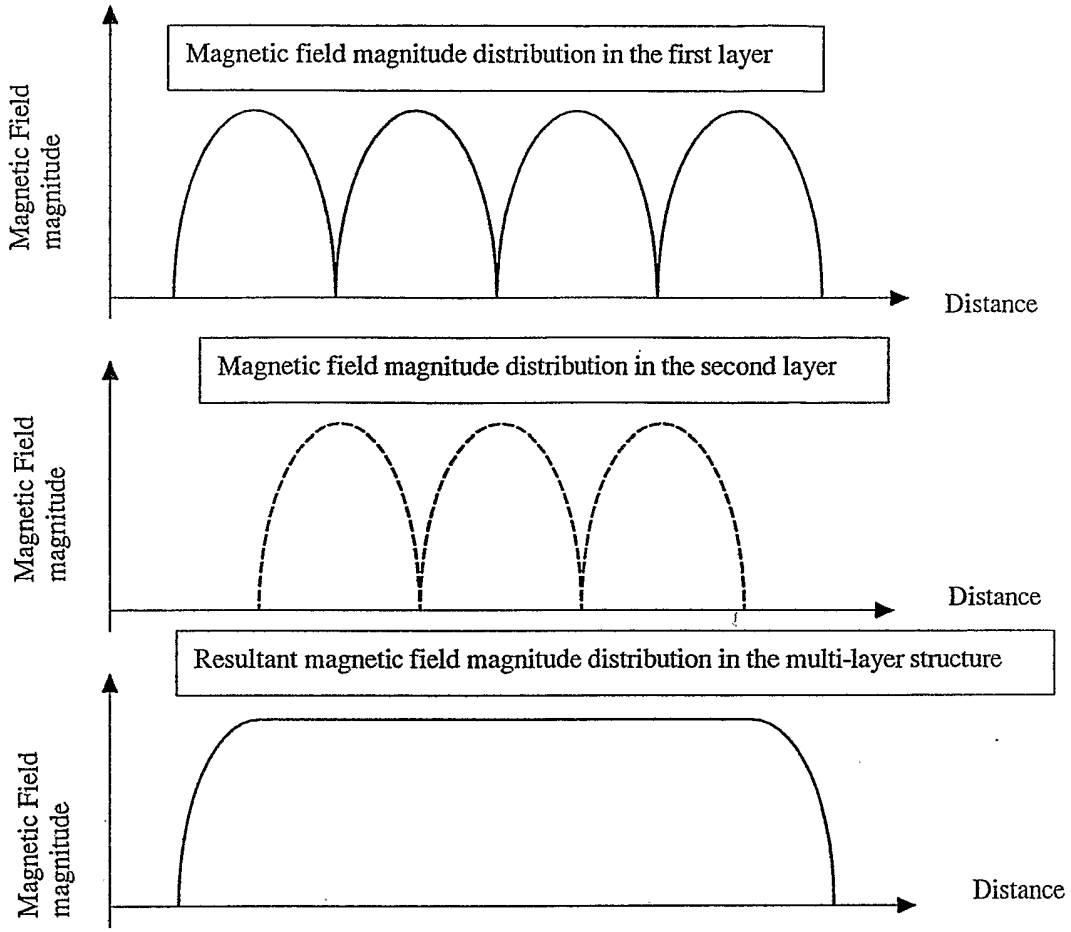

FIG.21

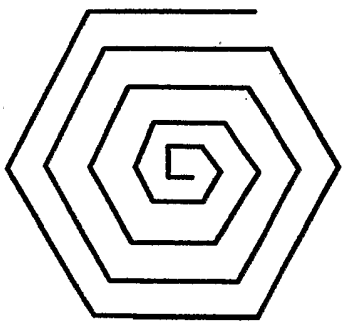

FIG.22

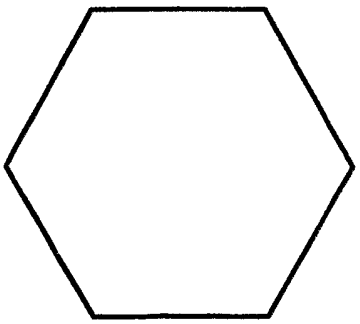

FIG.23

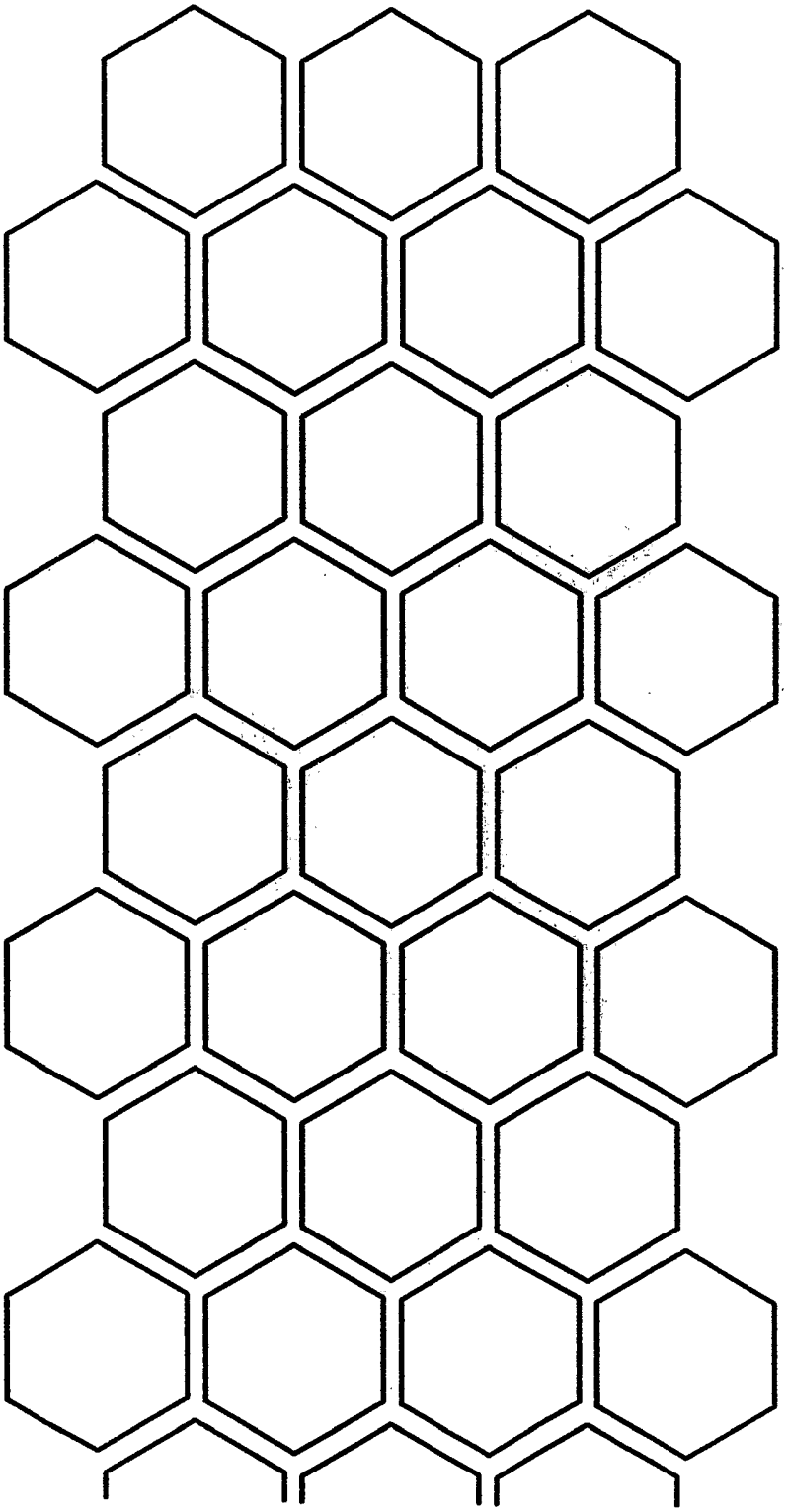

FIG.24

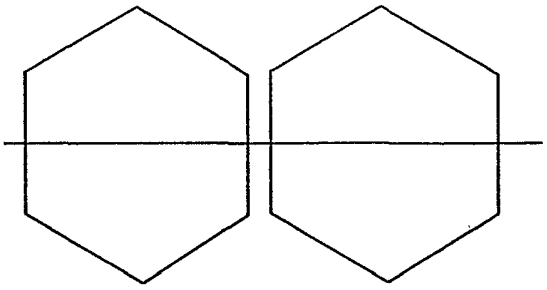

FIG.25

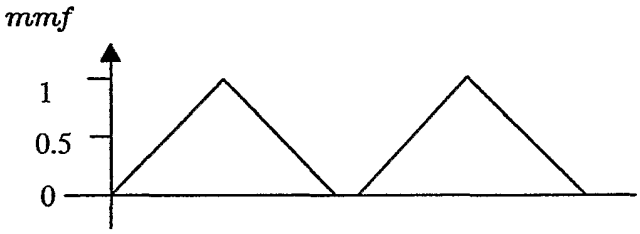

FIG.26

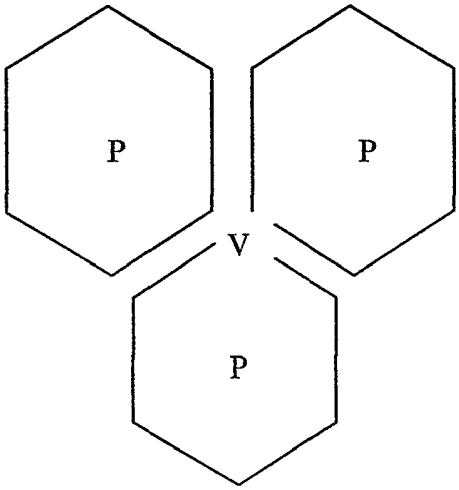

FIG.27

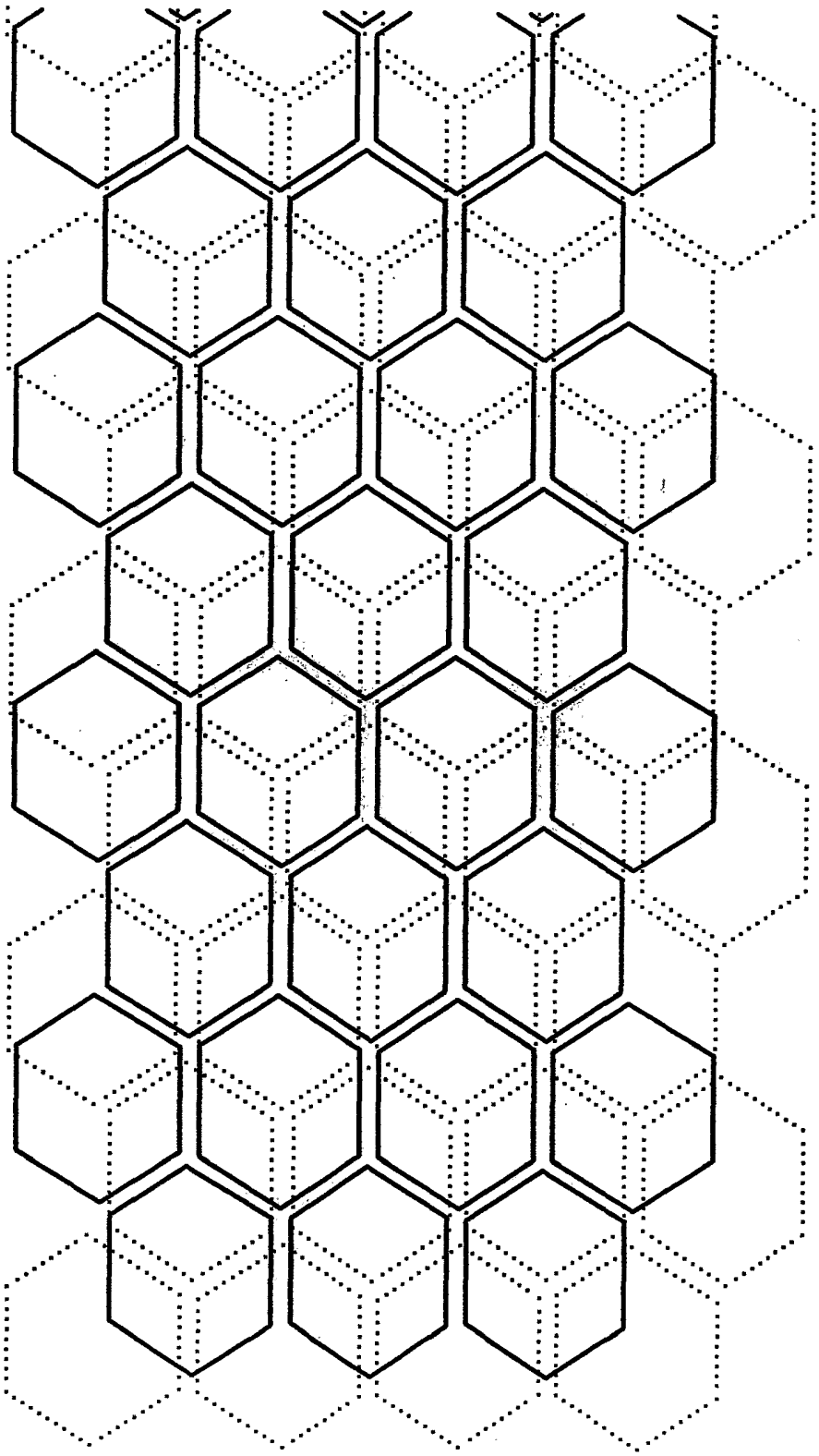

FIG.28

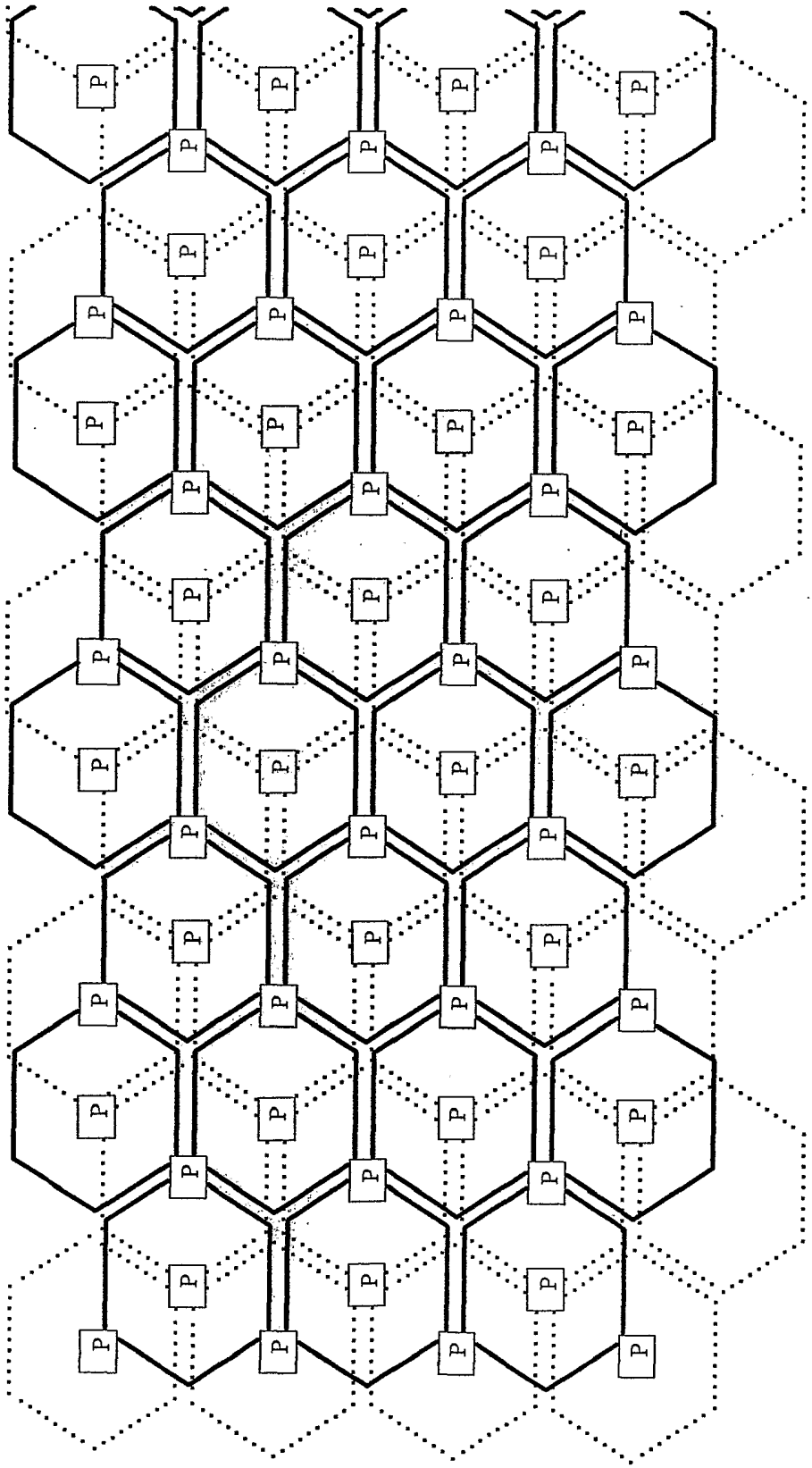

FIG.29

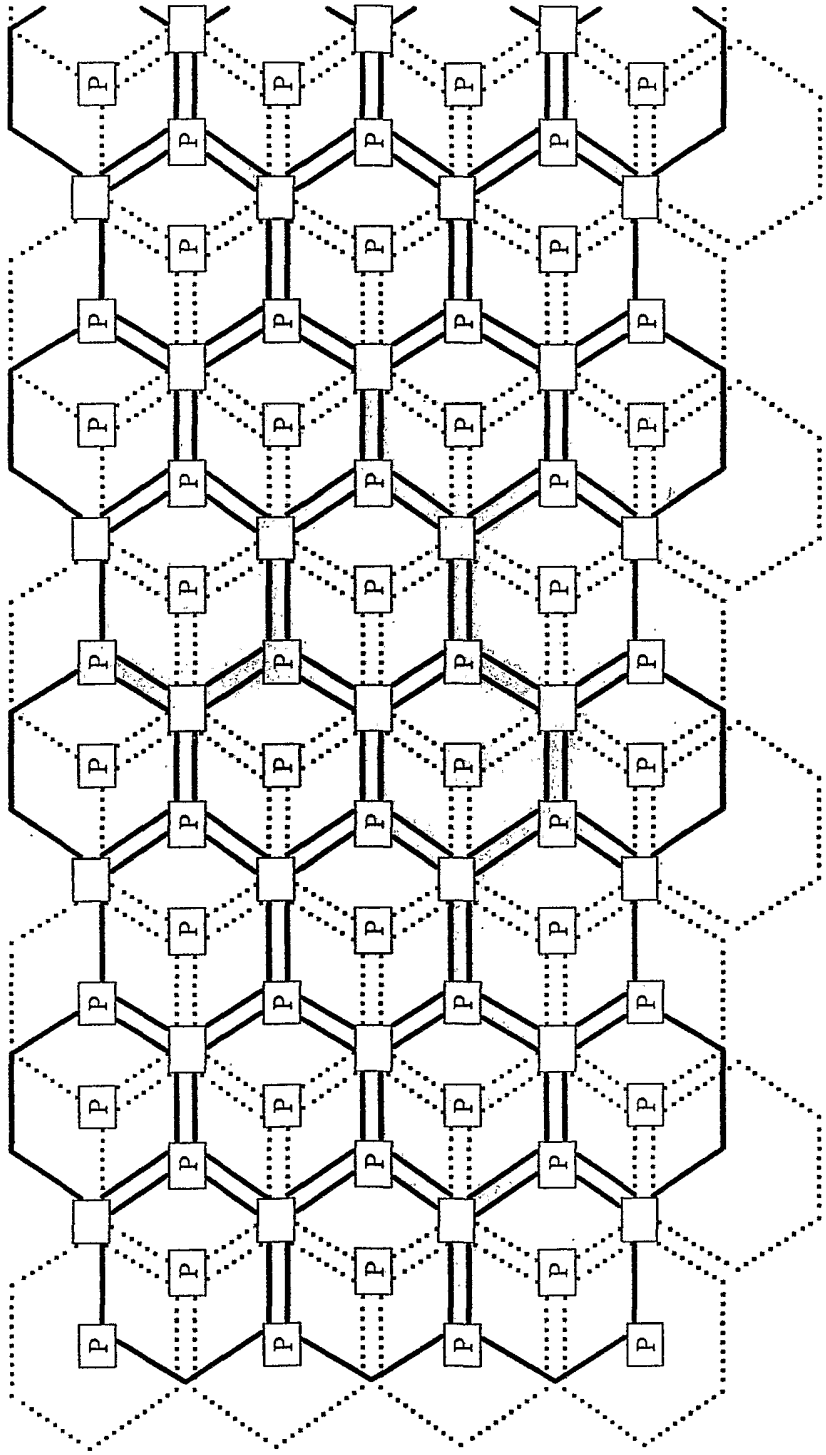

FIG.30

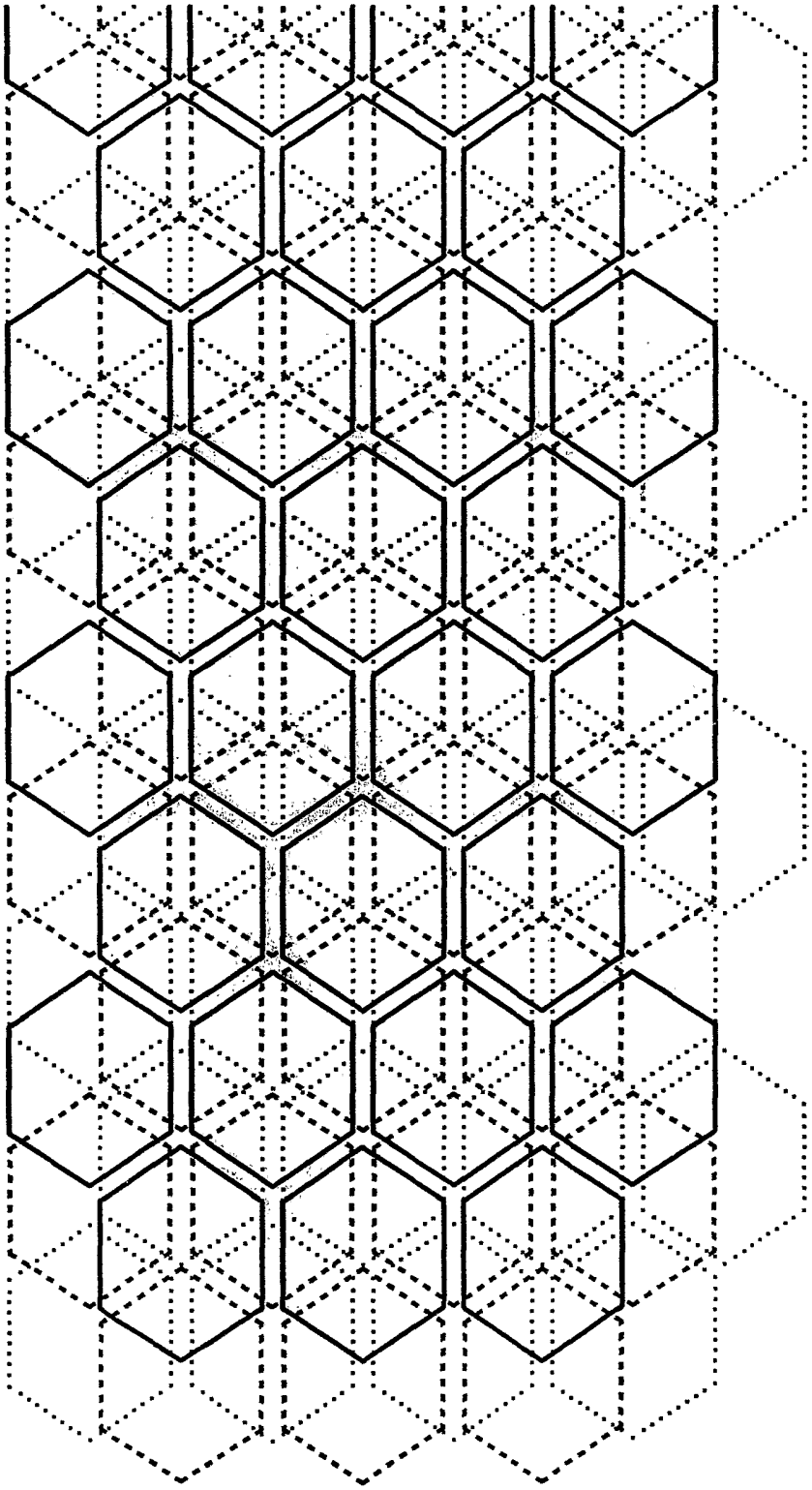

FIG.31

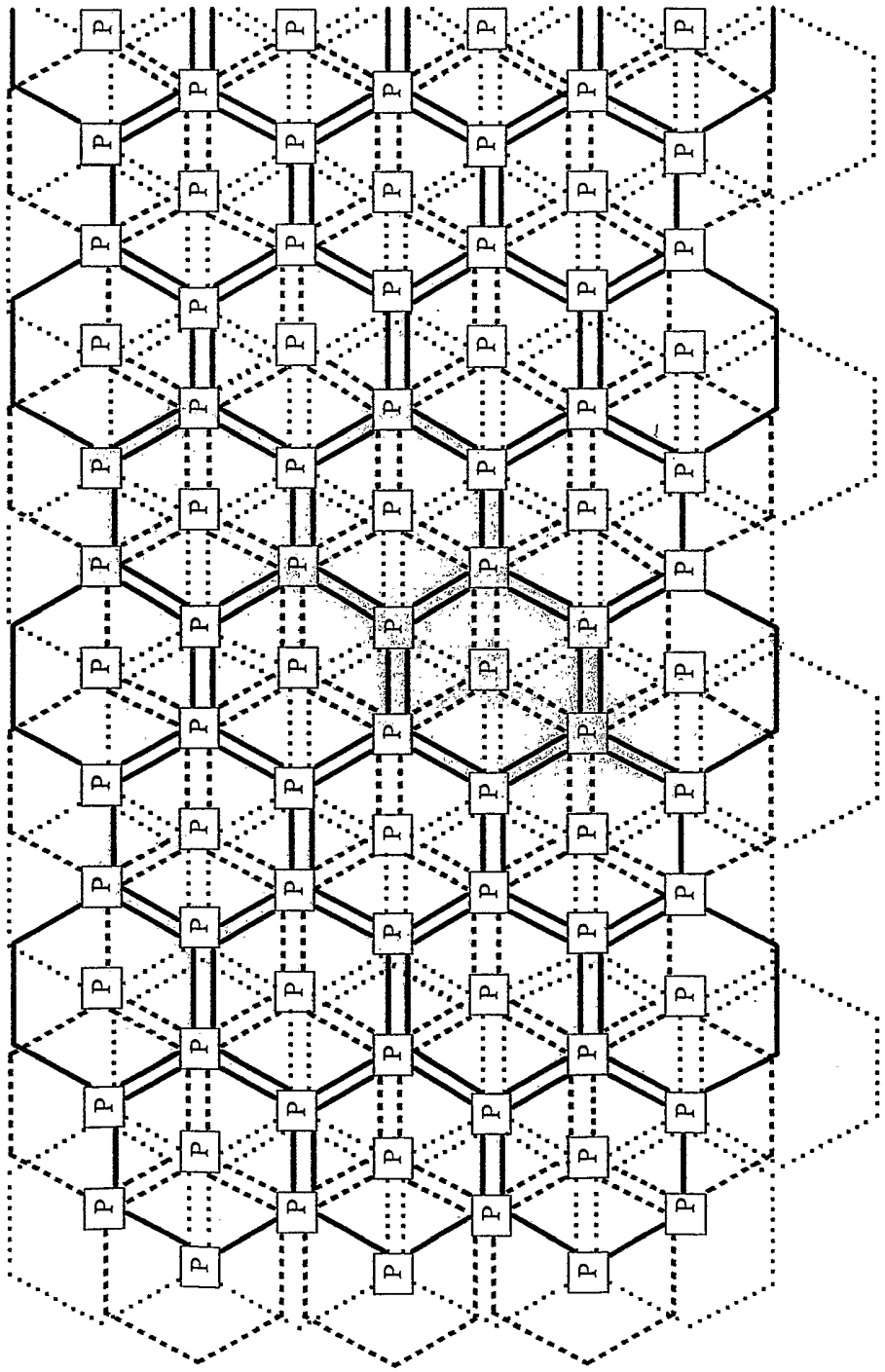

FIG.32

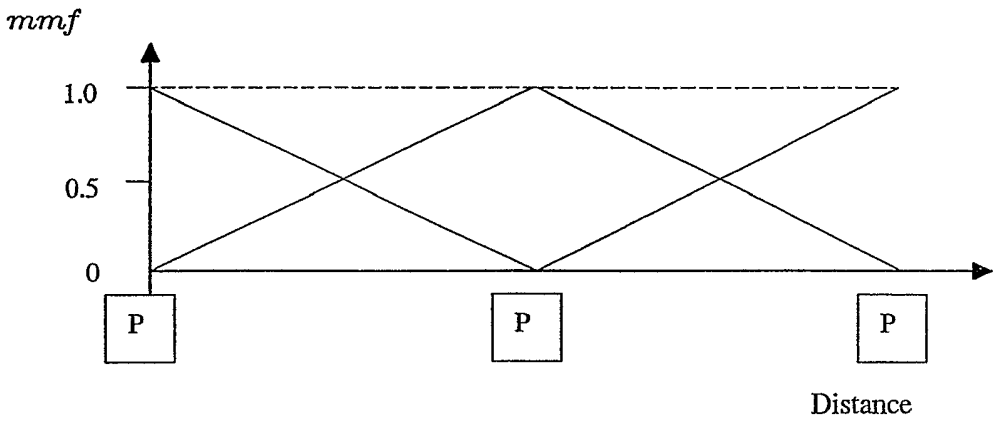

FIG.33

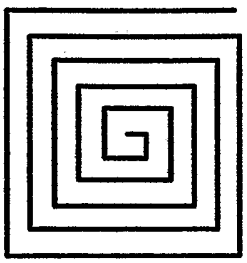

FIG.34

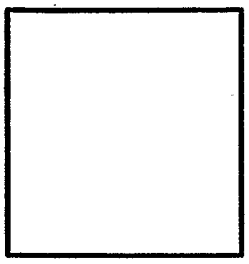

FIG.35

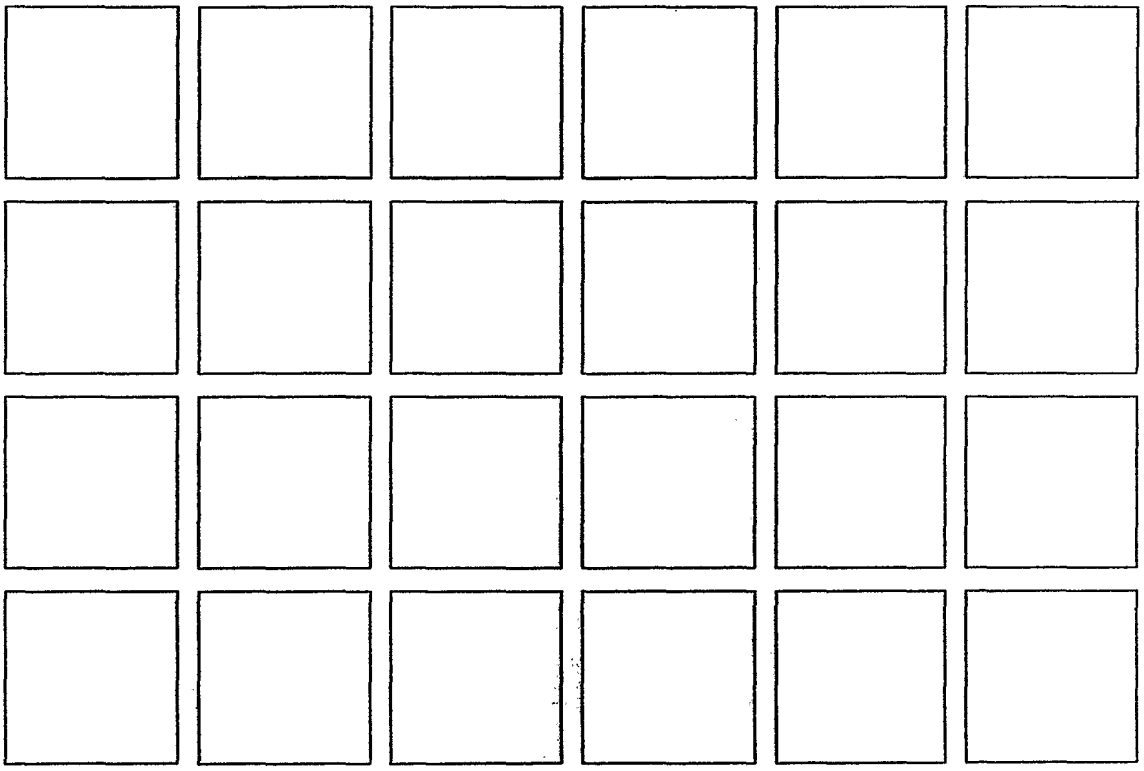

FIG.36

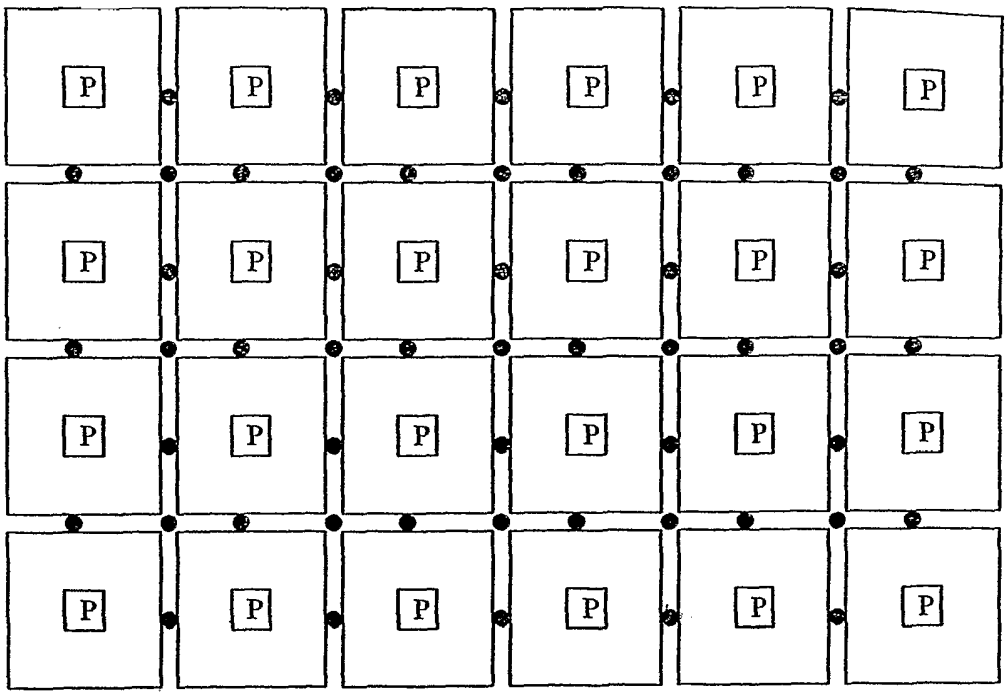
P
P
P
P
P
P
P
P
P
P
P
P
P
P
P
P
P
P
P
P
P
P
P
P

FIG.37

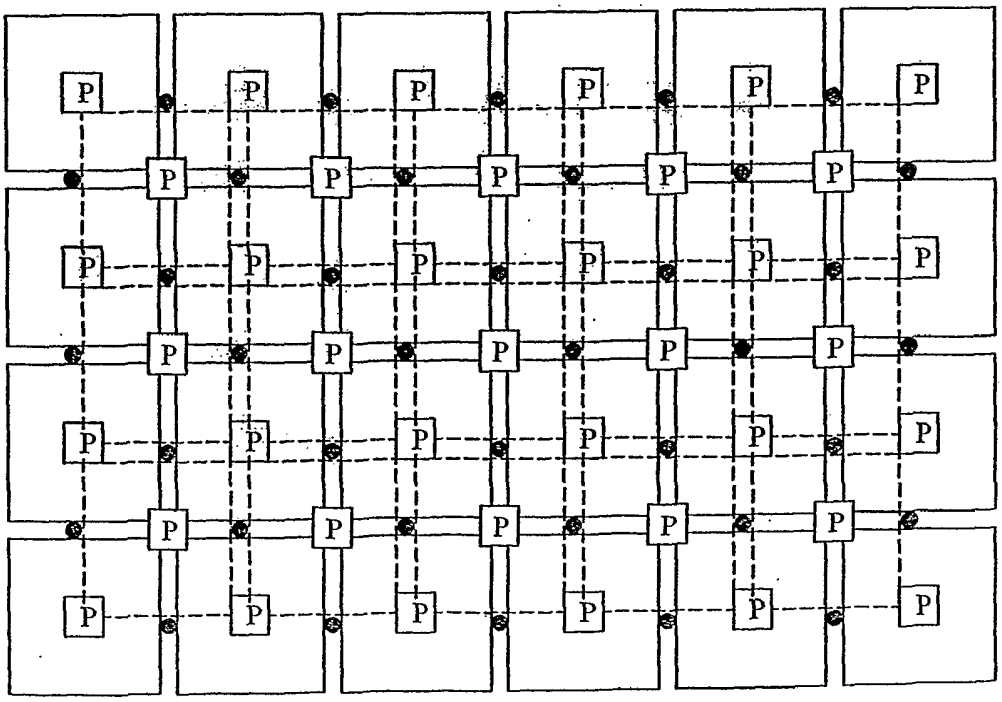
P
P
P
P
P
P
P
P
P
P
P
P
P
P
P
P
P
P
P
P
P
P
P
P
P
P
P
P
P
P
P
P
P
P
P
P

FIG.38

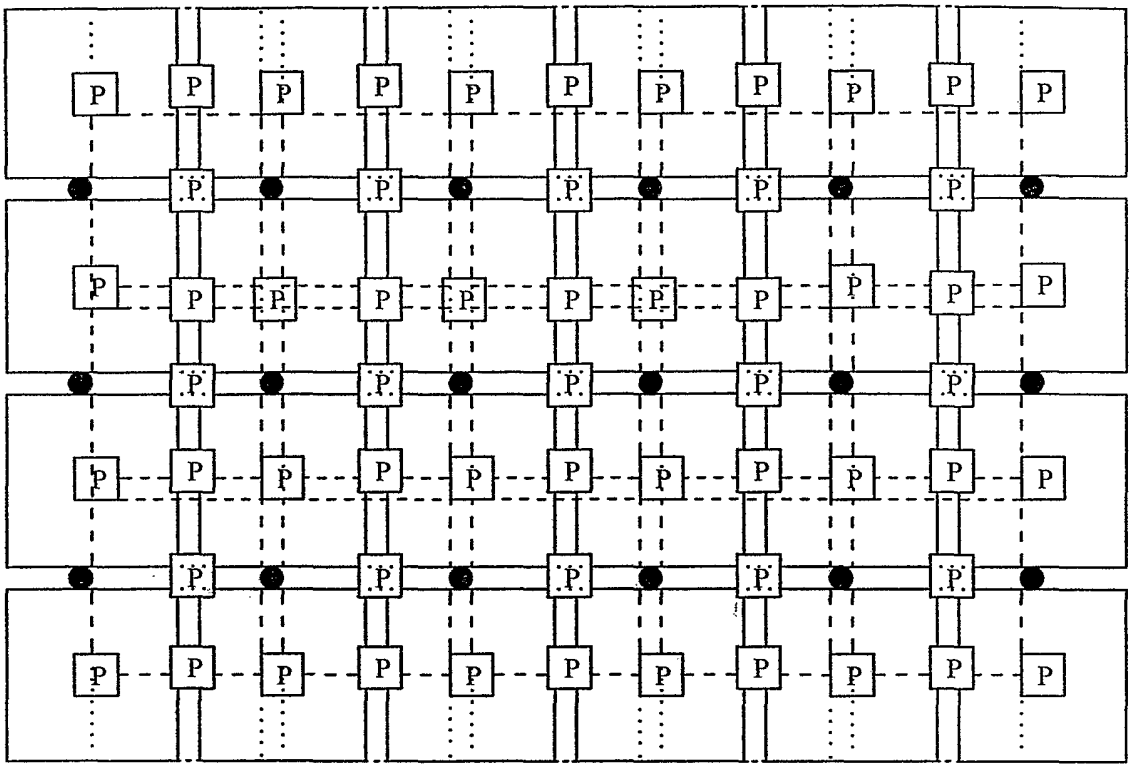

FIG.39

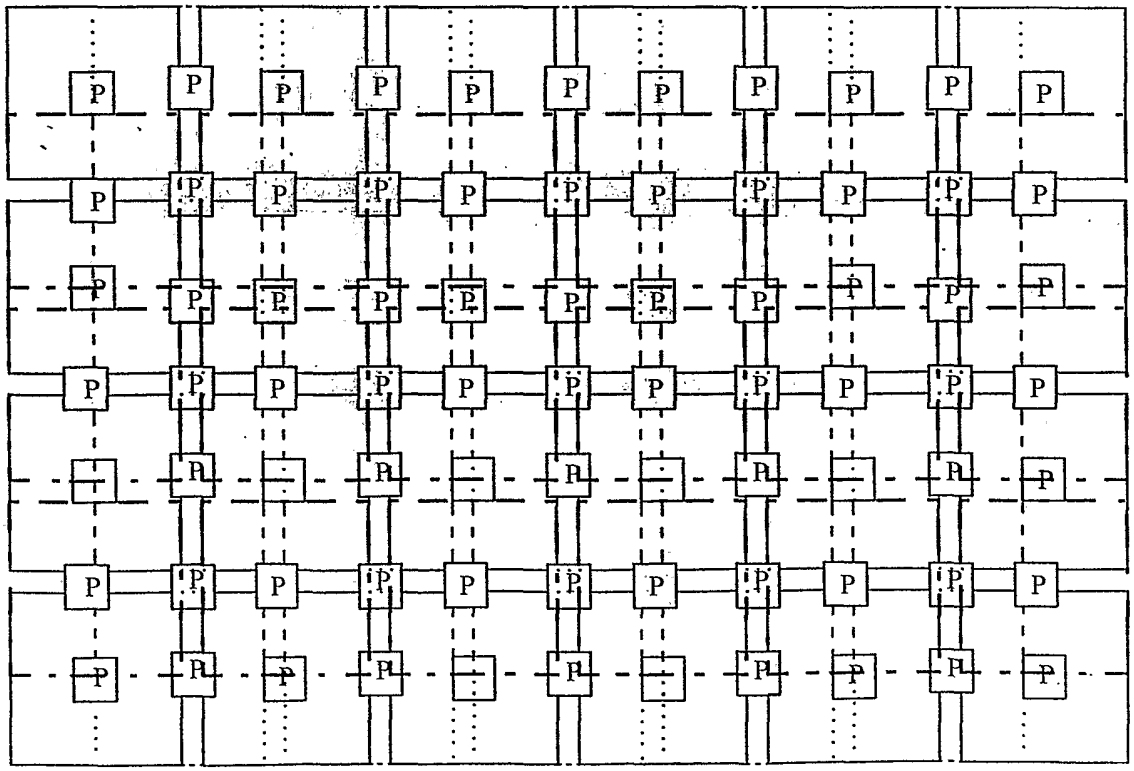

FIG.40

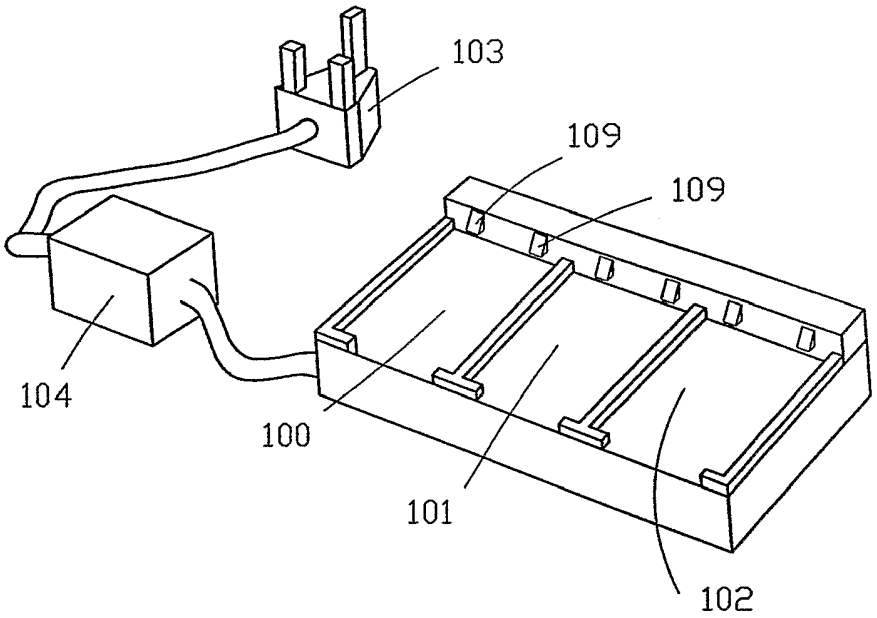

FIG.41

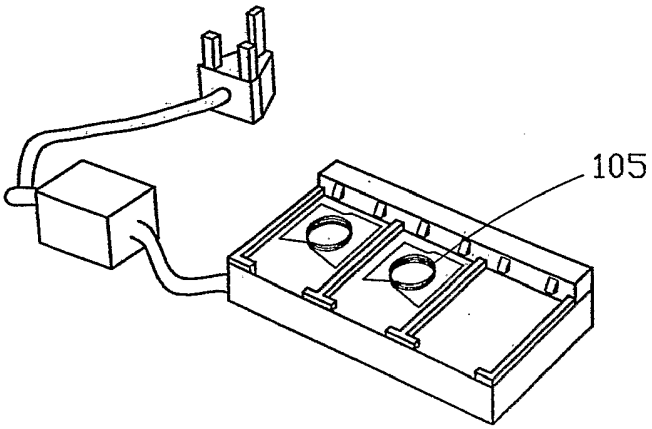

FIG.42

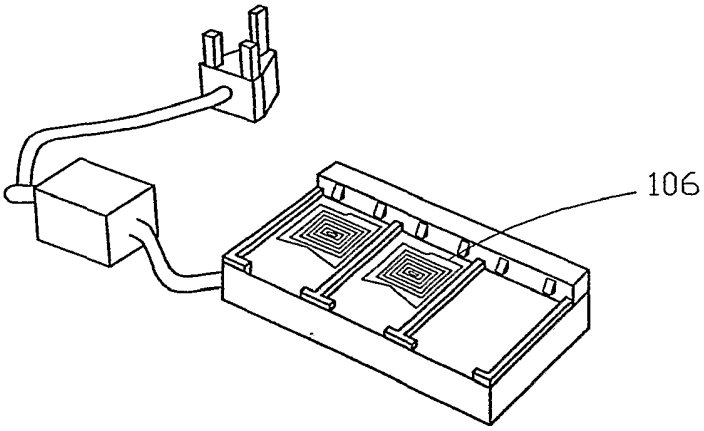

FIG.43

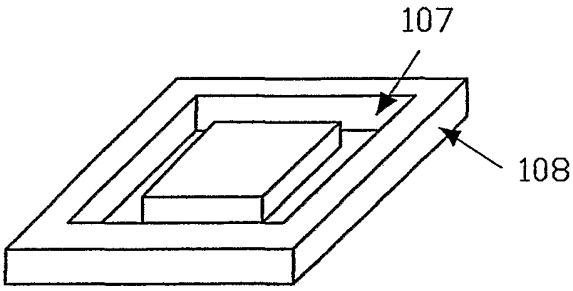

FIG.44(a)

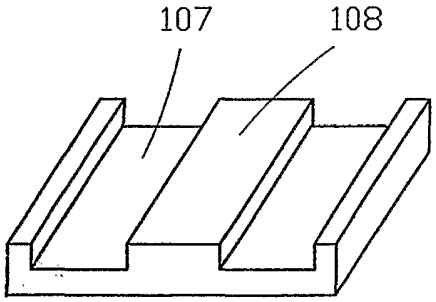

FIG.44(b)

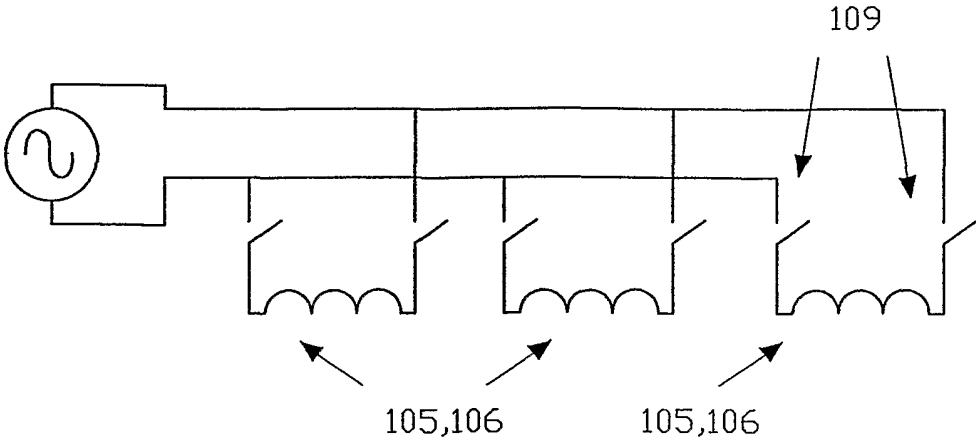

FIG.45

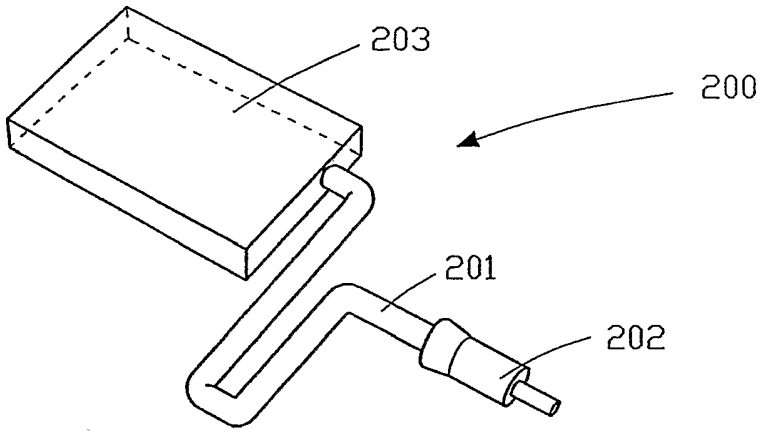

FIG.46

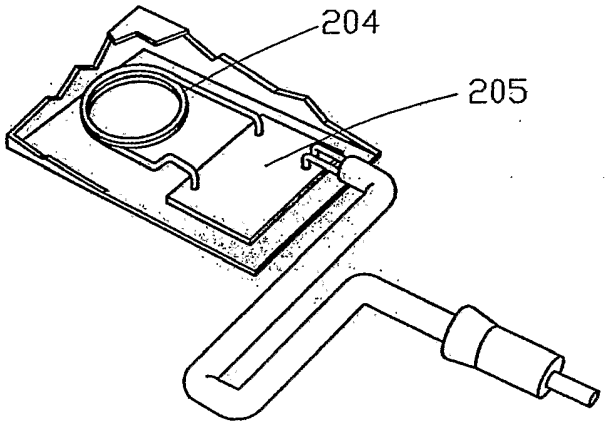

FIG.47

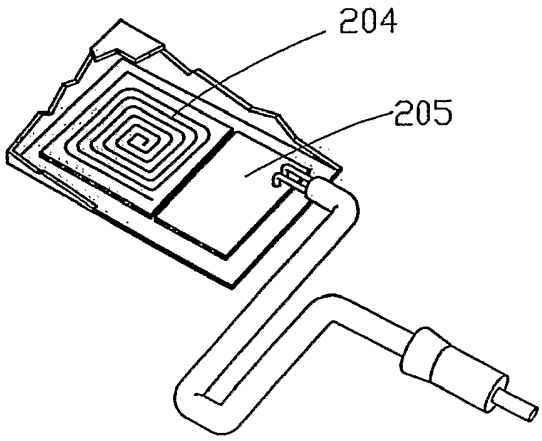

FIG.48

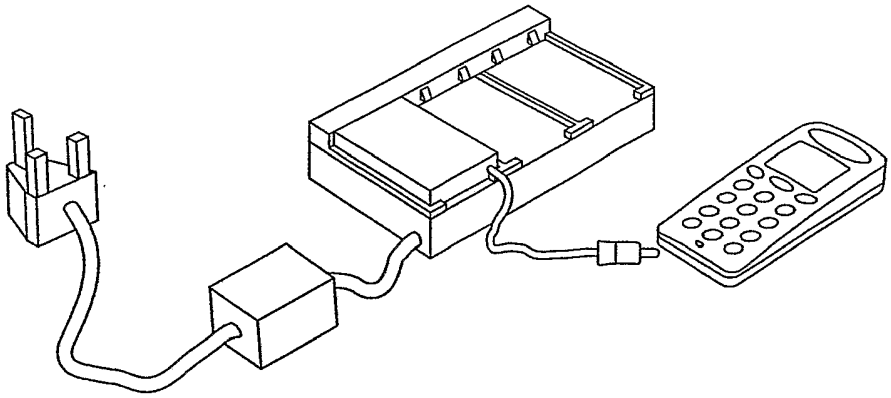

FIG.49

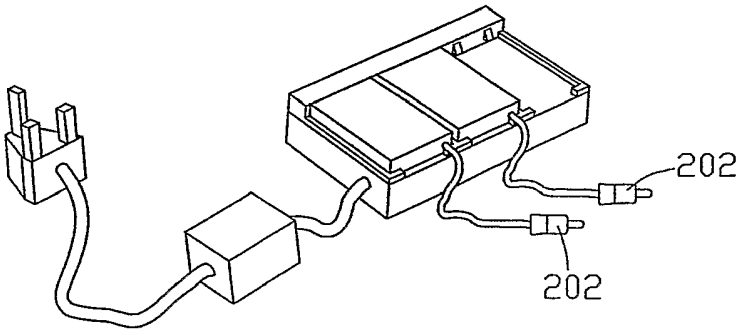

FIG.50

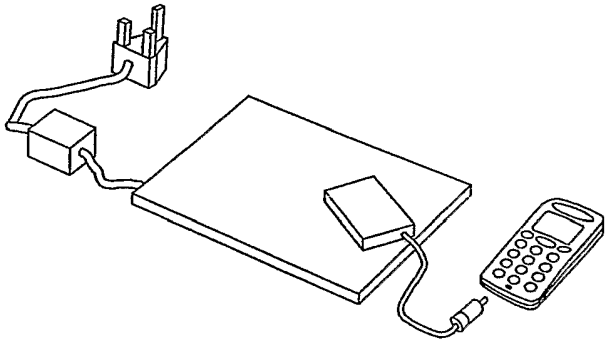

FIG.51

INTERNATIONAL SEARCH REPORT

International application No.
PCT/AU03/00721

A. CLASSIFICATION OF SUBJECT MATTER

Int. Cl. [7]: H02J 7/00, H01F 38/14

According to International Patent Classification (IPC) or to both national classification and IPC

B. FIELDS SEARCHED

Minimum documentation searched (classification system followed by classification symbols)

Documentation searched other than minimum documentation to the extent that such documents are included in the fields searched

Electronic data base consulted during the international search (name of data base and, where practicable, search terms used)
DWPI, IEEE (battery, charger, coils, flat, shield)

C. DOCUMENTS CONSIDERED TO BE RELEVANT

Category*	Citation of document, with indication, where appropriate, of the relevant passages	Relevant to claim No.
P,X	HATANAKA, K. et al. "Power Transmission of a desk with a cord-free power supply" IEEE Transactions on Magnetics Volume: 38, Issue: 5, September 2002 Pages 3329-3331	18-21,31
X	HATANAKA, K. et al. "Characteristics of the desk with cord-free power supply" INTERMAG 2002, DIGEST OF TECHNICAL PAPERS 28 April-2 May 2002 Abstract, whole document	18
X	EP 298707 B (SEIKO EPSON CORPORATION) 28 September 1994 Whole document	1,4,11,32
Y	Column 4 line17-22, column 3 lines 11-26	2,3

[X] Further documents are listed in the continuation of Box C [X] See patent family annex

* Special categories of cited documents:

"A" document defining the general state of the art which is not considered to be of particular relevance

"E" earlier application or patent but published on or after the international filing date

"L" document which may throw doubts on priority claim(s) or which is cited to establish the publication date of another citation or other special reason (as specified)

"O" document referring to an oral disclosure, use, exhibition or other means

"P" document published prior to the international filing date but later than the priority date claimed

"T" later document published after the international filing date or priority date and not in conflict with the application but cited to understand the principle or theory underlying the invention

"X" document of particular relevance; the claimed invention cannot be considered novel or cannot be considered to involve an inventive step when the document is taken alone

"Y" document of particular relevance; the claimed invention cannot be considered to involve an inventive step when the document is combined with one or more other such documents, such combination being obvious to a person skilled in the art

"&" document member of the same patent family

Date of the actual completion of the international search	Date of mailing of the international search report
1 July 2003	- 9 JUL 2003
Name and mailing address of the ISA/AU AUSTRALIAN PATENT OFFICE PO BOX 200, WODEN ACT 2606, AUSTRALIA E-mail address: pct@ipaustralia.gov.au Facsimile No. (02) 6285 3929	Authorized officer **DALE E. SIVER** Telephone No : (02) 6283 2196

Form PCT/ISA/210 (second sheet) (July 1998)

INTERNATIONAL SEARCH REPORT

International application No.
PCT/AU03/00721

C (Continuation). DOCUMENTS CONSIDERED TO BE RELEVANT

Category*	Citation of document, with indication, where appropriate, of the relevant passages	Relevant to claim No.
X	US 6008622 A (NAKAWATASE) 28 December 1999 Column 1 lines 39-43, column 2 lines 5-17, 21-23, 49-55	1,4,11,32
Y	US 6265789 B (HONDA et al.) 24 July 2001 Abstract, figures, claim 8, column 7 lines 8-23, column 11 lines 62-66	2,3
Y	WO 00/02212 A (ABIOMED, INC.) 13 January 2000 Abstract, Figure 1,7, page 2 lines 5-9	1,11,32,33
A	US 6172884 B (LANNI) 9 January 2001 Abstract, figures, column 18 line 63 to column 19 line 60	35-36,42,48

Form PCT/ISA/210 (continuation of Box C) (July 1998)

INTERNATIONAL SEARCH REPORT

Information on patent family members

International application No.
PCT/AU03/00721

This Annex lists the known "A" publication level patent family members relating to the patent documents cited in the above-mentioned international search report. The Australian Patent Office is in no way liable for these particulars which are merely given for the purpose of information.

Patent Document Cited in Search Report		Patent Family Member					
EP	298707	JP	62260735	EP	245999	ES	2003287
		US	5246734				
US	6008622	JP	11103531				
US	6265789	EP	977297	WO	9927603		
WO	200002212	AU	48613/99	CA	2336725	EP	1095384
		US	6324430	US	2002055763	US	6389318
		US	2002058971				
US	6172884	US	5479331	US	5636110	US	5838554
		US	5949213	US	6091611	US	6266261
		US	2003042881	AU	200153089	CA	2403856
		EP	1273093	WO	200176051		

END OF ANNEX