UNITED STATES PATENT AND TRADEMARK OFFICE

BEFORE THE PATENT TRIAL AND APPEAL BOARD

SAMSUNG ELECTRONICS CO., LTD.
Petitioner

v.

MOJO MOBILITY INC.
Patent Owner

Patent No. 11,316,371

PETITION FOR *INTER PARTES* REVIEW
OF U.S. PATENT NO. 11,316,371

TABLE OF CONTENTS

I. INTRODUCTION 1

II. MANDATORY NOTICES 1

III. PAYMENT OF FEES 2

IV. GROUNDS FOR STANDING 2

V. PRECISE RELIEF REQUESTED AND GROUNDS 2

VI. LEVEL OF ORDINARY SKILL 4

VII. THE '371 PATENT 5

VIII. CLAIM CONSTRUCTION 5

IX. DETAILED EXPLANATION OF GROUNDS 6

A. Ground 1: Claims 1 and 4 are obvious over *Okada*, *Odendaal*, *Kook, Calhoon,* and *Black* 6

1. Claim 1 6

2. Claim 4 62

B. Ground 2: Claim 2 is obvious over *Okada* in view of *Odendaal*, *Kook, Calhoon, Black*, and *Kazutoshi* 68

1. Claim 2 68

C. Ground 3: Claim 3 is obvious over *Okada* in view of *Odendaal*, *Kook*, *Calhoon*, *Black*, and *Masias* 71

1. Claim 3 71

D. Ground 4: Claim 8 is obvious over *Okada* in view of *Odendaal*, *Kook, Calhoon, Black*, and *Chen* 77

1. Claim 8 77

E. Ground 5: Claim 11 is obvious over *Okada* in view of *Odendaal*, *Kook, Calhoon, Black*, *Kazutoshi*, *Takagi, Masias* 81

1. Claim 11 81

F. Ground 6: Claim 12 is obvious over *Okada* in view of *Odendaal*, *Kook, Calhoon, Black*, and *Labrou* 92

1. Claim 12 92

X. DISCRETIONARY DENIAL IS NOT APPROPRIATE 95

XI. CONCLUSION 99

XII. APPENDIX A (CLAIM LISTING) 100

LIST OF EXHIBITS

Ex.1001	U.S. Patent No. 11,316,371
Ex.1002	Declaration of R. Jacob Baker, Ph.D., P.E.
Ex.1003	Curriculum Vitae of R. Jacob Baker, Ph.D., P.E.
Ex.1004	Prosecution History of U.S. Patent No. 11,316,371
Ex.1005	Translation of Japanese Patent Application Publication No. 2006-141170A ("*Okada*")[1]
Ex.1006	U.S. Patent No. 6,912,137 ("*Berghegger*")
Ex.1007	U.S. Patent Application Publication No. 2006/0145660A1 ("*Black*")
Ex.1008	U.S. Patent No. 6,960,968 ("*Odendaal*")
Ex.1009	U.S. Patent No. 6,489,745 ("*Koreis*")
Ex.1010	U.S. Patent No. 6,366,817 ("*Kung*")
Ex.1011	Physics, Henry Semat et al., Rinehart & Co., Inc., 1958, Chapters 29-32 ("*Semat*")
Ex.1012	U.S. Patent No. 5,702,431 ("*Wang*")
Ex.1013	International Patent Application Publication No. WO1996040367 ("*WangII*")
Ex.1014	Handbook of Radio and Wireless Technology, Stan Gibilisco, McGraw-Hill, 1999 ("*Gibilisco*")
Ex.1015	U.S. Patent No. 4,942,352 ("*Sano*")

[1] Exhibit 1005 includes the original Japanese version and a certified English translation. Citations to *Okada* are to the English translation.

Ex.1016	Fundamentals of Electric Circuits, 2d., Charles Alexander et al., McGraw-Hill, 2004 ("*Alexander*")
Ex.1017	International Patent Application Publication No. WO1994/18683 ("*Koehler*")
Ex.1018	Mojo Mobility's Infringement Chart for U.S. Patent No. 11,316,371 (Ex. 4) accompanying Mojo Mobility's Infringement Contentions in *Mojo Mobility Inc. v. Samsung Elecs. Co., Ltd.*, No. 2:22-cv-00398 (E.D. Tex.) (February 28, 2023)
Ex.1019	U.S. Patent Application Publication No. 2005/0068019 ("*Nakamura*")
Ex.1020	U.S. Patent Application Publication No. 2007/0109708 ("*Hussman*")
Ex.1021	U.S. Patent Application Publication No. 2003/0210106 ("*Cheng*")
Ex.1022	Mojo Mobility's Infringement Contentions in *Mojo Mobility Inc. v. Samsung Elecs. Co., Ltd.*, No. 2:22-cv-00398 (E.D. Tex.) (February 28, 2023)
Ex.1023	U.S. Patent Application Publication No. 2004/0201988 ("*Allen*")
Ex.1024	U.S. Patent No. 7,378,817 ("*Calhoon-817*")
Ex.1025	International Patent Application Publication No. WO2003/096361 ("*Cheng*")
Ex.1026	International Patent Application Publication No. WO2004/038888 ("*ChengII*")
Ex.1027	Spiral Inductor Design for Quality Factor, Sang-Gug Lee et al., Journal of Semiconductor Technology and Science, Vol. 2. No. 1, March 2002 ("*Lee*")
Ex.1028	U.S. Patent Application Publication No. 2001/0055207 ("*Barbeau*")
Ex.1029	AN710 Antenna Circuit Design for RFID Applications
Ex.1030	U.S. Patent No. 6,606,247 ("*Credelle*")

Ex.1031	U.S. Patent No. 7,339,353 ("*Masias*")
Ex.1032	RESERVED
Ex.1033	U.S. Patent Application Publication No. 2005/0134213A1 ("*Takagi*")
Ex.1034	U.S. Patent Application Publication No. 2005/0135129A1 ("*Kazutoshi*")
Ex.1035	U.S. Patent Application Publication No. 2005/0270745A1 ("*Chen*")
Ex.1036	International Patent Application Publication No. WO2003/105308A1 ("*Hui*")
Ex.1037	U.S. Patent No. 5,780,992 ("*Beard-1*")
Ex.1038	RESERVED
Ex.1039	U.S. Patent No. 5,631,539 ("*Beard-2*")
Ex.1040	RESERVED
Ex.1041	U.S. Patent Application Publication No. 2005/0127868A1 ("*Calhoon*")
Ex.1042	U.S. Patent No. 8,005,547 ("*Forsberg*")
Ex.1043	U.S. Patent No. 7,791,311 ("*Sagoo*")
Ex.1044	U.S. Patent Application Publication No. 2007/0145830A1 ("*Lee-II*")
Ex.1045	RESERVED
Ex.1046	U.S. Patent Application Publication No. 2007/0026826A1 ("*Wilson*")
Ex.1047	U.S. Patent Application Publication No. 2006/0202665 ("*Hsu*")
Ex.1048	International Patent Application Publication No. WO2009155000A2 ("*Lin*")
Ex.1049	U.S. Patent Application Publication No. 2008/0067874 ("*Tseng*")
Ex.1050	U.S. Patent No. 9,356,473 ("*Ghovanloo*")

Ex.1051	Memorandum from Director Vidal (June 21, 2022)
Ex.1052	Federal Court Management Statistics (December 2022)
Ex.1053	Docket Control Order of March 28, 2023, *Mojo Mobility Inc. v. Samsung Elecs. Co., Ltd.*, No. 2:22-cv-00398 (E.D. Tex.)
Ex.1054	U.S. Patent Application Publication No. 2011/0193484 ("*Harbers*")
Ex.1055	U.S. Patent Application Publication No. 2005/0057187 ("*Catalano*")
Ex.1056	U.S. Patent No. 6,459,383 ("*Delatorre*")
Ex.1057	International Patent Application Publication No. WO1999050806A1 ("*Cunningham*")
Ex.1058	International Patent Application Publication No. WO2004026129A1 ("*Due-Hansen*")
Ex.1059	U.S. Patent Application Publication No. 2009/0261778 ("*Kook*")
Ex.1060	RESERVED
Ex.1061	International Patent Application Publication No. WO2002/37641 ("*Cho*")
Ex.1062	U.S. Patent Application Publication No. 2007/0022058 ("*Labrou*")
Ex.1063	ATMEL e5530 Data Sheet (2002)
Exs.1064 - 1074	RESERVED
Ex.1075	Watson, J., Mastering Electronics, Third Ed., McGraw-Hill, Inc. (1990) ("*Watson*")
Ex.1076	Sedra, A., *et al.*, Microelectronic Circuits, Fourth Ed., Oxford University Press (1998) ("*Sedra*")
Ex.1077	GB Patent Application Publication No. 2202414 ("*Logan*")
Ex.1078	U.S. Patent No. 7,226,442 ("*Sheppard*")

I. INTRODUCTION

Samsung Electronics Co., Ltd. ("Petitioner") requests *inter partes* review of claims 1-4, 8, and 11-12 ("challenged claims") of U.S. Patent No. 11,316,371 (Ex.1001) assigned to Mojo Mobility Inc. ("PO").

II. MANDATORY NOTICES

Real Parties-in-Interest: Petitioner identifies the following as the real parties-in-interest: Samsung Electronics Co., Ltd., and Samsung Electronics America, Inc.

Related Matter: The '371 patent is at issue in the following matter(s):

- *Mojo Mobility Inc. v. Samsung Electronics Co., Ltd.*, No. 2-22-cv-00398 (E.D. Tex.) (asserting the '371 patent and also U.S Patent Nos. 9,577,440, 11,292,349, 11,201,500, 7,948,208, 11,342,777, and 11,462,942) ("Texas Litigation").
- Petitioner is filing concurrently herewith petitions for *inter partes* review challenging other claims of the '371 patent

The '371 patent originates from U.S. Patent Application No. 17/507,323, filed on Oct. 21, 2021, which is a continuation or continuation-in-part of a sequence of applications dated as early as Jan. 30, 2007. (Ex.1001, Cover.) The '371 patent also lists multiple provisional applications dated as early as Jan. 31, 2006. (*Id.*)

Counsel and Service Information: Lead counsel: Joseph E. Palys (Reg. No. 46,508), and Backup counsel are (1) Naveen Modi (Reg. No. 46,224), (2) Howard Herr (*pro hac vice* admission to be requested). Service information is Paul Hastings LLP, 2050 M St., Washington, D.C., 20036, Tel.: 202.551.1700, Fax: 202.551.1705, email: PH-Samsung-MojoMobility-IPR@paulhastings.com. Petitioner consents to electronic service.

III. PAYMENT OF FEES

The PTO is authorized to charge any fees due during this proceeding to Deposit Account No. 50-2613.

IV. GROUNDS FOR STANDING

Petitioner certifies that the ’371 patent is available for review and Petitioner is not barred or estopped from requesting review on the grounds identified herein.

V. PRECISE RELIEF REQUESTED AND GROUNDS

The challenged claims should be canceled as unpatentable based on the following grounds:

Ground 1: Claims 1 and 4 are unpatentable under 35 U.S.C. § 103(a) as obvious over *Okada*, *Odendaal*, *Kook, Calhoon,* and *Black*;

Ground 2: Claim 2 is obvious over *Okada*, *Odendaal*, *Kook, Calhoon, Black*, and *Kazutoshi*;

Ground 3: Claim 3 is obvious over *Okada*, *Odendaal*, *Kook, Calhoon*, *Black*, and *Masias*;

Ground 4: Claim 8 is obvious over *Okada*, *Odendaal*, *Kook, Calhoon*, *Black*, and *Chen*;

Ground 5: Claim 11 is obvious over *Okada*, *Odendaal*, *Kook, Calhoon, Black*, *Kazutoshi*, *Takagi,* and *Masias*; and

Ground 6: Claim 12 is obvious over *Okada*, *Odendaal*, *Kook, Calhoon*, *Black*, and *Labrou*.

In the Texas Litigation, PO identified the following priority dates for the challenged claims (and possibly up to three months earlier):

(a) 7/30/2007: claims 1 and 12;

(b) 12/12/2007: claims 2-4, and 11; and

(c) 4/7/2008: claim 8.

(Ex.1022, 6-8.) Petitioner assumes for this proceeding (without conceding) those are the effective date(s) for the challenged claims. The asserted references qualifies as prior art as follows:[2]

[2] *See infra* §X.

Okada (published: 6/1/2006)	§102(b)
Labrou (filed: 07/18/2006; published: 01/25/2007)	§§102(a), 102(e)
Odendaal (filed: 6/26/2002; issued: 11/1/2005)	§§102(b), 102(e)
Black (filed: 12/8/2005; published: 7/6/2006)	
Chen (filed: 10/12/2004; issued: 12/8/2005)	
Calhoon (filed: 12/12/2003; published 06/16/2005)	
Kazutoshi (filed 12/03/2004; published 06/23/2005)	
Takagi (filed 11/04/2004; published 06/23/2005)	
Kook (filed: 10/25/2006; published: 10/22/2009)	§102(e)
Masias (filed: 03/10/2004; issued: 03/04/2008)	

VI. LEVEL OF ORDINARY SKILL

A person of ordinary skill in the art as of the claimed priority date of the ’371 patent (“POSITA”) would have had at least a master’s degree in electrical engineering, or a similar discipline, and two or more years of experience with

wireless charging systems, including, for example, inductive power transfer systems. (Ex.1002, ¶¶20-21.)[3] More education can supplement practical experience and vice versa. (*Id.*)

VII. THE '371 PATENT

The '371 patent claims were allowed over prior art that allegedly did not teach/suggest the claimed "communication and control circuit" and "regulat[ing]" (Ex.1004, 733-737; *see also id.*, 387-406, 632-636, 600-628, 694-727). However, those features, and others, recited in the challenged claims relate to a compilation of conventional components/features known in the prior art. *See In re Gorman*, 933 F.2d 982, 986 (Fed. Cir. 1991). (*Infra* §IX; Ex.1002, ¶¶14-297; Exs.1005-1017, 1019-1021, 1023-1031, 1033-1037, 1039, 1041-1044, 1046-1050, 1054-1059, 1061-1063, 1075-1078.)

VIII. CLAIM CONSTRUCTION

For purposes of this proceeding, Petitioner believes that no constructions are necessary to assess whether the challenged claims are unpatentable over the asserted

[3] Petitioner submits the declaration of R. Jacob Baker, Ph.D., P.E. (Ex. 1002), an expert in the field of the '371 patent. (Ex. 1002, ¶¶1-21, 22-65; Ex. 1003.)

prior art.[4] (Ex.1002, ¶68.) *Toyota Motor Corp. v. Cellport Systems, Inc.*, IPR2015-00633, Paper No. 11 at 16 (Aug. 14, 2015).

IX. DETAILED EXPLANATION OF GROUNDS[5]

A. Ground 1: Claims 1 and 4 are obvious over *Okada*, *Odendaal*, *Kook*, *Calhoon*, and *Black*

1. Claim 1

a) [1(a)][6]

To the extent limiting, *Okada* discloses this limitation. (Ex.1002, ¶¶117-125; §§IX.A.1(b)-(n).) *Okada* discloses an "**apparatus**" including a "**system**" (§IX.A.1(b)) for inductive powering/charging portable devices. (Ex.1005, Abstract, ¶¶0001, 0047.) FIG. 1 (below) shows power supply system 1 (blue) ("**apparatus**") including PC2, PDA3 (green) ("**portable device**"), and cradle 4 (red) ("**system**") (*see* limitation 1(b)). (Ex.1005, ¶¶0034-0036.)

---

[4] Petitioner reserves all rights to raise claim construction and other arguments, including §112 challenges, in district court as relevant there. *See, e.g.*, *Target Corp. v. Proxicom Wireless, LLC*, IPR2020-00904, Paper 11 at 11–13 (Nov. 10, 2020).

[5] References to non-asserted prior art demonstrate/support a POSITA's contemporaneous state-of-art knowledge.

[6] All claim language appears in the claim listing provided in Appendix A.

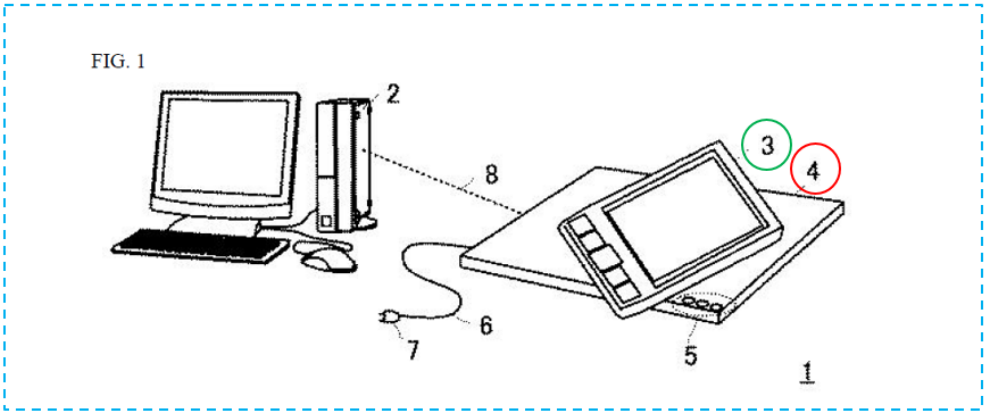

"[M]agnetic coupling" between cradle and PDA "induces voltage" in the "coil in the PDA" to "suppl[y] power to the PDA." (*Id.*, ¶0035; Ex.1002, ¶¶118-119.)

As shown in FIG. 2, cradle 4 includes a **power transmitting module 10** ("PTM10"), and PDA3 includes a **power receiving module 40** ("PRM40"). (*Id.*, ¶¶0035-0058, FIG. 8, 0110-0111; Ex.1002, ¶120.)

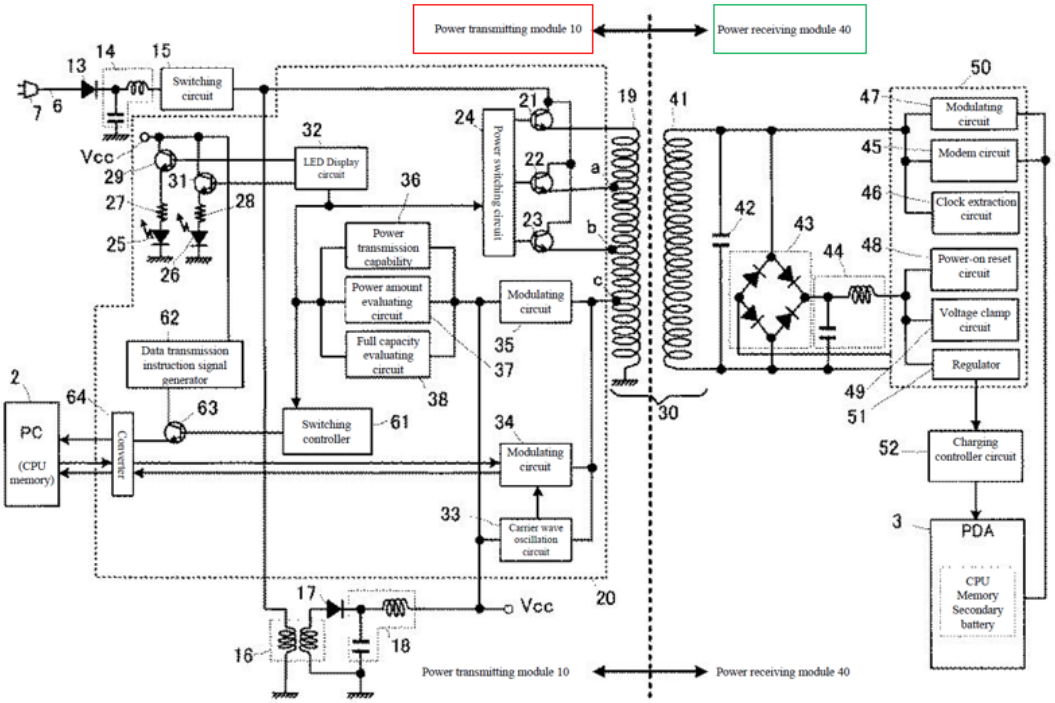

PTM10 converts received power to DC (circuits 13-14) for powering PTM10 components and inductively transferring power to PRM40/PDA3. (*Infra* §§IX.A(d)(1)-(3); Ex.1005, ¶¶0038-0040, 0049-0051, 0057, 0063-0064, 0069-0073, Ex.1002, ¶¶121-122.)

Okada discloses various configurations of such an "**apparatus**" providing similar functionalities associated with PTM10 and PRM40 (Ex.1005, FIGS. 2, 7-17, ¶¶0009-0032, 0094-0154), and applications of such features in other exemplary "**apparatus(es)**" (*id.*, ¶¶0107, 0116-0132, FIGS. 9-13(b); Ex.1002, ¶¶123-124).

FIG. 9

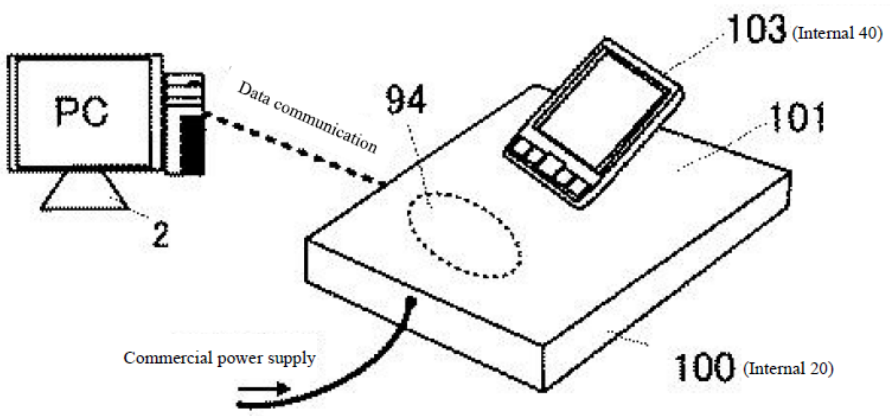

FIG. 10

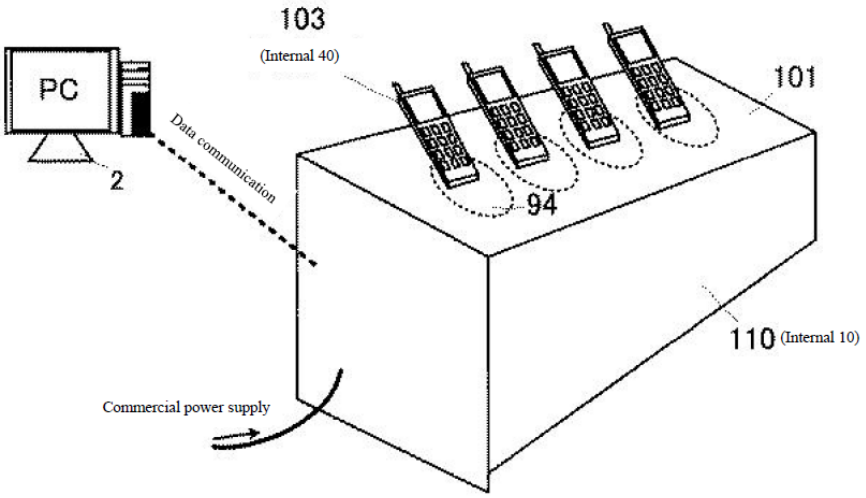
103
(Internal 40)
PC
Data communication
2
101
94
110 (Internal 10)
Commercial power supply

FIG. 11

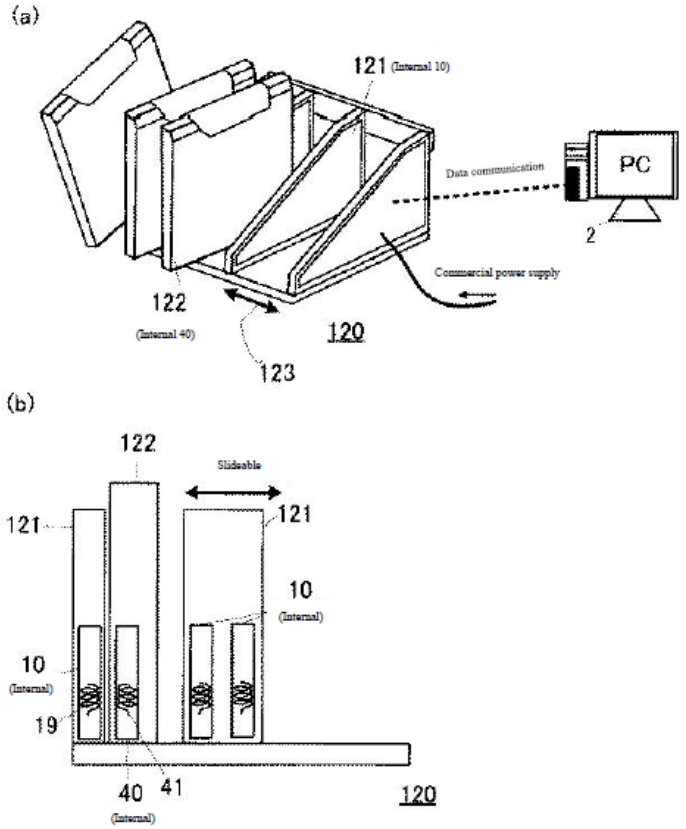
(a)
121 (Internal 10)
Data communication
PC
2
Commercial power supply
122
(Internal 40)
120
123
(b)
122
Slideable
121
121
10
(Internal)
10
(Internal)
19
40
41
(Internal)
120

FIG. 12

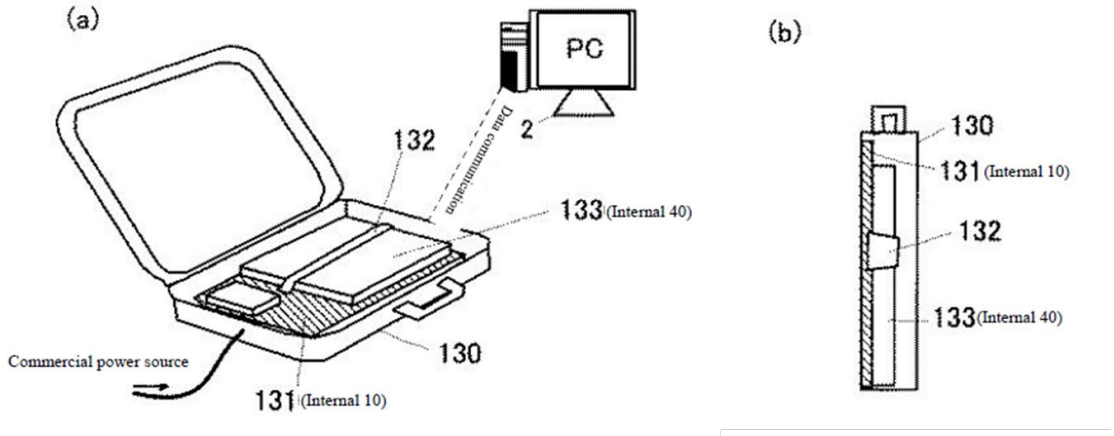
(a)
PC
2
Data communication
132
133 (Internal 40)
130
Commercial power source
131 (Internal 10)
(b)
130
131 (Internal 10)
132
133 (Internal 40)

FIG. 13

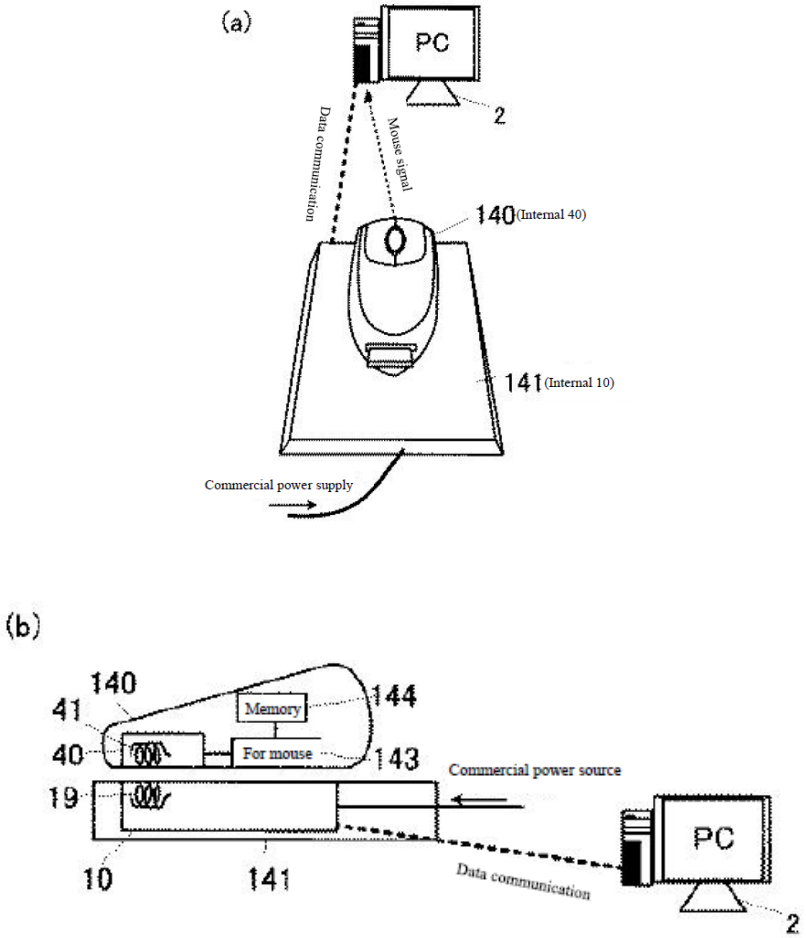
(a)
PC
2
Data communication
Mouse signal
140 (Internal 40)
141 (Internal 10)
Commercial power supply
(b)
140
41
40
19
Memory
144
For mouse
143
Commercial power source
PC
10
141
Data communication
2

FIG. 3 (below) shows "power supply operations…between [PTM10 and PRM40]" applicable to the various configurations. (Ex.1005, FIG. 3, ¶¶0059-0090; 0094-0115.) Any disclosed configuration including features recited in claim 1 (including as modified), as explained below is an "**apparatus**" (*e.g.*, FIGS 1, 2, 7, 9-13). (Ex.1005, ¶0030; §§IX.A.1(b)-(n); Ex.1002, ¶125.)

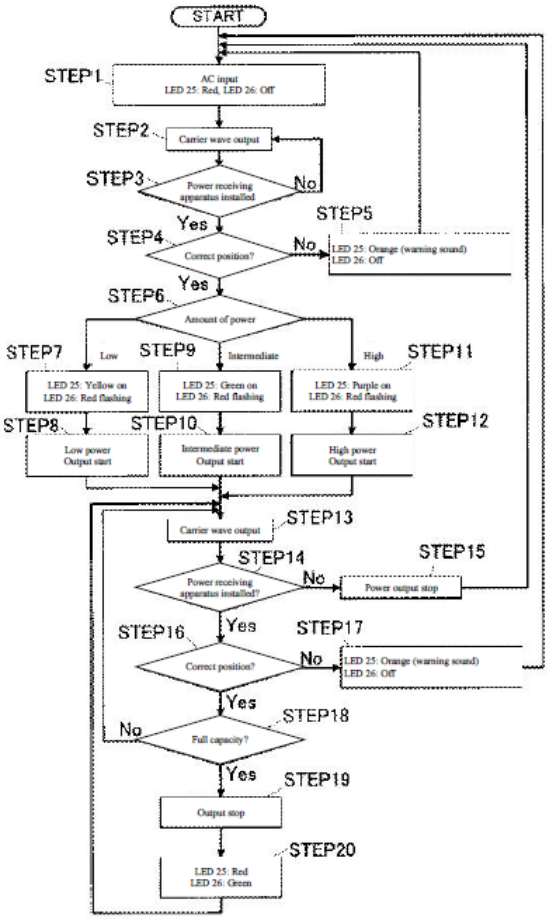

b) [1(b)]

Okada discloses this limitation. (Ex.1002, ¶¶126-127.) Cradle 4/PTM10 ("**system**") "**provid[es] power inductively**" to PDA3 ("**portable device**"). (§IX.A.1(a); Ex.1005, Abstract, ¶¶0001, 0034-0036, 0047.)

The "**portable device**" includes "**a battery and an inductive receiver unit**." PDA3 includes a "secondary battery" and PRM40. (Ex.1005, ¶¶0012, 0015, 0037, FIG. 14, ¶¶0134-0136, FIG. 15, ¶¶0138-0140, FIG. 16, ¶¶0142-0144, claim 4, FIG. 2 (**purple** below); Ex.1002, ¶127.)

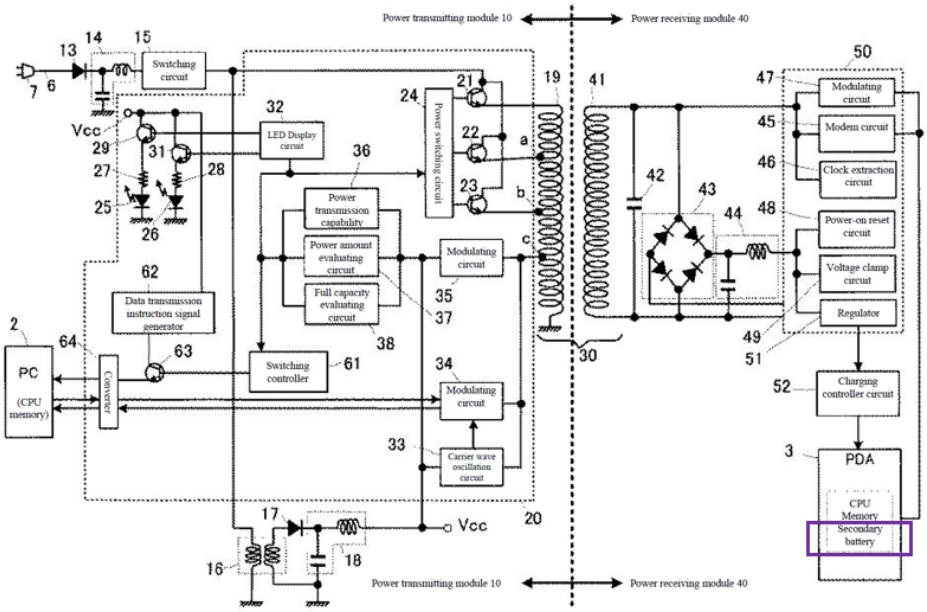

PRM40 in the portable device exemplifies an "**inductive receiver unit**" including coil 41 (**orange**) ("**receiver coil**") (Ex.1005, ¶0040) and a "**receiver circuit**" (*e.g.*, **red** below), including at least rectifier 43 (**blue**), clock/modulating circuits 46/47, and possibly include other PRM40 component(s) (other than the **battery**) (*e.g.*, 42,

44-45, 48-49, 51, and/or 52). (Ex.1005, ¶0047; Ex.1002, ¶127.)[7]

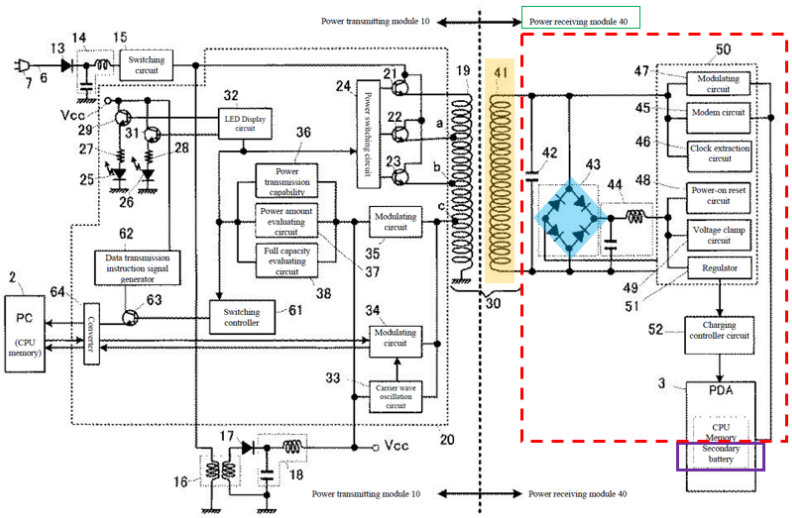

c) [1(c)]

Okada in view of *Odendaal* discloses/suggests this limitation. (Ex.1002, ¶¶128-146.)

Okada's "**system**" includes "**a first primary coil**" 19. (§§IX.A.1(a)-(b); *e.g.*, Ex.1005, FIG. 2 (**blue** below), ¶¶0040, 0050, FIG. 7, ¶¶0095-0107, FIGS. 9-10, ¶¶0116-119, FIGS. 11(a)-(b), ¶0121, FIGS. 12(a)-(b), ¶¶0123-0125, FIG. 13, ¶0132; Ex.1002, ¶129.)

[7] The annotated figures are exemplary visual aids and are not intended to be limiting.

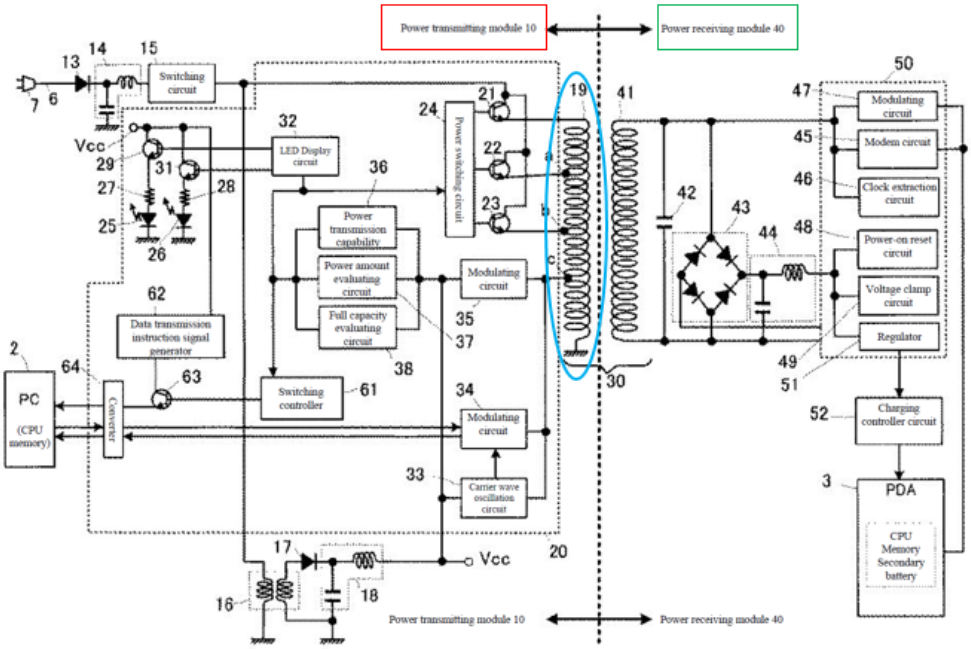

Controlled switches 21/22/23 allows primary coil 19 to **inductively provide** selected **power** to PDA3 via coil 41. (Ex.1002, ¶130; §IX.A.1(a); Ex.1005, FIG. 3, ¶¶0035, 0040, 0051, 0057, 0069-0073.)

As exemplified below, "**primary coil**" 19 (**orange**) is positioned "**substantially parallel to a surface of the system**" (**blue**/**red**). (Ex.1005, FIGS. 11(b) (left), 13(b) (right); §§IX.A.1(a)-(b).) Other exemplary system/apparatus configurations (above) have a similar arrangement. (Ex.1002, ¶131.)

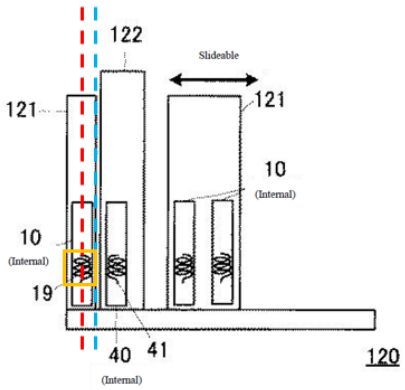

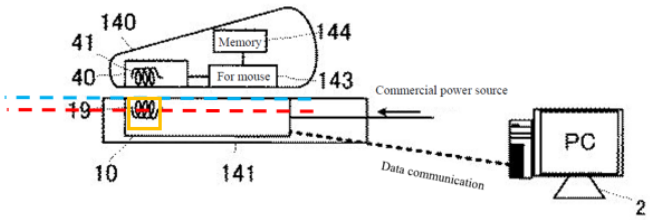

While *Okada* does not expressly state that the "**first primary coil…is *substantially planar* and substantially parallel to a surface of the system**," a POSITA would have found it obvious to configure *Okada*'s system to implement/use a planar primary coil (and secondary coil) in light of *Odendaal*. (Ex.1002, ¶132.)

Planar coils positioned parallel to a power transfer system's surface were known. (Ex.1002, ¶¶133-137; Ex.1027, 1-3; Ex.1015, FIGS. 1-2, 3-4, 7-12, Abstract, 1:5-2:29, 2:64-3:27, 3:39-51, 5:5-47, 5:48-9:5; Ex.1047, FIGS. 1-3, 6, 8A-9, ¶¶0002, 0006-0007, 0018-0034; Ex.1025, FIGS. 1, 3, 8-9, 13, 1:10-3:2, 4:19-32, 7:25-9:28, 12:27-32, 14:4-17; Ex.1026, FIGS. 1-2, 5, 9A-9C, Abstract, 1:3-9:4, 11:4-15; Ex.1009, Abstract, FIGS. 1-3, 1:4-2:26, 2:47-3:39, 4:18-60; Ex.1024, FIGS. 3, 8-9, 1:12-15, 1:39-2:29, 9:41-53, 10:45-57, 11:60-13:4; Ex.1028, Abstract, FIGS. 2-7, ¶¶0001, 0004-0007, 0025-0032, 0041; Ex.1029, 1-4, 9-19; Ex.1030, FIGS. 3-7B, 1:5-9, 1:59-61, 3:19-56, 4:62-67, 5:25-44; Ex.1036, Abstract, 2:22-3:6

("primary winding…***substantially parallel*** to…charging surface"), 5:22, 11:18, 23:20-24:8, 24:19-22.)

Aware of such coil designs (and associated tradeoffs, *e.g.*, size/weight/cost/performance), a POSITA would have been motivated to consider relevant teachings (*Odendaal*) when configuring/implementing systems like *Okada*. (Ex.1002, ¶¶50-53, 138; Ex.1047, ¶0033.)

Odendaal discloses inductive power transfer technologies/techniques, and like *Okada*, is in the same technical field as the '371 patent and discloses features reasonable pertinent to problem(s) the inventor/'371 patent (and a POSITA) was trying to solve. (§IX.A.1(a) (*Okada*); Ex.1008, Abstract, FIGS. 1A-4, 11-12, 1:5-3:57, 4:50-5:8, 5:24-28, 6:59-64; Ex.1001, Abstract, 1:54-5:17.) Such teachings thus would have been consulted in context of *Okada*. (Ex.1002, ¶¶139-140.)

Odendaal discloses known **planar-type inductor coils** (resonators) for inductive power transfer, (Ex.1008, FIGS. 1A-1B, 2A, 2C, 8E, 1:58-2:43; *id.*, 2:55-64 ("spiral-shaped conductor may comprise **pcb**…conductors"). The planar resonator includes spirals to transfer energy across the "interface-of-energy-transfer" (IOET) "in…***magnetic form***,…" to wirelessly charge a cellphone battery (*id.*, 1:60-67, 2:1-7, 2:55-64, 7-10, 2:65-3:5, 4:44-5:8, 6:1-18.) *Odendaal*'s teachings of "**planar**" coils is consistent with that known in the art (Ex.1002, ¶¶141-142; Ex.1008, 1:60-67, 2:19-21, 2:29-44, 3:65-67.) Consistent *Okada*'s thin-form

applications/configurations (e.g., charging pads/case), *Odendaal* discloses the coils are "integrated into a **planar (flat/thin) structure**" (Ex.1008, 3:3-5) and conform to the housing surface to facilitate charging a device "in close proximity" (*id.*, 2:29-44) (coils parallel to system's surface). (Ex.1002, ¶¶50-53, 142-143.)

Thus, a POSITA would have been motivated, and found obvious, to modify the *Okada* system to use a "**primary coil**" that is **"substantially planar and substantially parallel to a surface of the system**" (and accompanied such design with corresponding planar secondary coil(s) in the portable device) to expand/complement *Okada*'s thin-form configurations/applications. (Ex.1002, ¶144; §§IX.A.1(a)-(b).) Such modification would have provided options to reduce the volume the coil(s) occupy, system/device size/weight, and expanded/enhanced *Okada*'s charging applications. (Ex.1002, ¶144; §§IX.A.1(a)-(b); Ex.1005, FIGS. 1, 9, 10-16, ¶¶0033-0034, 0116-0146.) Reducing distance between primary-secondary coils would have promoted close-proximity coupling, improving power transmission efficiency, reducing energy waste, and shortening charging time. (Ex.1002, ¶¶50-53, 144-145; Ex.1008, 2:29-44; Ex.1005, ¶¶0066-0068, 0112, FIGS. 4(a)-4(b); Ex.1036, 24:19-22; §IX.A.1(d)(2).)

With such knowledge/skills, a POSITA would have considered design tradeoffs and techniques/technologies to implement the above-modification with a reasonable expectation of success. Especially since it would have involved known

technologies/techniques (*e.g.*, planar coils) that would have predictable led to, *e.g.*, thinner charger units, as contemplated by *Okada-Odendaal*. (Ex.1002, ¶146; §IX.A.1(a).) *KSR Int'l Co. v. Teleflex, Inc.*, 550 U.S. 398, 416 (2007).

d) [1(d)]

Okada-Odendaal and *Kook* discloses/suggests this limitation. (Ex.1002, ¶¶147-176.)

(1) [1(d)(1)]

Switching circuit 15 in PTM10 generates a switching pulse signal supplied to primary coil 19 via a MOSFET switch 21/22/23 ("**FET switch**") selected by switching circuit 24. (Ex.1005, ¶0049; Ex.1002, ¶¶148-164.) The signal is also converted (via circuits 16-18) to V_{CC} for powering PTM10 components. (§IX.A.1(a); Ex.1005, ¶¶0038-0040, 0046-0051, FIG. 2; Ex.1002, ¶148.) Circuits 16-18 provide power to other components, *e.g.*, circuit 33, which outputs signals driving coil 19 to send a carrier wave signal to PRM40. (Ex.1005, ¶¶0062-0063, ¶¶0010-0014, 0042-0046, 0055-0058, Claims 2-3, 6; §§IX.A.1(d)(3), IX.A.1(f)-(g).) Circuit 15 provides its signal to a switch 21/22/23, and with circuit 24, provides signals driving coil 19 to transfer power. (*Id.*; Ex.1005, ¶¶0040, 0049-0051, 0070-0073; Ex.1002, ¶0149.)

Okada's exemplary "**first drive circuit**" includes: **(1)** switching circuit 15 (including as modified below) and circuits 21-24, **(2)** same with circuits 16-18

(providing Vcc for IC 20, including circuit 24 (controlling FETs 21/22/23)), **(3)** same with circuit 33 (driving coil 19 to send carrier wave to PRM40), or **(4)** a combination of such components (with/without other circuitry in IC 20). (Ex.1005, FIG. 2 (annotated below (pink)).) The "**first drive circuit**" includes an "**FET driver**" (*e.g.,* switch 15, circuit 24, and/or one or more of circuits 16-18, or a combination of such components) and "**a FET switch**" (*e.g.*, switch 21/22/23). (Ex.1002, ¶150.)[8] These components forming the "**first drive circuit**" are coupled to rectifier/smoothing circuits 13/14 (providing a "DC voltage") (Ex.1005, FIG. 2, ¶0038, FIG. 17, 0148-0149 (battery 181 input)) thus coupled to a "**DC voltage input**" and also (directly/indirectly) coupled to coil 19 ("**first primary coil**") (Ex.1005, FIG. 2, ¶¶0039-0049; Ex.1002, ¶150).

[8] *Okada*'s circuitry is similar to drive circuitry in the '371 patent. (§IX.A.1(a); Ex. 1001, 22:45-49, 24:3-4, 41:38-47, 44:5-6.) (Ex. 1002, ¶150.)

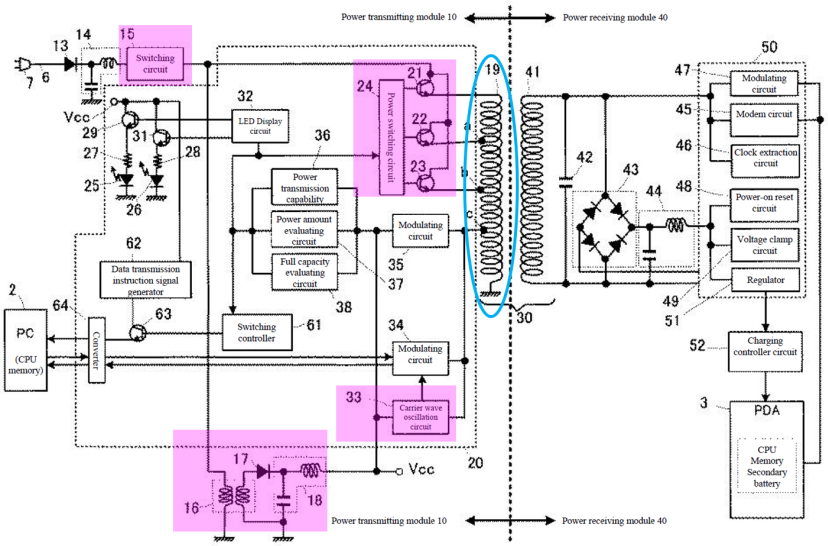
Power transmitting module 10
Power receiving module 40
Switching circuit
LED Display circuit
Power switching circuit
Power transmission capability
Power amount evaluating circuit
Full capacity evaluating circuit
Modulating circuit
Data transmission instruction signal generator
Switching controller
Carrier wave oscillation circuit
PC
(CPU memory)
Converter
Vcc
Modulating circuit
Modem circuit
Clock extraction circuit
Power-on reset circuit
Voltage clamp circuit
Regulator
Charging controller circuit
PDA
CPU
Memory
Secondary battery

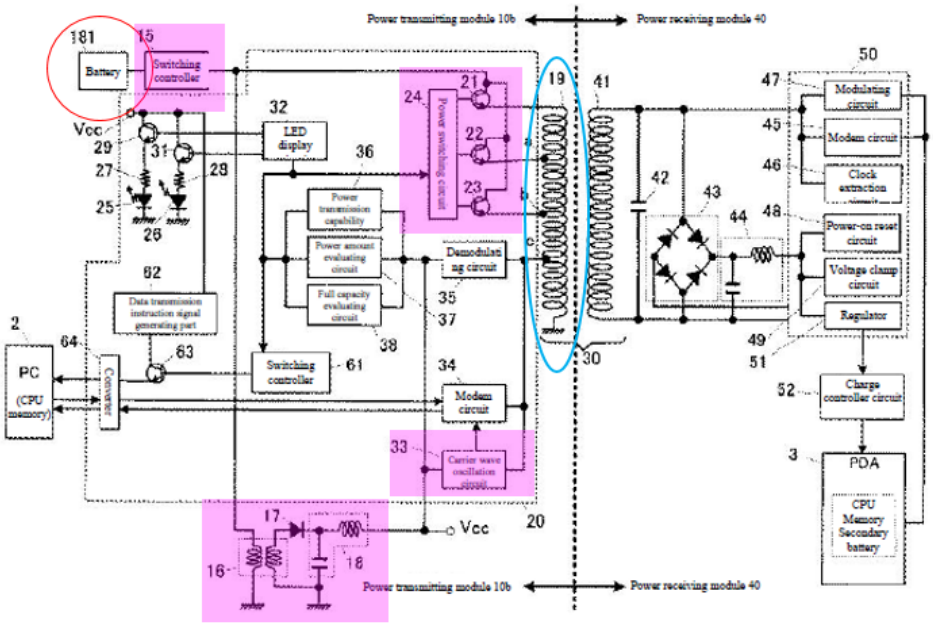
Power transmitting module 10b
Power receiving module 40
Battery
Switching controller
LED display
Power switching circuit
Power transmission capability
Power amount evaluating circuit
Full capacity evaluating circuit
Demodulating circuit
Data transmission instruction signal generating part
Switching controller
Modem circuit
Carrier wave oscillation circuit
PC
(CPU memory)
Converter
Vcc
Modulating circuit
Modem circuit
Clock extraction circuit
Power-on reset circuit
Voltage clamp circuit
Regulator
Charge controller circuit
PDA
CPU
Memory
Secondary battery

While *Okada* does not expressly disclose the drive circuit(s) having a "**capacitor,**" it would have been obvious to modify the *Okada-Odendaal* system to include such features in light of *Kook*. (Ex.1002, ¶151.) A POSITA would have consulted *Kook* at least because it is in the same technical field as the '371 patent and *Okada*, and reasonably pertinent to problem(s) the inventor/'371 patent (and POSITA) was trying to solve. (*Id.*; Ex.1001, Abstract, 1:54-5:16; §§IX.A.1(a)-(c); Ex.1059, Abstract, ¶¶0009, 0035, 0041, 0049.)

Kook discloses "a non-contact charger" for "charging battery-pack of a mobile device." (Ex.1059, Abstract, ¶¶0001, 0006, 0037-0042.) Charger 1 (blue below) receives power from computer 100 to power/charge mobile device 300 having a battery pack 200/battery 230 (yellow), via primary coil 70/secondary coil 80 (orange). (Ex.1059, ¶¶0015, 0032, 0036-0037, FIG. 1 (below).)

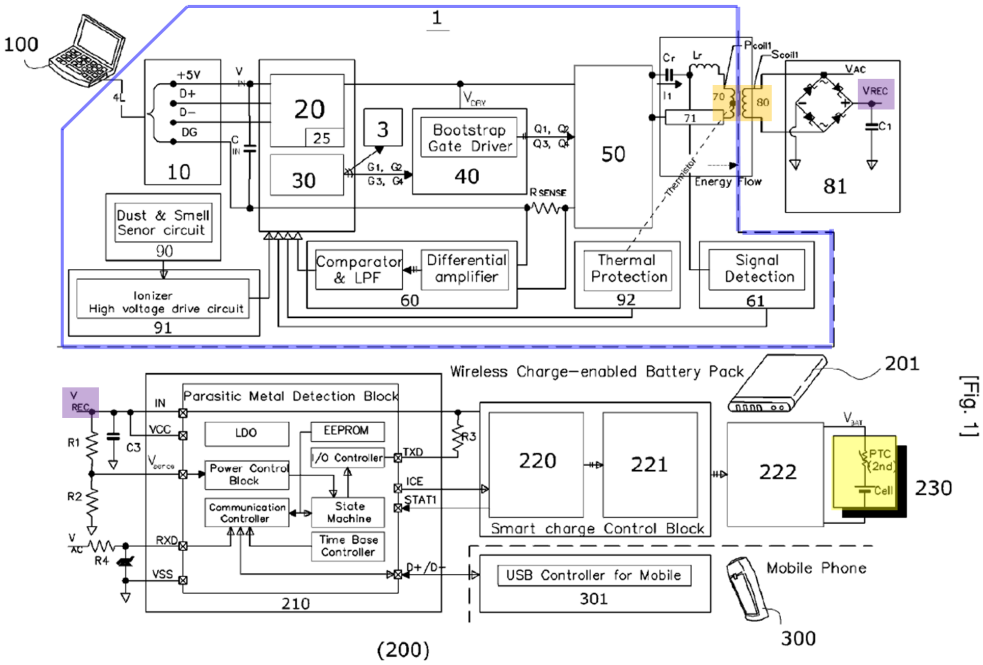

[Fig. 1]

MPU 30 controls charger 1's "internal elements" (Ex.1059, ¶0041), and includes gate drive block 40 (magenta below) and serial resonator converter 50 (*e.g.*, LLC full/half-wave type serial resonator converter (green)), a "**C-L resonator**" (red), and current sensing block 60 (blue). (*Id.*, ¶¶0032-0035, 0041; Ex.1002, ¶¶152-153.)

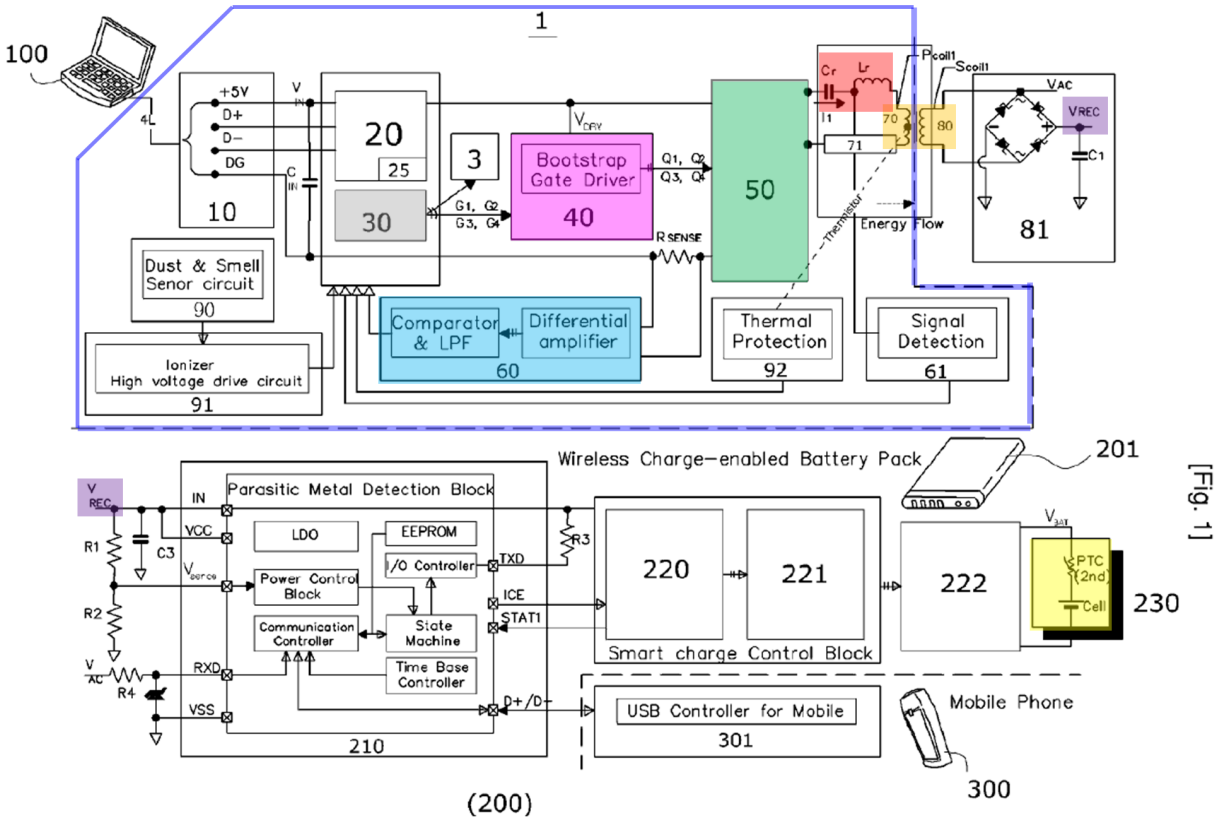

[Fig. 1]

The "C-L resonator" coupled to primary coil 70, including "**capacitor**" Cr "induce[s] LC resonance," "make[s] an electric current into a sine wave and transmit[s] an electric power to the secondary side by means of the inductive coupling." (Ex.1059, ¶¶0041, 0049, FIG. 1; Ex.1002, ¶154.) Consistent with contemporaneous knowledge and *Kook*, a POSITA would have understood such a capacitor-based circuit allows the coil to transmit less-distorted and efficient signals (*e.g.,* sine wave) with reduced harmonics. (Ex.1002, ¶¶57-65, 154.) Indeed, capacitor-based circuits (as in *Kook*) was known to improve signal transmissions (*e.g.*, minimizing/reducing unwanted radiations and heat issues caused by

harmonics, etc.) (Ex.1002, ¶¶57-65, 154-155; Ex.1016, 631, 641, 798, ("**blocks out…harmonics**"); Ex.1013, (capacitor/switches reducing harmonics from primary coil), FIGS. 3 (annotated below), 6, 3:29-4:5, 4:19-5:7, 7:24-8:14, 8:17-23, 24-31, 9:26-12:27); Ex.1008, 2:16-19; Ex.1001, 22:13-30 (harmonics are "undesirable").)

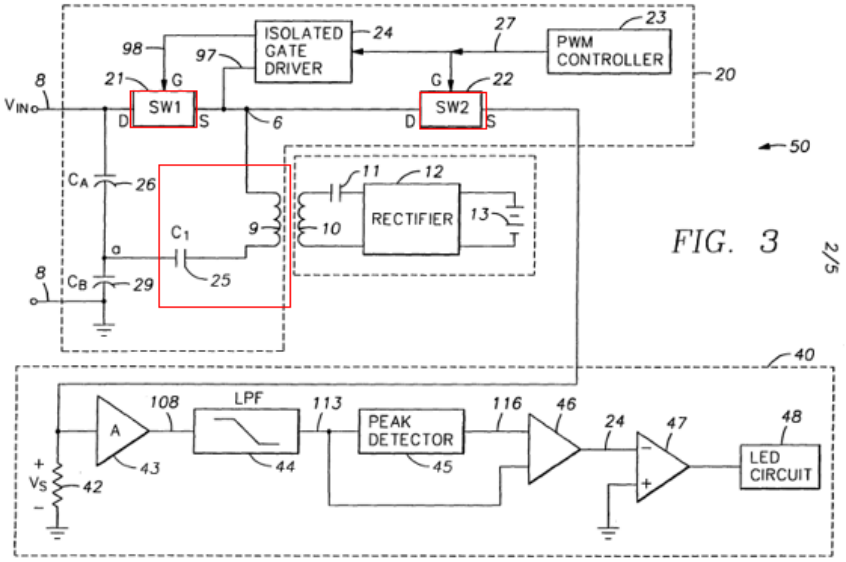

(*See also* Ex.1012, FIGS. 2, 5, 8, 3:30-62, 8:47-9:51; Ex.1014, 62-68; Ex.1015, FIGS. 1-2, 5-12, Abstract, 1:55-2:10, 3:28-51, 4:22-44, 5:45-6:4; Ex.1020, Abstract; Ex.1021, ¶¶00164-0165; Ex.1029, 22-25; Ex.1002, ¶¶155-156.)

Based on such teachings/knowledge, a POSITA would have been motivated to consider/implement a capacitor with the "**drive circuit**" in the modified *Okada-Odendaal* system to improve power transmission. (*Id.*; Ex.1002, ¶157.) A POSITA would have had the skill/rationale and expectation of success to configure/implement such modification, especially given the known use of, and

benefits from, capacitor-based filter circuits to enhance the transmission efficiency in inductive power transfer systems. (Ex.1002, ¶¶57-65, 157.) A POSITA would appreciated that, *e.g.*, a capacitor-based circuit/filter positioned between switches 21/22/23 and primary coil 19, or between circuit 15 and switches 21/22/23, (each part of "**drive circuit**") would have achieved such benefits (*e.g.*, reduced harmonics). (*Id.*, ¶157.)

A POSITA would have also recognized other advantages/benefits from *Kook*'s teachings in context of *Okada* (relevant to features in *e.g.*, limitations 1(d)(3), 1(l), discussed below (§§IX.A.1(d)(3), IX.A.1(l)). While capable of adjusting power levels based on device power requirements at the **onset** of a charging process, *Okada* does not expressly indicate controlling power levels **during** charging. (Ex.1005, ¶¶0069-0076, FIG. 3.) However *Kook*'s teachings would have motivated a POSITA to modify the *Okada-Odendaal* system to include such features. (Ex.1002, ¶158.)

Kook describes feedback-controlled functionalities to adjust a charger circuit's operating frequency, to control charging power/voltage to the portable device **during** charge/power transfer. (Ex.1002, ¶159.) *Kook* discloses current sensing block 60 for "stably controlling an electric power through a current **feedback** using an automatic variation algorithm of **primary** frequency so as…to control a voltage of a **secondary** rectification terminal in the charging battery-pack 200." (*Id.*, ¶¶0041, FIG. 1.) Block 60 analyzes "a signal of the secondary coil 80 to

recognize the mobile device 300, monitor the primary coil 70 and the secondary coil 80 to control a charge voltage to a stable voltage." (*Id*., ¶¶0033, 0047, 0083; Ex.1002, ¶159.)

A POSITA would have understood that resonator converter 50 includes switching FETs and a capacitor. (Ex.1002, ¶160.) *Kook* describes "bootstrap ***gate*** drive block 40" providing four signals Q1-Q4 to serial resonator converter 50. (Ex.1059, FIG. 1, ¶¶0009, 0032-0035, 0041.) Such signals necessarily control corresponding "**gates**" of associated **FET** switches in converter 50 since only FET switches have "gate(s)" (unlike a BJT) and *Kook* discusses "switching" in relation to converter 50. (Ex.1002, ¶160; Ex.1059, ¶¶0049, 0075.) The "LLC" serial resonator converter (Ex.1059, ¶¶0009, 0041, 0033, 0064) discloses a **capacitor** ("C") with inductors ("LL"). (Ex.1002, ¶160.)

In light of such teachings/suggestions, a POSITA would have been further motivated, and found obvious, to configure the above-modified *Okada* system such that the switching circuit 15 and/or other components (part of the "**drive circuit**") to implement an "**FET driver**," "**FET switch**," and a "**capacitor**" coupled to the primary coil of the "**system**," similar to teachings from *Kook*, to improve/enhance power transmission control during charging, by adjusting the switching/operating frequency of the primary circuitry in response to current feedback information, while providing efficient power transfer via capacitive filtering. (Ex.1002, ¶161.) A

POSITA would have appreciated *Kook*'s guidance, describing a closed-loop feedback arrangement, where powering/charging is controlled through current feedback by varying the primary-side circuit operating frequency using FET driver/switch/capacitor-based circuitry.[9] (*Id.*, ¶161; Ex.1059, ¶¶0033, 0041, 0047, 0083.)

Such a configuration would have improved/complimented the *Okada-Odendaal* system, which also uses device information to control/adjust power delivery in a closed-loop feedback fashion, but does so at the onset of charging, not during charging. (Ex.1005, ¶¶0069-0076, FIG. 3; §§IX.A.1(a)-(c).) Implementing such features would have provided a stabilized voltage for the battery/mobile device, for controlled/efficient power transfer/consumption during charging. (Ex.1002, ¶162.)

A POSITA would have had the skill/rationale and expectation of success to achieve such modifications, especially since the use of capacitor(s) and closed-loop feedback power delivery control technologies/techniques was known (*e.g.*,

[9] A POSITA would have appreciated configuring the "drive circuit" in the modified *Okada* system to use "FET switches/FET driver" circuitry with the modified switching circuit 15 to accommodate frequency adjustment features discussed above. (Ex. 1002, ¶¶163-164.)

Okada/Kook). (Ex.1002, ¶163.) Applying such known technologies/techniques (*e.g.*, FET-based drive circuitry in closed-loop feedback system with capacitive filtering) would have predictably led to the modified system ensuring sufficient power is available to charge portable device with energy-efficient continuous power transfer with reduced heat waste and signal distortion. (Ex.1002, ¶163.) *KSR* at 416-18.

There were various ways for a POSITA to implement such modifications. (Ex.1002, ¶164.) For example, in addition to an appropriately designed/positioned capacitor-based circuit/filter (*supra*), a POSITA would have been motivated to configure/leverage features/components in *Okada*'s system used to receive/pass/process device information for controlling power transfer (*e.g.*, demodulator 35, circuits 36-38 (Ex.1005, ¶0064; §§IX.A.1(e)-(m)). (Ex.1002, ¶164.) A POSITA would have recognized/appreciated the benefits of configuring the system to receive current feedback information/signals (*e.g.,* via demodulator 35, circuit(s) 36/37/38), modified switching circuit 15) to vary the operating frequency of the "drive circuit" to control a voltage output by rectifier circuitry 43 in PRM40 used to charge/power the battery. (Ex.1002, ¶164; *infra* §§IX.A.1(e)-(m).)[10]

[10] Other successful designs/configurations would have been contemplated to achieve the same functionalities. (Ex. 1002, ¶164.)

(2) [1(d)(2)]

The *Okada-Odendaal-Kook* combination discloses/suggests this limitation. (Ex.1002, ¶¶165-170; §§IX.A.1(a)-(d)(1).)

As discussed, the *Okada-Odendaal-Kook* system includes a "**drive circuit**" (with FET driver, FET switch, capacitor) having current-based closed-loop feedback control to adjust the power/voltage used to charge the portable device battery by adjusting operating frequency on the primary side. (§IX.A.1(d)(1).) In light of *Kook-Okada,* a POSITA would have understood such drive circuit, during operation, would have provided an alternating electrical current to coil 19 at an "**operating frequency and duty cycle**," consistent with *Kook*'s teachings. (Ex.1002, ¶166; Ex.1059, ¶¶0041, 0047, 0083 ("AC current"); §IX.A.1(d)(1); Ex.1005, ¶¶0110-0111.)

A POSITA would have also understood that the ac signal applied to the modified *Okada* system's planar primary coil(s) would have generated a "**substantially perpendicular**" "**alternating magnetic field**", as a natural result of activating the planar coil to inductively transfer power to PDA3 as described by *Okada-Odendaal-Kook*. (Ex.1002, ¶¶35-53, 167-168; Ex.1005, ¶¶0035, 0051, 0056, 0063-0066, 0121-0132, FIGS. 11(b)/13(b); Ex.1059, ¶¶0032-0042; §IX.A.1(c); Ex.1011, 557-562, 593-594, 601; Ex.1009, 2:62-3:8, 1:54-2:18, 3:20-

4:11, FIGS. 1-3; Ex.1010, FIGS. 1-10, 7:21-10:22, 11:27-14:67; Ex.1029, 3-4, 27-50); Ex.1019, FIG. 2B, ¶¶0027, 0064.)

A POSITA would thus have understood the planar primary coils in the *Okada-Odendaal-Kook* system, when inductively providing power via planar coils 19/41 (§IX.A.1(c)), would have likewise generated a magnetic field substantially perpendicular to the plane of coil 19 and the system's surface. (Ex.1002, ¶¶35-53, 168-170; Ex.1011, 558, 559 ("magnetic field…perpendicular to the plane of [wire] loop"), 562-564, 592; Ex.1048, Abstract, FIGS. 1-6, 1:28-2:4, 2:27-3:14, 4:11-24, 5:23-6:15, claims 1-88; Ex.1049, Abstract, FIGS. 1, 5-6, 9, 11-12, 24-26, ¶¶0008-0010, 0044-0051, 0065-0066; Ex.1050, Abstract, FIGS. 1-5, 9A-9C, 5:22-6:45, 11:22-33, 12:28-38, 16:25-18:3.)

(3) [1(d)(3)]

The *Okada-Odendaal-Kook* combination discloses/suggests this limitation. (Ex.1002, ¶¶171-176.)

Consistent with that discussed above (§§IX.A.1(d)(1)-(2)), a POSITA would have been motivated, and found obvious, to configure the modified system's "**drive circuit**" to provide a sine-wave-type signal to coil 19 coupled to a resonating circuit (*e.g.*, C-L circuit), based on circuitry/techniques consistent with those taught by *Kook*, *e.g.*, a serial resonator converter type circuitry that "induce[s] **LC resonance**" to provide "a sine wave" to a primary coil coupled to a "**C-L resonator**."

(§IX.A.1(d)(1); Ex.1059, ¶¶0032-0035, 0047, 0055, 0081.) *Kook* describes the "**switching frequency** [may be] set to a higher level than the **resonant frequency**" (Ex.1059, ¶0049) and that "resonator converter 50…may operate at a lower **switching frequency** than a **resonance frequency**" to reduce "switching loss of the [secondary rectifier] diodes." (*Id.*, ¶0075.) A POSITA would have understood that the *Kook*'s resonant frequency is that of a circuit including at least the primary coil and associated capacitor, *e.g.*, Cr of C-L resonator and/or capacitor of [LLC full-bridge] serial resonator converter 50 ("**a resonance frequency of a circuit comprising the first primary coil and the capacitor**") as *Kook* discloses transmitting power from the primary coil using the resonance converter to "induce **LC resonance**." (Ex.1002, ¶¶24-43, 172; Ex.1059, ¶0049.) The above-modified *Okada* system (implementing resonance C-L circuitry and frequency-based switching operations (§§IX.A.1(d)(1)-(2)) would have been configured to provide similar features for reasons explained in context of *Kook*. (*Id.*; Ex.1002, ¶172.)

Likewise, consistent with *Kook*, a POSITA would have been motivated, and found obvious, to configure the above modified "**drive circuit**" to apply a current to coil 19 at an operating frequency "**within a range of frequencies**" that are "**near**" the "**resonance frequency**" set by the above-discussed resonance circuit (L-C circuit) in the modified system to effectively filter unwanted harmonics (*Supra*; §§IX.A.1(d)(1)-(2)Ex.1002, ¶173.)

Consistent with such teachings/knowledge, a POSITA would have designed/configured the L-C circuit in the modified *Okada* system to filter signals having frequencies higher than the resonance frequency (relating to unwanted harmonics). (Ex.1002, ¶¶57-65, 174.) A POSITA would have understood as a natural result of the operating frequency provided by the modified "driver circuit" being increased (including the operating frequency adjustment discussed above (§§IX.A.1(d)(1)-(2)) and within the range of frequencies that would produce a sine wave signal or "near" the resonance frequency noted above), at least some of the fundamental sine wave signal (non-harmonics signal) would be filtered by the LC circuit, causing a signal having reduced strength (in terms of its voltage/current, due to increased impedance) being transmitted to the portable device's receiver circuit (§IX.A.1(b)). (*Supra*; Ex.1002, ¶174; Ex.1008, 5:33-55.) Thus, the output signal induced at the output of "receiver circuit" (provided to portable device battery) in modified *Okada* would have a corresponding lower voltage/current, consistent with that recited in part "**(ii)**" of limitation 1(d)(3). (Ex.1002, ¶174; §IX.A.1(b).) A POSITA would have therefore been motivated, and found obvious, to configure the *Okada-Odendaal-Kook* system to implement closed-loop feedback-controlled frequency-switching power delivery (consistent with above and limitation 1(d)) based on device information to provide appropriate power to accommodate changes in PDA3's load during power/charging operations. (§§IX.A.1(a)-IX.A.1(d)(2);

supra; Ex.1002, ¶174.)

The modified *Okada-Odendaal-Kook* system (and its "**drive circuit**") likewise would have been configured (and thus discloses/suggests) operating within the above-described range of frequencies that result in wirelessly powering/charging of the device's battery. (Ex.1002, ¶175.) As discussed, *Okada-Odendaal-Kook* would have been configured to improve power transmission control by adjusting the switching/operating frequency of primary-side circuitry, *e.g.*, including the "dri**ve circuit**" with modified switching circuit 15, while providing efficient power transfer via capacitive filtering during powering/charging of the battery. (§§IX.A.1(d)(1)-(2), IX.A.1(a)-(c).)

The switching signal provided by circuit 15 is converted to a V_{CC} to power PTM10 components (*e.g.*, circuit 33, which generates "a…carrier wave at a certain interval" for PRM40). (Ex.1005, ¶¶0039, 0056-0057; §§IX.A.1(a)-(b), IX.A.1(d)(1).) A DC signal "generated by a carrier wave…can be **used as a driving power source**" for circuits 46/47 in PRM40's "**receiver circuit**." (Ex.1005, ¶0058; §IX.A.1(b).) During power transmission, the carrier wave is periodically transmitted to PRM40 to generate/send back device information that PTM10 uses to determine whether PDA3 is present/properly positioned. (Ex.1005, FIG. 3, ¶¶0074-0075.) Only then does PDA3 receive power until fully charged—determined using the "periodically transmitted" carrier wave. (Ex.1005, FIG. 3, ¶¶0074-0076.) For

reasons explained, a POSITA would have been motivated to configure the above-modified *Okada-Odendaal-Kook* system to include similar features to "**allow activation and powering of the receiver unit and charging the battery of the portable device**." (*Supra*; Ex.1002, ¶176.)

e) [1(e)]

The *Okada-Odendaal-Kook* combination discloses/suggests this limitation. (Ex.1002, ¶¶177-185; §§IX.A.1(a)-(d).)

Limitation 1(g) below (§IX.A.1(g)) recites "detect, **through the first sense circuit**…information in the **current modulation** in…primary coil").) As explained, the carrier wave sent to PRM40 results in a modulated signal including device information being generated/transmitted back to PTM10 via coils 41/19. Circuit 35 "**demodulates modulated** signals included with the voltage from" coil 19, which is evaluated by circuits 36/37/38 according to *Okada*'s power transfer operations. (Ex.1005, FIG. 3, ¶¶0042, 0060-0077.) Thus, circuit 35 discloses a "**first sense circuit**" given it senses/receives/demodulates a modulated response signal from PRM40 via coil 19. (Ex.1005, FIG. 2, ¶¶0050, 0064, 0069, 0076; Ex.1002, ¶178.)

Okada's teachings are consistent with PO's litigation assertions pointing to a demodulator for the claimed "**sense circuit**." (Ex.1018, 25-26 ("**demodulation** circuitry"), 27, 29.)[11]

Okada explains that the modulation method may be based on "periodic intensity modulation of a carrier wave and may use a phase modulation method to express 0/1 information via phase change information of a signal." (Ex.1005, ¶0058.) To the extent that *Okada-Odendaal-Kook* does not disclose "a first sense circuit to **monitor current flow** through the first primary coil during operation of the first drive circuit, wherein the first sense circuit…[detects] a signal corresponding to **a current modulation in the first primary coil induced by modulation of current in the receiver coil**," a POSITA would have found it obvious to implement such features. (Ex.1002, ¶179.)

Modulating/demodulating a waveform (as discussed in *Okada*) and sensing communications based on monitoring an inherent property of the waveform (*e.g.*, current) to detect/sense/process information contained therein during charging operations (operation of the drive circuit) would have been one of "a finite number of identified, predictable solutions" for including/encoding/decoding information

[11] Petitioner does not concede any accused feature/instrumentalities meet this/any claim limitation.

from the portable device in the modified system, *e.g.*, information used to confirm power reception equipment, full charge, and/or power level used to verify presence/alignment of coils, consistent with that disclosed by *Okada*. (Ex.1002, ¶180; Ex.1005, ¶¶0056-0057, 0062-0064.) *KSR* at 421. A POSITA would have been motivated to configure the modified *Okada* system to provide current modulation/demodulation-type techniques/technologies (including current sense circuit(s) that monitor current flow in primary coil 19) to facilitate the communication of information from the secondary side coil, consistent with that known in the art. (Ex.1002, ¶180; Ex.1056, Abstract, 2:7-9, 2:38-44, 4:21-34, 5:12-14, 6:12-33; Ex.1057, 9:20-24, 15:16-21, 21:21-22:3, FIGS. 1-3, 11-13; Ex.1058, Abstract, FIGS. 1, 3A-8, 3:25-4:35, 5:27-7:23, 10:22-24, 10:25-12:17; *infra* §IX.A.1(g); Ex.1001, 24:32-45; Ex.1063; Ex.1002, ¶180.)

Okada describes verifying PDA3's presence by measuring intensity of the signal(s) from primary coil(s) 19 and secondary coil 12. (Ex.1005, FIGS. 4(a)-4(b), ¶¶0066-0068, 0074-0076, FIG. 8 (current sensor 91), 0110 ("**current measuring sensor**"), 0111.) A POSITA would have found it obvious to configure/implement such current sensing/detecting/modulation/demodulation features in the *Okada-Odendaal-Kook* system for detecting communications of the modulated information signal from coil 19 (detected as current corresponding to current modulation in coil 19 induced from the current modulation via coil 41) so that it is timely/properly

detected/demodulated/used to verify that PDA3 is "placed in a correct position" and "capable of data transmission and reception." (*Id.*, ¶0080, FIGS. 3, 8, 4(a)-4(b), ¶¶0081-0082; Ex.1002, ¶181.) A POSITA would have been motivated to implement such a modification in light of *Okada*'s teachings, *e.g.*, using signal intensity and sensed current in coil 19 for determining/verifying PDA3 presence, and state-of-art knowledge (*supra*). A POSITA would have considered various ways of configuring the modification, *e.g.*, configuring the "sense circuit(s)" associated with current sensors 91, demodulation circuit 35, and/or other components to allow PTM10 to monitor the current flow through coil(s) 19 to sense/detect communications from PRM40 via coil 41, consistent with known current modulation/demodulation techniques as explained. (Ex.1002, ¶181.)

A POSITA would have had the requisite skills and rationale to design/implement such "**sense circuit…**" and related current modulation/demodulation-type features in the *Okada-Odendaal-Kook* system, and done so with a reasonable expectation of success given *Okada*'s teachings and POSITA's contemporaneous knowledge. (Ex.1002, ¶182.) Especially since such modification would have involved applying known technologies/techniques (*supra*) to predictable yield an inductive power transfer system that senses/detects communications received by coil 19 via known current modulation/demodulation

techniques in the *Okada-Odendaal-Kook* system. (Ex.1002, ¶182; *infra* §§IX.A.1(f)-(n).) *KSR*, 550 at 416.

While *Okada* does not expressly disclose "the first sense circuit includes **a low pass filter and an amplifier to *assist* in detecting and amplifying a signal**…," it would have been obvious to implement such features in view of *Kook*. (Ex.1002, ¶183.) *Kook* discloses that charger 1 includes **current sensing block 60** (blue in FIG. 1 below) that **monitors primary coil 70** to receive signals and associated information. (Ex.1059, ¶¶0008, 0010, 0032-0033, 0041, 0045.)

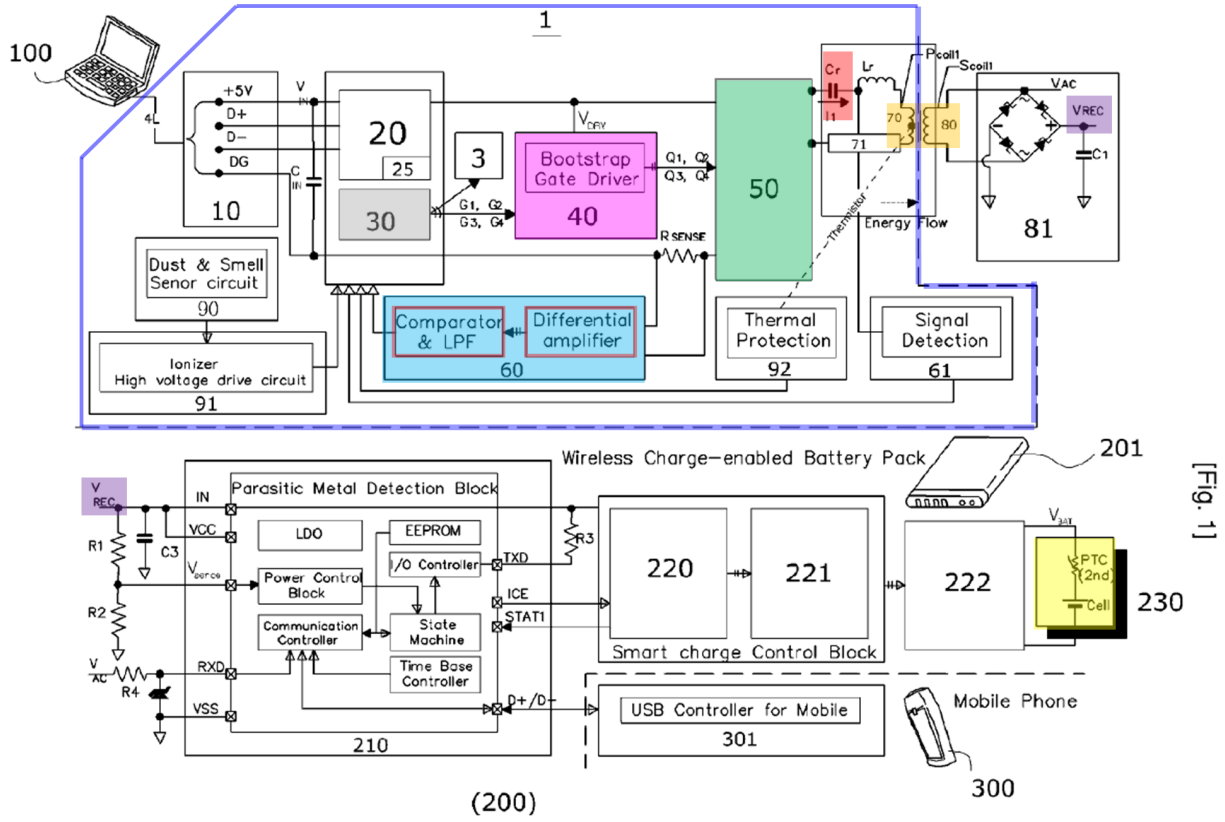

Current sensing block 60 includes a differential "**amplifier**" and a "LPF" ("**Low Pass Filter**" (red above)). A POSITA would have understood that that the "LPF" and "amplifier" would "**assist in detecting and amplifying a signal**" from a primary coil because it was known that an amplifier increases signal strength and a LPF reduces impacts of unwanted noise/distortion for optimizing signal detection/sensing. (Ex.1002, ¶183.)

Thus, a POSITA would have been motivated to configure the "sense circuit" in the modified *Okada* system (*e.g.*, circuit 35) to include amplifier/LPF circuitry to provide similar features like that suggested by *Kook*'s current sensing block 60 (*e.g.*, amplifying/filtering the signal received by circuit 35 to ensure proper/efficient demodulation of the current-modulated information signal(s) sent by coil 41 in the receiver circuit. (Ex.1002, ¶184.)

A POSITA would have had the requisite skills/rationale to design/implement such features in the above modified *Okada-Odendaal-Kook* system, and done so with a reasonable expectation of success given the teachings of *Okada-Kook* in context of a POSITA's contemporaneous knowledge. (Ex.1002, ¶185.) Especially since such modification would have involved applying known technologies/techniques (e.g., known signal enhancement/processing and filter technologies/techniques to predictably yield an inductive power transfer system having an optimized/improved sense circuit (through the use of known LPF and

amplifier (*Kook*)) for monitoring current flow through the primary coil in accordance with the above-modified *Okada-Odendaal-Kook* system. (*Supra*; §IX.A.1(d); Ex.1002, ¶185.) *KSR*, 550 at 416.

f) [1(f)]

The *Okada-Odendaal-Kook* combination discloses/suggests this limitation. (Ex.1002, ¶¶186-191.)

Circuit 33 provides a carrier wave to PRM40 causing responsive device information from PRM40's circuit 47 via coils 41-19 to be received/processed by demodulator 35. (§§IX.A.1(b), 1(d)(3)); Ex.1005, ¶¶56-57, 0062-0064.) Circuits 36-38 "perform various decision-making processes based on information included in the signal demodulated by…circuit 35." (Ex.1005, FIG. 2, ¶0042, FIG. 3, ¶¶0060-0077.) Those circuits control power transmission processes (FIG. 3) by providing signals to circuit 24 that controls/selects switches 21/22/23 (part of "**first drive circuit**"). (Ex.1005, FIG. 3, ¶¶0057-0076; §§IX.A.1(a), (d)(1).) Circuits 36-38 provide a signal to switching control 61 (Ex.1005, ¶0045) determining whether "data can be **transmitted and received**" (*id.*, ¶¶0081-0085) and whether PDA3's charge capacity exceeds a "minimum capacity" for it to transmit/receive data (*id.*, ¶¶0082-0089, FIG. 6). Circuits 36-38 control LEDs 25-26 that communicates charging status to a user. (*Id.*, ¶¶0041, 0053-0055, 0061, 0069-0072, 0077, FIG. 5; Ex.1002, ¶187.)

Thus, one or more circuits 36/37/38 disclose "**a communication and control circuit** [FIG. 2, **yellow** below]…**coupled to the first drive circuit** [*e.g.*, §IX.A.1(d)(1) pink] **and the first sense circuit** [§IX.A.1(e), 35 blue]" as claimed. (*Supra*; Ex.1002, ¶188; Ex.1005, FIG. 2; *infra* §§IX.A.1(g)-(n).) Other components may be included in such claimed "**communication and control circuit**," *e.g.*, switching controller 61, signal generator 62, controller 64, and/or "switching controller 73" in the multi-coil arrangement of FIG. 7 "system," (Ex.1005, FIG. 7 (**yellow** below), ¶¶0094-0115.)

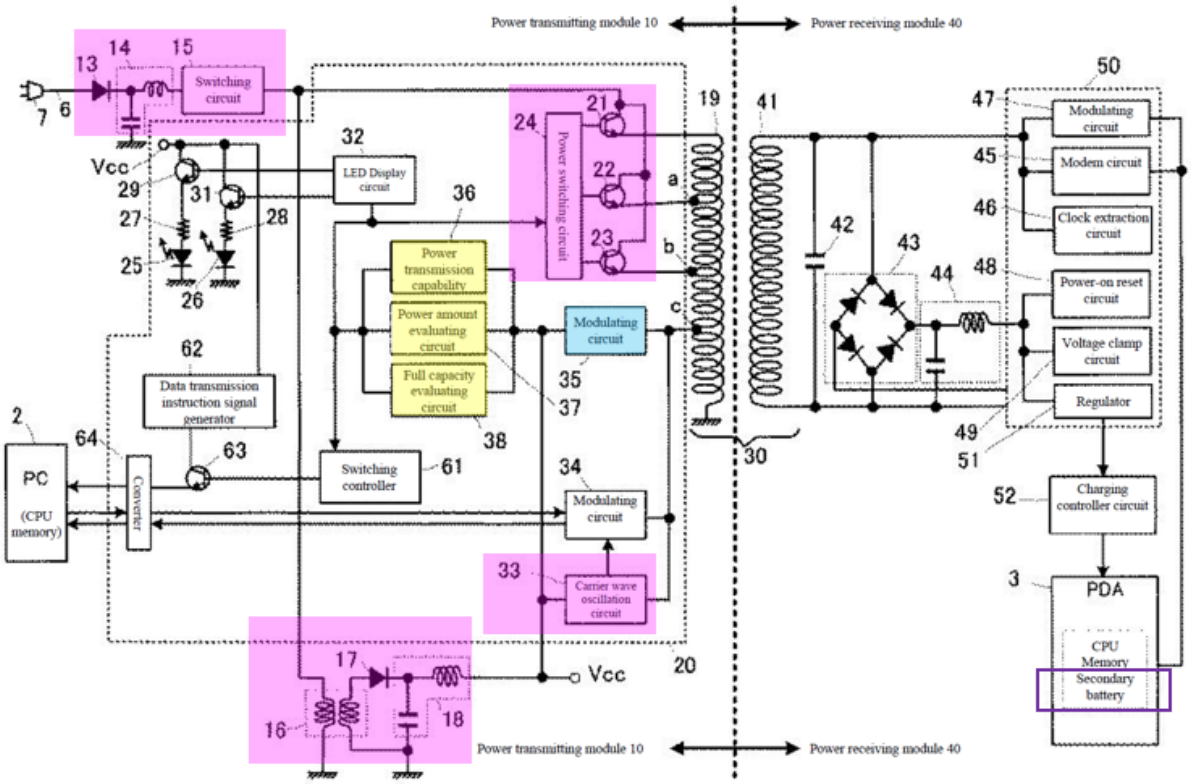

FIG. 7

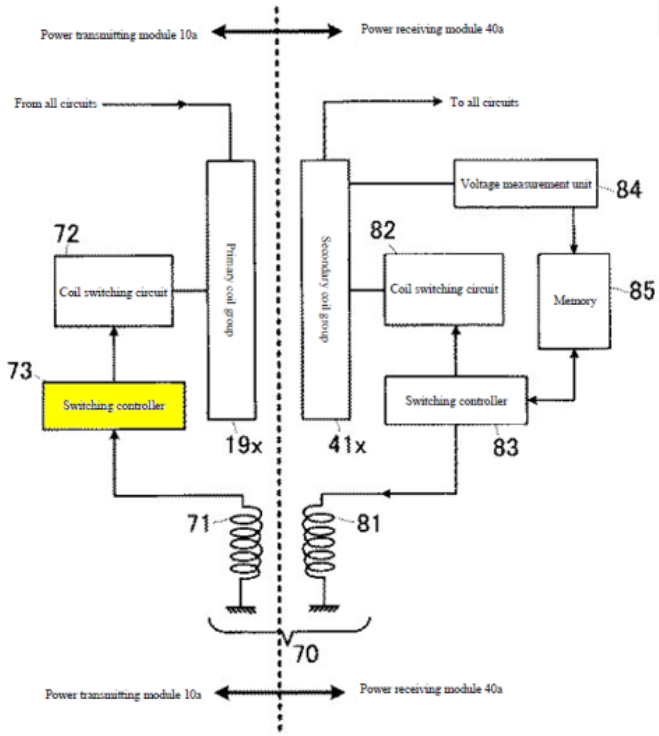

Such inter-relationships would have enabled the "**communication and control circuit**" implemented in the modified *Okada-Odendaal-Kook* system to perform various processes/functions discussed in limitations (g)-(n) discussed below. (Ex.1002, ¶189; §§IX.A.1(g)-(n).) A POSITA would have been motivated to configure the above-identified "**communication and control circuit**" in the *Okada-Odendaal-Kook* system to, *e.g.*, process the current feedback information received from demodulator 35 (including as modified in view of *Kook*) for controlling the operating frequency of the modified "**first drive circuit**" to control the voltage output of secondary rectification terminal during charging/powering operations, as explained. (§IX.A.1(d)(1); Ex.1002, ¶189.)

Circuits 33, 36-38 may be "configured on the same **IC chip**," *e.g.*, "**IC** 20," which includes other components like "controller" 61, 73. (Ex.1005, ¶¶0046, 0081-0084, FIGS. 2, 7.) Such circuitry would have been understood as compact integrated circuitry designed to perform/given certain operations in PTM10, which is consistent with a "**microcontroller**" as understood by a POSITA in context of the '371 patent. (Ex.1002, ¶190; Ex.1001, 24:32-45, 39:33-38 (exemplifying an "IC" or "chip" as a "microcontroller").) "[S]witching controller 73" is likewise part of such "**communication and control circuit**" since it sends "instructions" to control the switching to select specific primary coils. (Ex.1005, ¶¶0095, 0101.)

To the extent it is argued/determined the claimed "microcontroller" requires a processor or similar features not disclosed by *Okada*, it would have been obvious to configure PTM10 in *Okada-Odendaal-Kook* to include such features because it would have been a foreseeable application of known technologies/techniques to use in PTM10, which uses integrated circuit(s) to perform "control[ler]"-type operations. (*Supra*; Ex.1002, ¶191; Ex.1006, 5:65-6:59, FIGS. 4-5 (controller 40); Ex.1024, 6:60-7:14, FIG. 3.) A POSITA would have appreciated implementing well-known processor-based microcontroller technology with PTM10 would have been an obvious variation to how the module can perform similar functionalities, while providing known programmable functionalities. *Kook* discloses "MPU block 30 for controlling internal elements" of charger 1 (§IX.A.1(d)(1); Ex.1059, ¶0041),

and a POSITA would have found it obvious to configure the *Okada-Odendaal-Kook* to include a "**microcontroller**" similar to MPU block 30 for controlling PTM10 components. A POSITA would have had the skills and rationale to implement such a modification, and given the known technology and *Okada*'s teachings, would have done so with a reasonable expectation of success. (Ex.1002, ¶191.)

g) [1(g)]

The *Okada-Odendaal-Kook* combination discloses/suggests this limitation. (Ex.1002, ¶¶192-193.) For reasons explained for limitations 1(e)-1(f), one or more circuits 36/37/38 (part of the "**communication and control circuit**" in the modified *Okada* system) (§IX.A.1(f)) detects, through demodulator 35 ("**first sense circuit**") sensing, a current-modulated response signal from PRM40 (including information corresponding to PDA3 (*e.g.*, device compatibility/capability, power level) via coil 19 ("**a received communication of information in the current modulation in the first primary coil**") used to facilitate power/charge operations, like that described by *Okada*. (§§IX.A.1(e)-IX.A.1(f); *see also* §§IX.A.1(a)-IX.A.1(d); Ex.1005, FIG. 3, ¶¶0056-0057, 0059-0077; Ex.1002, ¶193.)

h) [1(h)]

The *Okada-Odendaal-Kook* combination discloses/suggests this limitation. (Ex.1002, ¶¶194-198.) As discussed, a POSITA would have been motivated to configure *Okada-Odendaal-Kook* to implement closed-loop feedback controlled

frequency switching power delivery based on device information to provide appropriate power to PDA3's battery during power/charging operations. (§IX.A.1(d).) As explained (limitations 1(c)-1(g)), the communication/control circuit (*e.g.*, circuit(s) 36/37/38) in *Okada-Odendaal-Kook* would have operated the "**first drive circuit**" (§§IX.A.1(d)-IX.A.1(g), *e.g.,* with modified switching circuit 15 and *e.g.,* circuits 16-18, 21-24, 33) by *e.g.*, to provide control signal(s) to circuit 24 for selecting a switch 21/22/23 at the **onset** of a charging process, and/or by controlling power transmission based on received/demodulated current feedback information to control the operation frequency of the "**first drive circuit**" (*supra*) **during** the charging process in the modified system to inductively transfer power from coil 19 to coil 41 (the "communication and control circuit…configured to" "**operate the first drive circuit to inductively transfer power from the first primary coil to the receiver coil**"), consistent with *Okada-Odendaal-Kook*. (§§IX.A.1(c)-1(g); Ex.1005, ¶¶0040, 0047, 0051, 0057, 0069-0073; Ex.1002, ¶195.)

Further explained above, operating the "first drive circuit" (including circuit 33) in the modified *Okada* system within a range of frequencies near a resonance frequency, would allow "activation and powering of the receiver unit…" (§IX.A.1(d)(3)) causing the "receiver circuit" (*e.g.*, modulator 47) to provide responsive device information received/processed by demodulator 35 (§IX.A.1(f)) based on current modulation in primary coil 19 (§IX.A.1(e)) ("operate the first drive

circuit…**to activate and power the receiver unit to enable the receiver circuit to communicate the information detected in the current modulation in the first primary coil**"). (Ex.1002, ¶¶195-196.) Consistent with *Okada*, in the above-modified system (*e.g.*, §§IX.A.1(c)-(IX.A.1(d)) circuits 36/37/38 (part of "**communication and control circuit**") controls the operating frequency of the modified switching circuit 15, which provides power to drive oscillating circuit 33 via circuits 16-18 (part of "**drive circuit**" §IX.A.1(d); Ex.1005, ¶0060-0064.) After power/charge operations have begun, circuit 33 (part of "**drive circuit**") in the modified system would generate/transmit, via coil 19, the carrier wave used to "**activate and power**" components in PRM40 ("**receiver unit**") to enable its "**receiver circuit**" (§IX.A.1(b)) to generate/communicate the responsive device information that is transmitted back to PTM10 via coils 41 and 19 based on current modulation techniques/technologies as explained (§IX.A.1(e)). (Ex.1005, FIG. 3, ¶¶0062-0064, 0074-0090; §§IX.A.1(a)-(g); Ex.1002, ¶196.)

Also consistent with *Okada*, the "**communication and control circuit**" in the modified system (*e.g.*, circuits 36/37/38) "perform various decision-making processes based on information included in the signal demodulated by…circuit 35" (via current modulation/demodulation (§IX.A.1(e)). (Ex.1005, ¶¶0040-0042, 0049-0051, 0057-0077, FIGS. 2-3.) Such processes include controlling/configuring inductive powering/charging of the portable device ("**wherein the communication**

of information includes information to enable the communication and control circuit to configure the inductive transfer of power to the portable device"), as explained above. (*Id.*; §§IX.A.1(a)-IX.A.1(f); Ex.1002, ¶¶197-198.)

i) [1(i)]

Okada-Odendaal-Kook in view of *Calhoon* and *Black* discloses/suggests this limitation. (Ex.1002, ¶¶199-213.)

Consistent with *Okada*, in the above-discussed *Okada-Odendaal-Kook* system/apparatus, PTM10 receives device information from PRM40's "receiver circuit," which is provided to circuits 36/37/38 (part of "**communication and control circuit**") to determine PDA3's power requirement ("**a power requirement**"). (§§IX.A.1(a)-(h); Ex.1005, ¶¶0057, 0063-0064, 0069, FIG. 3; Ex.1002, ¶200.)

Like *Okada*, *Kook* describes communicating mobile device-related information to the charger. (§IX.A.1(d)(1).) Current sensing block 60 uses "***a current feedback… to control a voltage of a secondary rectification terminal*** in the charging battery-pack 200," which describes information **corresponding to voltage/current induced by a primary coil at the output of the device's receiver circuitry**. (Ex.1059, ¶¶0041; *see also id.*, 0047, 0054, 0071, 0083; Ex.1002, ¶201.) *Kook* discloses that "a unique ID" ("**a unique identification code**") is "generated in the [battery or mobile device] in response to the pulse signal of…charger 1" and

"transmitted to…charger 1," which, based on the unique ID, supplies power to the battery/mobile device. (Ex.1059, ¶¶00012, 0046.)

Thus, in addition to other teachings/suggestions in *Kook-Okada* and reasons discussed above (§IX.A.1(d)(1); §§IX.A.1(a)-(h)), a POSITA would have been motivated, and found obvious, to configure the *Okada-Odendaal-Kook* system such that the information communicated (§IX.A.1(h)) to include information corresponding to a voltage/current induced by primary coil 19 at the output of the receiver circuit in PDA3 (§IX.A.1(b)); information corresponding to PDA3 (*e.g.*, *Okada*'s device capability/compatibility, charge status) and information corresponding to a voltage/current induced by coil 19 at the output of the receiver circuit (§IX.A.1(b)), *e.g.*, output of rectifying circuit 43 (which provides DC signal to charge/power PDA3's battery) and a unique ID (*e.g.*, that disclosed/suggested by *Kook*) to facilitate the power transmission/adjustment features/operations in the modified *Okada* system as discussed above. (§§IX.A.1(d)-IX.A.1(h); Ex.1002, ¶202.) A POSITA would have had similar rationale/skills, and expectation of success discussed above for the modifications involving *Kook*'s teachings. (*Id.*) A POSITA would have appreciated the benefit of obtaining additional information with the device capability/compatibility/charge information (Ex.1005, FIG. 3, ¶¶0060-0090), such as a unique PDA3 ID that is used to recognize/confirm/verify the mobile device to receive power from the charger system (Ex.1059, ¶¶0046-

0047). Such modification(s) would have been within a POSITA's skill and expectation of success, given it would have involved known technologies/techniques (*e.g.*, leveraging *Okada-Kook*'s modified feedback mechanisms/operation for receiving information, including an identifier, for verifying the mobile device and controlling rectifier voltage output for battery charging, like that taught/suggested by *Okada-Odendaal-Kook*. (Ex.1002, ¶202.)

A POSITA would have also been motivated, and found obvious, to consider/implement use of other information to further such power transfer control operations, especially in light of *Calhoon*. (Ex.1002, ¶203.) *Calhoon* is in the same technical field as *Okada-Odendaal-Kook* and the '371 patent, and discloses features reasonable pertinent to problem(s) the inventor for the '371 patent and POSITA was trying to solve. (§IX.A.1(a); Ex.1041, FIGS. 3, 5A, 6, ¶¶0003-0010, 0022, 0029, 0034, 0045-0050, 0065; Ex.1005, ¶0110, 0147-0151; Ex.1001, 1:60-2:17; *infra*; Ex.1002, ¶203.) Thus, *Calhoon* would have been consulted by the inventor and POSITA looking to design/implement a power/charging apparatus/system like that described by the *Okada* (as modified above). (Ex.1002, ¶203.)

Calhoon discloses an inductive charging system for a mobile device's battery charger/battery pack. (Ex.1041, Abstract, FIGS. 2-3 (below), ¶¶0002, 0008-0010, 0022-0029, 0045, 0065; Ex.1002, ¶204.)

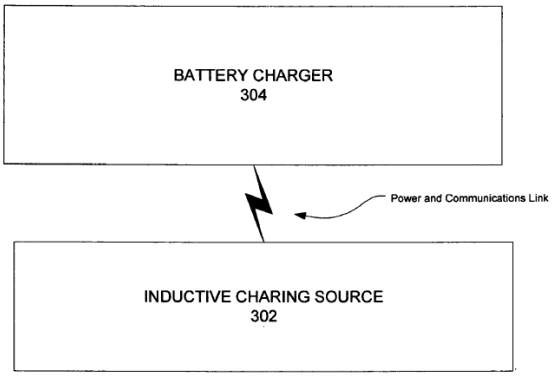

FIGURE 2

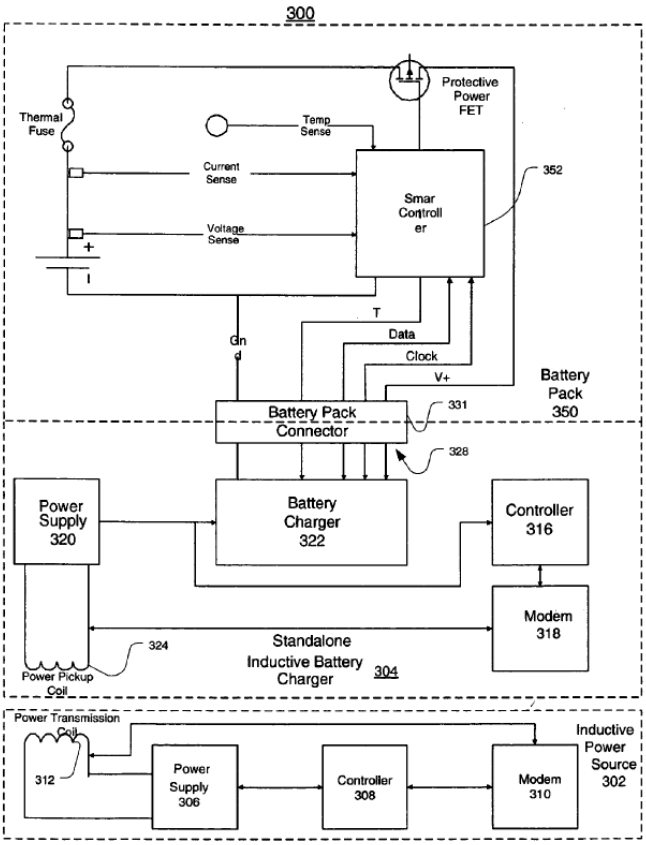

FIGURE 3

Calhoon describes obtaining an **ID/serial number of a power receiver**, *e.g.*, charger assembly 304 or battery pack 350 and wirelessly communicating that information to inductive charging source 302. (*Id.*, Abstract, ¶¶0022, 0034, 0046-

0048, 0050-0052, 0056, FIGS. 3, 5A, 6.) Controller 316 in charger 304 may include data, "such as **a battery charger ID number**, **serial number**, **manufacturer's name**," which can be used "for novel power operations…, such as shown in FIGS. 5A, 5B, and 6." (*Id.*, ¶0038; *id.*, FIGS. 5A-6, ¶¶0034, 0042-0044, 0045-0048, 0049, 0050-0052, 0056.) Charging source 302 "can request other information relevant to" charger 304 (*e.g.*, battery charger ID or charger/battery pack serial number), which charger assembly 304 transmits. (*Id.*, ¶0047.) "***This information can be used for security, data integrity, or other purposes***." (*Id.*) (Ex.1002, ¶¶204-205.) Thus, *Calhoon* discloses providing power receiver information including a **"manufacturer code"** (*e.g.*, battery charger ID/serial number/manufacturer's name). (Ex.1041, ¶0047; *id.*, FIGS. 3-5A, ¶¶0036-0037, 0040-0043.)

Thus, a POSITA would have been motivated, and found obvious, to modify the *Okada*-based system to include in the information communicated (§IX.A.1(h)) device serial number and/or manufacturer's name information ("**manufacturer code**"). (Ex.1002, ¶206.) Such a modification would have enhanced the verification features discussed above (*supra*) by allowing the modified system/cradle 4 to verify and/or authenticate each mobile device based on multiple types of information (*e.g.*, device/battery manufacturer's name (*Calhoon*) and/or with unique ID (*Kook-Calhoon*). (Ex.1002, ¶206.) For similar reasons (including similar rationale/expectation of success, etc.) discussed above (regarding use of unique ID

information), a POSITA would have been further motivated in light of *Calhoon*, to configure the modified *Okada* system/apparatus to maintain, transmit, and use device information like that taught by *Okada*, and by *Kook-Calhoon*, to ensure properly verified and positions/aligned mobile device receive appropriate power in accordance with the charging/power operations discussed above. (§§IX.A.1(a)-IX.A.1(h); Ex.1002, ¶206.) *KSR* at 416-18.

Moreover, while *Okada-Odendaal-Kook-Calhoon* do not expressly disclose communicating "**a charge algorithm profile**," a POSITA would been motivated, and found obvious, in view of *Black* to configure the modified apparatus to communicate charging/powering algorithm profile information with the above-discussed device information to enhance/compliment how cradle 4 ("system") determines and inductively charge PDA3's battery. (Ex.1002, ¶207.)

Okada discloses using received device information to determine a power level (low/intermediate/high) based on portable device's power requirements. (Ex.1005, FIGS. 3, 5, ¶¶0069, 0073-0076, 0090; Ex.1002, ¶208.) It was known to use charging algorithm profile(s) to control mobile device battery charging (*e.g.*, to avoid overcharging). (Ex.1002, ¶208; Ex.1001, 38:13-16 ("[m]ost mobile devices…include a Charge Management IC…to control charging of their internal battery").) Thus, *Black* describes communicating charging profile information for

controlling charging operations in an inductive power transfer system having similar features like those of *Okada-Kook-Calhoon*.

Black discloses inductive charging a portable device battery, including a transceiver for communications with a charger. (Ex.1007, Abstract, FIGS. 1-2 (below), ¶¶0002, 0013-0017.) Battery 100/200 includes a charging coupler 108/208 coupled to cell 104/204 through charging circuit 110/210, and communications coupler 112/212. (*Id.*, ¶¶0015, 0017, 0018 ("***coil 212 may be a portion of the second coil 208***").)

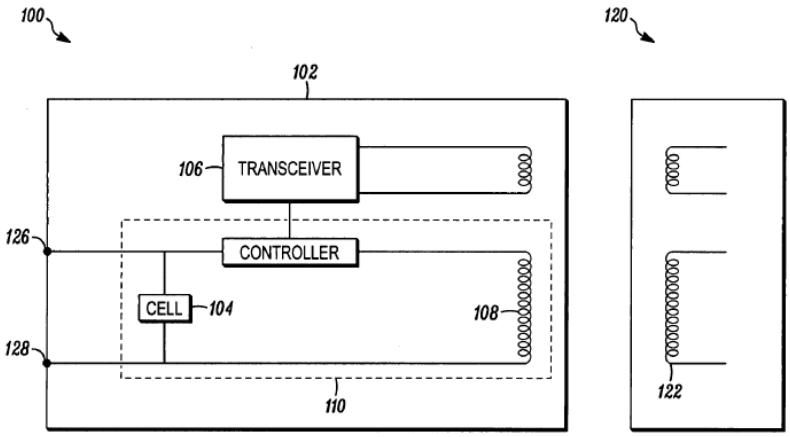

FIG. 1

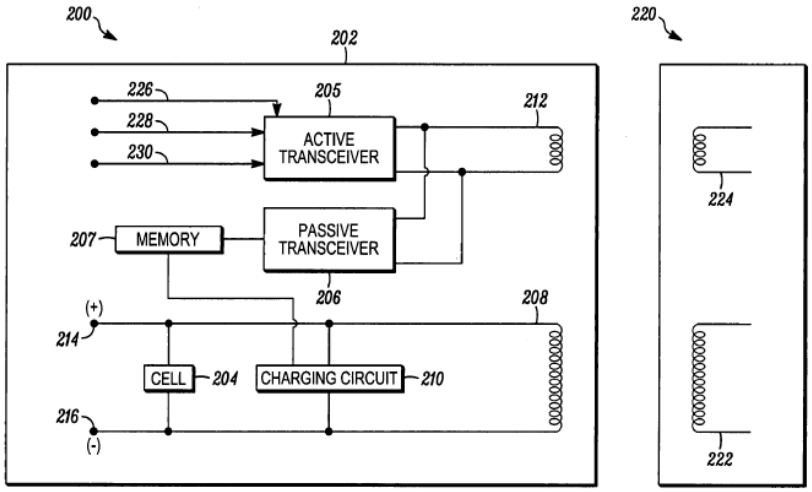

FIG. 2

When battery is in range of the charger, communications between them "may take place and inductive charging can occur." (*Id.*, ¶0019; Ex.1002, ¶209.)

Black is in the same technical field as *Okada-Kook-Calhoon*, and the '371 patent, and discloses features that were reasonable pertinent to one or more problems the inventor/the '371 patent (and POSITA) was trying to solve. (*Supra*; §§IX.A.1(a), IX.A.1(d); Ex.1007, Abstract, FIGS. 1-4, ¶¶0002, 0005, 0012-0028 (and *infra*); Ex.1001, 11:31-39; Ex.1002, ¶210.) Therefore, a POSITA would have considered the teachings of *Black* when looking to design/implement the above *Okada-Odendaal-Kook-Calhoon* system. (Ex.1002, ¶210.)

Black discloses "device identification and charging" procedures, where battery information is requested/received upon detecting battery. (Ex.1007, FIG. 3, ¶0020.)

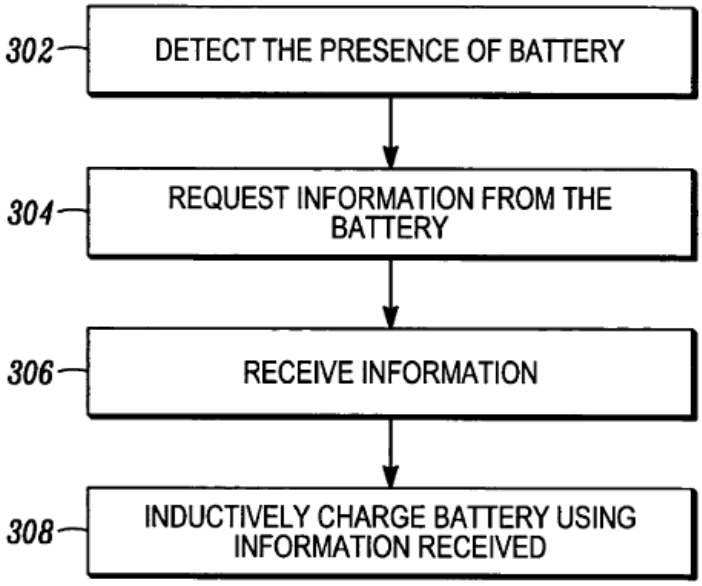

The information may include, *e.g.*, device ID and additional information, *e.g.*, "***battery characteristics*** *or* ***charging profile***." (*Id.*, ¶0021.) Charger 120 inductively charges the battery based on the received information. (*Id.*, ¶0022; Ex.1002, ¶211.)

In light of *Black,* a POSITA would have been motivated and found obvious to modify *Okada-Odendaal-Kook-Calhoon* to include a charging algorithm profile associated with PDA3 and/or its battery ("**a charge algorithm profile**") with the above-discussed device information communicated by PRM40's "**receiver circuit**" (*supra*; §§IX.A.1(c), IX.A.1(h)) to enable circuits 36/37/38 (part of "**communication and control circuit**") to determine/configure the inductive transfer of power to PDA3 in accordance with the closed-loop feedback features implemented by the modified *Okada-Odendaal-Kook-Calhoon* system (§§IX.A.1(d)-IX.A.1(h).) A POSITA would have appreciated receiving charging

algorithm profile information would have allowed the modified charger "system" to accurately/properly adjust suitable power for specific battery/device determined to be capable of, and properly positioned/aligned, to receive such power, as discussed. (*Id.*; Ex.1002, ¶212.)

A POSITA would have had reasons to consider and implement such features given it was known different batteries/portable devices have different power/charge characteristics/algorithm-profiles. (Ex.1002, ¶213; Ex.1007, ¶0003; Ex.1037, 1:56-2:6, 2:18-19, 6:51-7:2, 7:36-53, FIGS. 4A-4C; Ex.1039, Abstract, 3:23-35, FIG. 1, 5:20-34.) Thus, a POSITA had the requisite motivation/skills, to implement, and reasonable expectation of success in achieving, the above-discussed modification. (Ex.1002, ¶213.) Especially since it would have involved applying known technologies/techniques (*e.g.,* charging algorithms profiles to control charging) to yield the predictable result of providing an inductive power/charging system that uses specific device information to control power transfer, consistent with the features disclosed by *Okada-Odendaal-Kook-Calhoon-Black*. (*Id*., ¶213.) *KSR*, 550 at 416-18.

j) [1(j)]

The *Okada-Odendaal-Kook-Calhoon-Black* combination discloses/suggests this limitation. (Ex.1002, ¶¶214-215; *see also* §§IX.A.1(a)-(i).) For reasons discussed for limitation 1(i) and other limitations, a POSITA would have been

motivated, and found obvious, to modify the *Okada-Odendaal-Kook-Calhoon-Black* combination to "**operate**" the modified charger "system" (including the "**first drive circuit**" (§IX.A.1(d)) according to the received "**power requirement and charge algorithm profile**" to inductively power/charge, via coils 19 and 41, PRM40 ("**receiver unit**") and PDA3's battery ("**battery of the portable device**"). (§IX.A.1(i); *see also* §§IX.A.1(a)-(h); Ex.1002, ¶215.)

k) [1(k)]

The *Okada-Odendaal-Kook-Calhoon-Black* combination discloses/suggests this limitation. (Ex.1002, ¶¶216-220.) As discussed, a POSITA would have modified the *Okada-Odendaal-Kook-Calhoon-Black* system/apparatus such that the communicated information includes information **corresponding to a voltage/current** induced by the first primary coil **at the output of the receiver circuit** (§IX.A.1(i)), where such information would have been detected in the **current modulation** in primary coil 19 from the **current modulated** in **receiver coil** 41 (*Id.*; §§IX.A.1(e), IX.A.1(h); Ex.1002, ¶217.)

As explained, *Okada* discloses continuously-providing device information after the onset of power transfer operations (receiving additional information "**while charging the battery of the portable device**"). (Ex.1005, ¶¶0074-0090, FIG. 3; §§IX.A.1(g)-1(j).) Further, *Kook* explains that upon recognizing the "unique ID" of the battery/device, "a voltage of the secondary rectification terminal in [the

battery/device] is controlled to a **constant voltage**" via coils 70/80 by "using an automatic variation algorithm of primary frequency of…charger 1." (Ex.1059, ¶0047; *id.*, ¶0041 (block 60 "**stably controlling**" power "through a current feedback"); Ex.1002, ¶¶218-219.)

Consistent with the above-discussed modified *Okada* system in light of, *inter alia Kook* (§IX.A.1(d)), a POSITA would have been motivated, and found obvious to configure the "**communication/control circuit**" (§IX.A.1(f)) in *Okada-Odendaal-Kook-Calhoon-Black* (§§IX.A.1(d)-IX.A.1(j)) to continuously "**receive additional information**" (*e.g.*, information corresponding to a voltage/current induced by coil 19 at "receiver circuit" output) "**while charging the battery of the portable device**" in order to "stably control[]" an output voltage to "a constant voltage," thus allowing the charger system to adjust its operation, and thus the transmitted power (similar to *Kook*/*Okada* and explained above (§IX.A.1(d)). (Ex.1002, ¶220.) Given the above modified system would have been configured to communicate such information using current modulation/demodulation techniques/components for reasons explained (§§IX.A.1(e)-(j)), such "additional information" would have been received "**in the current modulation in the first primary coil** [19] **from the modulation of the current in the receiver coil** [41]" like that claimed. (Ex.1002, ¶220.)

l) [1(l)]

The *Okada-Odendaal-Kook-Calhoon-Black* combination discloses/suggests this limitation for reasons explained. (Ex.1002, ¶¶221-222; §§IX.A.1(a)-(k).) As discussed for limitations 1(d)-(k), the *Okada-Odendaal-Kook-Calhoon-Black* system/apparatus would have been configured to perform a closed-loop feedback process (§IX.A.1(d)) to stably control, using current feedback, the portable device's rectification terminal voltage (provided as output of receiver circuit (§IX.A.1(b) used to charge PDA3's battery) ("**regulate in a closed loop feedback manner the voltage or current at the output of the receiver circuit**"). (§§IX.A.1(d)-IX.A.1(k); Ex.1002, ¶222.)

For similar reasons explained above, such features would have been provided in accordance with the current feedback information continuously received during operation ("**the received additional information corresponding to the voltage or current at the output of the receiver circuit**") (§§IX.A.1(k)) by varying the operating frequency of the primary-side circuit (via, *inter alia*, modified switching circuit 15 (part of "**first drive circuit**")) (§IX.A.1(d)) while transferring power to charge PDA3's battery (§§IX.A.1(e)-IX.A.1(l)) ("**while charging the battery of the portable device**"). (*See also* §§IX.A.1(a)-(c); Ex.1002, ¶222.)

m) [1(m)]

The *Okada-Odendaal-Kook-Calhoon-Black* combination discloses/suggests this limitation. (Ex.1002, ¶¶223-225; §§IX.A.1(a)-(l).)

As explained, *Okada* discloses "[e]ven after power transmission has begun," device information is periodically/continuously transmitted from PRM40 to PTM10 in response to the periodic/continuous transmission of the carrier wave by circuit 33. (§§IX.A.1(f)-(l); Ex.1005, ¶0074-0077, FIG. 3 (below); Ex.1002, ¶224.)

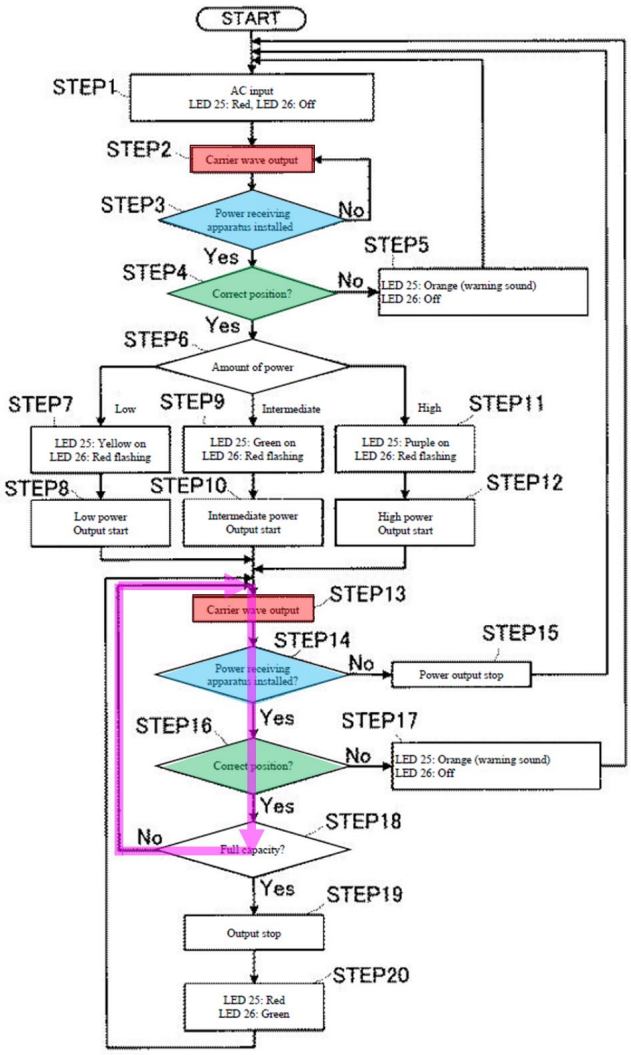

Based on the information received/detected through demodulator 35 ("**the first sense circuit**") and provided from PRM40's circuit 47 (part of "**receiver circuit**"), circuit 36 determines whether PDA3 is properly positioned on cradle 4 (Ex.1005, ¶¶0074-0075) and circuit 38 determines whether PDA3 is fully charged (*id.*, ¶0076), where circuits 36/38 are part of the "**communication and control circuit**" (§IX.A.1(f)). (Ex.1005, ¶¶0074-0090.) For reasons explained, the *Okada-Odendaal-Kook-Calhoon-Black* system/apparatus, would have been configured to perform similar features in similar fashion, like that recited in limitation 1(m). (§§IX.A.1(a)-IX.A.1(l); Ex.1002, ¶225.)

n) [1(n)]

The *Okada-Odendaal-Kook-Calhoon-Black* combination discloses/suggests this limitation. (Ex.1002, ¶¶226-227.)

Okada discloses that if circuit 36 determines a device "has been removed" from cradle 4 and/or not properly positioned, then "circuit 24 controls all of the transistors [21/22/23]…into an OFF state and stops power transmission." (Ex.1005, ¶¶0074-0075, FIG. 3). Likewise, circuit 38 determines whether "a charged state" of PDA3 is at "full capacity," and if so, "circuit 24…ends power output." (*Id.*, ¶0076, FIG. 3.) (Ex.1002, ¶227.) Consistent with that disclosed in *Okada* and for reasons explained, the "**communication and control circuit**" (§IX.A.1(f) (circuits 36/38), §IX.A.1(k)) in the *Okada-Odendaal-Kook-Calhoon-Black* system would have

likewise been configured to "**stop operation of the first drive circuit**" (§IX.A.1(d) for **inductive power transfer to PDA3**, upon determination PDA3 was removed or its battery is fully charged ("**device is no longer present or charging is complete**"). (§§IX.A.1(d)-(m); Ex.1002, ¶227.)

2. Claim 4

a) [4]

Okada-Odendaal-Kook-Calhoon-Black discloses/suggests this limitation. (Ex.1002, ¶¶228-236; §IX.A.1.)

Okada discloses cradle 4 have an "DC voltage input" (§IX.A.1(d)(1) (associated with circuits 13/14) connecting cradle 4 to a PC2 via "wire (line 8)." (Ex.1005, FIG. 1, ¶¶0034-0036; Ex.1002, ¶229.)

FIG. 1

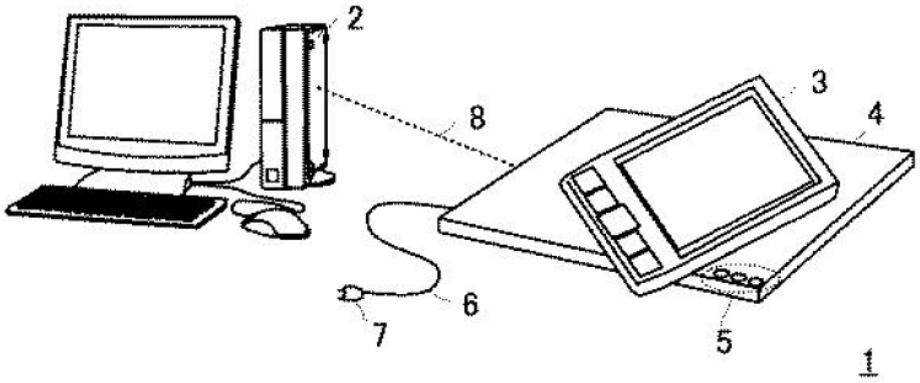

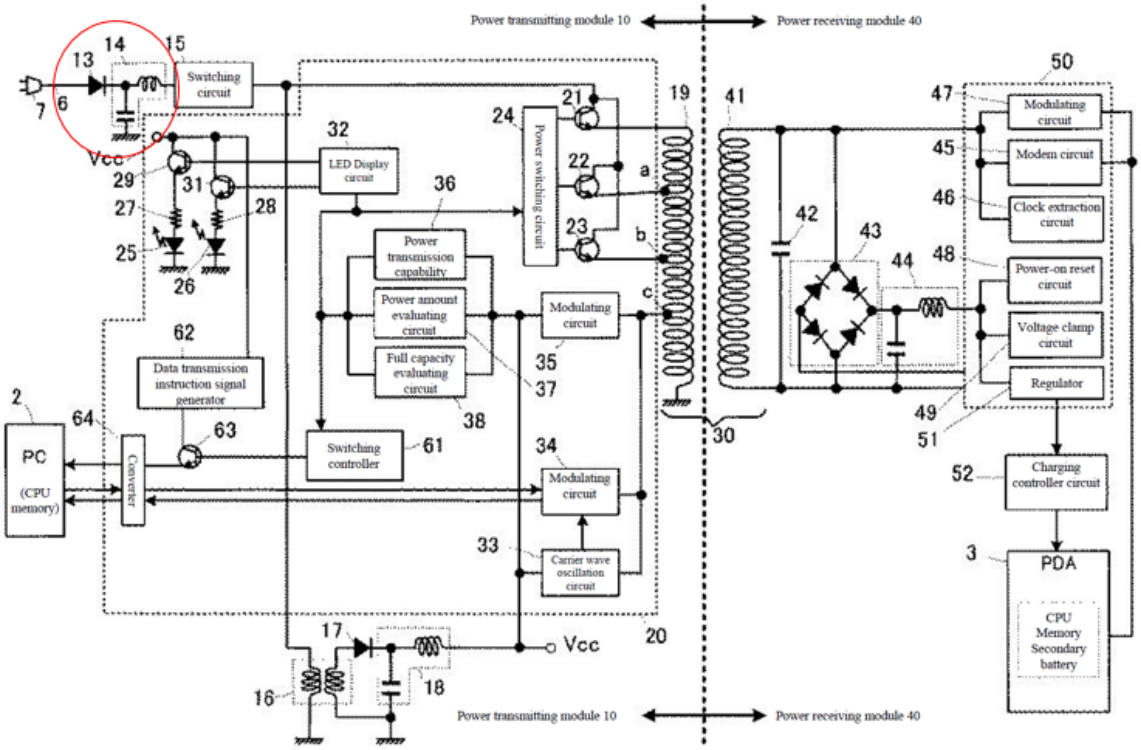
Power transmitting module 10
Power receiving module 40
Switching circuit
LED Display circuit
Power switching circuit
Power transmission capability
Power amount evaluating circuit
Full capacity evaluating circuit
Modulating circuit
Data transmission instruction signal generator
Switching controller
Carrier wave oscillation circuit
PC
(CPU memory)
Converter
Vcc
Modulating circuit
Modem circuit
Clock extraction circuit
Power-on reset circuit
Voltage clamp circuit
Regulator
Charging controller circuit
PDA
CPU
Memory
Secondary battery

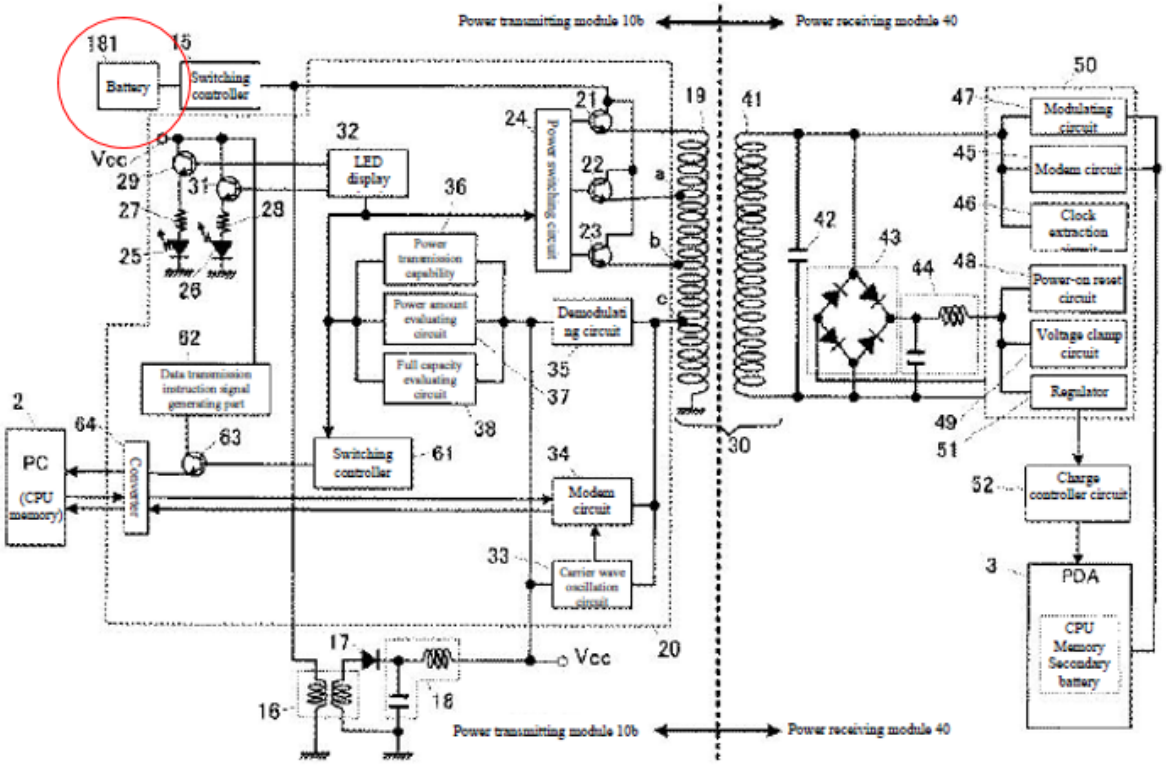
Power transmitting module 10b
Power receiving module 40
Battery
Switching controller
LED display
Power switching circuit
Power transmission capability
Power amount evaluating circuit
Full capacity evaluating circuit
Demodulating circuit
Data transmission instruction signal generating part
Switching controller
Modem circuit
Carrier wave oscillation circuit
PC
(CPU memory)
Converter
Vcc
Modulating circuit
Modem circuit
Clock extraction
Power-on reset circuit
Voltage clamp circuit
Regulator
Charge controller circuit
PDA
CPU
Memory
Secondary battery

Cradle 4 (and PTM10) communicates with PC2, where each includes a "connection interface" enabling connection/communication to occur via "the same cable." (*Id.*, ¶¶0042-0044, 0078-0079, 0088-0089, FIG. 14(a)-(b), ¶0136-0137.) *Okada* does not expressly disclose using known USB power/data communications. In light of *Kook*, it would have been obvious to implement such features in the *Okada-Odendaal-Kook-Calhoon-Black* charger system so that cradle 4 receives power/communicates data over a common interface/bus known to provide such dual functionalities (*e.g.*, USB). (Ex.1002, ¶230.)

Kook discloses that charger 1 includes USB connector 10 (**yellow** below) connected to a USB port/bus of computer 100 (a DC power supply) to receive a DC voltage, *e.g.*, 5V (*e.g.*, receives a DC voltage via a USB), used to power/charge device 300/battery 200. (Ex.1059, FIGS. 1, 4 (below), ¶¶0008, 0017, 0023, 0033, 0042, 0044, 0055, 0061; Ex.1002, ¶231.)

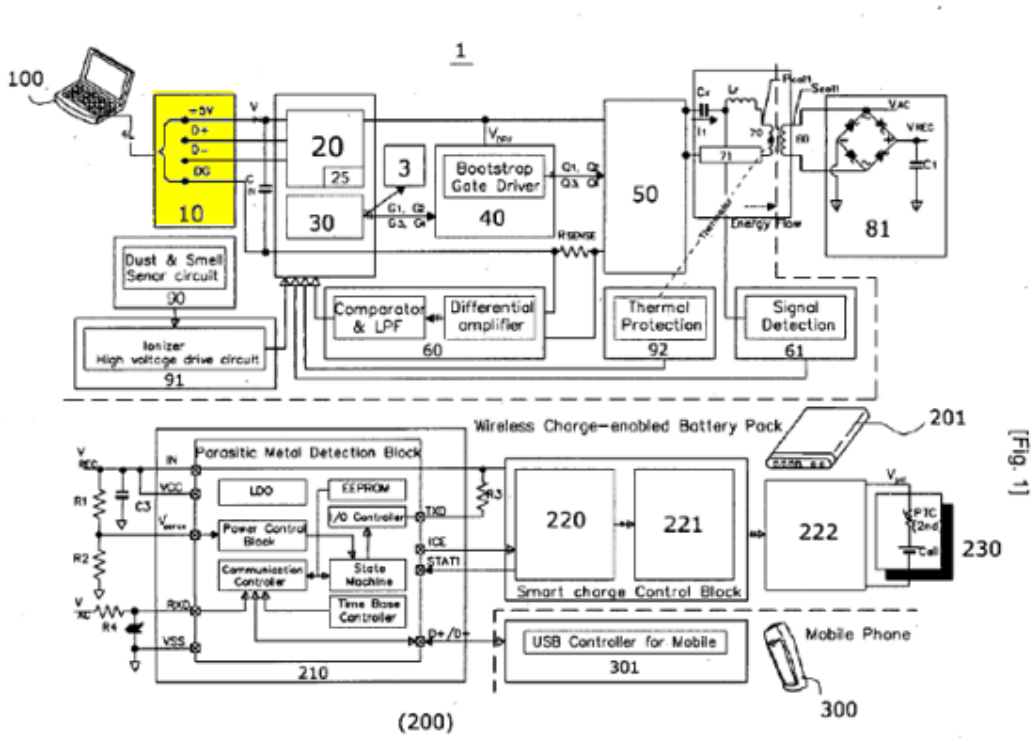

Standard 24PIN Socket	USB Connector	Cigar Socket
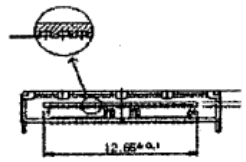	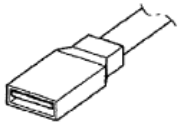	

Charger 1 communicates via the USB port/bus with computer 100, *e.g.*, to receive music/data and provide it to the mobile device. (*Id.*, ¶0042; *id.*, ¶¶0008, 0032, 0038-0039, 0041; Ex.1002, ¶232.)

Thus, a POSITA would have been motivated and found obvious to configure "system" to employ known USB technologies/techniques to transfer power to the "**DC voltage input**" of the "**first drive circuit**" (§IX.A.1(d)) and communicate data

to the "**communications and control circuit**" (*e.g.,* circuits 36/37/38, with *e.g.,* one or more of circuits 61-64, §IX.A.1(f)) because it would have enhanced the charger's versatility by using a single interface/port/cable to receive both DC power and data communications with PC 2 ("**DC power supply**"), consistent with *Kook* and *Okada*. (Ex.1002, ¶233.)

A POSITA would have been motivated to design/implement such a modification since it would have enabled cradle 4 to receive DC power (DC voltage input) from alternative sources, *e.g.*, computer's USB port (PC 2 ("**DC power supply**")), allowing additional flexibility and conveniences when using cradle 4 to power/charge a device, consistent with *Okada* that contemplates alternative power sources for cradle 4. (Ex.1002, ¶234; Ex.1005, ¶¶0148-0149.) It would have also allowed cradle 4 (including circuits 36/37/38) to perform data communications with PC 2 (*e.g.*, facilitating communications between PDA3 and PC 2 via cradle 4 (Ex.1005, ¶¶0034-0036, 0078-0079, FIG. 6)) also **through the same USB connection/port**, enhancing versatility/applications of PTM10 and providing alternative power/data input connections/wires (*e.g.,* reduce cables for communicating/powering via USB connection), consistent with *Okada* and *Kook*.

A POSITA would have been motivated to connect cradle 4/PTM10 to PC 2 ("**DC power supply**") via the USB connection such that "**communication and control circuit**" (§IX.A.1(f)) communicates with PC 2 ("**DC power supply**") via

the USB for similar reasons. (Ex.1002, ¶235.) The **communications/control circuit** in *Okada* (including as modified) can include circuits 36-38 and circuit(s) 61/62/63/64, which receives signal(s) from PC 2 and transmits an instruction signal in a "format that the PC 2 can read" to enable PC 2 to "recognize[] that a device…is mounted" on cradle 4 and "that data transmission and reception preparation is completed" and "data to be transmitted" to PDA3 is "transmitted to converter 64." (Ex.1005, ¶¶0083-0085, *id.*, ¶¶0078-90; Ex.1002, ¶235.) Configuring the modified *Okada* system (§IX.A.1) to leverage the same USB connection for power/data would have been an obvious implementation of conventional technologies (*Kook*) with foreseeable benefits (e.g., reduced cables, compatibility enhancements, etc.) (Ex.1002, ¶235.)

A POSITA would have had the skill and rationale in implementing, and reasonable expectation of success in achieving, such modification. (Ex.1002, ¶236.) Especially in light of the teachings of *Okada-Kook* and state-of-art knowledge of conventional USB communications that would have been employed to predictably yield an inductive power/charging system that receives/communicates DC power/data from/with PC 2 in the modified *Okada-Odendaal-Kook-Calhoon-Black* system. (*Id.*, ¶236; §IX.A.1.) *KSR* at 416-18.

B. Ground 2: Claim 2 is obvious over *Okada* in view of *Odendaal*, *Kook, Calhoon, Black*, and *Kazutoshi*

1. Claim 2

a) [2]

Okada-Odendaal-Kook-Calhoon-Black in view of *Kazutoshi* discloses/suggests this limitation. (Ex.1002, ¶¶238-245; §IX.A.1.) As discussed, the disclosed **communication/control circuit** (§IX.A.1(f)) would have been configured to regulate in a "**closed loop feedback manner**" the voltage/current at the receiver circuit output (§IX.A.1(l).) To the extent that the *Okada-Odendaal-Kook-Calhoon-Black* combination does not expressly disclose that such a feedback process/techniques comprises "**a…(PID) control technique**," a POSITA would have found it obvious to implement such features in view of *Kazutoshi*. (Ex.1002, ¶239.)

Kazutoshi discloses "[a] contactless power supply system" with a power supply device 21 providing power to portable object (cart 3). (Ex.1034, Abstract, FIG. 1, ¶¶0001, 0005-0014, 0024-0030.) Power supply device 21 may provide power through inductive wires 19, where power is induced on coil 20A used to operate a load (motor 15). (Ex.1034, FIG. 3 (below), ¶0029; Ex.1002, ¶240.)

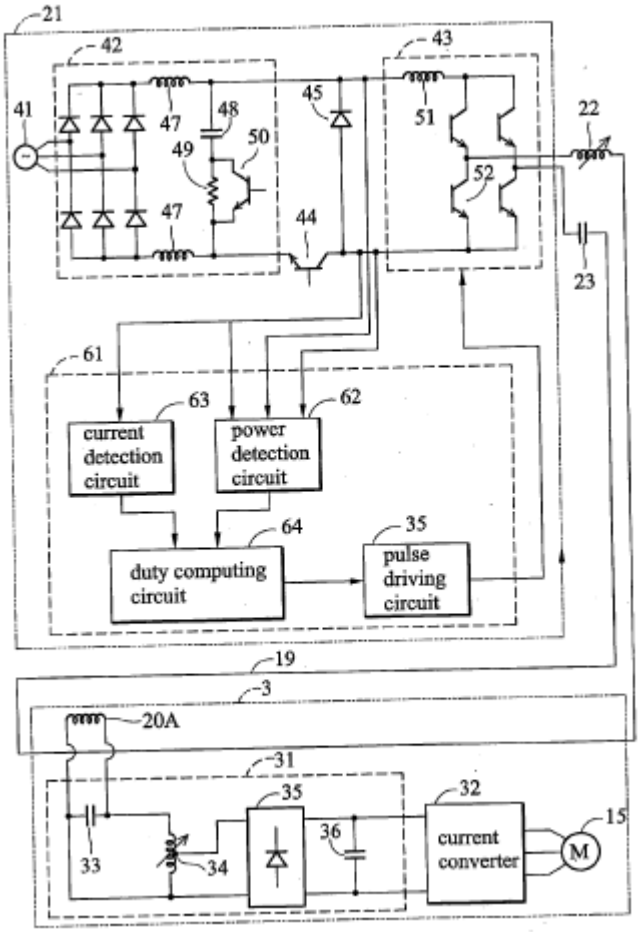

FIG. 3

Device 21 includes controller 61 having power detection circuit 62, current detection circuit 63, duty computing circuit 64, and pulse driving circuit 65. (*Id.*, ¶0038.) Circuit 64 receives signals (associated with output of current converter/alternator 42/43, and inductive wires 19's output power) from circuits 62 and 63. (*Id.*) Circuit 64 "employs the output current of…circuit 63 as a reference, evaluates the duty of the square wave driving the transistor 52 in the current alternator 43," and provide an output signal to circuit 65 to drive transistor 52 and inductive wire 19 to power cart 3. (*Id.* ¶¶0038, 0043.) (Ex.1002, ¶241.)

Kazutoshi is in the same technical field as *Okada* (including as modified) and the '371 patent, and also discloses features that were reasonable pertinent to problems the inventor/'371 patent was trying to solve. (§§IX.A.1(a)-IX.A.1(c); Ex.1001, Abstract, 3:55-5:17, 33:39-35:3; Ex.1034, Abstract, ¶¶0029, 0036-0039; Ex.1002, ¶242.) A POSITA would have considered *Kazutoshi* in context of modified *Okada* apparatus, looking to design/implement an inductive charging system like the modified *Okada* apparatus. (Ex.1002, ¶242; §IX.A.1.)

Kazutoshi discloses circuit 64 comprises other components (*e.g.,* 71-76), where "[t]he multiplier 72, the integrator 73, and the differentiator 74 make up a ***proportional integral derivative (PID)*** controller." (Ex.1034, ¶0039.) The controller uses the difference between the output current (circuit 63) and a reference value to determine an output signal to circuit 65 for driving transistor 52 and inductive wires 19 to inductively power cart 3. (*Id.*, ¶¶0040-0043.) The PID controller provides "an output voltage for load resistance R and an output current within the range of the reference current." (*Id.*, ¶¶0043-0044; Ex.1002, ¶243.)

A POSITA would have been motivated and found obvious to configure the **communication/control circuit** in the modified *Okada* apparatus/system (§§IX.A.1(d), IX.A.1(l)) to use a PID control technique to regulate one or more outputs of the one or more receiver rectifier circuits in the apparatus (like features described by *Kazutoshi*) for regulating the receiver circuit output. (§IX.A.1(l);

Ex.1002, ¶244.) A POSITA would have recognized/appreciated the known PID control techniques/technologies in a powering/charging system's controller for regulating a rectified/output DC voltage, as demonstrated by *Kazutoshi* and state-of-the-art. (Ex.1002, ¶244; Ex.1044, ¶¶0031, 0078; Ex.1046, ¶0073.)

A POSITA would have had the skill/rationale in implementing, and reasonable expectation of success in achieving, such modification. (Ex.1002, ¶245.) Especially where it would have involved applying known technologies (PID control technologies) (*Kazutoshi* and state-of-art knowledge) with wireless power transfer/charging systems (*Okada-Odendaal-Kook-Calhoon-Black*) according to known techniques (e.g., regulating output signal of powering/charging system) to yield the predictable result of providing an inductive power/charging system with a regulated current/voltage output signal at the receiver circuit, consistent with the features of the modified *Okada* apparatus discussed above . (*Id.*, ¶245; §IX.A.1.) *KSR* at 416-18.

C. Ground 3: Claim 3 is obvious over *Okada* in view of *Odendaal*, *Kook*, *Calhoon*, *Black*, and *Masias*

1. Claim 3

a) [3]

Okada-Odendaal-Kook-Calhoon-Black in view of *Masias* discloses/suggests this limitation. (Ex.1002, ¶¶246-257; §IX.A.1.)

The disclosed "**DC voltage input**" receives a "**DC voltage**" from circuits 13/14. (§IX.A.1(d)(1); Ex.1005, ¶0038 ("DC voltage").) *Okada* discloses adjusting power transmission level using mobile device's "power consumption information." (§IX.A.1; Ex.1005, ¶¶0057, 0063-0064, 0069-0073.) To the extent that *Okada* does not expressly disclose claim 3, a POSITA would have found it obvious to configure the modified *Okada* apparatus (§IX.A.1) in view of *Masias* to implement features recited therein. (Ex.1002, ¶¶247-248.)

Masias discloses a power source/distribution apparatus 10. (Ex.1031, Abstract.) The apparatus 10 (Figure 1) includes energy management system (EMS) 50 having first/second battery inlets (12/13), AC and DC external power source inlets (14/15), outlets 70/71. (*Id.*, 4:5-9.) EMS 50 manages "allocation of power from…power sources," and "the supply of power…at multiple and customizable voltage levels." (*Id.*, 4:9-13.) *Masias* explains that the inlet/outlet couplings can involve "inductive" connections. (*Id.*, 2:8-12, 3:26-29, 4:9-24, 7:9-41.)

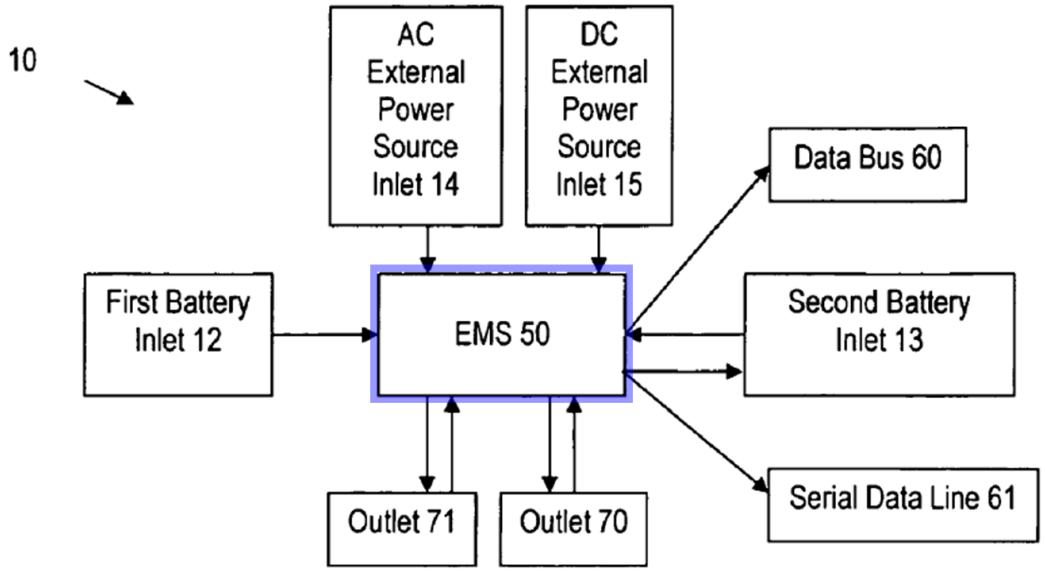

(Ex.1031, FIG. 1 (annotated).) *Masias* is similar to (and in same technical field as) *Okada-Kook* and the '371 patent, as it a power transfer system (with indicative couplings) providing levels of power, and discloses features reasonable pertinent to problem(s) the inventor/'371 patent/POSITA was trying to solve. (Ex.1031, 6:5-37; §§IX.A.1(a)-(d); Ex.1005, ¶¶0057, 0034-0038, 0057, 0094-0109, 148-151; Ex.1001, Abstract, 1:60-5:17; Ex.1002, ¶249.) A POSITA would have thus considered *Masias* in context of the above modified *Okada* combination. (Ex.1002, ¶¶249-250.)

Masias explains EMS 50 couples to an AC source (rectified using rectifier circuit 45) and a DC source and may include "***a voltage regulator device[/process]***" to "***provide multiple, constant, preprogrammed output voltages in any range…dependent on power needs***…." (Ex.1031, FIG. 4 (below), 6:3-13; *id.*, 6:14-8:14, 9:7-62, 10:56-12:65.)

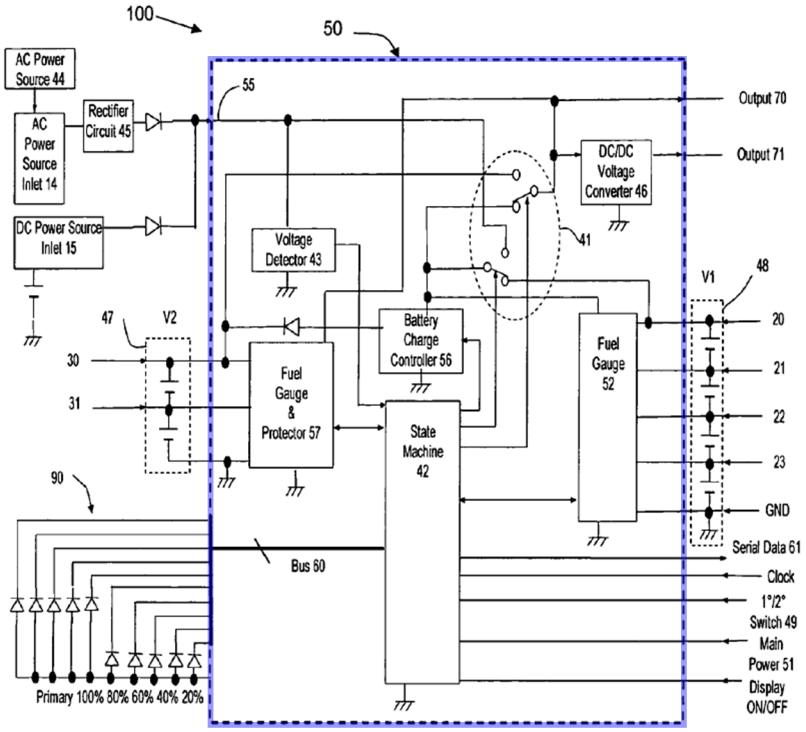

FIG. 4

EMS 50's operations/functions are "controlled by a…programmable state machine 42" in response to information/data from component(s)/detector(s)/gauge(s). (*Id.*, 5:41-6:2.) Thus, state machine 42 controls the voltage regulator's output level "depending on power needs of various equipment." (Ex.1002, ¶¶250-251; Ex.1031, 6:3-8.)

In light of *Masias,* a POSITA would have been motivated and found obvious to modify *Okada-Odendaal-Kook-Calhoon-Black* to include power management features via a voltage regulator circuit coupled to the "DC voltage input" (§IX.A.1(b)) and provides different DC voltages between multiple discrete values to "first drive circuit" (§IX.A.1(d)), where the voltage regulator circuit is coupled to

and controlled by the "**communication and control circuit**"/"**microcontroller**" (§IX.A.1(f)) depending on various device information, *e.g.*, "**received communication of information**" (§IX.A.1(g)) and the "**additional information**" received by the **communication and control circuit** (and its "**microcontroller**") from PDA3 (§IX.A.1(k)), similar to EMS 50 features/techniques taught by *Masias*, to enhance/complement the modified *Okada*'s ability to accommodate, *e.g.*, different voltage levels supplied to devices with respective power requirements. (Ex.1002, ¶252; §§IX.A.1(i)-(l).)

The modified *Okada* system (via, *inter alia*, *Kook*) accounts for mobile devices having different power requirements and regulation/control of the receiver circuitry's output voltage during charging. (§IX.A.1; Ex.1005, ¶¶0057, 0063-0064, 0069-0073; Ex.1059, ¶0041.) A POSITA would have found it obvious to implement such regulator capable of providing different levels of constant voltages to the "**drive circuit**" based on received/determined power requirement/demand of a detected/aligned mobile device. (Ex.1031, 6:5-13; Ex.1002, ¶¶253-254.)

While *Okada-Odendaal-Kook-Calhoon-Black* was capable of adjusting power delivery to PDA3 by selecting switch 21/22/23 and/or adjusting the drive circuit's operating frequency (*see* §IX.A.1(d)), a POSITA would have understood that implementing the above modification based on *Masias*' teachings would have enhanced/complemented *Okada-Odendaal-Kook-Calhoon-Black*. (Ex.1002, ¶¶254-

255) A POSITA would have appreciated that implementing power management circuitry (*e.g.*, including regulator circuit(s)) that receives the "DC voltage input (§IX.A.1(b)) and provides different discrete DC voltages to the "**first drive circuit**" (§IX.A.1(d)) would have improved the modified *Okada* system's flexibility in terms of, *e.g.*, types of external power source(s) that the system may use at the charger. (*Id.*) A POSITA would have recognized *Masias*' EMS 50 receives different sources (*e.g.*, AC, DC (*e.g.*, like that provided by *Okada*), and multiple battery sources), providing a "constant," uninterrupted, and regulated output at different voltage levels based on such source(s), consistent with known voltage regulation technologies/techniques. (*Id.*; Ex.1031, 5:37-13, 6:5-13, 6:48-52, 8:15-22; §IX.A.1.) Thus, a POSITA would have been motivated by *Masias*' teachings of using such a "voltage regulator circuit" (*e.g.*, EMS 50) to provide similar features. (Ex.1002, ¶¶254-256.)

A POSITA would have understood the benefits of implementing power source/management components/circuitry at the input of the modified *Okada* system's first drive circuit because the drive circuit in *Okada* (as modified) drives the primary coil **and** powers (after converting to internal power V_{cc}) primary-side circuitry. (§IX.A.1; Ex.1002, ¶256.) By providing a regulated/constant/uninterrupted power at one of the multiple voltage levels based on device information, *e.g.*, the device power demand in the modified *Okada*

"system" would have enhanced system operations stability while providing flexibility of satisfying different power requirements/demands. (Ex.1002, ¶256.)

A POSITA would have had the skill/rationale in implementing, and expectation of success in achieving, the above-discussed modification. (Ex.1002, ¶257.) Especially give the modification would have involved applying known technologies/techniques noted above, to predictably yield a charging system providing uninterrupted/stable/regulated voltage levels depending on various power demand/requirement of detected mobile device. (*Id.*) *KSR* at 416-18.

D. Ground 4: Claim 8 is obvious over *Okada* in view of *Odendaal*, *Kook, Calhoon, Black*, and *Chen*

1. Claim 8

a) [8]

Okada-Odendaal-Kook-Calhoon-Black in view of *Chen* discloses/suggests this limitation. (Ex.1002, ¶¶259-264; §IX.A.1.)

While *Okada-Odendaal-Kook-Calhoon-Black* does not expressly disclose the high heat conductivity layer features as claimed, a POSITA would have found it obvious to implement such features in view of *Chen*. (Ex.1002, ¶¶259-260.)

Chen, like *Okada-Odendaal-Kook-Calhoon-Black* discloses powering/charging system utilizing inductive windings/coils (Ex.1035, FIG. 1, ¶¶0002, 0035, 0042) and thus is in the same technical field as the '371 patent. (§IX.A.1; Ex.1001, Abstract.) *Chen* discloses features reasonable pertinent to

problem(s) the inventor/'371 patent and a POSITA was trying to solve. (*Id.*; Ex.1035, Abstract, ¶¶0057-058; Ex.1001, 65:39-41; Ex.1002, ¶260.) Therefore, a POSITA had reasons to consider/consult *Chen* when looking to design/implement the above-discussed *Okada-Odendaal-Kook-Calhoon-Black* system. (Ex.1002, ¶261; §IX.A.1.)

Chen discloses multi-layer inductor substrate designs/layers/materials associated with a planar transformer in an inductive power system (Ex.1035, Abstract), including use of thermally-conductive materials to dissipate heat according to known heat sink configurations. (Ex.1002, ¶262; Ex.1035, FIG. 4 (below).)

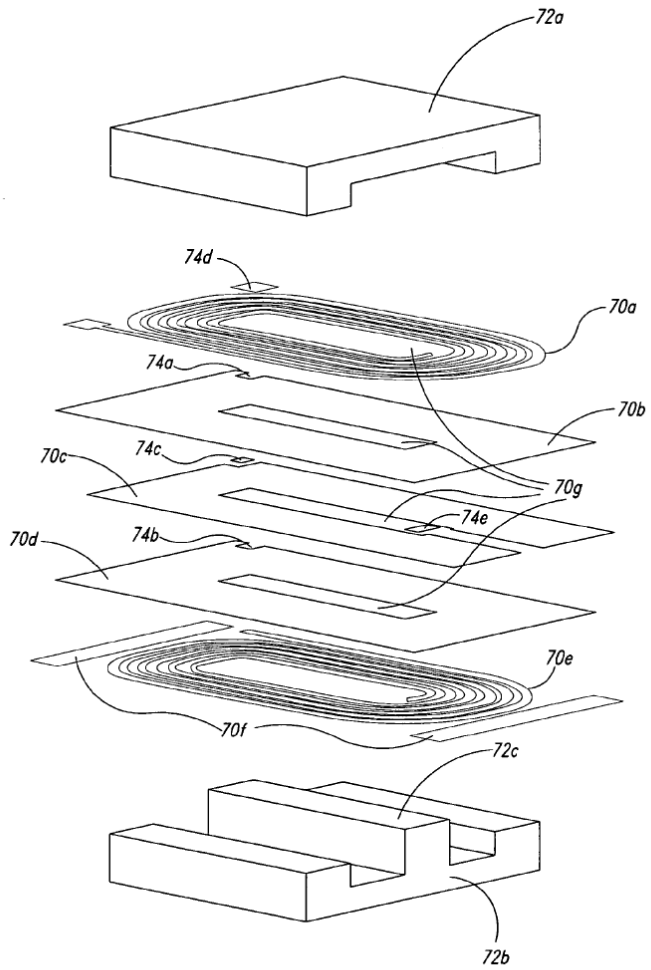

FIG. 4

Transformer T1, configured with multi-layers interconnected through vias forming first/second windings (Ex.1035, FIG. 4, ¶¶0057-0059), where the first/second windings are "electrically and thermally conductive." (*Id.*, ¶0058.) "[M]ounting areas 70f for attaching [T1] to…heat sink 56" (*id.*, ¶0060) is "electrically and **thermally conductive**" (*id.*, ¶¶0058-0060, 0063, 0085). Thus, areas 70f discloses "**a high heat conductivity layer**" that is **"positioned proximate to"** a coil/winding

"**and at least covering an area surrounding the** [the coil/winding] **to disperse any heat generated during provision of power inductively**." (Ex.1002, ¶263.)

A POSITA would have been motivated and found obvious to configure the modified *Okada* (§IX.A.1) to implement known heat sink designs/technologies (*e.g.*, a metallic/thermally conductive layer), as in *Chen*, to remove heat from primary coil 19 during power transfer. (Ex.1002, ¶263.) Heat dissipation was a common design in circuits, especially given inductive circuits typically tend to heat surrounding components (Ex.1042, 5:4-7; Ex.1059, ¶0041), reducing component reliability (Ex.1035, ¶0006). (Ex.1002, ¶263; Ex.1054, ¶¶0021-0022; Ex.1055, ¶0035.) A POSITA would have found it beneficial to implement such a heat conductivity layer to dissipate heat from coil 19 and other components/circuits in *Okada-Odendaal-Kook-Calhoon-Black*. (Ex.1002, ¶263.)

A POSITA would have had the skill/rationale in implementing, and reasonable expectation of success in achieving, such modification. (Ex.1002, ¶264.) Such modification would have involved applying known technologies/techniques (*e.g.,* known use of heat sink material to dissipate heat) to yield the predictable result of providing an inductive charging system with reduced heat damage, consistent with that discussed above by *Chen* and state-of-the-art. (Ex.1002, ¶264.) *KSR* at 416-18.

E. Ground 5: Claim 11 is obvious over *Okada* in view of *Odendaal*, *Kook, Calhoon, Black*, *Kazutoshi*, *Takagi, Masias*

1. Claim 11

a) [11(a)]

Okada-Odendaal-Kook-Calhoon-Black-Kazutoshi discloses/suggests this limitation. (Ex.1002, ¶¶266-267.) As discussed, it would have been obvious to configure the closed-loop feedback process in *Okada-Odendaal-Kook-Calhoon-Black-Kazutoshi* to comprise a PID control technique for regulating the voltage/current at the receiver circuit output. (§§IX.A.1; IX.B.) Modified *Okada* discloses the "apparatus" includes/operates with multiple mobile devices 104 (including "**a first portable device**"), each including PRM40 ("**a first receiver unit**"). (Ex.1005, ¶0119, FIG. 10; *id.*, ¶¶0116, 0121-0122, FIGS. 11(a)-(b); §IX.A.1(a).)

FIG. 10

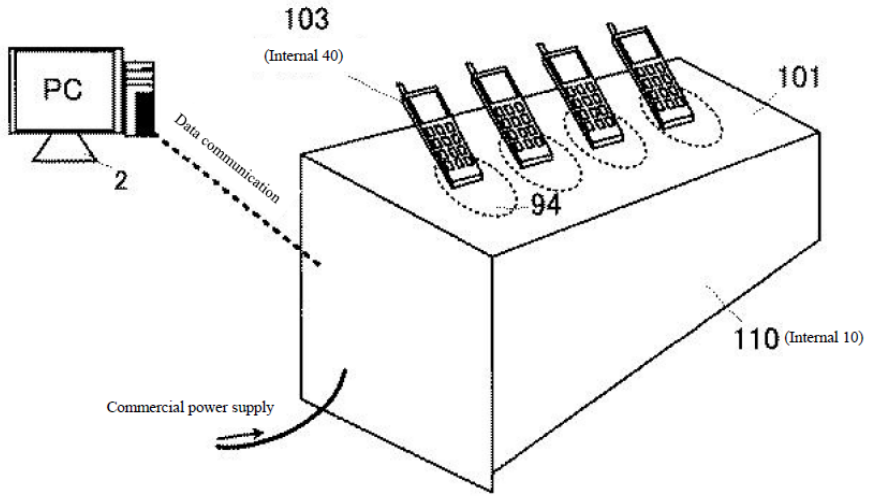

FIG. 11

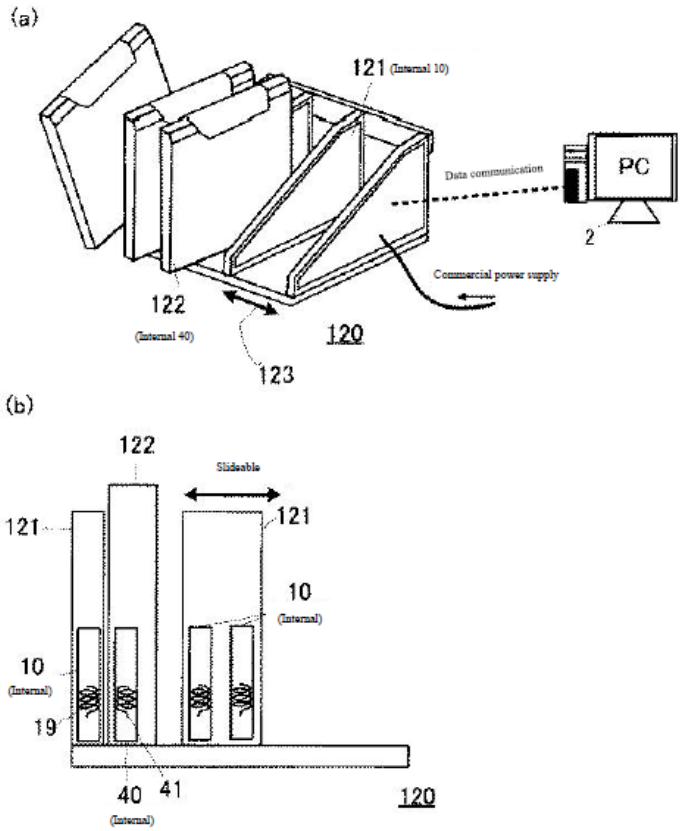

b) [11(b)]

As explained above, and consistent with *Okada*'s teachings, the modified *Okada* apparatus (§IX.A.1) would have been configured to operate with multiple portable devices, including "**a second portable device**." (Ex.1002, ¶268; §§IX.B.1(a).) Moreover, as modified below, it would have been obvious to implement the charger system as a portable device (e.g., "**second portable device**"). (§§IX.E.1(b)-(d).)

c) [11(c)]

Okada-Odendaal-Kook-Calhoon-Black-Kazutoshi in view of *Takagi* discloses/suggests this limitation. (Ex.1002, ¶¶269-274; §§IX.A.1.)

While *Okada-Odendaal-Kook-Calhoon-Black-Kazutoshi* does not expressly disclose that the charging "**system**" is incorporated into a "**second portable device**," a POSITA would have found it obvious to do so in view of *Takagi*. (Ex.1002, ¶270.)

Takagi, like *Okada-Odendaal-Kook-Calhoon-Black-Kazutoshi*, discloses inductive power/signal transfer configurations using coils (Ex.1033, Abstract, FIGS. 1-7, ¶¶0003, 0013-0030, 0041-0078), and thus is in the same technical field as the '371 patent. (§IX.A.1; Ex.1001, Abstract.) *Takagi* discloses features reasonable pertinent to problem(s) the '371 patent inventor and POSITA was trying to solve. (*Id.*; Ex.1033, ¶¶0005-0015; Ex.1001, Abstract, 1:60-3:51; Ex.1002, ¶271.) A POSITA had reasons to consider/consult *Takagi* when looking to design/implement *Okada-Odendaal-Kook-Calhoon-Black-Kazutoshi*. (Ex.1002, ¶271.)

Takagi discloses a **power transmitting/receiving device** 12 including coil 125, power **transmitting** circuit 121, power **receiving** circuit 122, and secondary battery 123. (Ex.1033, FIG. 2 (annotated below), ¶0047.) Such features are applicable to portable systems, e.g., cellular phones. (*Id.*, ¶¶0026, 0030, 0043, 0058, 0065, 0070.)

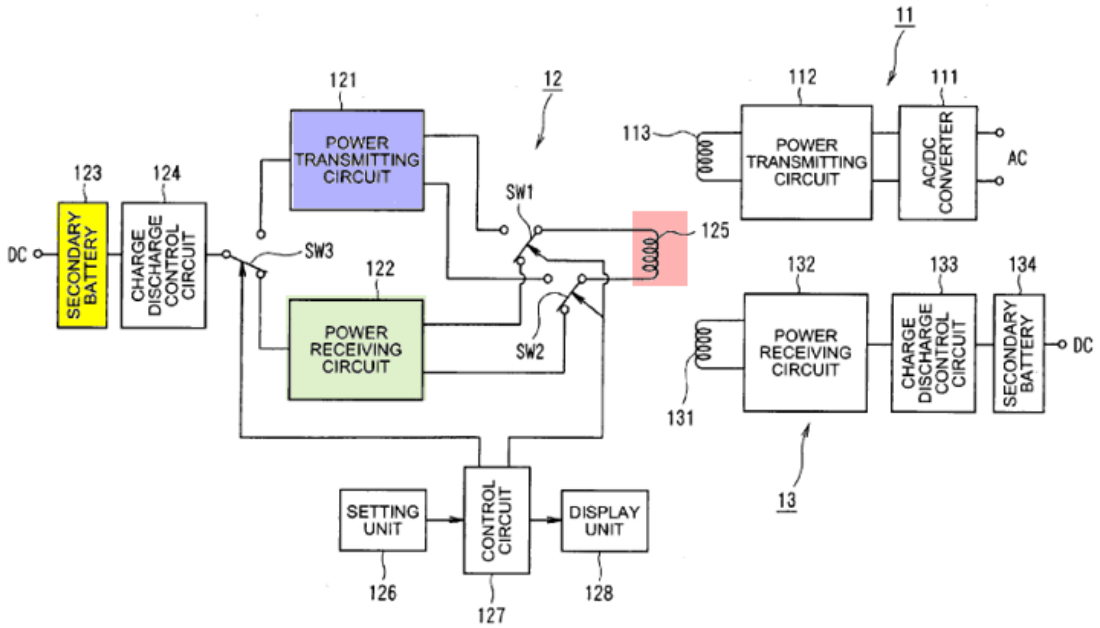

FIG. 2

Transmitting circuit 121 produces an alternating voltage from battery 123, and supplies it to coil 125 for **charging device 13** via coil 131. (*Id.*, ¶¶0048, 0054-0056.) Alternatively, based on switch SW1/SW2 settings, power receiving circuity 122 in device 12 may also **receive power from device 11** via coils 125/113 for recharging battery 123. (*Id.*, ¶¶0048-0053, 0057-0072.) When coil 113 approaches coil 125 (and based on switch SW1-SW2 settings), power receiving circuit 122 receives power from device 11 (via the magnetic coupling between coils 125 and 113) to charge battery 123. (*Id.*, ¶0048, 0052-0053, 0069-0072; *id.*, 0057-0068.) (Ex.1002, ¶272.)

A POSITA would have been motivated, and found obvious, to configure the modified *Okada* system to be a portable device (*e.g.,* "**second portable device**") to

enhance the versatility of *Okada*'s apparatus, including providing mobility complimenting the mobile nature of the portable device(s) (PDA3) the charger system is designed to power/charge. (Ex.1002, ¶273.) As explained below (§IX.E.1(d)), implementing a rechargeable battery with such a mobile charger (similar to *Takagi*) would have facilitated such mobile charging features. (Ex.1002, ¶273; §IX.E.1(d).) A POSITA would have appreciated such a modification would have allowed the portable device to power/charge other devices (while also being capable of being recharged itself), thus expanding the device's functionalities, as taught/suggested by *Takagi*. (Ex.1002, ¶273.)

A POSITA would have had the skill/rationale in implementing, and reasonable expectation of success in achieving, such modification, especially since it was known to provide devices both powering other devices and receiving power for charging an internal battery. (*See supra* regarding *Takagi*; Ex.1002, ¶274; Ex.1043, 4:34-55, FIG. 3, 5:23-25.) Such modification would have involved applying known technologies/techniques (multi-function portable power transfer device using known inductive power components (*Okada*, *Takagi*) to yield the predictable result of providing a versatile/portable device inductively charging/powering another portable device having a battery, consistent with that discussed above by *Takagi* and *Okada-Odendaal-Kook-Calhoon-Black-Kazutoshi*. (§IX.A.1). *KSR* at 416-18.

d) [11(d)]

(1) [11(d)(1)]

Okada-Odendaal-Kook-Calhoon-Black-Kazutoshi-Takagi in view of *Masias* discloses/suggests this limitation. (Ex.1002, ¶¶275-279.) As discussed, it was obvious to configure the charger system in the modified *Okada* apparatus as a "**second portable device**." (§§IX.E.1(a)-(c).) Consistent with that above (§IX.E.1(c)), a POSITA would have been motivated and found obvious, to implement such features by configuring such a system with a rechargeable battery that provides a source of DC power that PTM10 (as modified) uses to facilitate the power/charge operations consistent with discussed in claim 1, while also being capable of being recharged itself. (§§IX.A.1; Ex.1002, ¶276.)

While modified *Okada* does not expressly disclose use of a "**DC-to-DC voltage converter to provide power to the system**" to "**inductively power the first receiver unit of the first portable device and charge the battery of the first portable device**," a POSITA would have found it obvious to implement such features in view of *Masias*. (Ex.1002, ¶277.)

Similar to as explained in Ground 3 (§IX.C), a POSITA would have been motivated to consider the teachings of *Masias* and found it obvious to modify *Okada*'s "**system**" in view of *Masias* to include power management features via a voltage regulator circuit that is coupled to a **DC voltage *input*** (*e.g.*, circuits 13-14

of PTM10) and provides **different DC *output*** voltages between multiple discrete values to power the drive circuit for powering/charging purposes. (Ex.1031, 6:3-13; §IX.C.1.) A POSITA would have been motivated and understood that such a modification would have thus predictably resulted in the modified *Okada* "**system**" to include a "**DC-to-DC voltage converter** to provide power to the system to inductively power" other devices/batteries. (*Id.*) A POSITA would have been motivated, and found obvious, to include a DC to DC voltage converter in the "**system**" incorporated in the "**second portable device**" as it would have provided various benefits, *e.g.*, allowing the portable device to enhance/complement the system/device's ability to accommodate different levels of voltages supplied to different mobile devices' based respective power requirements. (§IX.C.1; Ex.1002, ¶278.)

Moreover, for reasons above and those explained for limitation 11(c) and claim 1, a POSITA would have been motivated, and found obvious to configured the portable charger system (in view of *Takagi* and *Masias*) to use the internal battery power and DC/DC converter features above to power the "first receiver unit" of PDA3 (§IX.A.1(b)) and charge its battery, consistent with the teachings of *Okada* as modified in light of *Odendaal-Kook-Calhoon-Black-Kazutoshi-Takagi-Masias*. (§§IX.A.1, IX.E.1(a)-(c); Ex.1002, ¶279.) A POSITA would have had similar skill,

rationale, and expectation of success to implement such a modification in the portable charger system as that explained above for those combination(s). (*Id.*)

(2) [11(d)(2)]

The *Okada-Odendaal-Kook-Calhoon-Black-Kazutoshi-Takagi-Masias* combination discloses/suggests this limitation. (Ex.1002, ¶¶280-282; §§IX.E.1(a)-(d)(1).) As explained, it would have been obvious to configure the charger system in the modified *Okada* apparatus to be portable ("**second portable device**") and have a rechargeable battery ("**internal rechargeable battery**"). (§IX.E.1(b)-(d)(1).) For similar reasons, motivations, and teachings/suggestions from *Takagi* in context of *Okada*, a POSITA would have found it obvious to configure the modified portable charging system to include receiver circuitry ("**second receiver unit**") that receives power inductively via coil 19 (§IX.A.1(c) ("**first primary coil**")) to facilitate wireless recharging of the portable charger system's battery. (Ex.1002, ¶281.) A POSITA would have appreciated the benefits of inductive recharging of a portable charging system's battery based on the guidance in *Takagi*, which discloses a "power receiving circuit" in a dual-function portable charger (that can both inductive receive and transmit power) for charging an battery 123 and the battery of another portable device 134. (Ex.1033, FIG. 2 (below), ¶¶0026, 0043, 0047-0072; §IX.E.1(c)-(d)(1); Ex.1002, ¶281.)

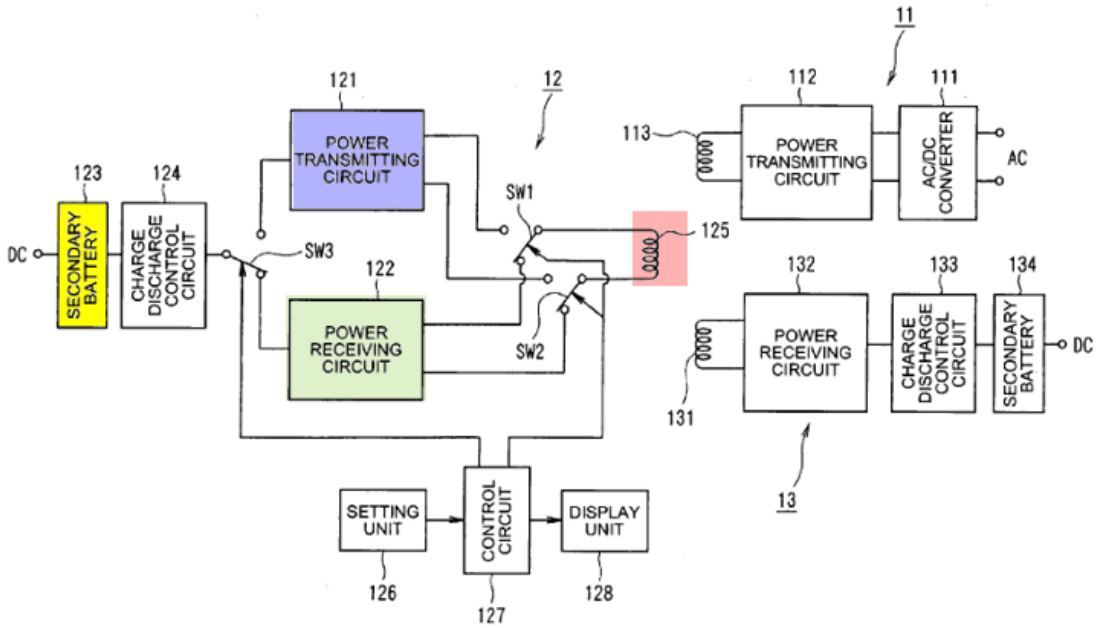

FIG. 2

A POSITA would have appreciated such recharging features would have expanded the applications of *Okada*'s charging system (as implemented in the above-modified apparatus (§§IX.A.1; IX.E.1(a)-(d)(1)), thus predictably providing a mobile charger that was capable of maintaining charging operations (for other device) while likewise advantageously being capable of having its internal DC power source (battery) inductively recharged without wires. (Ex.1002, ¶282; Ex.1005, ¶¶0001-0008; Ex.1033, ¶¶0003-0030.) A POSITA would have had similar skill/rationale, and expectation of success to implement such a modification in the portable charger system as that explained above. (*Id.*)

(3) [11(d)(3)]

Okada-Odendaal-Kook-Calhoon-Black-Kazutoshi-Takagi-Masias discloses/suggests this limitation. (Ex.1002, ¶¶283-286.) For similar reasons explained above (§§IX.E.1(c)-(d)(2) and *Takagi*, it would have been obvious to modify the portable charger system ("second portable device") to both inductively charge other device(s) (e.g., PDA3 ("first portable device")) and inductively charge its internal battery via coil 19 and "[second] receiver circuitry" implemented in the portable charger system. (§IX.E.1(d)(1)-(2); Ex.1002, ¶284.)

Consistent with the teachings of *Takagi*, a POSITA would have likewise been motivated to implement such features by configuring the "**communication and control circuit**" (§IX.A.1(f)) to include features/circuitry that controls when/how the portable charger operates as a charger for another device, or a recipient of inductive power for recharging its internal battery. Charge/discharge control circuit 124 monitors battery 123's remaining charge. (Ex.1033, FIG. 2 (below), ¶¶0076-0077; Ex.1002, ¶285.)

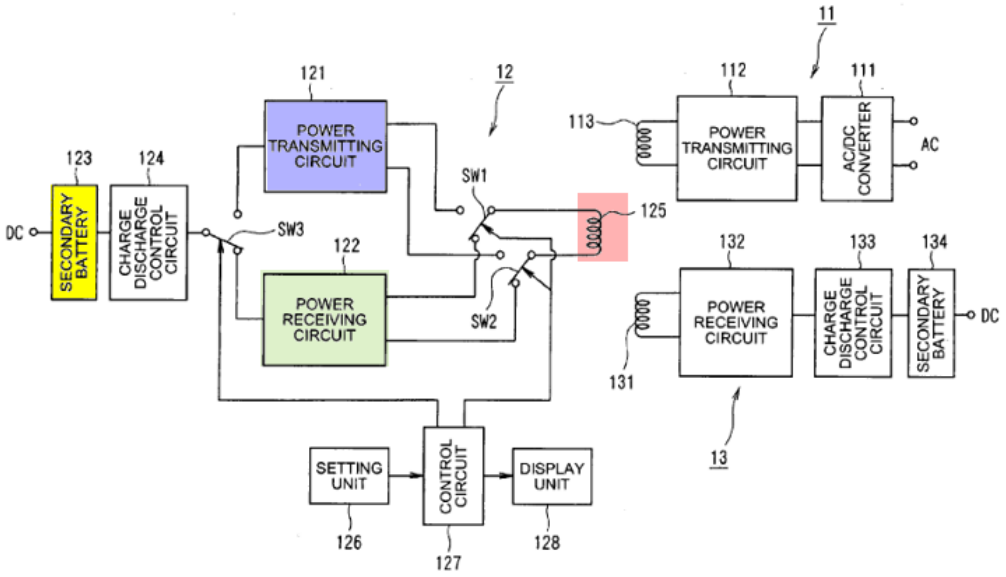

FIG. 2

Thus, for similar reasons explained, a POSITA would have had similar reasons to consider such teachings, and had similar skills and expectation of success in implementing similar features (*supra*) in the portable charger system. (§§IX.E.1(c)-(d)(2); Ex.1002, ¶286.) For example, a POSITA would have been motivate to configure the portable charger's systems communication/control circuitry to include features/circuitry to monitor its internal battery status to determine whether to receive power (to recharge the battery) or whether sufficient power remains to allow charging another device. (Ex.1002, ¶286.) *See KSR* at 416-18.

F. Ground 6: Claim 12 is obvious over *Okada* in view of *Odendaal*, *Kook, Calhoon, Black*, and *Labrou*

1. Claim 12

a) [12]

The *Okada-Odendaal-Kook-Calhoon-Black* combination in view of *Labrou* discloses/suggests this limitation. (Ex.1002, ¶¶287-295; §IX.A.1.)

In addition to the teachings noted above in §IX.A.1(c), *Kook* describes use of a primary coil 70 that can be "composed of any one of…coil and ferrite core…and formed in a flat…shape…to facilitate the signal transmission." (Ex.1059, ¶0076, *id.* ¶¶0009, 0012, 0033, 0041-42.) In light of such teachings/suggestions (*Odendaal-Kook* in context of a POSITA's state-of-art knowledge (§IX.A.1(c)), it would have been obvious to configure the planar primary coil 19 in the modified *Okada* system to have a central ferrite core/area ("**a magnetic core of ferromagnetic material within a central area of the first primary coil**") to improve the charging efficiency, as known in the art. (Ex.1002, ¶¶288-289; Ex.1061, 18:20-24 ("tailoring a thickness of a desired ferrite and a thickness and a width of a wire, a charging device having a high charging efficiency can be obtained.").)

A POSITA would have had the skills/knowledge to configure, and expectation of success in achieving, the above-modification, especially given the use/benefits of a ferrite core/material in planar coils was known. (Ex.1002, ¶290; Ex.1059, ¶0009; Ex.1061, 17:10-23:13, FIG. 11.) As such, a POSITA had the motivation/skills and

reasonable expectation of success to configure/achieve the above-modification, especially in light of *Kook-Odendaal* and a POSITA's knowledge concerning use of ferrite material to enhance energy transfer efficiency. (Ex.1002, ¶290.) *KSR* at 416-18

Moreover, while the *Okada-Odendaal-Kook-Calhoon-Black* combination does not disclose the "apparatus" using NFC technologies/techniques to communicate data,[12] a POSITA would have found it obvious to do so in view of *Labrou*. (Ex.1002, ¶291.)

Labrou, like *Okada-Odendaal-Kook-Calhoon-Black* discloses mobile devices having wireless communication capability in the same technical field as the '371 patent and also features reasonable pertinent to problem(s) the inventor/'371 patent and a POSITA were trying to solve. (§IX.A.1; Ex.1001, 11:64-12:4, 39:52-62; Ex.1062, ¶¶0009, 0185; Ex.1002, ¶292.) Therefore, a POSITA had reasons to consider/consult *Labrou* in context of *Okada-Odendaal-Kook-Calhoon-Black*. (Ex.1002, ¶292.)

Labrou discloses an NFC chip coupled to and part of the circuitry of a mobile device 104. (Ex.1062, ¶0185, FIG. 1.) Mobile device 104 may use an NFC signal

[12] Claim 12 thus encompasses such NFC features in the portable device (part of the "apparatus").

in applications involving POS transactions for authentication/approval purposes. (*Id.*, ¶¶0022-0026, 0185 (mobile device NFC functionalities to send confirmation to POS).) A POSITA would have understood that such NFC chip necessarily includes "**antenna and circuitry for communication of data**" given it communicates with an RFID reader at the POS, otherwise, such wireless communications would not occur as disclosed. (*Id.*, ¶0185; Ex.1002, ¶293.)

Given such guidance, a POSITA would have been motivated and found it obvious to implement known NFC technologies/functionalities/antenna/circuitry, like *Labrou* in *e.g.*, PDA3 ("portable device"—part of the "**apparatus**") to provide known near-field communication functionalities/techniques for communicating data according to certain applications known to be used with mobile devices, consistent with features taught by *Okada-Labrou.* (Ex.1002, ¶294.)

A POSITA would have had the skill and rationale to configure, and reasonable expectation of success in achieving, such modification. (Ex.1002, ¶295.) Especially given it was known to employ NFC chip(s)/antenna/circuitry with mobile devices (*Labrou*) to provide the benefits of such near-field communications (*e.g.*, POS transactions, etc.) (Ex.1002, ¶¶295-297.) *KSR* at 416-18.

X. DISCRETIONARY DENIAL IS NOT APPROPRIATE

Discretionary denial under Section 325(d) is not appropriate here given the prior art combinations/arguments raised during prosecution are not the same/substantially similar to the presented grounds. For instance, the Office did not consider *Okada* in light of the other asserted prior art herein. (Ex.1004; Ex.1001, Cover.) *Okada* discloses/suggests many of the claimed features, and thus is relevant to the patentability of the challenged claim(s), especially when considered in context of the asserted obviousness positions. (§IX.) The examiner also did not have the benefit of expert testimony to support such teachings/suggestions as presented here. (Ex.1002.) The examiner erred in allowing the claims without considering teachings/suggestions in prior art asserted here (*see* §IX). (Ex.1004, 729-737.) Had the examiner done so, the challenged claims would have likely not have issued.[13]

This is true despite the issued patent from *Calhoon* (Ex.1041) (and other patent references by "Calhoon") and a Korean version (KR-100836634) of *Kook* (Ex.1059) were cited during prosecution. (Ex.1001, Cover (pp.2-4); Exs.1004, 1059.) As with other references, the examiner erred in a manner pertinent to the patentability of the challenged claims by failing to consider and apply the similar

[13] Petitioner reserves the right to seek leave to respond to any §325(d) (and §314) arguments PO may raise to avoid institution.

teachings by each of *Calhoon* and *Kook* alone or in combination with other prior art. *Calhoon* and *Kook* at least disclose features in limitations 1(i) and 1(d), respectively, and thus should have been considered in combination with other pertinent references (*Okada*). (§IX.A.)

Evaluation of the factors under *Apple Inc. v. Fintiv, Inc.*, IPR2020-00019, Paper 11 (Mar. 20, 2020) (precedential) favors institution.

The **first factor** (stay) is neutral, because Samsung has not yet moved for a stay. *See Hulu LLC v. SITO Mobile R&D IP, LLC et al.*, IPR2021-00298, Paper 11 at 10-11 (P.T.A.B. May 19, 2021).

The **second factor** (proximity) is neutral. "The PTAB will weigh this factor against exercising discretion to deny institution under *Fintiv* if the median time-to-trial is around the same time or after the projected statutory deadline for the PTAB's final written decision" (FWD). (Ex.1051, 9.) The median time from filing to trial in the Eastern District of Texas is 19 months, meaning trial will be *no earlier* than May 2024 (Ex.1052, 35), is close to the court's scheduled jury selection for August 5, 2024 (Ex.1053, 1.) With this petition filed in June 2023, a FWD may be expected by December 2024, not long after the trial date.

That the FWD may come after the trial date is not dispositive. The Board has granted institution in cases where the FWD issued months after the scheduled trial date. The Board has relied on various justifications, such as diligence in filing the

petition, a stipulation not to pursue the asserted grounds in litigation, minimal investment in litigation, and the merits of the invalidity challenge were strong. *Verizon Business Network Services, Inc. v. Huawei Techs. Co*., IPR2020-01141, Paper 12 (Jan. 14, 2021). The same factors are present here as Petitioner diligently filed this petition (challenging long, convoluted claims) in advance of the one-year bar date and within four months of PO's infringement contentions in the Texas Litigation. (Exs.1018, 1022.) Fact discovery is not anticipated to close until March 18, 2024. (Ex.1053, 3.) Expert discovery has not yet started. (*Id.*) The *Markman* hearing is scheduled for February 6, 2024. (*Id.*)

The **third factor** (investment) also weighs against denial. The district court case is in the early stages. Fact discovery is in its infancy and the parties have not engaged in expert discovery. (Ex.1053, 3.) The parties have not yet identified terms for construction. (*Id.*, 4-6.) Nor have there been any substantive orders in this case.

The **fourth factor** (overlap) also weighs against denial. Petitioner hereby stipulates that, if the IPR is instituted, Petitioner will not pursue the IPR grounds in the district court litigation. Thus, "[i]nstituting trial here serves overall system efficiency and integrity goals by not duplicating efforts and by resolving materially different patentability issues." *Apple, Inc. v. SEVEN Networks, LLC*, IPR2020-00156, Paper 10 at 19 (P.T.A.B. June 15, 2020); *see also Sand Revolution II, LLC v.*

Continental Intermodal Group-Trucking LLC, IPR2019-01393, Paper 24 at 12 (P.T.A.B. June 16, 2020).

While the **fifth factor** (parties) may weigh slightly in favor of denial, because the Petitioner and PO are the same parties as in district court, based on a "holistic view," the factors favor institution. *Samsung Elecs. Co. Ltd. v. Dynamics Inc.*, IPR2020-00505, Paper 11 at 15 (P.T.A.B. Aug. 12, 2020).

Indeed, this petition presents compelling merits. *See Commscope Tech. LLC v. Dali Wireless, Inc.*, IPR2022-01242, Paper 23 at 4-5 (P.T.A.B. Feb. 27, 2023) (precedential). The asserted combination of multiple prior art teachings highlight the claimed compilation of known/conventional technologies/techniques. *In re Gorman*, 933 F.2d at 986. (§IX) Moreover, this Petition is the ***sole*** challenge to the identified challenged claims before the Board—a "crucial fact" favoring institution. *Google LLC v. Uniloc 2017 LLC*, IPR2020-00115, Paper 10 at 6 (May 12, 2020).

XI. CONCLUSION

Accordingly, Petitioner requests institution of IPR for the challenged claims.

Respectfully submitted,

Dated: June 30, 2023

By: /Joseph E. Palys/
Joseph E. Palys (Reg. No. 46,508)
Counsel for Petitioner

XII. APPENDIX A (CLAIM LISTING)[14]

Claim 1

[1(a)] An apparatus comprising:

[1(b)] a system for providing power inductively to a portable device comprising a battery and an inductive receiver unit including a receiver coil and a receiver circuit, the system comprising:

[1(c)] a first primary coil that is substantially planar and substantially parallel to a surface of the system for providing power inductively to the portable device;

[1(d)]

[1(d)(1)] a first drive circuit, including a FET driver, a capacitor, and a FET switch, coupled to a DC voltage input and coupled to the first primary coil,

[1(d)(2)] wherein during operation the first drive circuit is configured to apply an alternating electrical current to the first primary coil at an operating frequency and duty cycle to generate an alternating

[14] 37 C.F.R. 42.24(1) ("The word count…does not include…[an] appendix of exhibits or claim listing.")

magnetic field in a direction substantially perpendicular to the plane of the first primary coil and the surface of the system to provide power inductively to the portable device,

[1(d)(3)] wherein the operating frequency is within a range of frequencies (i) that are near a resonance frequency of a circuit comprising the first primary coil and the capacitor, (ii) such that increasing values of the operating frequency within the range of frequencies would correspond to a lower voltage or current induced in an output of the receiver circuit and (iii) that allow activation and powering of the receiver unit and charging the battery of the portable device;

[1(e)] a first sense circuit to monitor current flow through the first primary coil during operation of the first drive circuit, wherein the first sense circuit includes a low pass filter and an amplifier to assist in detecting and amplifying a signal corresponding to a current modulation in the first primary coil induced by modulation of current in the receiver coil; and

[1(f)] a communication and control circuit, including a microcontroller coupled to the first drive circuit and the first sense circuit, configured to:

[1(g)] detect, through the first sense circuit, a received communication of information in the current modulation in the first primary coil;

[1(h)] operate the first drive circuit to inductively transfer power from the first primary coil to the receiver coil to activate and power the receiver unit to enable the receiver circuit to communicate the information detected in the current modulation in the first primary coil, wherein the communication of information includes information to enable the communication and control circuit to configure the inductive transfer of power to the portable device,

[1(i)] wherein the received communication of information includes: information corresponding to a voltage or current induced by the first primary coil at the output of the receiver circuit; a unique identification code; a manufacturer code; a charge algorithm profile; and a power requirement; and

[1(j)] operate the first drive circuit according to the power requirement and charge algorithm profile to provide the power from the first primary coil to the receiver coil to power the receiver unit and charge the battery of the portable device,

[1(k)] wherein to charge the battery of the portable device the communication and control circuit is further configured to: receive additional information in the current modulation in the first primary coil from the modulation of the current in the receiver coil corresponding to the voltage or current at the output of the receiver circuit while charging the battery of the portable device;

[1(l)] regulate in a closed loop feedback manner the voltage or current at the output of the receiver circuit in accordance with the received additional information corresponding to the voltage or current at the output of the receiver circuit by adjusting at least one of the operating frequency and the duty cycle of the first drive circuit while charging the battery of the portable device;

[1(m)] monitor for continued presence of the portable device and completion of the charging of the battery of the portable device based on the communication from the receiver circuit and detected by the communication and control circuit through the first sense circuit; and

[1(n)] if the portable device is no longer present or charging is complete, stop operation of the first drive circuit for the provision of power inductively to the portable device.

Claim 2

[2] The apparatus of claim 1, wherein the closed loop feedback manner comprises a Proportional-Integral-Derivative (PID) control technique for regulating the voltage or current at the output of the receiver circuit.

Claim 3

[3] The apparatus of claim 1, wherein the DC voltage input is configured to receive a DC voltage and the system further comprises: a voltage regulator circuit coupled to the DC voltage input and to the microcontroller, wherein the microcontroller is configured to control the voltage regulator circuit to switch a level of the DC voltage between multiple discrete values based on the received communication of information and the additional information received by the communication and control circuit from the portable device.

Claim 4

[4] The apparatus of claim 1 wherein: the DC voltage input is configured to connect to and receive a DC voltage from a DC power supply via a universal serial bus (USB); and the communication and control circuit is further configured to communicate with the DC power supply via the USB.

Claim 8

[8] The apparatus of claim 1, wherein the system further comprises a high heat conductivity layer positioned proximate to the first primary coil and at least covering an area surrounding the first primary coil to disperse any heat generated during provision of power inductively.

Claim 11

[11(a)] The apparatus of claim 1, wherein the closed loop feedback manner comprises a Proportional-Integral-Derivative (PID) control technique for regulating the voltage or current at the output of the receiver circuit, the portable device is a first portable device, and the receiver unit of the first portable device is a first receiver unit, the apparatus further comprises:

[11(b)] a second portable device;

[11(c)] the system is incorporated into the second portable device; and

[11(d)] the second portable device further comprises:

[11(d)(1)] an internal, rechargeable battery and a DC-to-DC voltage converter to provide power to the system to inductively power the first receiver unit of the first portable device and charge the battery of the first portable device;

[11(d)(2)] a second receiver unit coupled to the first primary coil to enable the internal, rechargeable battery to be recharged inductively through the first primary coil; and

[11(d)(3)] the communication and control circuit is further configured to control whether the second portable device is receiving power inductively or charging the first portable device inductively.

Claim 12

[12] The apparatus of claim 1 wherein the first primary coil includes a magnetic core of ferromagnetic material within a central area of the first primary coil and the apparatus further comprises a Near Field Communication (NFC) antenna and circuitry for communication of data.

CERTIFICATE OF COMPLIANCE

Pursuant to 37 C.F.R. § 42.24(d), the undersigned certifies that the foregoing Petition for *Inter Partes* Review of U.S. Patent No. 11,316,371 contains, as measured by the word-processing system used to prepare this paper, 13,988 words. This word count does not include the items excluded by 37 C.F.R. § 42.24 as not counting towards the word limit.

Respectfully submitted,

Dated: June 30, 2023

By: /Joseph E. Palys/
Joseph E. Palys (Reg. No. 46,508)
Counsel for Petitioner

CERTIFICATE OF SERVICE

I hereby certify that on June 30, 2023, I caused a true and correct copy of the foregoing Petition for *Inter Partes* Review of U.S. Patent No. 11,316,371 and supporting exhibits to be served via express mail on the Patent Owner at the following correspondence address of record as listed on PAIR:

115007 – NK Patent Law
4101 Lake Boone Trail
Suite 218
Raleigh, NC 27607

By: /Joseph E. Palys/
Joseph E. Palys (Reg. No. 46,508)